Silicon Carbide (SiC) MOSFET – EliteSiC, 29 mohm, 1200 V, M3S, D2PAK-7L
NTBG030N120M3S

$V_{(BR)DSS}$	$R_{DS(ON)}$ MAX	I_D MAX
1200 V	39 mΩ @ 18 V	77 A

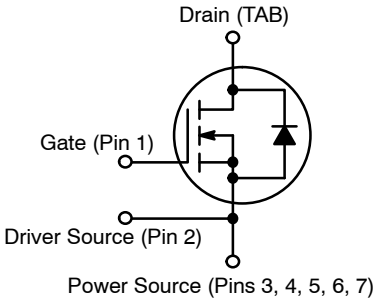

N−CHANNEL MOSFET

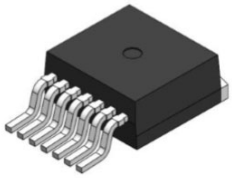

D2PAK−7L
CASE 418BJ

Features

- Typ. $R_{DS(on)}$ = 29 mΩ @ V_{GS} = 18 V
- Ultra Low Gate Charge ($Q_{G(tot)}$ = 107 nC)
- High Speed Switching with Low Capacitance (C_{oss} = 106 pF)
- 100% Avalanche Tested
- This Device is Halide Free and RoHS Compliant with exemption 7a, Pb−Free 2LI (on second level interconnection)

Typical Applications

- Solar Inverters
- Electric Vehicle Charging Stations
- UPS (Uninterruptible Power Supplies)
- Energy Storage Systems
- SMPS (Switch Mode Power Supplies)

MAXIMUM RATINGS (T_J = 25°C unless otherwise noted)

Parameter			Symbol	Value	Unit
Drain−to−Source Voltage			V_{DSS}	1200	V
Gate−to−Source Voltage			V_{GS}	−10/+22	V
Continuous Drain Current (Notes 2, 3)	Steady State	T_C = 25°C	I_D	77	A
Power Dissipation (Note 2)			P_D	348	W
Continuous Drain Current (Notes 2, 3)	Steady State	T_C = 100°C	I_D	54	A
Power Dissipation (Note 2)			P_D	174	W
Pulsed Drain Current (Note 4)	T_C = 25°C		I_{DM}	207	A
Operating Junction and Storage Temperature Range			T_J, T_{stg}	−55 to +175	°C
Source Current (Body Diode) T_C = 25°C, V_{GS} = −3 V (Note 2)			I_S	68	A
Single Pulse Drain−to−Source Avalanche Energy ($I_{L(pk)}$ = 21 A, L = 1 mH) (Note 5)			E_{AS}	220	mJ
Maximum Temperature for Soldering (10 s)			T_L	270	°C

Stresses exceeding those listed in the Maximum Ratings table may damage the device. If any of these limits are exceeded, device functionality should not be assumed, damage may occur and reliability may be affected.

1. Surface mounted on a FR−4 board using1 in^2 pad of 2 oz copper.
2. The entire application environment impacts the thermal resistance values shown, they are not constants and are only valid for the particular conditions noted.
3. The maximum current rating is based on typical RDS(on) performance.
4. Repetitive rating, limited by max junction temperature.
5. E_{AS} of 220 mJ is based on starting T_J = 25°C; L = 1 mH, I_{AS} = 21 A, V_{DD} = 100 V, V_{GS} = 18 V.

MARKING DIAGRAM

BG030N120M3S = Specific Device Code
A = Assembly Location
Y = Year
WW = Work Week
ZZ = Lot Traceability

ORDERING INFORMATION

Device	Package	Shipping†
NTBG030N120M3S	D2PAK−7L	800 / Tape & Reel

†For information on tape and reel specifications, including part orientation and tape sizes, please refer to our Tape and Reel Packaging Specification Brochure, BRD8011/D.

© Semiconductor Components Industries, LLC, 2022

THERMAL CHARACTERISTICS

Parameter	Symbol	Max	Unit
Junction−to−Case − Steady State (Note 2)	$R_{\theta JC}$	0.43	°C/W
Junction−to−Ambient − Steady State (Notes 1, 2)	$R_{\theta JA}$	40	

RECOMMENDED OPERATING CONDITIONS

Parameter	Symbol	Value	Unit
Operation Values of Gate−to−Source Voltage	V_{GSop}	−5…−3 +18	V

Functional operation above the stresses listed in the Recommended Operating Ranges is not implied. Extended exposure to stresses beyond the Recommended Operating Ranges limits may affect device reliability.

ELECTRICAL CHARACTERISTICS (T_J = 25°C unless otherwise specified)

Parameter	Symbol	Test Condition	Min	Typ	Max	Unit
OFF−STATE CHARACTERISTICS						
Drain−to−Source Breakdown Voltage	$V_{(BR)DSS}$	V_{GS} = 0 V, I_D = 1 mA	1200	–	–	V
Drain−to−Source Breakdown Voltage Temperature Coefficient	$V_{(BR)DSS}/T_J$	I_D = 1 mA, referenced to 25°C (Note 7)	–	0.3	–	V/°C
Zero Gate Voltage Drain Current	I_{DSS}	V_{GS} = 0 V, V_{DS} = 1200 V	–	–	100	μA
Gate−to−Source Leakage Current	I_{GSS}	V_{GS} = +22/−10 V, V_{DS} = 0 V	–	–	±1	μA
ON−STATE CHARACTERISTICS						
Gate Threshold Voltage	$V_{GS(TH)}$	V_{GS} = V_{DS}, I_D = 15 mA	2.04	2.4	4.4	V
Drain−to−Source On Resistance	$R_{DS(on)}$	V_{GS} = 18 V, I_D = 30 A, T_J = 25°C	–	29	39	mΩ
		V_{GS} = 18 V, I_D = 30 A, T_J = 175°C (Note 7)	–	58	–	
Forward Transconductance	g_{FS}	V_{DS} = 10 V, I_D = 30 A (Note 7)	–	30	–	S
CHARGES, CAPACITANCES & GATE RESISTANCE						
Input Capacitance	C_{ISS}	V_{GS} = 0 V, f = 1 MHz, V_{DS} = 800 V	–	2430	–	pF
Output Capacitance	C_{OSS}		–	106	–	
Reverse Transfer Capacitance	C_{RSS}		–	9.4	–	
Total Gate Charge	$Q_{G(TOT)}$	V_{GS} = −3/18 V, V_{DS} = 800 V, I_D = 30 A	–	107	–	nC
Threshold Gate Charge	$Q_{G(TH)}$		–	6	–	
Gate−to−Source Charge	Q_{GS}		–	17	–	
Gate−to−Drain Charge	Q_{GD}		–	28	–	
Gate−Resistance	R_G	f = 1 MHz	–	3.4	–	Ω
SWITCHING CHARACTERISTICS						
Turn−On Delay Time	$t_{d(ON)}$	V_{GS} = −3/18 V, V_{DS} = 800 V, I_D = 30 A, R_G = 4.7 Ω inductive load (Notes 6, 7)	–	16	–	ns
Rise Time	t_r		–	20	–	
Turn−Off Delay Time	$t_{d(OFF)}$		–	48	–	
Fall Time	t_f		–	11	–	
Turn−On Switching Loss	E_{ON}		–	310	–	μJ
Turn−Off Switching Loss	E_{OFF}		–	138	–	
Total Switching Loss	E_{tot}		–	448	–	

Share Feedback
Your Opinion Matters

ELECTRICAL CHARACTERISTICS (T_J = 25°C unless otherwise specified) (continued)

Parameter	Symbol	Test Condition	Min	Typ	Max	Unit
SOURCE−DRAIN DIODE CHARACTERISTICS						
Continuous Source−Drain Diode Forward Current (Note 2)	I_{SD}	V_{GS} = −3 V, T_C = 25°C (Note 7)	–	–	68	A
Pulsed Source−Drain Diode Forward Current (Note 4)	I_{SDM}		–	–	207	
Forward Diode Voltage	V_{SD}	V_{GS} = −3 V, I_{SD} = 30 A, T_J = 25°C	–	4.6	–	V
Reverse Recovery Time	t_{RR}	V_{GS} = −3/18 V, I_{SD} = 30 A, dI_S/dt = 1000 A/μs, V_{DS} = 800 V (Note 7)	–	19	–	ns
Reverse Recovery Charge	Q_{RR}		–	111	–	nC
Reverse Recovery Energy	E_{REC}		–	10	–	μJ
Peak Reverse Recovery Current	I_{RRM}		–	11	–	A
Charge time	t_A		–	11	–	ns
Discharge time	t_B		–	8.2	–	ns

Product parametric performance is indicated in the Electrical Characteristics for the listed test conditions, unless otherwise noted. Product performance may not be indicated by the Electrical Characteristics if operated under different conditions.

6. E_{ON}/E_{OFF} result is with body diode
7. Defined by design, not subject to production test.

Share Feedback
Your Opinion Matters

TYPICAL CHARACTERISTICS

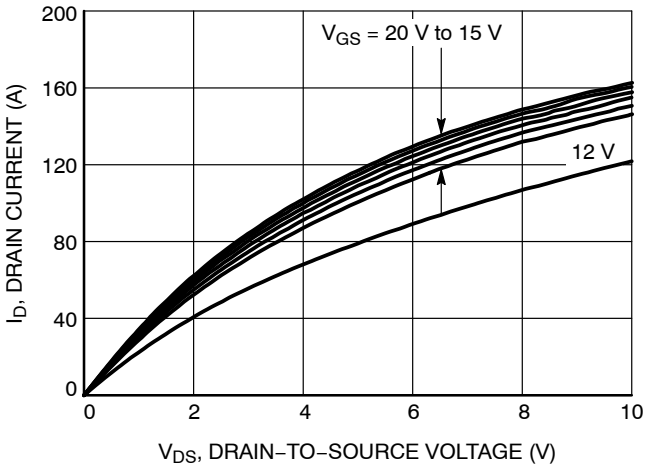

Figure 1. On−Region Characteristics

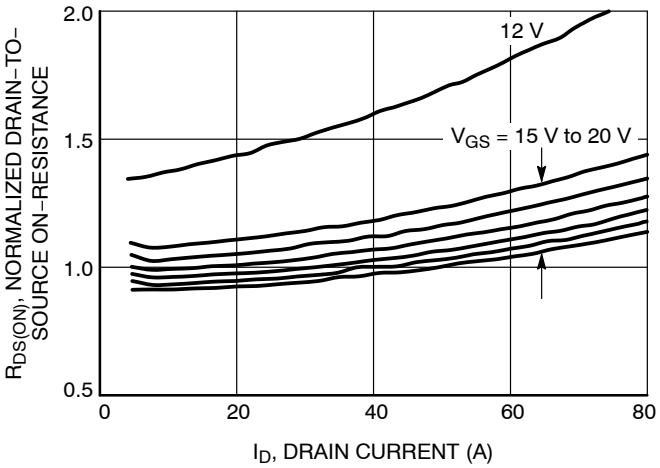

Figure 2. Normalized On−Resistance vs. Drain Current and Gate Voltage

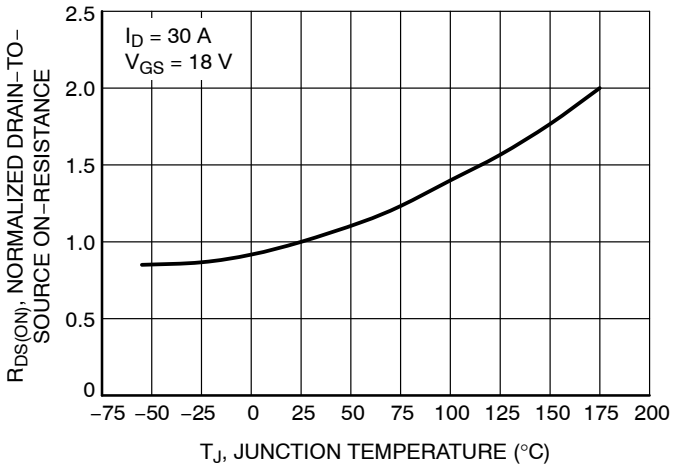

Figure 3. On−Resistance Variation with Temperature

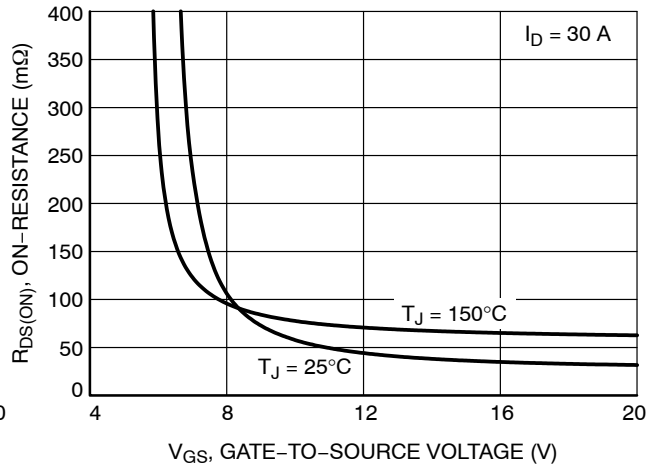

Figure 4. On−Resistance vs. Gate−to−Source Voltage

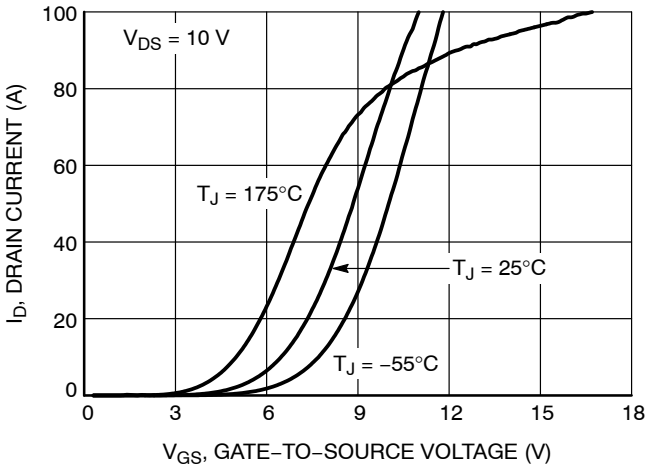

Figure 5. Transfer Characteristics

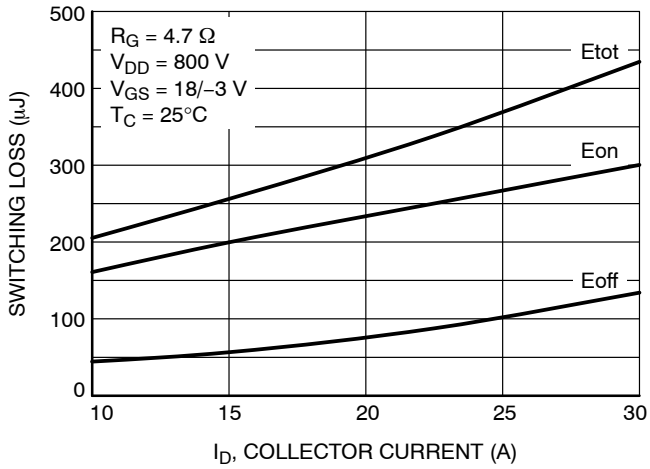

Figure 6. Switching Loss vs. Collector Current

Share Feedback
Your Opinion Matters

TYPICAL CHARACTERISTICS

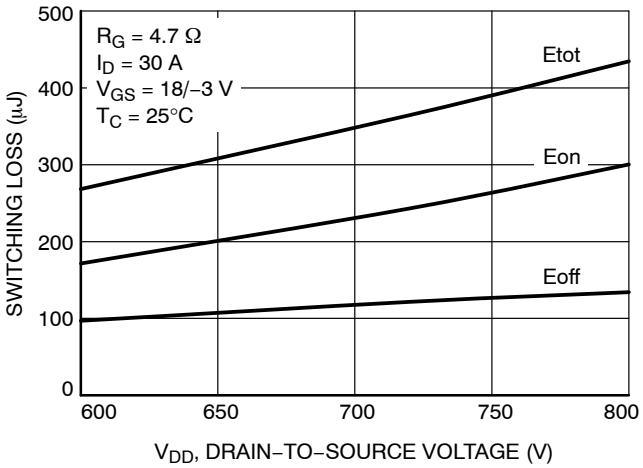

Figure 7. Switching Loss vs. Drain−to−Source Voltage

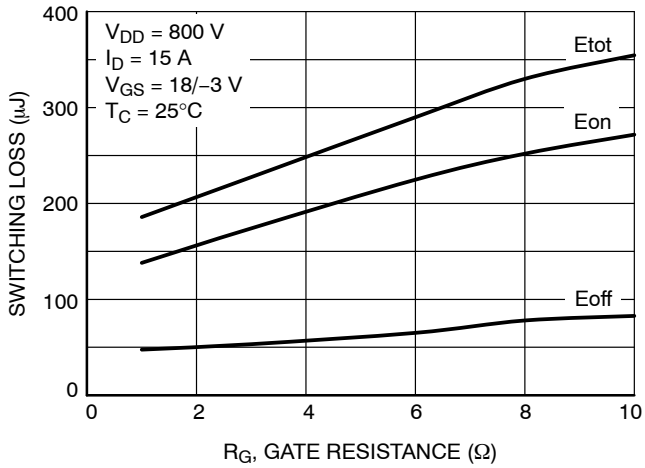

Figure 8. Switching Loss vs. Gate Resistance

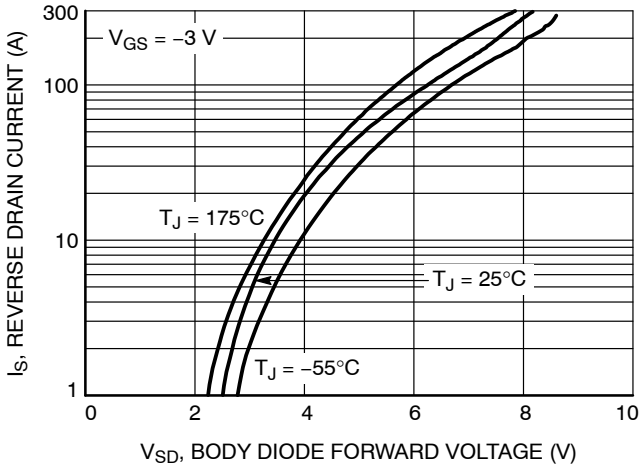

Figure 9. Reverse Drain Current vs. Body Diode Forward Voltage

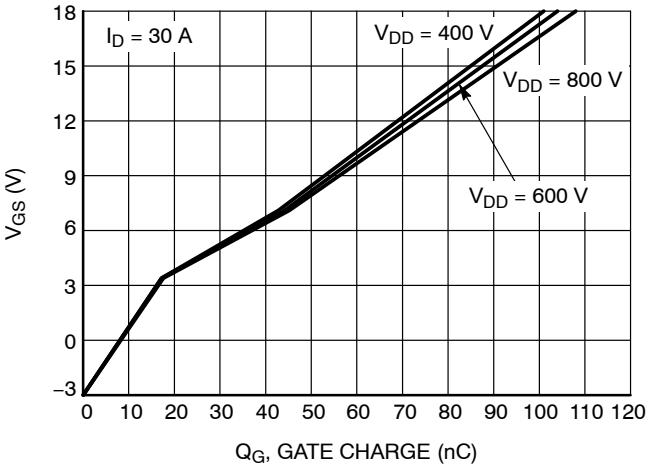

Figure 10. Gate−to−Source Voltage vs. Total Charge

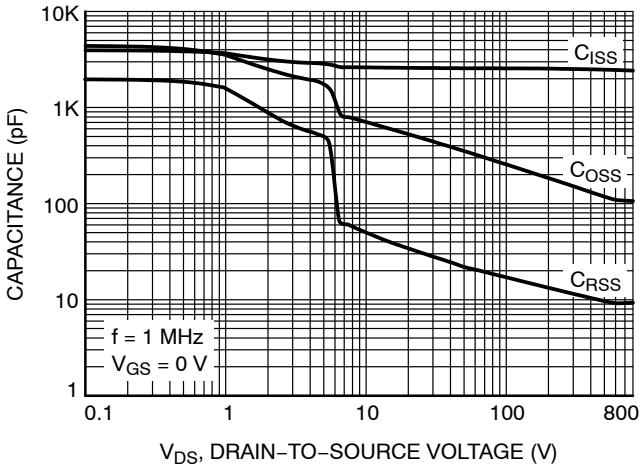

Figure 11. Capacitance vs. Drain−to−Source Voltage

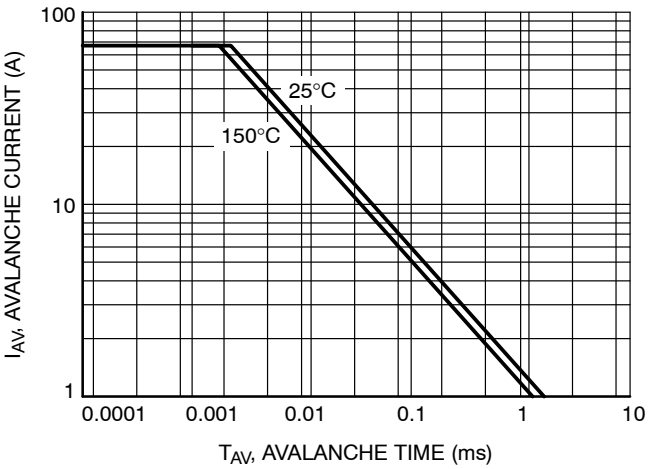

Figure 12. Unclamped Inductive Switching Capability

Share Feedback
Your Opinion Matters

TYPICAL CHARACTERISTICS

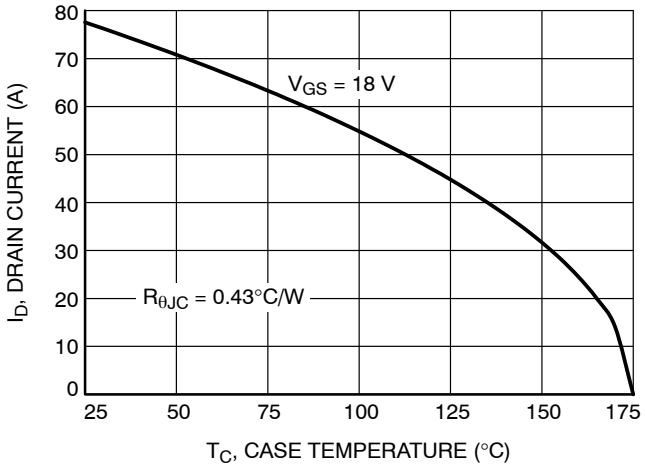

Figure 13. Maximum Continuous Drain Current vs. Case Temperature

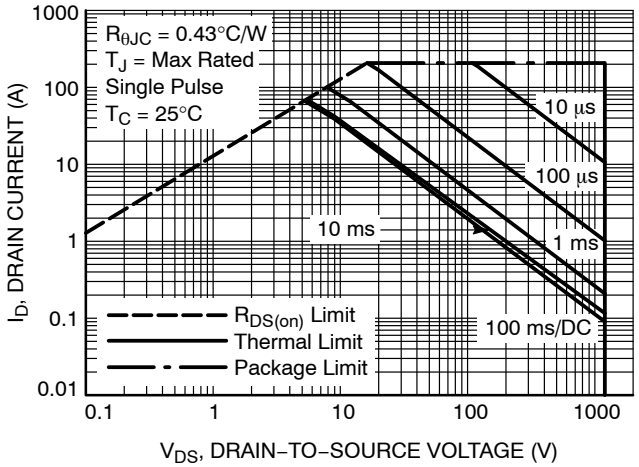

Figure 14. Safe Operating Area

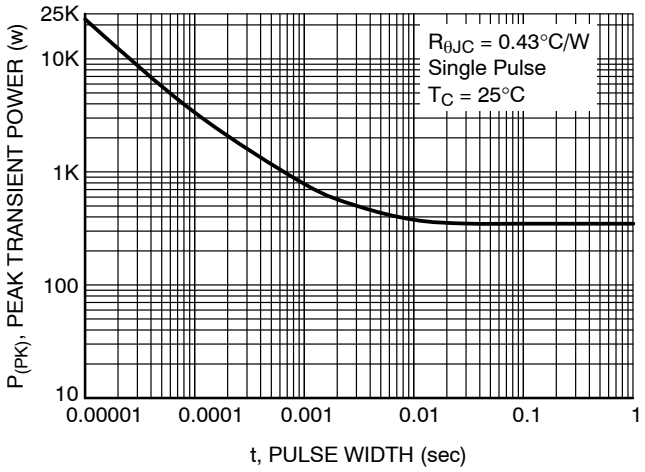

Figure 15. Single Pulse Maximum Power Dissipation

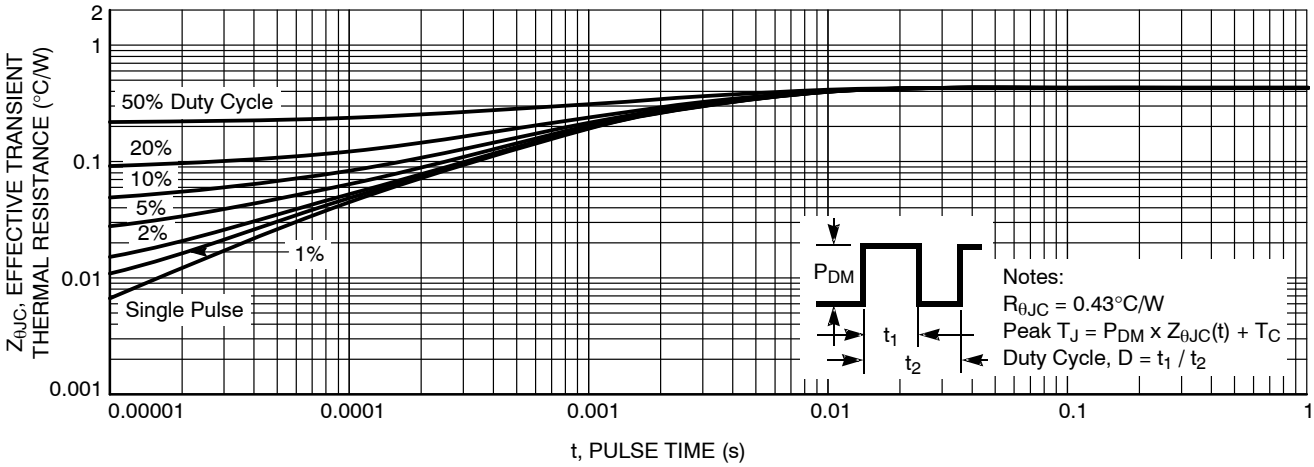

Figure 16. Junction−to−Case Transient Thermal Response

Share Feedback
Your Opinion Matters

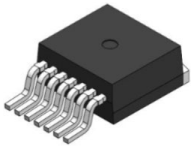

D²PAK7 (TO−263−7L HV)
CASE 418BJ
ISSUE B

DATE 16 AUG 2019

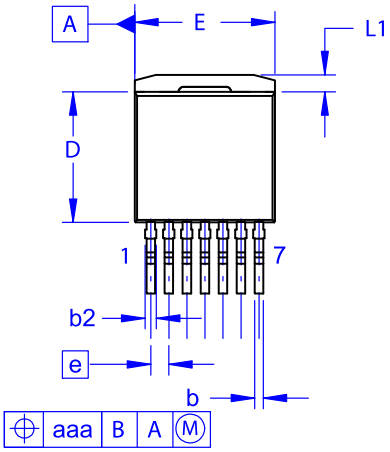

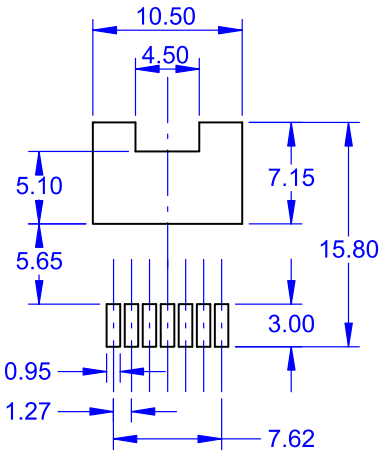

LAND PATTERN RECOMMENDATION

NOTES:

A. PACKAGE CONFORMS TO JEDEC TO-263 VARIATION CB EXCEPT WHERE NOTED.
B. ALL DIMENSIONS ARE IN MILLIMETERS.
C. OUT OF JEDEC STANDARD VALUE.
D. DIMENSION AND TOLERANCE AS PER ASME Y14.5-2009.
E. DIMENSIONS ARE EXCLUSIVE OF BURRS, MOLD FLASH AND TIE BAR PROTRUSIONS.

DIM	MILLIMETERS		
	MIN	NOM	MAX
A	4.30	4.50	4.70
A1	0.00	0.10	0.20
b2	0.60	0.70	0.80
b	0.51	0.60	0.70
c	0.40	0.50	0.60
c2	1.20	1.30	1.40
D	9.00	9.20	9.40
D1	6.15	6.80	7.15
E	9.70	9.90	10.20
E1	7.15	7.65	8.15
e	~	1.27	~
H	15.10	15.40	15.70
L	2.44	2.64	2.84
L1	1.00	1.20	1.40
L3	~	0.25	~
aaa	~	~	0.25

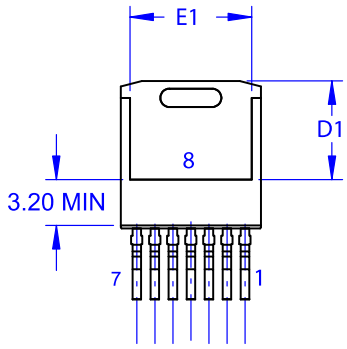

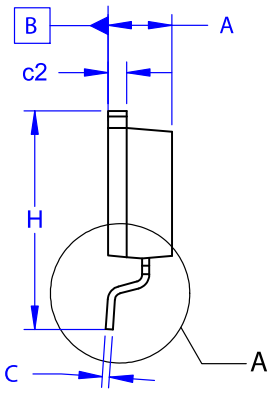

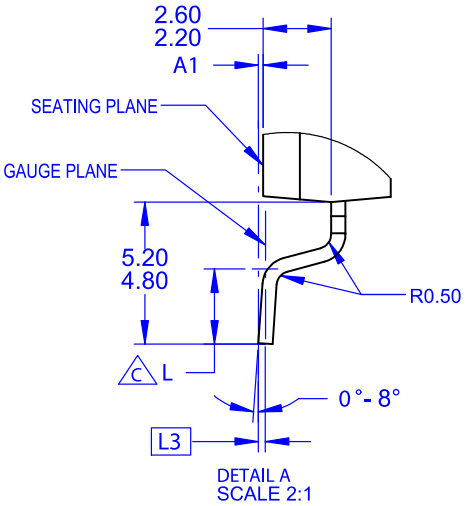

GENERIC MARKING DIAGRAM*

XXXX = Specific Device Code
A = Assembly Location
Y = Year
WW = Work Week
G = Pb−Free Package

*This information is generic. Please refer to device data sheet for actual part marking. Pb−Free indicator, "G" or microdot "▪", may or may not be present. Some products may not follow the Generic Marking.

DOCUMENT NUMBER:	98AON84234G	Electronic versions are uncontrolled except when accessed directly from the Document Repository. Printed versions are uncontrolled except when stamped "CONTROLLED COPY" in red.
DESCRIPTION:	D²PAK7 (TO−263−7L HV)	PAGE 1 OF 1

onsemi and onsemi are trademarks of Semiconductor Components Industries, LLC dba **onsemi** or its subsidiaries in the United States and/or other countries. **onsemi** reserves the right to make changes without further notice to any products herein. **onsemi** makes no warranty, representation or guarantee regarding the suitability of its products for any particular purpose, nor does **onsemi** assume any liability arising out of the application or use of any product or circuit, and specifically disclaims any and all liability, including without limitation special, consequential or incidental damages. **onsemi** does not convey any license under its patent rights nor the rights of others.

onsemi, onsemi, and other names, marks, and brands are registered and/or common law trademarks of Semiconductor Components Industries, LLC dba "**onsemi**" or its affiliates and/or subsidiaries in the United States and/or other countries. **onsemi** owns the rights to a number of patents, trademarks, copyrights, trade secrets, and other intellectual property. A listing of **onsemi**'s product/patent coverage may be accessed at www.onsemi.com/site/pdf/Patent−Marking.pdf. **onsemi** reserves the right to make changes at any time to any products or information herein, without notice. The information herein is provided "as−is" and **onsemi** makes no warranty, representation or guarantee regarding the accuracy of the information, product features, availability, functionality, or suitability of its products for any particular purpose, nor does **onsemi** assume any liability arising out of the application or use of any product or circuit, and specifically disclaims any and all liability, including without limitation special, consequential or incidental damages. Buyer is responsible for its products and applications using **onsemi** products, including compliance with all laws, regulations and safety requirements or standards, regardless of any support or applications information provided by **onsemi**. "Typical" parameters which may be provided in **onsemi** data sheets and/or specifications can and do vary in different applications and actual performance may vary over time. All operating parameters, including "Typicals" must be validated for each customer application by customer's technical experts. **onsemi** does not convey any license under any of its intellectual property rights nor the rights of others. **onsemi** products are not designed, intended, or authorized for use as a critical component in life support systems or any FDA Class 3 medical devices or medical devices with a same or similar classification in a foreign jurisdiction or any devices intended for implantation in the human body. Should Buyer purchase or use **onsemi** products for any such unintended or unauthorized application, Buyer shall indemnify and hold **onsemi** and its officers, employees, subsidiaries, affiliates, and distributors harmless against all claims, costs, damages, and expenses, and reasonable attorney fees arising out of, directly or indirectly, any claim of personal injury or death associated with such unintended or unauthorized use, even if such claim alleges that **onsemi** was negligent regarding the design or manufacture of the part. **onsemi** is an Equal Opportunity/Affirmative Action Employer. This literature is subject to all applicable copyright laws and is not for resale in any manner.

ADDITIONAL INFORMATION

TECHNICAL PUBLICATIONS:
Technical Library: www.onsemi.com/design/resources/technical−documentation
onsemi Website: www.onsemi.com

ONLINE SUPPORT: www.onsemi.com/support
For additional information, please contact your local Sales Representative at
www.onsemi.com/support/sales