EFC2K101NUZ

Power MOSFET for 1-Cell Lithium-ion Battery Protection

12 V, 6.2 mΩ, 15 A, Dual N-Channel

ON Semiconductor®

www.onsemi.com

This Power MOSFET features a low on-state resistance. This device is suitable for applications such as power switches of portable machines. Best suited for 1-cell lithium-ion battery applications.

Features

- 2.5 V Drive
- Common-Drain Type
- ESD Diode-Protected Gate
- This device is Pb-Free, Halogen Free and RoHS Compliance

Applications

- 1-Cell Lithium-ion Battery Charging and Discharging Switch

Specifications

ABSOLUTE MAXIMUM RATINGS (T_A = 25°C)

Parameter	Symbol	Value	Unit
Source to Source Voltage	V_{SSS}	12	V
Gate to Source Voltage	V_{GSS}	±8	V
Source Current (DC)	I_S	15	A
Source Current (Pulse) PW ≤ 10 μs, duty cycle ≤ 1%	I_{SP}	60	A
Total Dissipation (Note 1)	P_T	1.4	W
Junction Temperature	T_j	150	°C
Storage Temperature	T_{stg}	−55 to +150	°C

Stresses exceeding those listed in the Maximum Ratings table may damage the device. If any of these limits are exceeded, device functionality should not be assumed, damage may occur and reliability may be affected.

THERMAL RESISTANCE RATINGS

Parameter	Symbol	Value	Unit
Junction to Ambient (Note 1)	$R_{\theta JA}$	89.3	°C/W

1. Surface mounted on ceramic substrate (5000 mm^2 × 0.8 mm).

V_{SSS}	$R_{SS(ON)}$ MAX	I_S MAX
12 V	6.2 mΩ @ 4.5 V	15 A
	6.6 mΩ @ 3.8 V	
	8.0 mΩ @ 3.1 V	
	10.0 mΩ @ 2.5 V	

ELECTRICAL CONNECTION

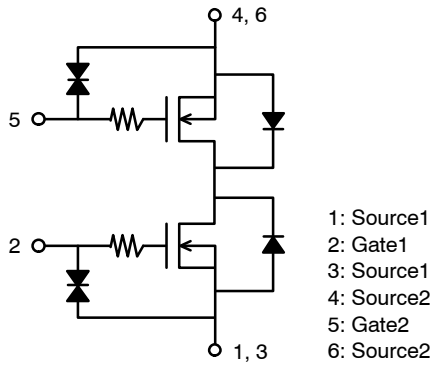

N-Channel

PIN ASSIGNMENT

WLCSP6
(1.79 x 1.18 x 0.13)
CASE 567VU

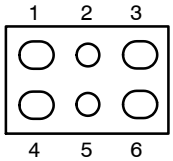

MARKING DIAGRAM

NV = Specific Device Code
A = Assembly Location
Y = Year
W = Work Week
ZZ = Assembly Lot

ORDERING INFORMATION

See detailed ordering and shipping information on page 2 of this data sheet.

© Semiconductor Components Industries, LLC, 2018

ELECTRICAL CHARACTERISTICS (T_A = 25°C)

Symbol	Parameter	Conditions	Min	Typ	Max	Unit
$V_{(BR)SSS}$	Source to Source Breakdown Voltage	I_S = 1 mA, V_{GS} = 0 V	12			V
I_{SSS}	Zero-Gate Voltage Source Current	V_{SS} = 10 V, V_{GS} = 0 V			1	μA
I_{GSS}	Gate to Source Leakage Current	V_{GS} = ±8 V, V_{SS} = 0 V			±1	μA
V_{GS}(th)	Gate Threshold Voltage	V_{SS} = 6 V, I_S = 1 mA	0.4		1.3	V
R_{SS}(on)	Static Source to Source On-State Resistance	I_S = 5 A, V_{GS} = 4.5 V	3.2	4.7	6.2	mΩ
		I_S = 5 A, V_{GS} = 3.8 V	3.5	5.0	6.6	mΩ
		I_S = 5 A, V_{GS} = 3.1 V	3.9	5.7	8.0	mΩ
		I_S = 5 A, V_{GS} = 2.5 V	4.5	6.6	10.0	mΩ
t_d(on)	Turn-ON Delay Time	V_{SS} = 5 V, V_{GS} = 3.8 V, I_S = 5 A Rg = 10 kΩ Switching Test Circuit		5		μs
t_r	Rise Time			19		μs
t_d(off)	Turn-OFF Delay Time			53		μs
t_f	Fall Time			40		μs
Qg	Total Gate Charge	V_{SS} = 5 V, V_{GS} = 3.8 V, I_S = 5 A		16		nC
$V_{F(S-S)}$	Forward Source to Source Voltage	I_S = 3 A, V_{GS} = 0 V		0.75	1.2	V

Product parametric performance is indicated in the Electrical Characteristics for the listed test conditions, unless otherwise noted. Product performance may not be indicated by the Electrical Characteristics if operated under different conditions.

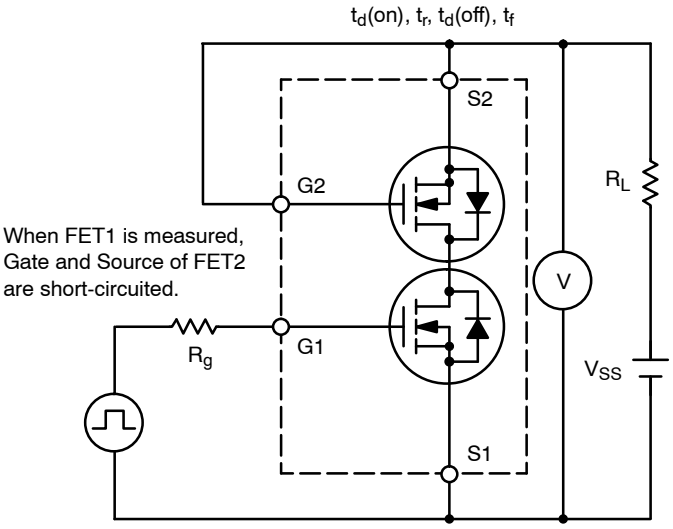

Figure 1. Switching Test Circuit

ORDERING INFORMATION

Device	Marking	Package	Shipping† (Qty / Packing)
EFC2K101NUZTDG	NV	WLCSP6, 1.79 x 1.18 x 0.13 (Pb-Free / Halogen Free)	5,000 / Tape & Reel

†For information on tape and reel specifications, including part orientation and tape sizes, please refer to our Tape and Reel Packaging Specifications Brochure, BRD8011/D.

TYPICAL CHARACTERISTICS

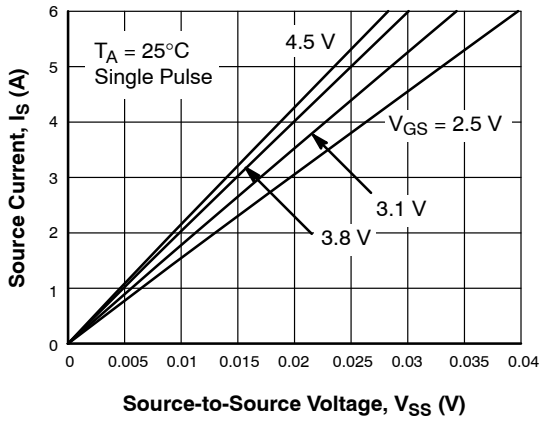

Figure 2. On-Region Characteristics

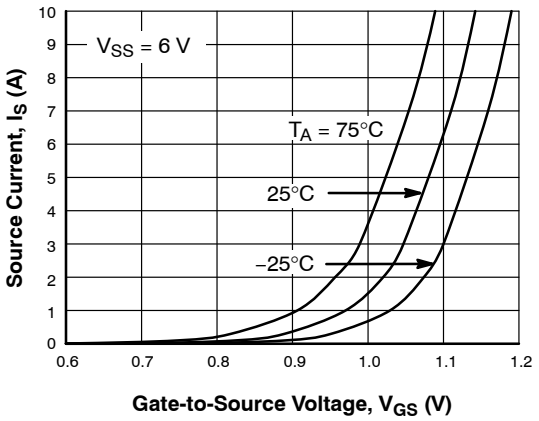

Figure 3. Transfer Characteristics

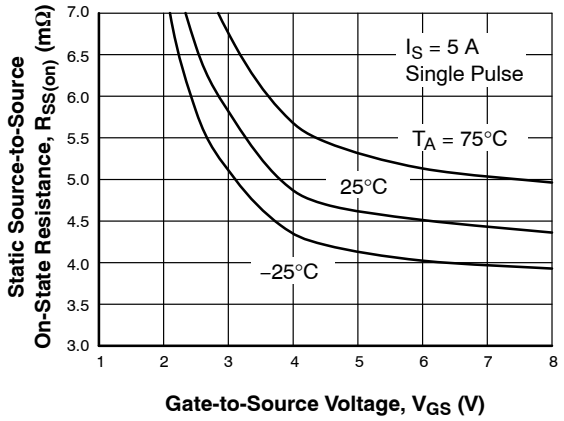

Figure 4. On-Resistance vs. Gate-to-Source Voltage

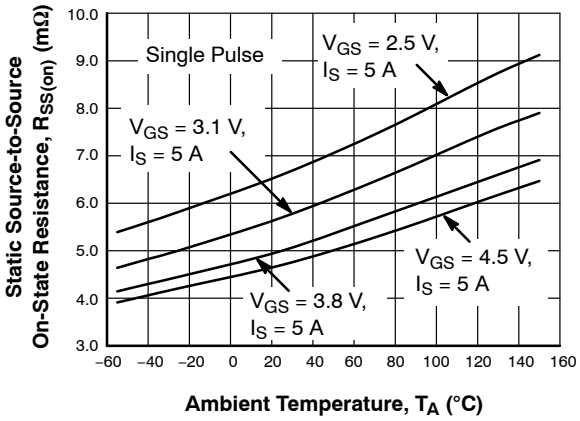

Figure 5. On-Resistance vs. Temperature

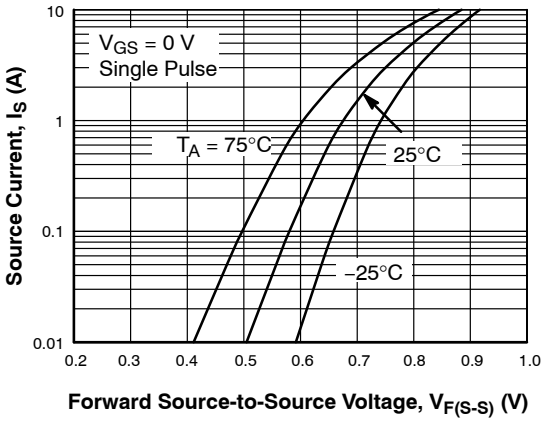

Figure 6. Forward Source-to-Source Voltage vs. Current

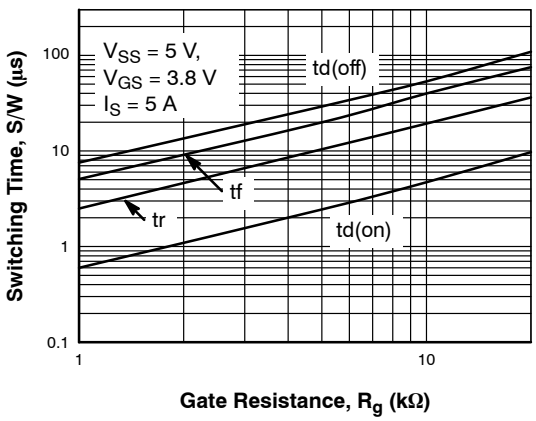

Figure 7. Switching Time vs. Gate Resistance

TYPICAL CHARACTERISTICS

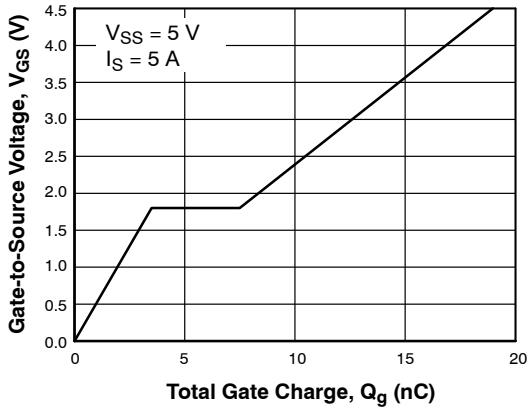

Figure 8. Gate-to-Source Voltage vs. Total Charge

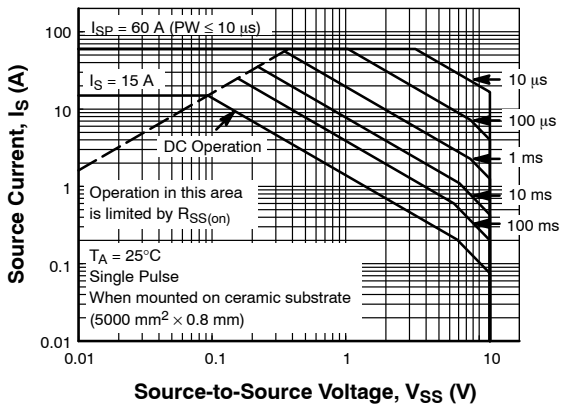

Figure 9. Safe Operating Area

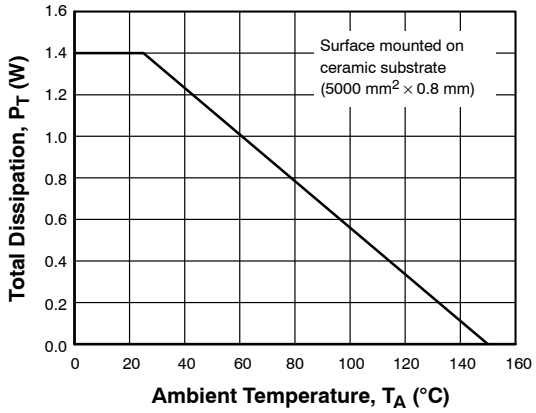

Figure 10. Total Dissipation vs. Temperature

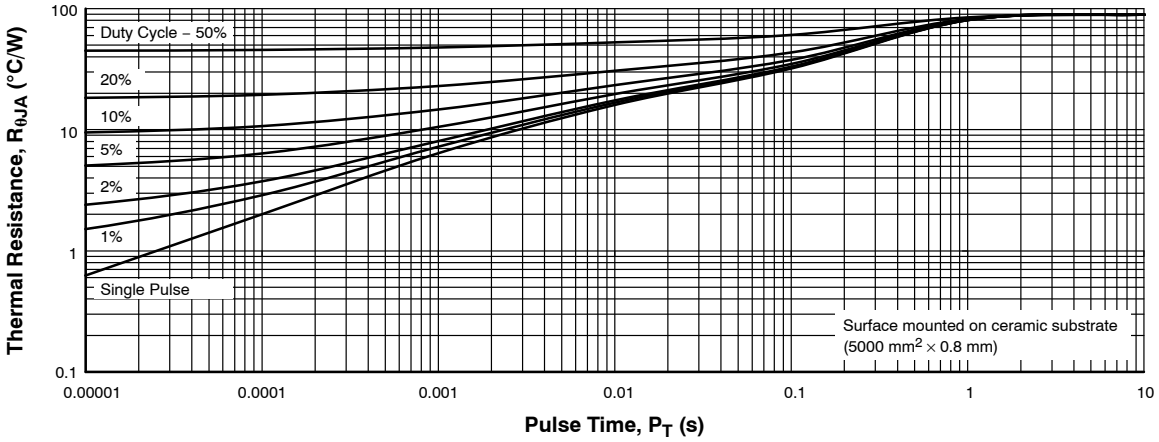

Figure 11. Thermal Response

Note on Usage: Since the EFC2K101NUZ is a MOSFET product, please avoid using this device in the vicinity of highly charged objects.

WLCSP6 1.79x1.18x0.13
CASE 567VU
ISSUE O

DATE 09 FEB 2018

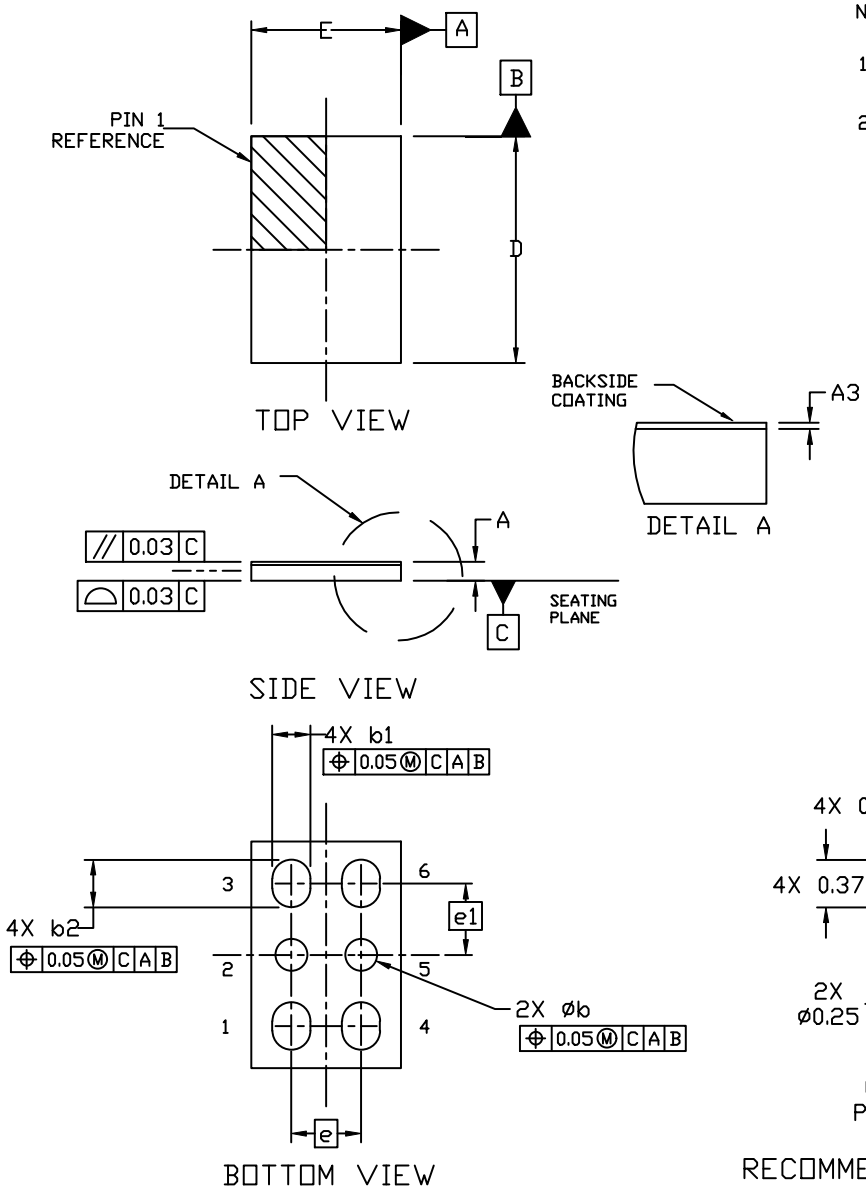

NOTES:

1. DIMENSIONING AND TOLERANCING PER ASME Y14.5M, 1994.
2. CONTROLLING DIMENSION: MILLIMETERS

DIM	MILLIMETERS		
	MIN.	NOM.	MAX.
A	0.10	0.125	0.15
A3	0.025 REF		
b	0.22	0.25	0.28
b1	0.27	0.30	0.33
b2	0.345	0.375	0.405
D	1.76	1.79	1.82
E	1.15	1.18	1.21
e	0.55 BSC		
e1	0.5625 BSC		

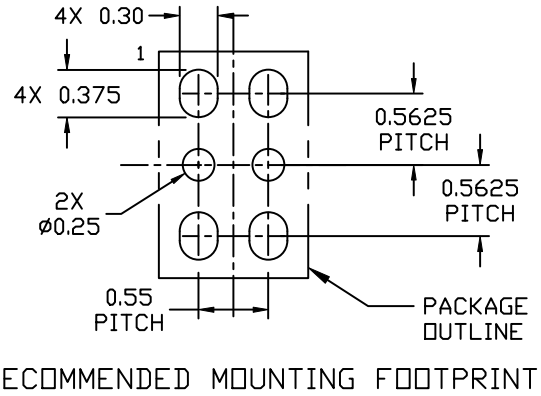

GENERIC MARKING DIAGRAM*

XXXXX▪
AYWZZ▪

A = Assembly Location
Y = Year
W = Work Week
ZZ = Assembly Lot
▪ = Pb−Free Package
(Note: Microdot may be in either location)

*This information is generic. Please refer to device data sheet for actual part marking. Pb−Free indicator, "G" or microdot " ▪", may or may not be present. Some products may not follow the Generic Marking.

DOCUMENT NUMBER:	98AON83699G	Electronic versions are uncontrolled except when accessed directly from the Document Repository. Printed versions are uncontrolled except when stamped "CONTROLLED COPY" in red.
DESCRIPTION:	WLCSP6 1.79x1.18x0.13	PAGE 1 OF 1

onsemi and onsemi are trademarks of Semiconductor Components Industries, LLC dba **onsemi** or its subsidiaries in the United States and/or other countries. **onsemi** reserves the right to make changes without further notice to any products herein. **onsemi** makes no warranty, representation or guarantee regarding the suitability of its products for any particular purpose, nor does **onsemi** assume any liability arising out of the application or use of any product or circuit, and specifically disclaims any and all liability, including without limitation special, consequential or incidental damages. **onsemi** does not convey any license under its patent rights nor the rights of others.

onsemi, onsemi, and other names, marks, and brands are registered and/or common law trademarks of Semiconductor Components Industries, LLC dba "**onsemi**" or its affiliates and/or subsidiaries in the United States and/or other countries. **onsemi** owns the rights to a number of patents, trademarks, copyrights, trade secrets, and other intellectual property. A listing of **onsemi**'s product/patent coverage may be accessed at www.onsemi.com/site/pdf/Patent−Marking.pdf. **onsemi** reserves the right to make changes at any time to any products or information herein, without notice. The information herein is provided "as−is" and **onsemi** makes no warranty, representation or guarantee regarding the accuracy of the information, product features, availability, functionality, or suitability of its products for any particular purpose, nor does **onsemi** assume any liability arising out of the application or use of any product or circuit, and specifically disclaims any and all liability, including without limitation special, consequential or incidental damages. Buyer is responsible for its products and applications using **onsemi** products, including compliance with all laws, regulations and safety requirements or standards, regardless of any support or applications information provided by **onsemi**. "Typical" parameters which may be provided in **onsemi** data sheets and/or specifications can and do vary in different applications and actual performance may vary over time. All operating parameters, including "Typicals" must be validated for each customer application by customer's technical experts. **onsemi** does not convey any license under any of its intellectual property rights nor the rights of others. **onsemi** products are not designed, intended, or authorized for use as a critical component in life support systems or any FDA Class 3 medical devices or medical devices with a same or similar classification in a foreign jurisdiction or any devices intended for implantation in the human body. Should Buyer purchase or use **onsemi** products for any such unintended or unauthorized application, Buyer shall indemnify and hold **onsemi** and its officers, employees, subsidiaries, affiliates, and distributors harmless against all claims, costs, damages, and expenses, and reasonable attorney fees arising out of, directly or indirectly, any claim of personal injury or death associated with such unintended or unauthorized use, even if such claim alleges that **onsemi** was negligent regarding the design or manufacture of the part. **onsemi** is an Equal Opportunity/Affirmative Action Employer. This literature is subject to all applicable copyright laws and is not for resale in any manner.

ADDITIONAL INFORMATION

TECHNICAL PUBLICATIONS:
Technical Library: www.onsemi.com/design/resources/technical−documentation
onsemi Website: www.onsemi.com

ONLINE SUPPORT: www.onsemi.com/support
For additional information, please contact your local Sales Representative at
www.onsemi.com/support/sales