MOSFET – N-Channel QFET

1000 V, 8 A, 1.45 Ω

FQD30N06

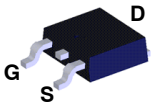

TO−252−3
CASE 369AS

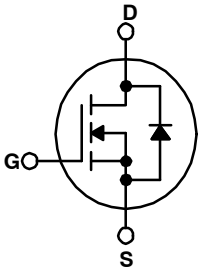

Description

This N−Channel Enhancement Mode Power MOSFET is produced using **onsemi**'s proprietary planar stripe and DMOS technology. This advanced MOSFET technology has been especially tailored to reduce on−state resistance, and to provide superior switching performance and high avalanche energy strength. These devices are suitable for switched mode power supplies, audio amplifier, DC motor control, and variable switching power applications.

Features

- 22.7 A, 60 V $R_{DS(on)}$ = 45 mΩ (Max.) @ V_{GS} = 10 V, I_D = 11.4 A
- Low Gate Charge (Typ. 19 nC)
- Low Crss (Typ. 40 pF)
- 100% Avalanche Tested
- This Device is Pb−Free Halide, Free and RoHS Compliant

MOSFET MAXIMUM RATINGS (T_C = 25°C unless otherwise noted.)

Symbol	Parameter	Value	Unit
V_{DSS}	Drain to Source Voltage	60	V
I_D	Drain Current − Continuous (T_C = 25°C) − Continuous (T_C = 100°C)	 22.7 14.3	A
I_{DM}	Drain Current − Pulsed (Note 1)	90.8	A
V_{GSS}	Gate−Source Voltage	±25	V
E_{AS}	Single Pulse Avalanche Energy (Note 2)	280	mJ
I_{AR}	Avalanche Current (Note 1)	22.7	A
E_{AR}	Repetitive Avalanche Energy (Note 1)	4.4	mJ
dv/dt	Peak Diode Recovery dv/dt (Note 3)	7.0	V/ns
P_D	Power Dissipation (T_A = 25°C) *	2.5	W
	Power Dissipation − (T_C = 25°C) − Derate Above 25°C	 44 0.35	 W W/°C
T_J,T_{STG}	Operating and Storage Temperature Range	−55 to +150	°C
T_L	Maximum Lead Temperature for Soldering Purpose, 1/8" from Case for 5 Seconds	300	°C

Stresses exceeding those listed in the Maximum Ratings table may damage the device. If any of these limits are exceeded, device functionality should not be assumed, damage may occur and reliability may be affected.

MARKING DIAGRAM

&Z	= Assembly Plant Code
&3	= Numeric Date Code
&K	= 2−Digit Lot Code
FQD30N06	= Specific Device Code

ORDERING INFORMATION

Device	Package	Shipping†
FQD30N06	TO−252−3 (Pb−Free)	2500 / Tape & Reel

†For information on tape and reel specifications, including part orientation and tape sizes, please refer to our Tape and Reel Packaging Specifications Brochure, BRD8011/D.

© Semiconductor Components Industries, LLC, 2016

THERMAL CHARACTERISTICS

Symbol	Parameter	Value	Unit
$R_{\theta JC}$	Thermal Resistance, Junction to Case, Max.	2.85	°C/W
$R_{\theta JA}$	Thermal Resistance, Junction to Ambient (Minimum Pad of 2−oz Copper), Max.	110	
	Thermal Resistance, Junction to Ambient (*1 in^2 Pad of 2−oz Copper), Max.	50	

ELECTRICAL CHARACTERISTICS (T_C = 25°C unless otherwise noted)

Symbol	Parameter	Test Conditions	Min	Typ	Max	Unit
Off Characteristics						
BV_{DSS}	Drain to Source Breakdown Voltage	V_{GS} = 0 V, I_D = 250 μA	60	–	–	V
$\frac{\Delta BV_{DSS}}{\Delta T_J}$	Breakdown Voltage Temperature Coefficient	I_D = 250 μA, Referenced to 25°C	–	0.06	–	V/°C
I_{DSS}	Zero Gate Voltage Drain Current	V_{DS} = 60 V, V_{GS} = 0 V	–	–	1	μA
	Zero Gate Voltage Drain Current	V_{DS} = 48 V, T_C = 125°C	–	–	10	μA
I_{GSSF}	Gate to Body Leakage Current, Forward	V_{GS} = 25 V, V_{DS} = 0 V	–	–	100	nA
I_{GSSR}	Gate to Body Leakage Current, Reverse	V_{GS} = −25 V, V_{DS} = 0 V	–	–	−100	nA
On Characteristics						
$V_{GS(th)}$	Gate Threshold Voltage	V_{DS} = V_{GS}, I_D = 250 μA	2.0	–	4.0	V
$R_{DS(on)}$	Static Drain−Source On−Resistance	V_{GS} = 10 V, I_D = 11.4 A	–	0.036	0.045	Ω
g_{FS}	Forward Transconductance	V_{DS} = 25 V, I_D = 11.4 A	–	15	–	S
Dynamic Characteristics						
C_{iss}	Input Capacitance	V_{DS} = 25 V, V_{GS} = 0 V, f = 1.0 MHz	–	725	945	pF
C_{oss}	Output Capacitance		–	270	350	pF
C_{rss}	Reverse Transfer Capacitance		–	40	52	pF
Switching Characteristics						
$t_{d(on)}$	Turn−On Delay Time	V_{DD} = 30 V, I_D = 15 A, R_G = 25 Ω (Note 4)	–	10	30	ns
t_r	Turn−On Rise Time		–	85	180	ns
$t_{d(off)}$	Turn−Off Delay Time		–	35	80	ns
t_f	Turn−Off Fall Time		–	40	90	ns
Qg	Total Gate Charge	V_{DS} = 48 V, I_D = 30 A, V_{GS} = 10 V (Note 4)	–	19	25	nC
Qgs	Gate−Source Charge		–	5.4	–	nC
Qgd	Gate−Drain Charge		–	8.5	–	nC
Drain−Source Diode Characteristics and Maximum Ratings						
I_S	Maximum Continuous Drain−Source Diode Forward Current		–	–	22.7	A
I_{SM}	Maximum Pulsed Drain−Source Diode Forward Current		–	–	90.8	A
V_{SD}	Drain−Source Diode Forward Voltage	V_{GS} = 0 V, I_S = 22.7 A	–	–	1.5	V
t_{rr}	Reverse Recovery Time	V_{GS} = 0 V, I_S = 30 A, dI_F/dt = 100 A/μs	–	45	–	ns
Q_{rr}	Reverse Recovery Charge		–	65	–	nC

Product parametric performance is indicated in the Electrical Characteristics for the listed test conditions, unless otherwise noted. Product performance may not be indicated by the Electrical Characteristics if operated under different conditions.

NOTES:
1. Repetitive Rating: Pulse−width limited by maximum junction temperature.
2. L = 630 μH, I_{AS} = 227 A, V_{DD} = 25 V, R_G = 25 Ω starting T_J = 25°C.
3. $I_{SD} \leq$ 30 A, di/dt ≤ 300 A/μs, $V_{DD} \leq BV_{DSS}$, starting T_J = 25°C.
4. Essentially independent of operating temperature.

TYPICAL CHARACTERISTICS

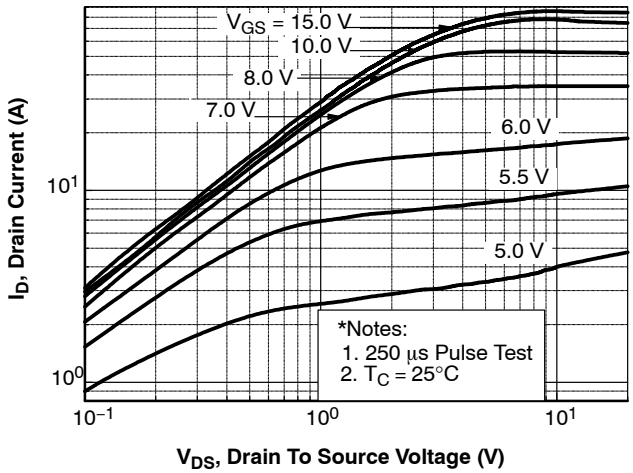

Figure 1. On−Region Characteristics

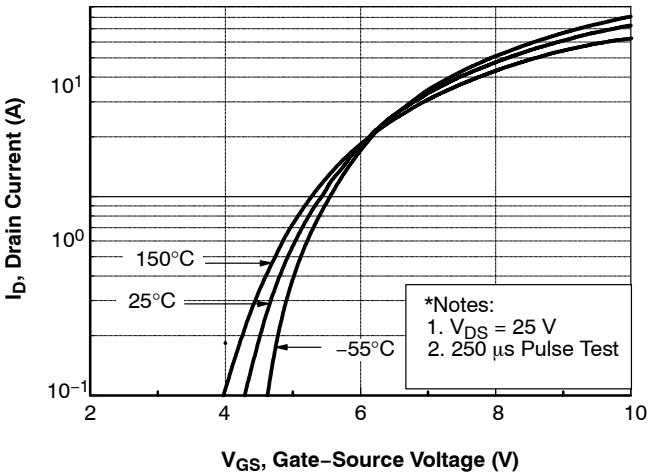

Figure 2. Transfer Characteristics

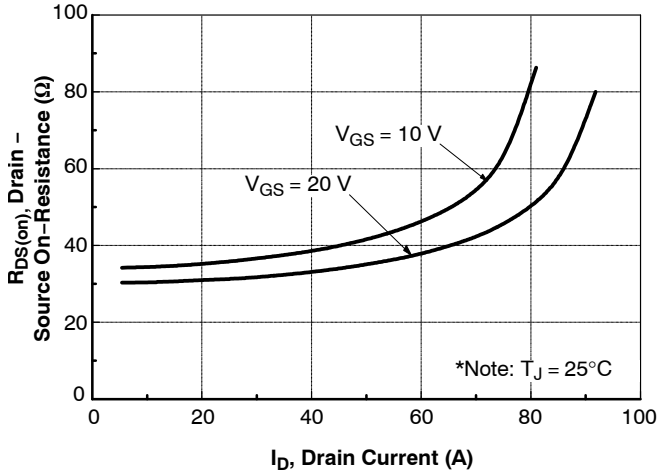

Figure 3. On−Resistance Variation vs Drain Current and Gate Voltage

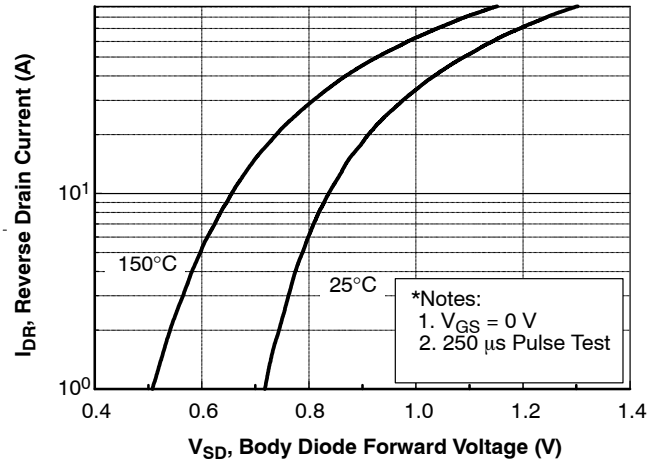

Figure 4. Body Diode Forward Voltage Variation vs Source Current and Temperature

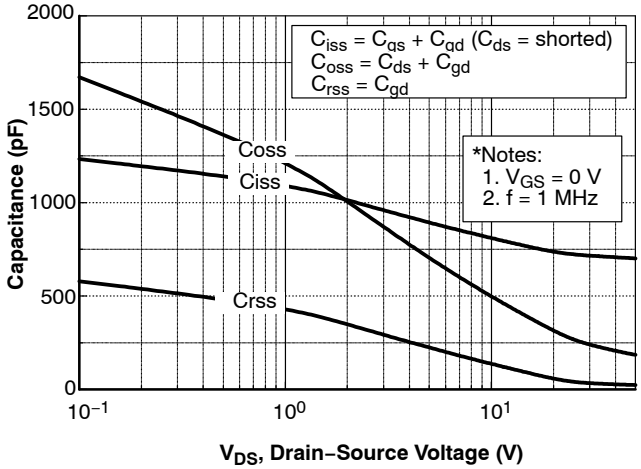

Figure 5. Capacitance Characteristics

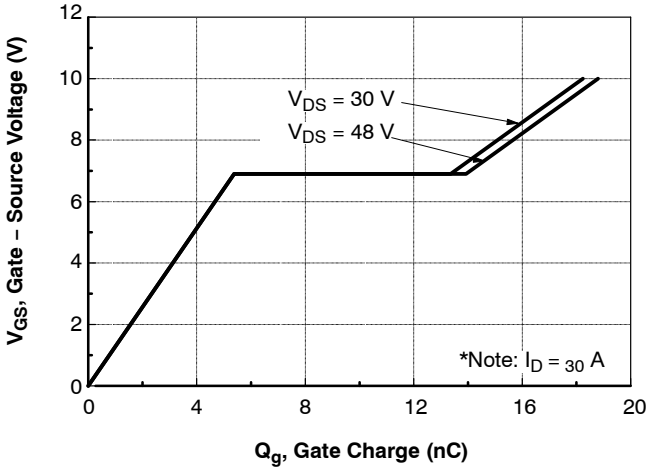

Figure 6. Gate Charge Characteristics

TYPICAL CHARACTERISTICS (CONTINUED)

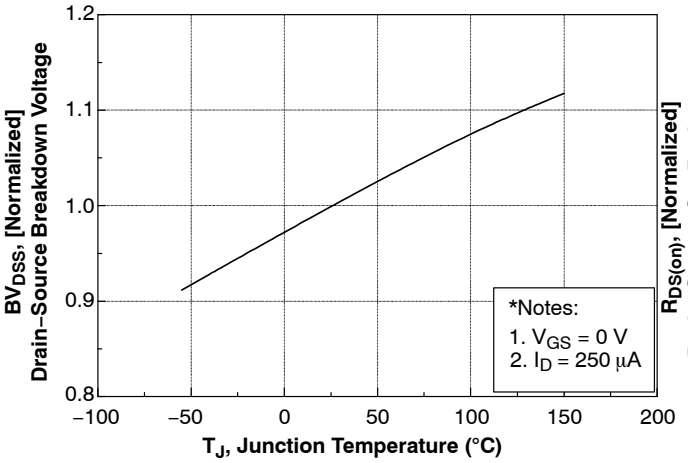

Figure 7. Breakdown Voltage Variation vs Temperature

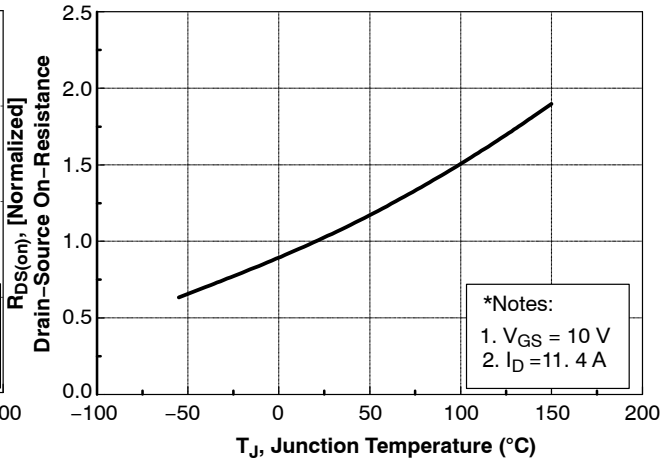

Figure 8. On−Resistance Variation vs Temperature

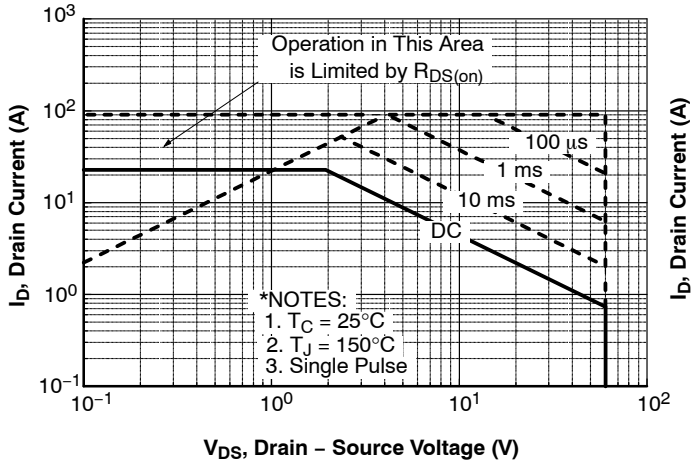

Figure 9. Maximum Safe Operating Area

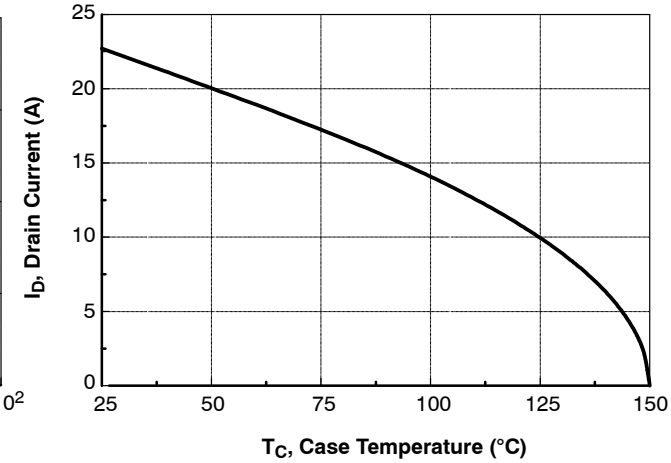

Figure 10. Maximum Drain Current vs. Case Temperature

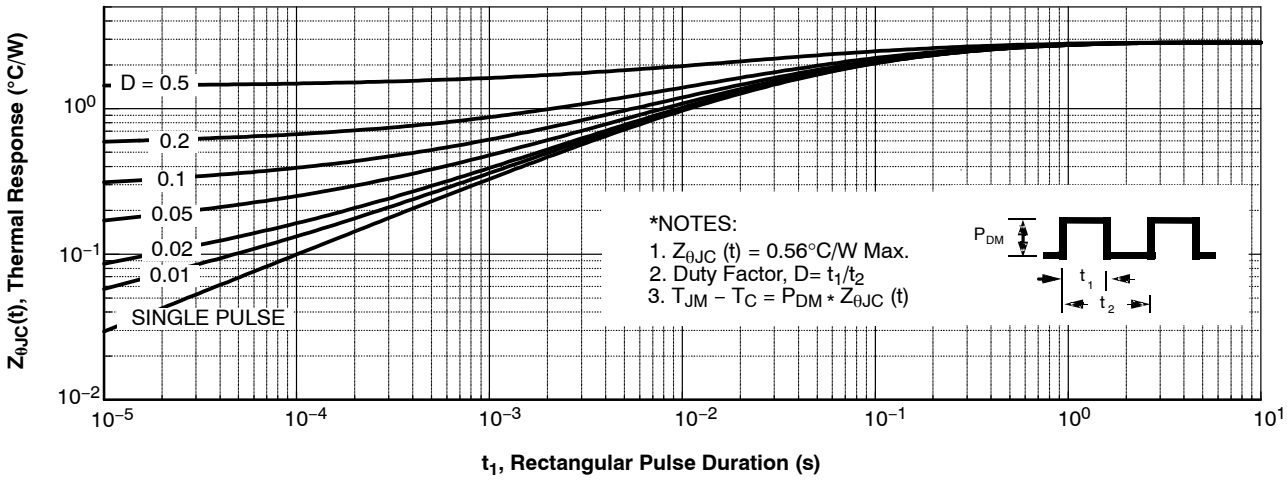

Figure 11. Transient Thermal Response Curve

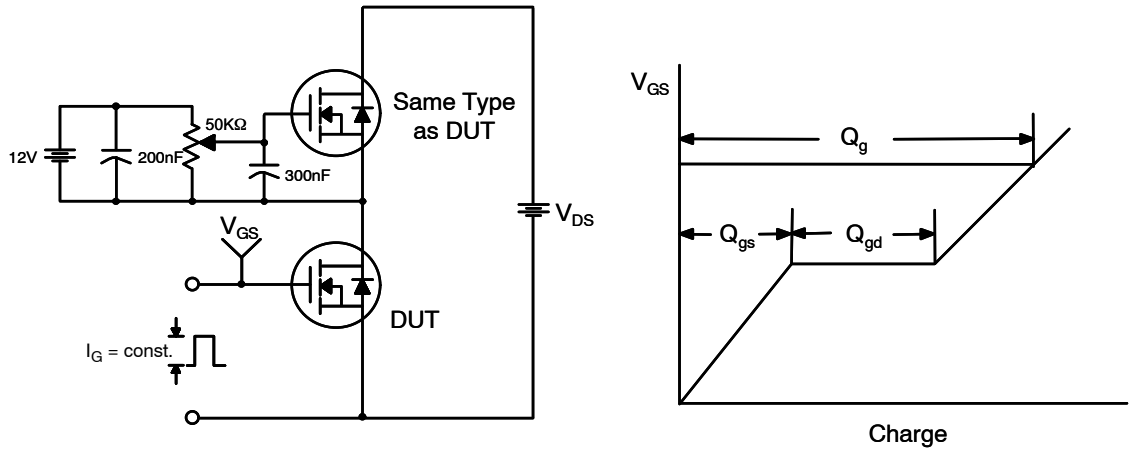

Figure 12. Gate Charge Test Circuit & Waveform

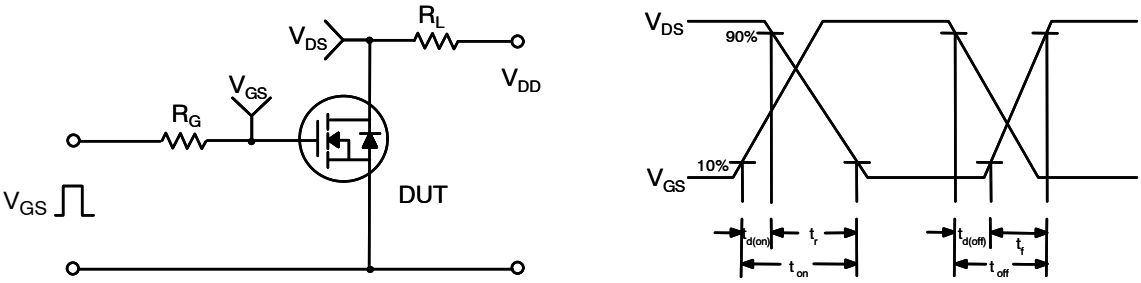

Figure 13. Resistive Switching Test Circuit & Waveforms

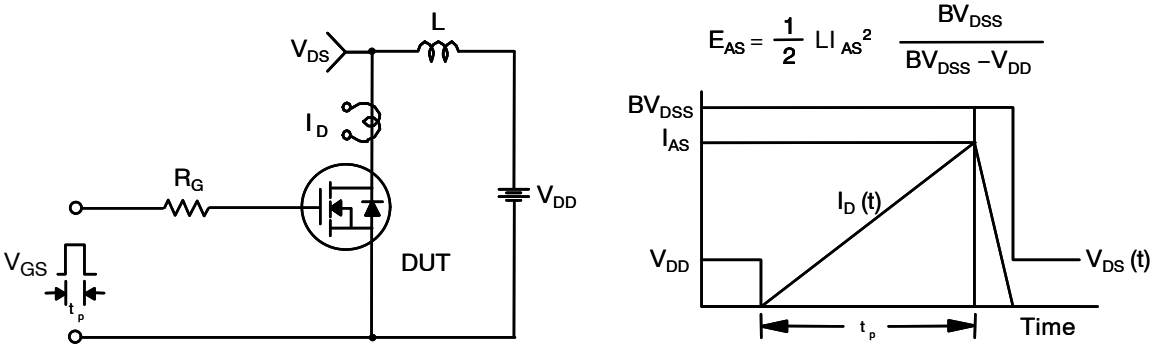

Figure 14. Unclamped Inductive Switching Test Circuit & Waveforms

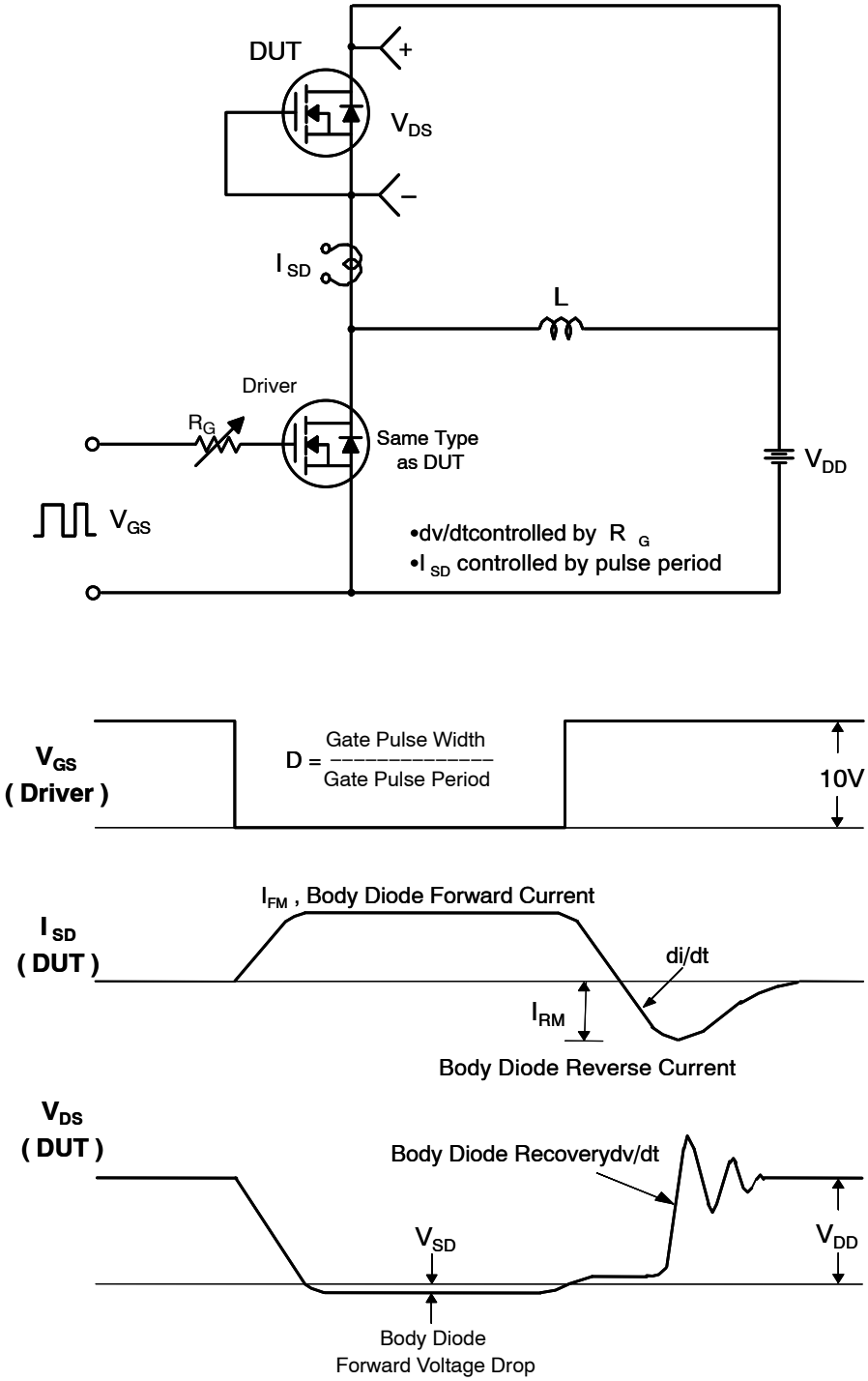

Figure 15. Peak Diode Recovery dv/dt Test Circuit & Waveforms

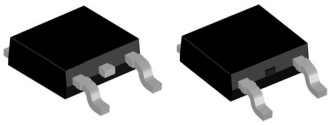

DPAK3 6.10x6.54x2.29, 4.57P
CASE 369AS
ISSUE B

DATE 20 DEC 2023

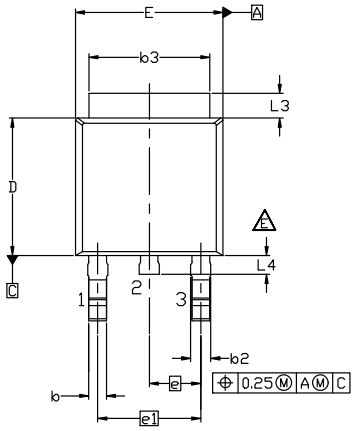

NON-DIODE PRODUCTS VERSION

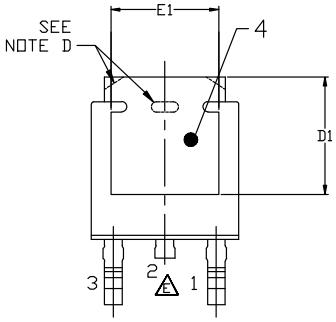

NON-DIODE PRODUCTS VERSION

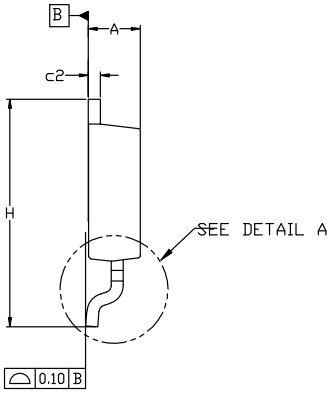

NOTES: UNLESS OTHERWISE SPECIFIED
A) THIS PACKAGE CONFORMS TO JEDEC, TO-252, ISSUE F, VARIATION AA.
B) ALL DIMENSIONS ARE IN MILLIMETERS.
C) DIMENSIONING AND TOLERANCING PER ASME Y14.5M-2018.
D) SUPPLIER DEPENDENT MOLD LOCKING HOLES OR CHAMFERED CORNERS OR EDGE PROTRUSION.
E) FOR DIODE PRODUCTS, L4 IS 0.25 MM MAX PLASTIC BODY STUB WITHOUT CENTER LEAD.
F) DIMENSIONS ARE EXCLUSIVE OF BURRS, MOLD FLASH AND TIE BAR EXTRUSIONS.
G) LAND PATTERN RECOMMENDATION IS BASED ON IPC7351A STD TO228P991X239-3N.

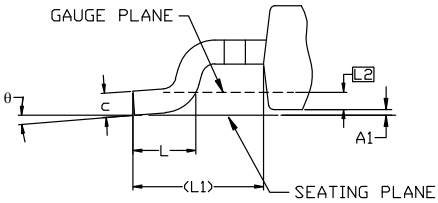

DETAIL A
(ROTATED -90°)
SCALE: 12X

DIM	MILLIMETERS		
	MIN.	NOM.	MAX.
A	2.18	2.29	2.39
A1	0.00	–	0.127
b	0.64	0.77	0.89
b2	0.76	0.95	1.14
b3	5.21	5.34	5.46
c	0.45	0.53	0.61
c2	0.45	0.52	0.58
D	5.97	6.10	6.22
D1	5.21	---	---
E	6.35	6.54	6.73
E1	4.32	---	---
e	2.286 BSC		
e1	4.572 BSC		
H	9.40	9.91	10.41
L	1.40	1.59	1.78
L1	2.90 REF		
L2	0.51 BSC		
L3	0.89	1.08	1.27
L4	---	---	1.02
θ	0°	---	10°

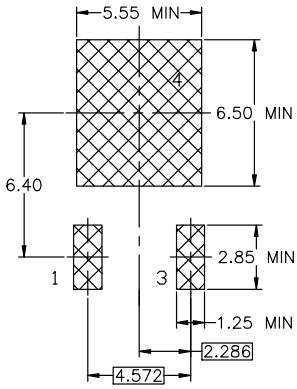

LAND PATTERN RECOMMENDATION

*FOR ADDITIONAL INFORMATION ON OUR PB-FREE STRATEGY AND SOLDERING DETAILS, PLEASE DOWNLOAD THE ON SEMICONDUCTOR SOLDERING AND MOUNTING TECHNIQUES REFERENCE MANUAL, SOLDERRM/D.

GENERIC MARKING DIAGRAM*

*This information is generic. Please refer to device data sheet for actual part marking. Pb-Free indicator, "G" or microdot "▪", may or may not be present. Some products may not follow the Generic Marking.

XXXX = Specific Device Code
A = Assembly Location
Y = Year
WW = Work Week
ZZ = Assembly Lot Code

DOCUMENT NUMBER:	98AON13810G	Electronic versions are uncontrolled except when accessed directly from the Document Repository. Printed versions are uncontrolled except when stamped "CONTROLLED COPY" in red.
DESCRIPTION:	DPAK3 6.10x6.54x2.29, 4.57P	PAGE 1 OF 1

onsemi and onsemi are trademarks of Semiconductor Components Industries, LLC dba **onsemi** or its subsidiaries in the United States and/or other countries. **onsemi** reserves the right to make changes without further notice to any products herein. **onsemi** makes no warranty, representation or guarantee regarding the suitability of its products for any particular purpose, nor does **onsemi** assume any liability arising out of the application or use of any product or circuit, and specifically disclaims any and all liability, including without limitation special, consequential or incidental damages. **onsemi** does not convey any license under its patent rights nor the rights of others.

onsemi, onsemi, and other names, marks, and brands are registered and/or common law trademarks of Semiconductor Components Industries, LLC dba "**onsemi**" or its affiliates and/or subsidiaries in the United States and/or other countries. **onsemi** owns the rights to a number of patents, trademarks, copyrights, trade secrets, and other intellectual property. A listing of **onsemi**'s product/patent coverage may be accessed at www.onsemi.com/site/pdf/Patent−Marking.pdf. **onsemi** reserves the right to make changes at any time to any products or information herein, without notice. The information herein is provided "as−is" and **onsemi** makes no warranty, representation or guarantee regarding the accuracy of the information, product features, availability, functionality, or suitability of its products for any particular purpose, nor does **onsemi** assume any liability arising out of the application or use of any product or circuit, and specifically disclaims any and all liability, including without limitation special, consequential or incidental damages. Buyer is responsible for its products and applications using **onsemi** products, including compliance with all laws, regulations and safety requirements or standards, regardless of any support or applications information provided by **onsemi**. "Typical" parameters which may be provided in **onsemi** data sheets and/or specifications can and do vary in different applications and actual performance may vary over time. All operating parameters, including "Typicals" must be validated for each customer application by customer's technical experts. **onsemi** does not convey any license under any of its intellectual property rights nor the rights of others. **onsemi** products are not designed, intended, or authorized for use as a critical component in life support systems or any FDA Class 3 medical devices or medical devices with a same or similar classification in a foreign jurisdiction or any devices intended for implantation in the human body. Should Buyer purchase or use **onsemi** products for any such unintended or unauthorized application, Buyer shall indemnify and hold **onsemi** and its officers, employees, subsidiaries, affiliates, and distributors harmless against all claims, costs, damages, and expenses, and reasonable attorney fees arising out of, directly or indirectly, any claim of personal injury or death associated with such unintended or unauthorized use, even if such claim alleges that **onsemi** was negligent regarding the design or manufacture of the part. **onsemi** is an Equal Opportunity/Affirmative Action Employer. This literature is subject to all applicable copyright laws and is not for resale in any manner.

ADDITIONAL INFORMATION

TECHNICAL PUBLICATIONS:
Technical Library: www.onsemi.com/design/resources/technical−documentation
onsemi Website: www.onsemi.com

ONLINE SUPPORT: www.onsemi.com/support
For additional information, please contact your local Sales Representative at
www.onsemi.com/support/sales