3.3 V LVTTL/LVCMOS to LVPECL Translator

MC100EPT622

Description

The MC100EPT622 is a 10−Bit LVTTL/LVCMOS to LVPECL translator. Because LVPECL (Positive ECL) levels are used only +3.3 V and ground are required. The device has an OR−ed enable input which can accept either LVPECL (ENPECL) or TTL/LVCMOS inputs (ENTTL). If the inputs are left open, they will default to the enable state. The device design has been optimized for low channel−to−channel skew.

Features

- 450 ps Typical Propagation Delay
- Maximum Frequency > 1.5 GHz Typical
- PECL Mode
- Operating Range: V_{CC} = 3.0 V to 3.8 V with V_{EE} = 0 V
- PNP LVTTL Inputs for Minimal Loading
- Q Output Will Default HIGH with Inputs Open
- The 100 Series Contains Temperature Compensation
- These Devices are Pb−Free, Halogen Free and are RoHS Compliant

MARKING DIAGRAMS*

LQFP−32
FA SUFFIX
CASE 561AB

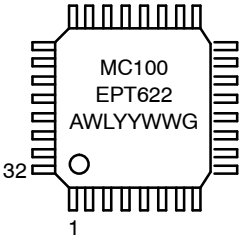

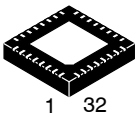

QFN32
MN SUFFIX
CASE 488AM

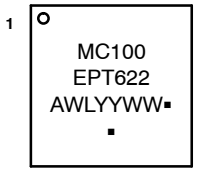

A	= Assembly Location
WL	= Wafer Lot
YY	= Year
WW	= Work Week
G or ▪	= Pb−Free Package

(Note: Microdot may be in either location)

*For additional marking information, refer to Application Note AND8002/D.

Table 1. TRUTH TABLE

ENPECL	ENTTL	D	Q
H	X	H	H
H	X	L	L
X	H	H	H
X	H	L	L
L	L	X	L

ORDERING INFORMATION

See detailed ordering and shipping information in the package dimensions section on page 6 of this data sheet.

© Semiconductor Components Industries, LLC, 2011

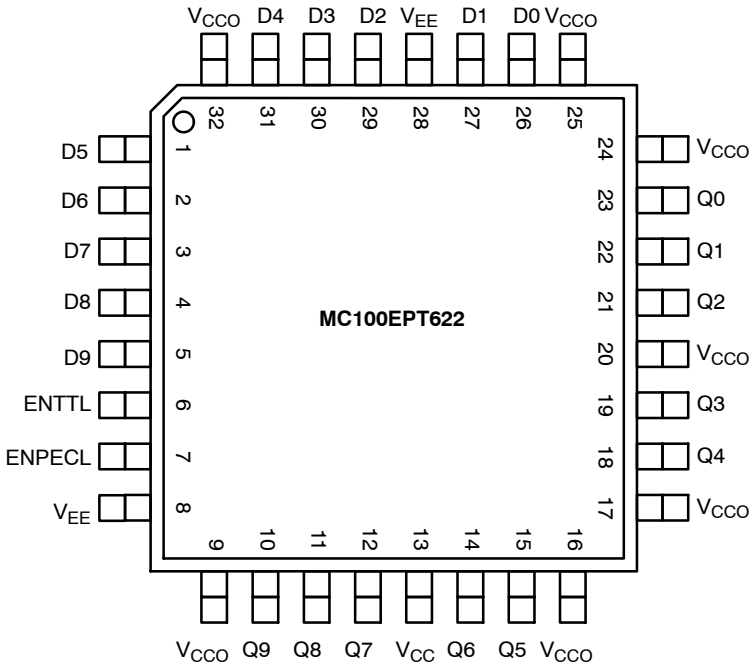

Warning: All V_{CC}, V_{CCO}, and V_{EE} pins must be externally connected to Power Supply to guarantee proper operation.

Figure 1. 32−Lead LQFP Pinout (Top View)

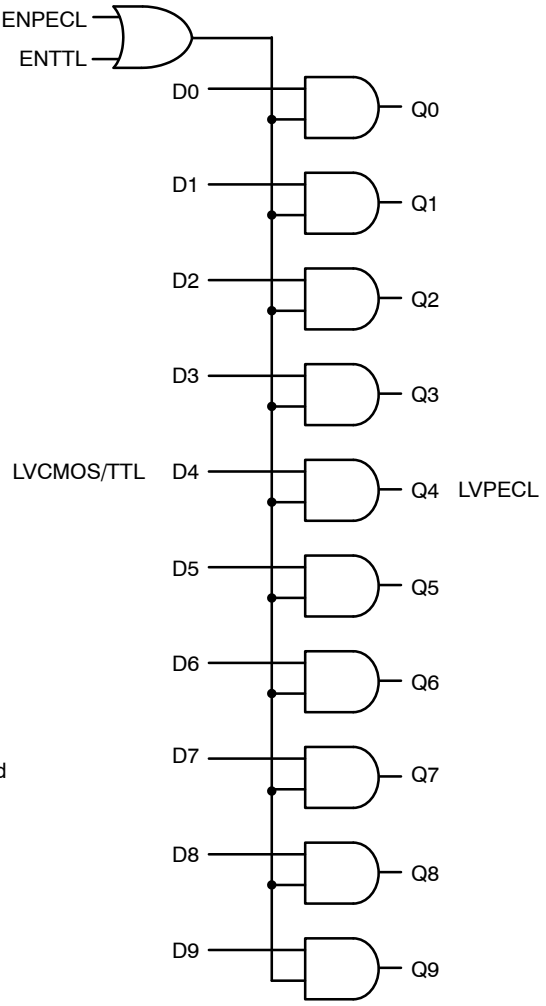

Figure 2. Logic Symbol

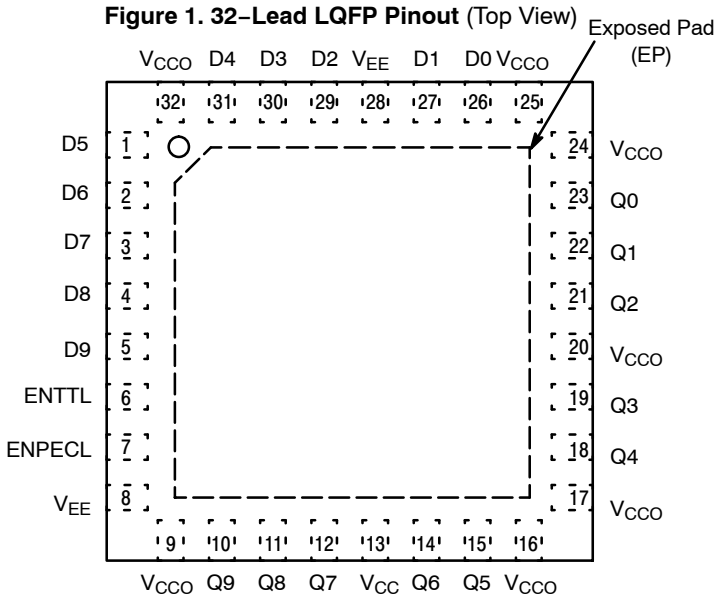

Figure 3. 32−Lead QFN Pinout (Top View)

Table 1. PIN DESCRIPTION

Pin	Function
D0:9	Data Input (TTL)
Q0:9	Data Outputs (PECL)
ENTTL	Enable Control (TTL)
ENPECL	Enable Control (PECL)
V_{CC}, V_{CCO}	Positive Supply
V_{EE}	Ground
EP	The exposed pad (EP) on the QFN−32 package bottom is thermally connected to the die for improved heat transfer out of the package. THe exposed pad must be attached to a heat−sinking conduit. The pad is electrically connected to V_{EE}.

Table 2. ATTRIBUTES

Characteristics	Value
Internal Input Pulldown Resistor	N/A
Internal Input Pullup Resistor	N/A
ESD Protection Human Body Model Machine Model Charged Device Model	 > 2 kV > 150 V > 2 kV
Moisture Sensitivity, Indefinite Time Out of Drypack	Pb−Free Pkg
LQFP−32 QFN−32	Level 2 Level 1
Flammability Rating Oxygen Index: 28 to 34	 UL 94 V−0 @ 0.125 in
Transistor Count	596 Devices
Meets or exceeds JEDEC Spec EIA/JESD78 IC Latchup Test	

Table 3. MAXIMUM RATINGS

Symbol	Parameter	Condition 1	Condition 2	Rating	Unit
V_{CC}	Power Supply	V_{EE} = 0 V		5	V
V_I	Input Voltage	V_{EE} = 0 V	$V_I \le V_{CC}$	5 to 0	V
I_{out}	Output Current	Continuous Surge		50 100	mA mA
T_A	Operating Temperature Range			−40 to +85	°C
T_{stg}	Storage Temperature Range			−65 to +150	°C
θ_{JA}	Thermal Resistance (Junction−to−Ambient)	0 lfpm 500 lfpm	32 LQFP 32 LQFP	80 55	°C/W °C/W
θ_{JC}	Thermal Resistance (Junction−to−Case)	Standard Board	32 LQFP	12 to 17	°C/W
θ_{JA}	Thermal Resistance (Junction−to−Ambient)	0 lfpm 500 lfpm	QFN−32 QFN−32	31 27	°C/W °C/W
θ_{JC}	Thermal Resistance (Junction−to−Case)	2S2P	QFN−32	12	°C/W
T_{sol}	Wave Solder			265	°C

Stresses exceeding those listed in the Maximum Ratings table may damage the device. If any of these limits are exceeded, device functionality should not be assumed, damage may occur and reliability may be affected.

Table 4. TTL INPUT DC CHARACTERISTICS (V_{CC} = 3.3 V, GND= 0.0 V, T_A = −40°C to 85°C)

Symbol	Characteristic	Condition	Min	Typ	Max	Unit
I_{IH}	Input HIGH Current	V_{IN} = 2.7 V			25	μA
I_{IHH}	Input HIGH Current MAX	$V_{IN} = V_{CC}$			100	μA
I_{IL}	Input LOW Current	V_{IN} = 0.5 V			−0.6	mA
V_{IK}	Input Clamp Voltage	I_{IN} = −18 mA	−1.2	−0.9		V
V_{IH}	Input HIGH Voltage		2.0			V
V_{IL}	Input LOW Voltage				0.8	V

NOTE: Device will meet the specifications after thermal equilibrium has been established when mounted in a test socket or printed circuit board with maintained transverse airflow greater than 500 lfpm.

Table 5. PECL INPUT DC CHARACTERISTICS V_{CC} = 3.3 V, GND= 0.0 V, T_A = −40°C to 85°C

Symbol	Characteristic	Condition	Min	Typ	Max	Unit
I_{IH}	Input HIGH Current	V_{IN} = 2420 mV			150	μA
I_{IL}	Input LOW Current	V_{IN} = 1490 mV			200	μA
V_{IH}	Input HIGH Voltage		2075		2420	mV
V_{IL}	Input LOW Voltage		1490		1675	mV

NOTE: Device will meet the specifications after thermal equilibrium has been established when mounted in a test socket or printed circuit board with maintained transverse airflow greater than 500 lfpm.

Table 6. PECL OUTPUT DC CHARACTERISTICS V_{CC} = 3.3 V, GND = 0.0 V (Note 1)

Symbol	Characteristic	−40°C			25°C			85°C			Unit
		Min	Typ	Max	Min	Typ	Max	Min	Typ	Max	
I_{EE}	Power Supply Current	85	115	145	90	120	155	95	130	155	mA
V_{OH}	Output High Voltage (Note 2)	2155	2280	2405	2155	2280	2405	2155	2280	2405	mV
V_{OL}	Output Low Voltage (Note 2)	1355	1520	1700	1355	1520	1700	1355	1520	1700	mV

NOTE: Device will meet the specifications after thermal equilibrium has been established when mounted in a test socket or printed circuit board with maintained transverse airflow greater than 500 lfpm.

1. Input and output parameters vary 1:1 with V_{CC}.
2. All loading with 50 Ω to V_{CC}−2.0 V.

Table 7. AC CHARACTERISTICS V_{CC} = 3.0 V to 3.8 V (Note 3)

Symbol	Characteristic	−40°C			25°C			85°C			Unit
		Min	Typ	Max	Min	Typ	Max	Min	Typ	Max	
f_{max}	Maximum Frequency (See Figure 4)	1.0	1.5		1.0	1.5		1.0	1.5		GHz
t_{PLH}, t_{PHL}	Propagation Delay to Output (Figure 5, Note 4)										ps
	D to Q	100	450	800	100	500	875	100	500	800	
	ENPECL to Q	150	500	875	150	500	875	200	550	925	
	ENTTL to Q	300	450	800	300	500	500	300	500	800	
t_{JITTER}	Random Clock Jitter (RMS) (See Figure 4)		0.7	3.0		0.7	3.0		0.7	3.0	ps
t_r / t_f	Output Rise/Fall Times (20% − 80%)	100	200	450	100	200	250	100	200	300	ps
T_{SKEW}	Duty Cycle Skew (Note 5)										ps
	D to Q										
	Channel 0−7		120	375		120	375		120	375	
	Channel 8−9		200	775		200	775		200	775	
	ENPECL to Q		120	400		120	400		120	400	
	ENTTL to Q		100	275		100	275		100	275	

NOTE: Device will meet the specifications after thermal equilibrium has been established when mounted in a test socket or printed circuit board with maintained transverse airflow greater than 500 lfpm.

3. Measured using a 2.4 V source, 50% duty cycle clock source. All loading with 50 Ω to V_{CC}−2.0 V.
4. 1.5 V to 50% point of the output.
5. Duty cycle skew $|t_{PLH} - t_{PHL}|$ on the specific path.

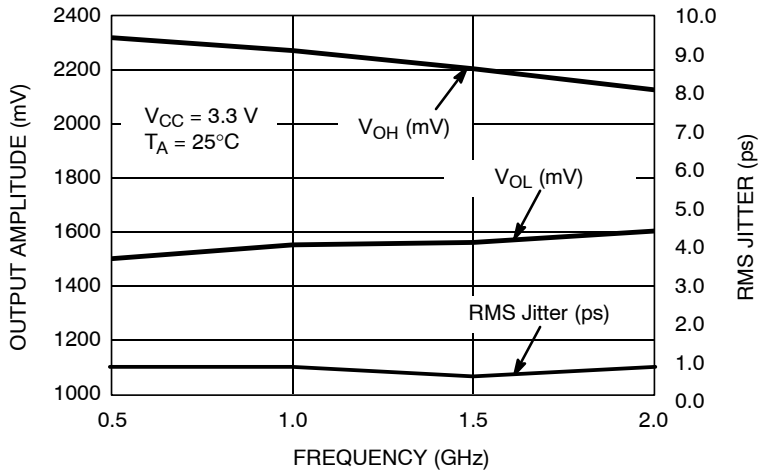

Figure 4. Average Output Amplitude/Jitter (3.3 V, 25°C)

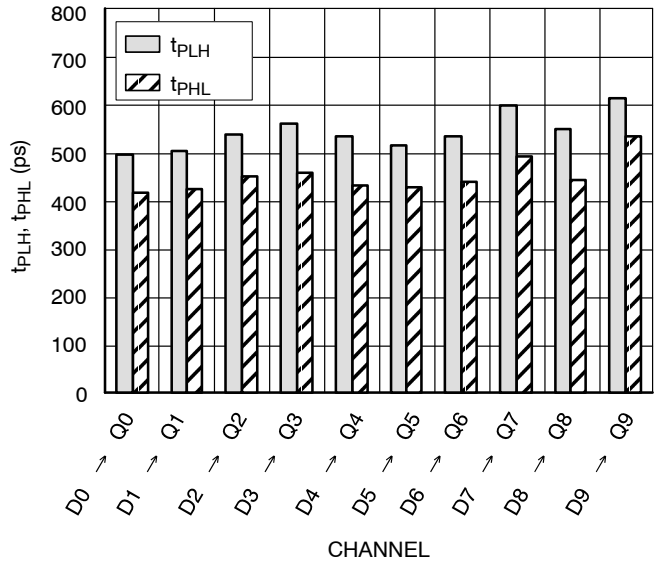

Figure 5. Average Propagation Delay (3.3 V, 25°C)

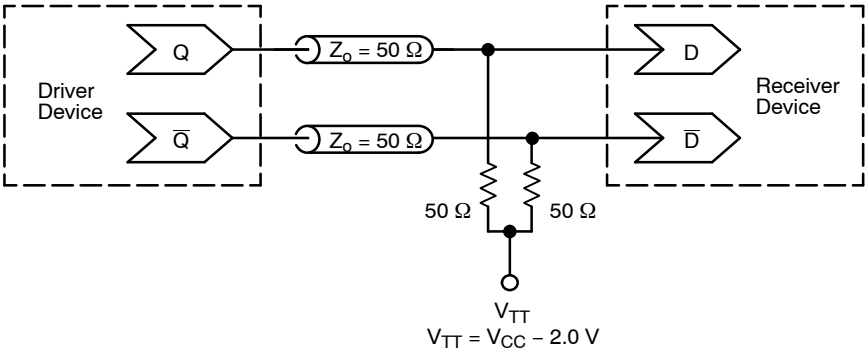

Figure 6. Typical Termination for Output Driver and Device Evaluation (See Application Note AND8020/D – Termination of ECL Logic Devices.)

ORDERING INFORMATION

Device	Package	Shipping
MC100EPT622FAG	LQFP−32 (Pb−Free)	250 Units / Tray
MC100EPT622MNG	QFN32 (Pb−Free)	74 Units / Rail

Resource Reference of Application Notes

AN1405/D – ECL Clock Distribution Techniques

AN1406/D – Designing with PECL (ECL at +5.0 V)

AN1503/D – ECLinPS™ I/O SPiCE Modeling Kit

AN1504/D – Metastability and the ECLinPS Family

AN1568/D – Interfacing Between LVDS and ECL

AN1672/D – The ECL Translator Guide

AND8001/D – Odd Number Counters Design

AND8002/D – Marking and Date Codes

AND8020/D – Termination of ECL Logic Devices

AND8066/D – Interfacing with ECLinPS

AND8090/D – AC Characteristics of ECL Devices

ECLinPS is a trademark of Semiconductor Components Industries, LLC dba “**onsemi**” or its affiliates and/or subsidiaries in the United States and/or other countries.

QFN32 5x5, 0.5P
CASE 488AM
ISSUE A

DATE 23 OCT 2013

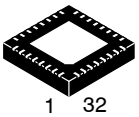

SCALE 2:1

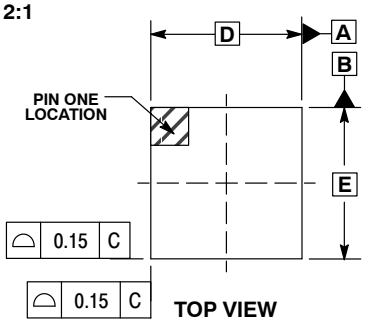

TOP VIEW

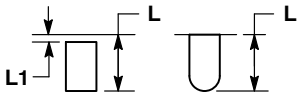

DETAIL A
ALTERNATE TERMINAL CONSTRUCTIONS

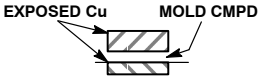

DETAIL B
ALTERNATE CONSTRUCTION

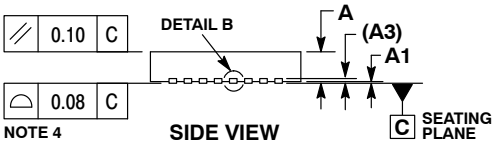

SIDE VIEW

NOTES:
1. DIMENSIONS AND TOLERANCING PER ASME Y14.5M, 1994.
2. CONTROLLING DIMENSION: MILLIMETERS.
3. DIMENSION b APPLIES TO PLATED TERMINAL AND IS MEASURED BETWEEN 0.15 AND 0.30MM FROM THE TERMINAL TIP.
4. COPLANARITY APPLIES TO THE EXPOSED PAD AS WELL AS THE TERMINALS.

	MILLIMETERS	
DIM	MIN	MAX
A	0.80	1.00
A1	---	0.05
A3	0.20 REF	
b	0.18	0.30
D	5.00 BSC	
D2	2.95	3.25
E	5.00 BSC	
E2	2.95	3.25
e	0.50 BSC	
K	0.20	---
L	0.30	0.50
L1	---	0.15

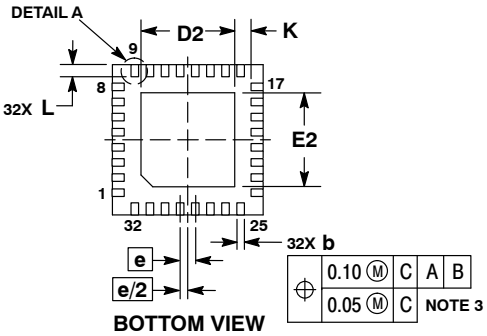

BOTTOM VIEW

GENERIC MARKING DIAGRAM*

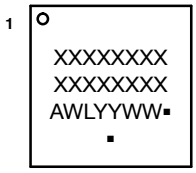

XXXXX = Specific Device Code
A = Assembly Location
WL = Wafer Lot
YY = Year
WW = Work Week
▪ = Pb−Free Package

(Note: Microdot may be in either location)

*This information is generic. Please refer to device data sheet for actual part marking.
Pb−Free indicator, "G" or microdot " ▪", may or may not be present.

RECOMMENDED SOLDERING FOOTPRINT*

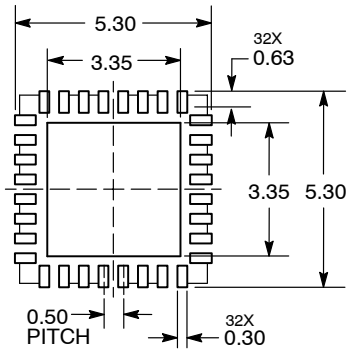

DIMENSION: MILLIMETERS

*For additional information on our Pb−Free strategy and soldering details, please download the ON Semiconductor Soldering and Mounting Techniques Reference Manual, SOLDERRM/D.

DOCUMENT NUMBER:	98AON20032D	Electronic versions are uncontrolled except when accessed directly from the Document Repository. Printed versions are uncontrolled except when stamped "CONTROLLED COPY" in red.
DESCRIPTION:	QFN32 5x5 0.5P	PAGE 1 OF 1

onsemi and onsemi are trademarks of Semiconductor Components Industries, LLC dba **onsemi** or its subsidiaries in the United States and/or other countries. **onsemi** reserves the right to make changes without further notice to any products herein. **onsemi** makes no warranty, representation or guarantee regarding the suitability of its products for any particular purpose, nor does **onsemi** assume any liability arising out of the application or use of any product or circuit, and specifically disclaims any and all liability, including without limitation special, consequential or incidental damages. **onsemi** does not convey any license under its patent rights nor the rights of others.

onsemi, onsemi, and other names, marks, and brands are registered and/or common law trademarks of Semiconductor Components Industries, LLC dba "**onsemi**" or its affiliates and/or subsidiaries in the United States and/or other countries. **onsemi** owns the rights to a number of patents, trademarks, copyrights, trade secrets, and other intellectual property. A listing of **onsemi**'s product/patent coverage may be accessed at www.onsemi.com/site/pdf/Patent−Marking.pdf. **onsemi** reserves the right to make changes at any time to any products or information herein, without notice. The information herein is provided "as−is" and **onsemi** makes no warranty, representation or guarantee regarding the accuracy of the information, product features, availability, functionality, or suitability of its products for any particular purpose, nor does **onsemi** assume any liability arising out of the application or use of any product or circuit, and specifically disclaims any and all liability, including without limitation special, consequential or incidental damages. Buyer is responsible for its products and applications using **onsemi** products, including compliance with all laws, regulations and safety requirements or standards, regardless of any support or applications information provided by **onsemi**. "Typical" parameters which may be provided in **onsemi** data sheets and/or specifications can and do vary in different applications and actual performance may vary over time. All operating parameters, including "Typicals" must be validated for each customer application by customer's technical experts. **onsemi** does not convey any license under any of its intellectual property rights nor the rights of others. **onsemi** products are not designed, intended, or authorized for use as a critical component in life support systems or any FDA Class 3 medical devices or medical devices with a same or similar classification in a foreign jurisdiction or any devices intended for implantation in the human body. Should Buyer purchase or use **onsemi** products for any such unintended or unauthorized application, Buyer shall indemnify and hold **onsemi** and its officers, employees, subsidiaries, affiliates, and distributors harmless against all claims, costs, damages, and expenses, and reasonable attorney fees arising out of, directly or indirectly, any claim of personal injury or death associated with such unintended or unauthorized use, even if such claim alleges that **onsemi** was negligent regarding the design or manufacture of the part. **onsemi** is an Equal Opportunity/Affirmative Action Employer. This literature is subject to all applicable copyright laws and is not for resale in any manner.

ADDITIONAL INFORMATION

TECHNICAL PUBLICATIONS:
Technical Library: www.onsemi.com/design/resources/technical−documentation
onsemi Website: www.onsemi.com

ONLINE SUPPORT: www.onsemi.com/support
For additional information, please contact your local Sales Representative at
www.onsemi.com/support/sales