Quad Analog Switch/ Multiplexer/Demultiplexer

High−Performance Silicon−Gate CMOS

MC74LVX4066

The MC74LVX4066 utilizes silicon−gate CMOS technology to achieve fast propagation delays, low ON resistances, and low OFF−channel leakage current. This bilateral switch/multiplexer/demultiplexer controls analog and digital voltages that may vary across the full power−supply range (from V_{CC} to GND).

The LVX4066 is identical in pinout to the metal−gate CMOS MC14066 and the high−speed CMOS HC4066A. Each device has four independent switches. The device has been designed so that the ON resistances (R_{ON}) are much more linear over input voltage than R_{ON} of metal−gate CMOS analog switches.

The ON/OFF control inputs are compatible with standard CMOS outputs; with pull−up resistors, they are compatible with LSTTL outputs.

Features

- Fast Switching and Propagation Speeds
- High ON/OFF Output Voltage Ratio
- Low Crosstalk Between Switches
- Diode Protection on All Inputs/Outputs
- Wide Power−Supply Voltage Range (V_{CC} − GND) = 2.0 to 6.0 Volts
- Analog Input Voltage Range (V_{CC} − GND) = 2.0 to 6.0 Volts
- Improved Linearity and Lower ON Resistance over Input Voltage than the MC14016 or MC14066
- Low Noise
- Chip Complexity: 44 FETs or 11 Equivalent Gates
- These Devices are Pb−Free and are RoHS Compliant

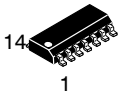

SOIC−14
D SUFFIX
CASE 751A

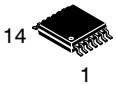

TSSOP−14
DT SUFFIX
CASE 948G

MARKING DIAGRAMS

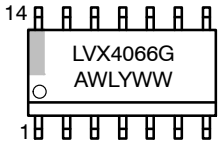

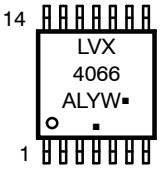

LVX4066	= Specific Device Code
A	= Assembly Location
WL, L	= Wafer Lot
Y	= Year
WW, W	= Work Week
G or ▪	= Pb−Free Package

(Note: Microdot may be in either location)

ORDERING INFORMATION

Device	Package	Shipping†
MC74LVX4066DR2G	SOIC−14 (Pb−Free)	2500 Tape & Reel
MC74LVX4066DTR2G	TSSOP−14* (Pb−Free)	2500 Tape & Reel

†For information on tape and reel specifications, including part orientation and tape sizes, please refer to our Tape and Reel Packaging Specifications Brochure, BRD8011/D.
*This package is inherently Pb−Free.

© Semiconductor Components Industries, LLC, 2011

LOGIC DIAGRAM

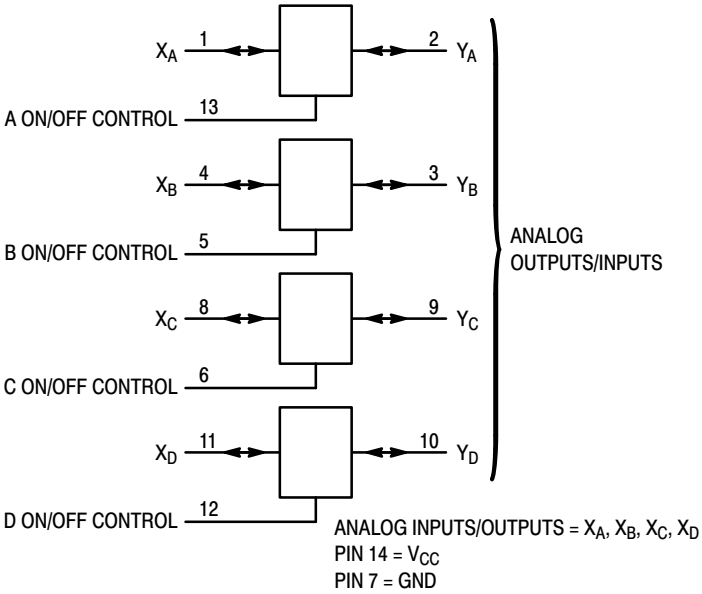

PIN CONNECTION (Top View)

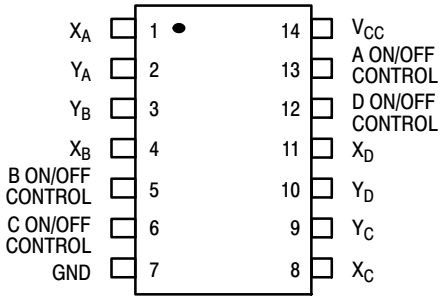

FUNCTION TABLE

On/Off Control Input	State of Analog Switch
L	Off
H	On

MAXIMUM RATINGS

Symbol	Parameter	Value	Unit
V_{CC}	Positive DC Supply Voltage (Referenced to GND)	– 0.5 to + 7.0	V
V_{IS}	Analog Input Voltage (Referenced to GND)	– 0.5 to V_{CC} + 0.5	V
V_{in}	Digital Input Voltage (Referenced to GND)	– 0.5 to V_{CC} + 0.5	V
I_{in}	DC Current Into or Out of ON/OFF Control Pins	± 20	mA
I_s	DC Current Into or Out of Switch Pins	± 20	mA
P_D	Power Dissipation in Still Air, SOIC Package† TSSOP Package†	500 450	mW
T_{stg}	Storage Temperature	– 65 to + 150	°C
T_L	Lead Temperature, 1 mm from Case for 10 Seconds	260	°C

Stresses exceeding those listed in the Maximum Ratings table may damage the device. If any of these limits are exceeded, device functionality should not be assumed, damage may occur and reliability may be affected.

†Derating — SOIC Package: – 7 mW/°C from 65° to 125°C
TSSOP Package: – 6.1 mW/°C from 65° to 125°C

This device contains protection circuitry to guard against damage due to high static voltages or electric fields. However, precautions must be taken to avoid applications of any voltage higher than maximum rated voltages to this high–impedance circuit. For proper operation, V_{in} and V_{out} should be constrained to the range GND ≤ (V_{in} or V_{out}) ≤ V_{CC}.

Unused inputs must always be tied to an appropriate logic voltage level (e.g., either GND or V_{CC}). Unused outputs must be left open. I/O pins must be connected to a properly terminated line or bus.

RECOMMENDED OPERATING CONDITIONS

Symbol	Parameter	Min	Max	Unit
V_{CC}	Positive DC Supply Voltage (Referenced to GND)	2.0	6.0	V
V_{IS}	Analog Input Voltage (Referenced to GND)	GND	V_{CC}	V
V_{in}	Digital Input Voltage (Referenced to GND)	GND	V_{CC}	V
V_{IO}*	Static or Dynamic Voltage Across Switch	–	1.2	V
T_A	Operating Temperature, All Package Types	– 55	+ 85	°C
t_r, t_f	Input Rise and Fall Time, ON/OFF Control Inputs (Figure 10) V_{CC} = 3.3 V ± 0.3 V V_{CC} = 5.0 V ± 0.5 V	0 0	100 20	ns/V

*For voltage drops across the switch greater than 1.2 V (switch on), excessive V_{CC} current may be drawn; i.e., the current out of the switch may contain both V_{CC} and switch input components. The reliability of the device will be unaffected unless the Maximum Ratings are exceeded.

DC ELECTRICAL CHARACTERISTIC Digital Section (Voltages Referenced to GND)

Symbol	Parameter	Test Conditions	V_{CC} V	Guaranteed Limit – 55 to 25°C	Guaranteed Limit ≤ 85°C	Guaranteed Limit ≤ 125°C	Unit
V_{IH}	Minimum High–Level Voltage ON/OFF Control Inputs (Note 1)	R_{on} = Per Spec	2.0 3.0 4.5 5.5	1.5 2.1 3.15 3.85	1.5 2.1 3.15 3.85	1.5 2.1 3.15 3.85	V
V_{IL}	Maximum Low–Level Voltage ON/OFF Control Inputs (Note 1)	R_{on} = Per Spec	2.0 3.0 4.5 5.5	0.5 0.9 1.35 1.65	0.5 0.9 1.35 1.65	0.5 0.9 1.35 1.65	V
I_{in}	Maximum Input Leakage Current ON/OFF Control Inputs	V_{in} = V_{CC} or GND	5.5V	± 0.1	± 1.0	± 1.0	μA
I_{CC}	Maximum Quiescent Supply Current (per Package)	V_{in} = V_{CC} or GND V_{IO} = 0 V	5.5	4.0	40	160	μA

1. Specifications are for design target only. Not final specification limits.

DC ELECTRICAL CHARACTERISTICS Analog Section (Voltages Referenced to GND)

Symbol	Parameter	Test Conditions	V_{CC} V	Guaranteed Limit – 55 to 25°C	≤ 85°C	≤ 125°C	Unit
R_{on}	Maximum "ON" Resistance	$V_{in} = V_{IH}$ $V_{IS} = V_{CC}$ to GND $\|I_S\| \leq 10$ mA (Figures 1, 2)	2.0† 3.0 4.5 5.5	– 40 25 20	– 45 30 25	– 50 35 30	Ω
		$V_{in} = V_{IH}$ $V_{IS} = V_{CC}$ or GND (Endpoints) $\|I_S\| \leq 10$ mA (Figures 1, 2)	2.0 3.0 4.5 5.5	– 30 25 20	– 35 30 25	– 40 35 30	
ΔR_{on}	Maximum Difference in "ON" Resistance Between Any Two Channels in the Same Package	$V_{in} = V_{IH}$ $V_{IS} = 1/2\ (V_{CC} - GND)$ $I_S \leq 2.0$ mA	3.0 4.5 5.5	15 10 10	20 12 12	25 15 15	Ω
I_{off}	Maximum Off–Channel Leakage Current, Any One Channel	$V_{in} = V_{IL}$ $V_{IO} = V_{CC}$ or GND Switch Off (Figure 3)	5.5	0.1	0.5	1.0	μA
I_{on}	Maximum On–Channel Leakage Current, Any One Channel	$V_{in} = V_{IH}$ $V_{IS} = V_{CC}$ or GND (Figure 4)	5.5	0.1	0.5	1.0	μA

†At supply voltage (V_{CC}) approaching 2 V the analog switch–on resistance becomes extremely non–linear. Therefore, for low–voltage operation, it is recommended that these devices only be used to control digital signals (See Figure 1a).

AC ELECTRICAL CHARACTERISTICS (C_L = 50 pF, ON/OFF Control Inputs: $t_r = t_f$ = 6 ns)

Symbol	Parameter	V_{CC} V	Guaranteed Limit – 55 to 25°C	≤ 85°C	≤ 125°C	Unit
t_{PLH}, t_{PHL}	Maximum Propagation Delay, Analog Input to Analog Output (Figures 8 and 9)	2.0 3.0 4.5 5.5	4.0 3.0 1.0 1.0	6.0 5.0 2.0 2.0	8.0 6.0 2.0 2.0	ns
t_{PLZ}, t_{PHZ}	Maximum Propagation Delay, ON/OFF Control to Analog Output (Figures 10 and 11)	2.0 3.0 4.5 5.5	30 20 15 15	35 25 18 18	40 30 22 20	ns
t_{PZL}, t_{PZH}	Maximum Propagation Delay, ON/OFF Control to Analog Output (Figures 10 and 1 1)	2.0 3.0 4.5 5.5	20 12 8.0 8.0	25 14 10 10	30 15 12 12	ns
C	Maximum Capacitance ON/OFF Control Input	–	10	10	10	pF
	Control Input = GND Analog I/O Feedthrough	– –	35 1.0	35 1.0	35 1.0	
			Typical @ 25°C, V_{CC} = 5.0 V			
C_{PD}	Power Dissipation Capacitance (Per Switch) (Figure 13)*		15			pF

* Used to determine the no–load dynamic power consumption: $P_D = C_{PD} V_{CC}^2 f + I_{CC} V_{CC}$.

ADDITIONAL APPLICATION CHARACTERISTICS (Voltages Referenced to GND Unless Noted)

Symbol	Parameter	Test Conditions	V_{CC} V	Limit* 25°C	Unit
BW	Maximum On−Channel Bandwidth or Minimum Frequency Response (Figure 5)	f_{in} = 1 MHz Sine Wave Adjust f_{in} Voltage to Obtain 0 dBm at V_{OS} Increase f_{in} Frequency Until dB Meter Reads − 3 dB R_L = 50 Ω, C_L = 10 pF	4.5 5.5	150 160	MHz
–	Off−Channel Feedthrough Isolation (Figure 6)	$f_{in} \equiv$ Sine Wave Adjust f_{in} Voltage to Obtain 0 dBm at V_{IS} f_{in} = 10 kHz, R_L = 600 Ω, C_L = 50 pF	4.5 5.5	− 50 − 50	dB
		f_{in} = 1.0 MHz, R_L = 50 Ω, C_L = 10 pF	4.5 5.5	− 37 − 37	
–	Feedthrough Noise, Control to Switch (Figure 7)	$V_{in} \leq$ 1 MHz Square Wave ($t_r = t_f$ = 6 ns) Adjust R_L at Setup so that I_S = 0 A R_L = 600 Ω, C_L = 50 pF	4.5 5.5	100 200	mV_{PP}
		R_L = 10 kΩ, C_L = 10 pF	4.5 5.5	50 100	
–	Crosstalk Between Any Two Switches (Figure 12)	$f_{in} \equiv$ Sine Wave Adjust f_{in} Voltage to Obtain 0 dBm at V_{IS} f_{in} = 10 kHz, R_L = 600 Ω, C_L = 50 pF	4.5 5.5	− 70 − 70	dB
		f_{in} = 1.0 MHz, R_L = 50 Ω, C_L = 10 pF	4.5 5.5	− 80 − 80	
THD	Total Harmonic Distortion (Figure 14)	f_{in} = 1 kHz, R_L = 10 kΩ, C_L = 50 pF $THD = THD_{Measured} - THD_{Source}$ V_{IS} = 4.0 V_{PP} sine wave V_{IS} = 5.0 V_{PP} sine wave	4.5 5.5	0.10 0.06	%

*Guaranteed limits not tested. Determined by design and verified by qualification.

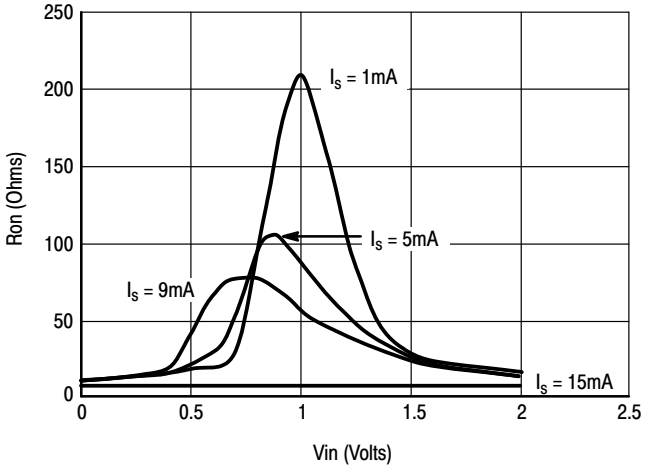

Figure 1a. Typical On Resistance, V_{CC} = 2.0 V, T = 25°C

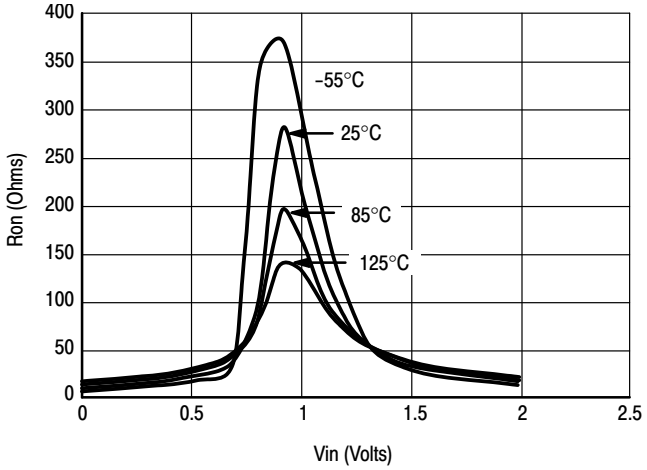

Figure 1b. Typical On Resistance, V_{CC} = 2.0 V

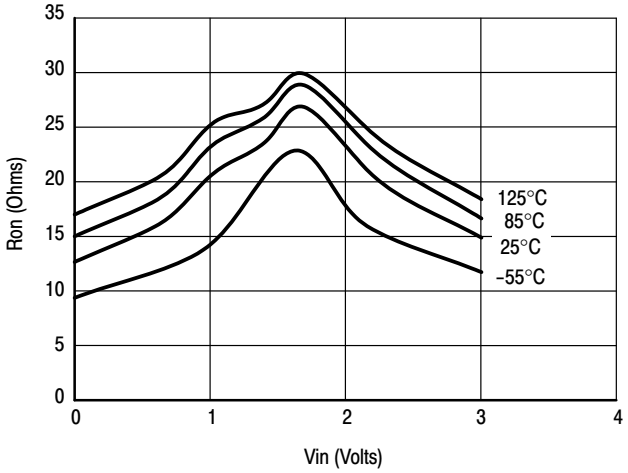

Figure 1c. Typical On Resistance, V_{CC} = 3.0 V

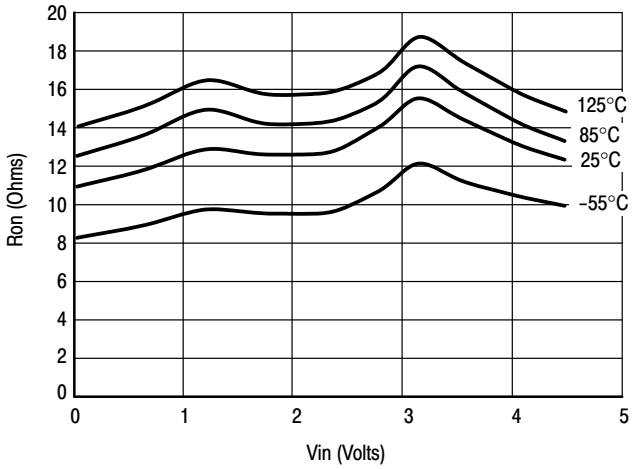

Figure 1d. Typical On Resistance, V_{CC} = 4.5 V

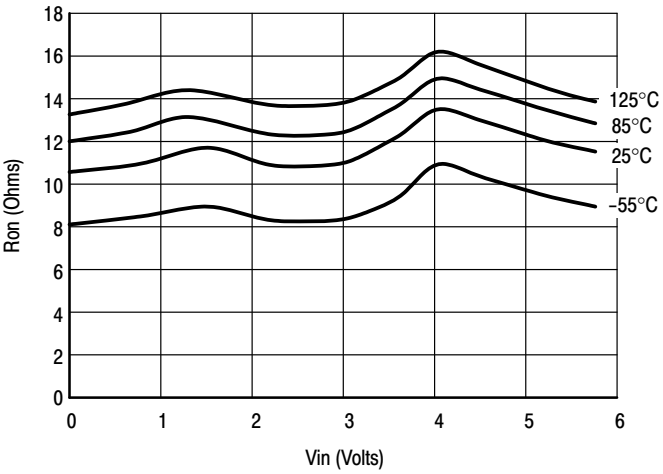

Figure 1e. Typical On Resistance, V_{CC} = 5.5 V

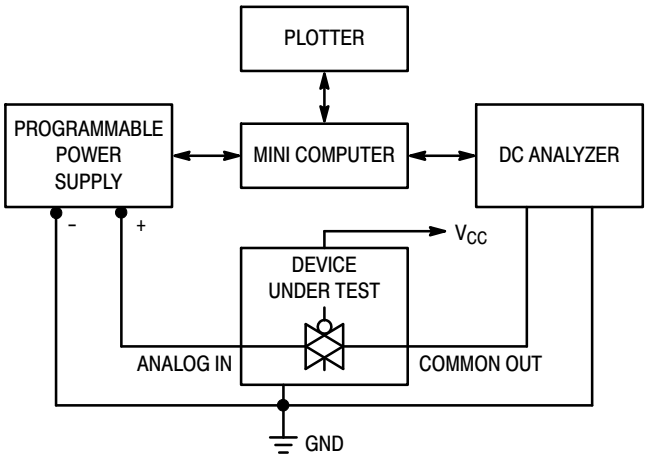

Figure 2. On Resistance Test Set−Up

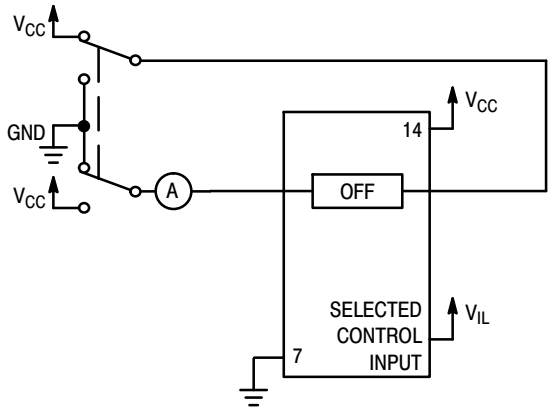

Figure 3. Maximum Off Channel Leakage Current, Any One Channel, Test Set−Up

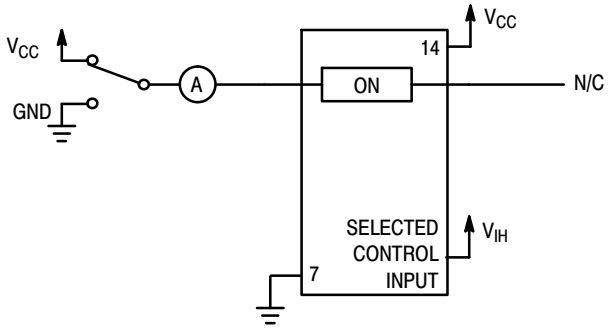

Figure 4. Maximum On Channel Leakage Current, Test Set−Up

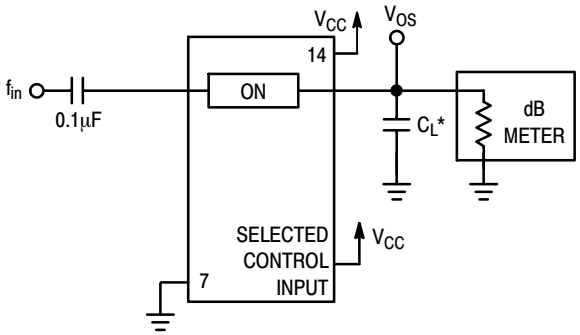

*Includes all probe and jig capacitance.

Figure 5. Maximum On−Channel Bandwidth Test Set−Up

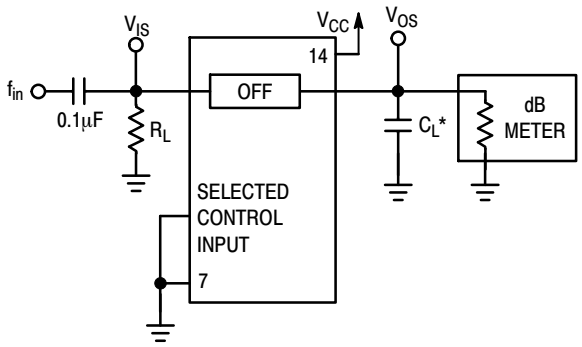

*Includes all probe and jig capacitance.

Figure 6. Off−Channel Feedthrough Isolation, Test Set−Up

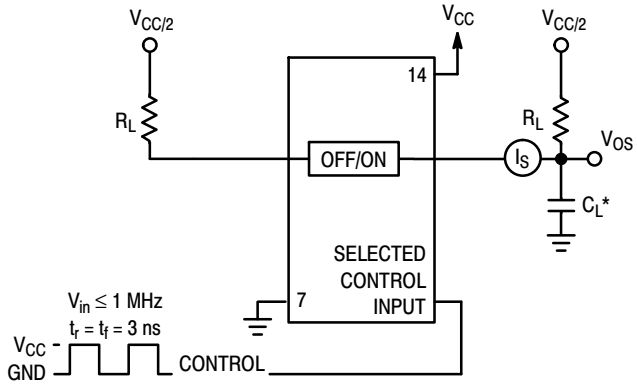

*Includes all probe and jig capacitance.

Figure 7. Feedthrough Noise, ON/OFF Control to Analog Out, Test Set−Up

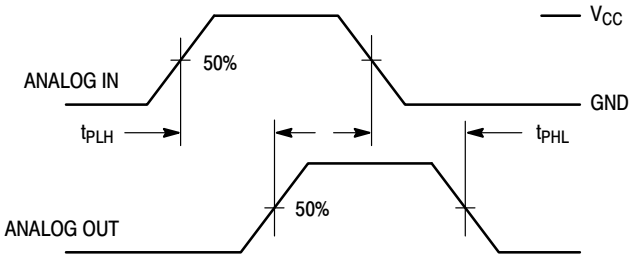

Figure 8. Propagation Delays, Analog In to Analog Out

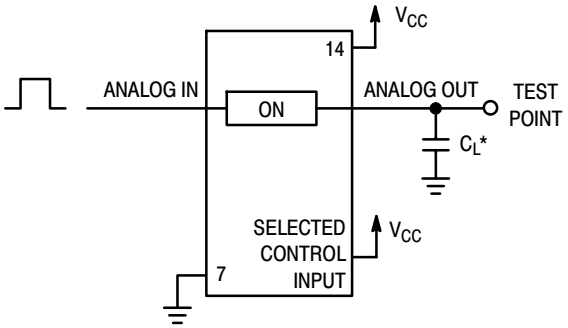

*Includes all probe and jig capacitance.

Figure 9. Propagation Delay Test Set−Up

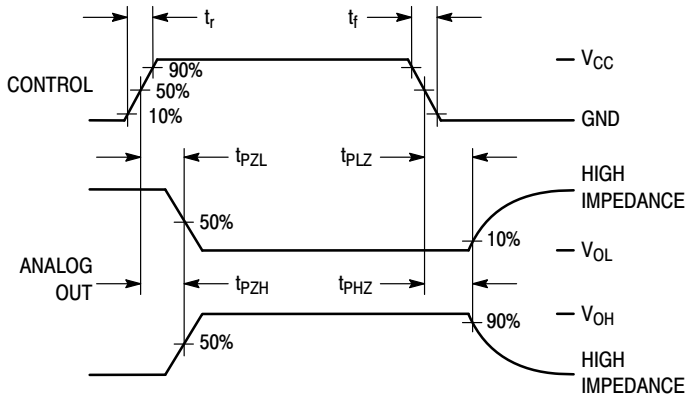

Figure 10. Propagation Delay, ON/OFF Control to Analog Out

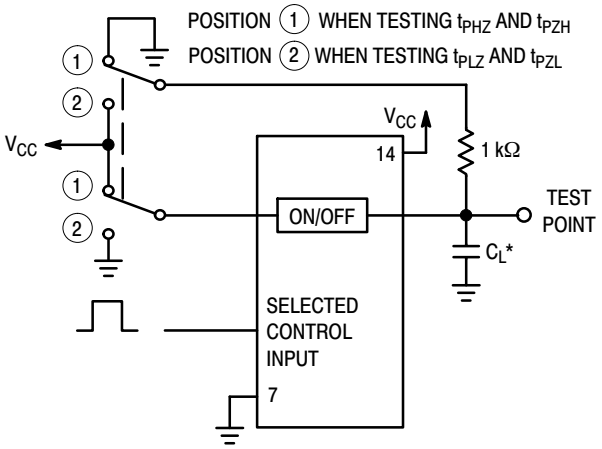

*Includes all probe and jig capacitance.

Figure 11. Propagation Delay Test Set−Up

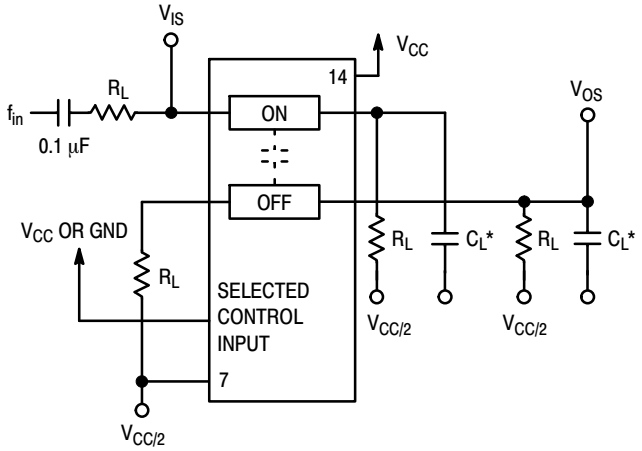

*Includes all probe and jig capacitance.

Figure 12. Crosstalk Between Any Two Switches, Test Set−Up

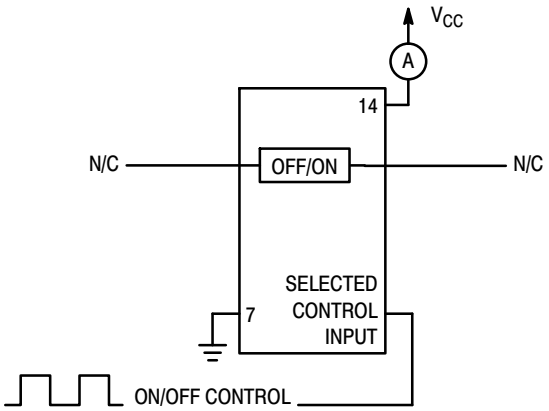

Figure 13. Power Dissipation Capacitance Test Set−Up

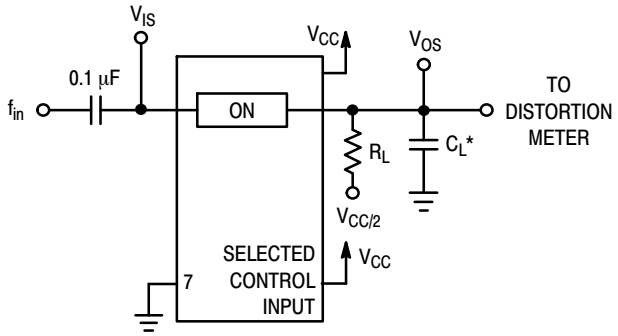

*Includes all probe and jig capacitance.

Figure 14. Total Harmonic Distortion, Test Set−Up

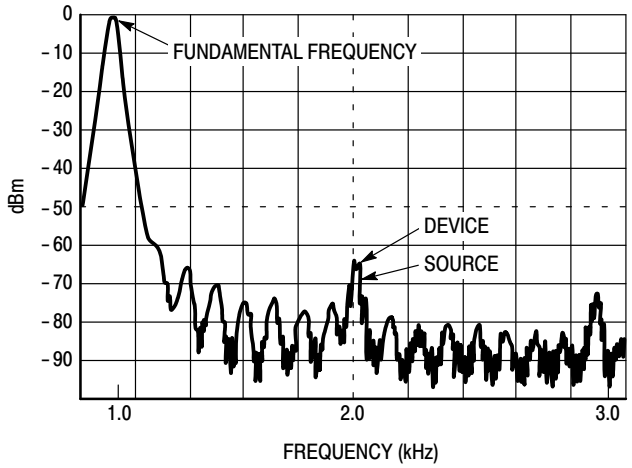

Figure 15. Plot, Harmonic Distortion

APPLICATION INFORMATION

The ON/OFF Control pins should be at V_{CC} or GND logic levels, V_{CC} being recognized as logic high and GND being recognized as a logic low. Unused analog inputs/outputs may be left floating (not connected). However, it is advisable to tie unused analog inputs and outputs to V_{CC} or GND through a low value resistor. This minimizes crosstalk and feedthrough noise that may be picked−up by the unused I/O pins.

The maximum analog voltage swings are determined by the supply voltages V_{CC} and GND. The positive peak analog voltage should not exceed V_{CC}. Similarly, the negative peak analog voltage should not go below GND. In the example below, the difference between V_{CC} and GND is six volts. Therefore, using the configuration in Figure 16, a maximum analog signal of six volts peak−to−peak can be controlled.

When voltage transients above V_{CC} and/or below GND are anticipated on the analog channels, external diodes (Dx) are recommended as shown in Figure 17. These diodes should be small signal, fast turn−on types able to absorb the maximum anticipated current surges during clipping. An alternate method would be to replace the Dx diodes with Mosorbs (MOSORB™ is an acronym for high current surge protectors). Mosorbs are fast turn−on devices ideally suited for precise DC protection with no inherent wear out mechanism.

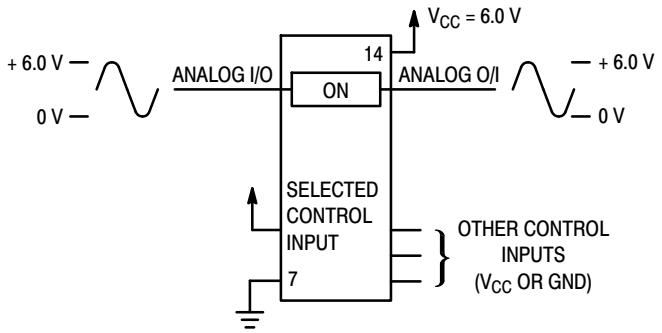

Figure 16. 6.0 V Application

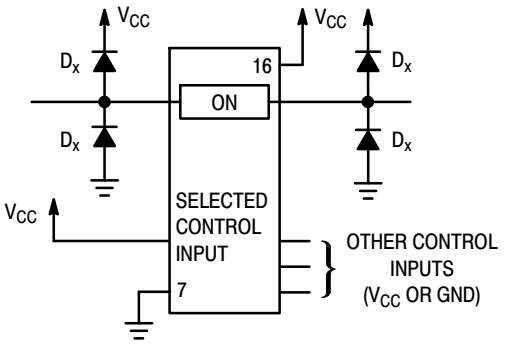

Figure 17. Transient Suppressor Application

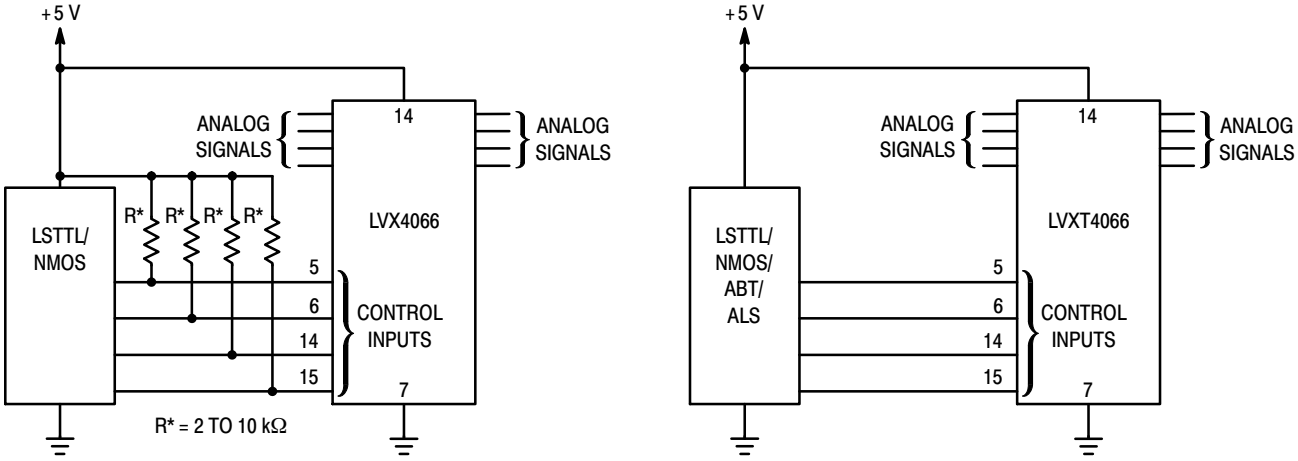

a. Using Pull-Up Resistors

b. Using LVXT4066

Figure 18. LSTTL/NMOS to CMOS Interface

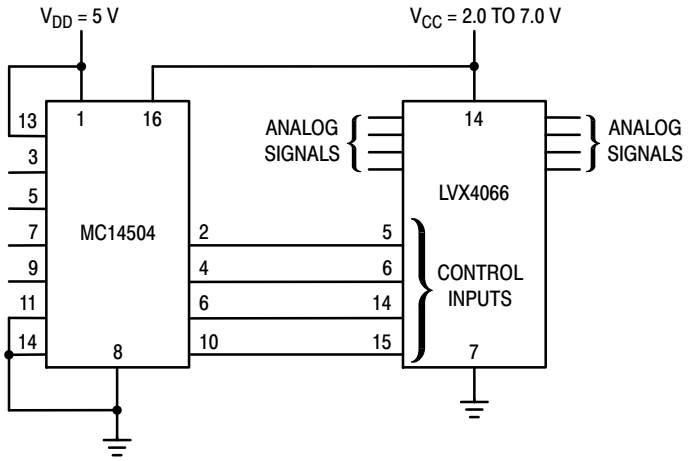

Figure 19. TTL/NMOS−to−CMOS Level Converter Analog Signal Peak−to−Peak Greater than 5 V

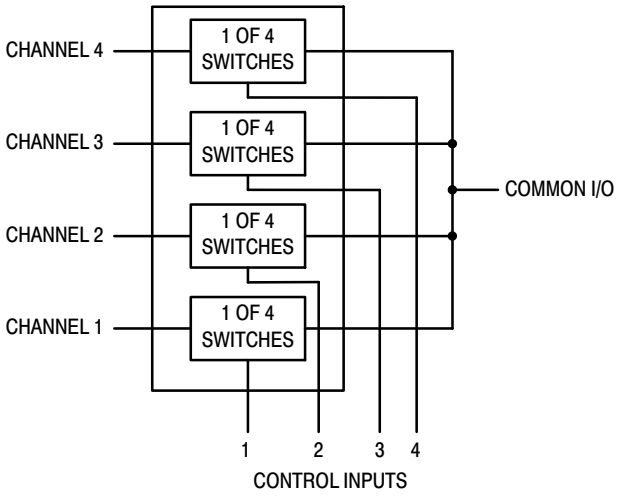

Figure 20. 4−Input Multiplexer

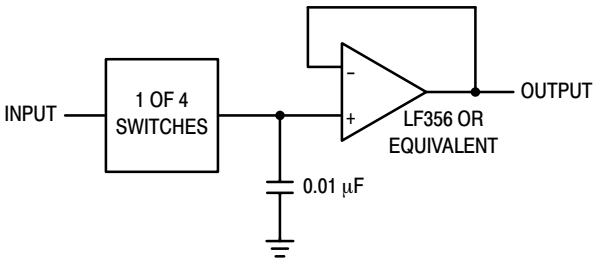

Figure 21. Sample/Hold Amplifier

*MOSORB, MiniMOSORB, Thermowatt and Thermopad are now trademarks of Littelfuse, Inc.

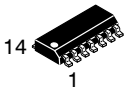

SCALE 1:1

SOIC−14 NB
CASE 751A−03
ISSUE L

DATE 03 FEB 2016

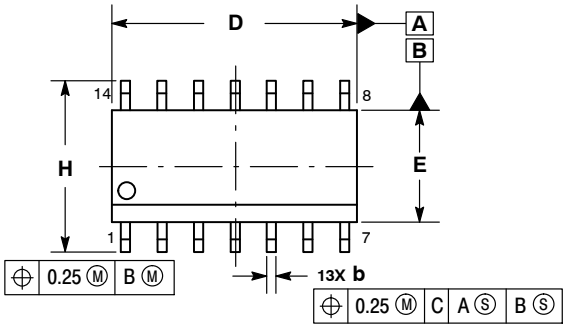

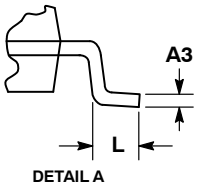

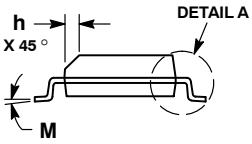

NOTES:
1. DIMENSIONING AND TOLERANCING PER ASME Y14.5M, 1994.
2. CONTROLLING DIMENSION: MILLIMETERS.
3. DIMENSION b DOES NOT INCLUDE DAMBAR PROTRUSION. ALLOWABLE PROTRUSION SHALL BE 0.13 TOTAL IN EXCESS OF AT MAXIMUM MATERIAL CONDITION.
4. DIMENSIONS D AND E DO NOT INCLUDE MOLD PROTRUSIONS.
5. MAXIMUM MOLD PROTRUSION 0.15 PER SIDE.

	MILLIMETERS		INCHES	
DIM	MIN	MAX	MIN	MAX
A	1.35	1.75	0.054	0.068
A1	0.10	0.25	0.004	0.010
A3	0.19	0.25	0.008	0.010
b	0.35	0.49	0.014	0.019
D	8.55	8.75	0.337	0.344
E	3.80	4.00	0.150	0.157
e	1.27 BSC		0.050 BSC	
H	5.80	6.20	0.228	0.244
h	0.25	0.50	0.010	0.019
L	0.40	1.25	0.016	0.049
M	0 °	7 °	0 °	7 °

SOLDERING FOOTPRINT*

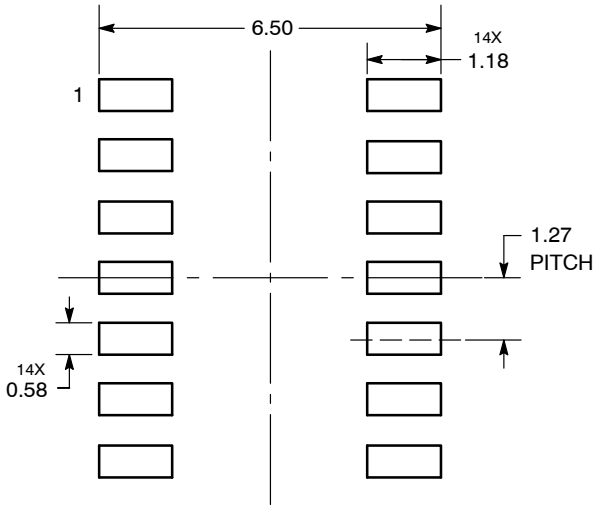

DIMENSIONS: MILLIMETERS

*For additional information on our Pb−Free strategy and soldering details, please download the **onsemi** Soldering and Mounting Techniques Reference Manual, SOLDERRM/D.

GENERIC MARKING DIAGRAM*

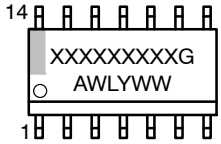

XXXXX	= Specific Device Code
A	= Assembly Location
WL	= Wafer Lot
Y	= Year
WW	= Work Week
G	= Pb−Free Package

*This information is generic. Please refer to device data sheet for actual part marking. Pb−Free indicator, “G” or microdot “▪”, may or may not be present. Some products may not follow the Generic Marking.

STYLES ON PAGE 2

DOCUMENT NUMBER:	98ASB42565B	Electronic versions are uncontrolled except when accessed directly from the Document Repository. Printed versions are uncontrolled except when stamped “CONTROLLED COPY” in red.
DESCRIPTION:	SOIC−14 NB	PAGE 1 OF 2

onsemi and onsemi are trademarks of Semiconductor Components Industries, LLC dba **onsemi** or its subsidiaries in the United States and/or other countries. **onsemi** reserves the right to make changes without further notice to any products herein. **onsemi** makes no warranty, representation or guarantee regarding the suitability of its products for any particular purpose, nor does **onsemi** assume any liability arising out of the application or use of any product or circuit, and specifically disclaims any and all liability, including without limitation special, consequential or incidental damages. **onsemi** does not convey any license under its patent rights nor the rights of others.

SOIC−14
CASE 751A−03
ISSUE L

DATE 03 FEB 2016

STYLE 1:
PIN 1. COMMON CATHODE
2. ANODE/CATHODE
3. ANODE/CATHODE
4. NO CONNECTION
5. ANODE/CATHODE
6. NO CONNECTION
7. ANODE/CATHODE
8. ANODE/CATHODE
9. ANODE/CATHODE
10. NO CONNECTION
11. ANODE/CATHODE
12. ANODE/CATHODE
13. NO CONNECTION
14. COMMON ANODE

STYLE 2:
CANCELLED

STYLE 3:
PIN 1. NO CONNECTION
2. ANODE
3. ANODE
4. NO CONNECTION
5. ANODE
6. NO CONNECTION
7. ANODE
8. ANODE
9. ANODE
10. NO CONNECTION
11. ANODE
12. ANODE
13. NO CONNECTION
14. COMMON CATHODE

STYLE 4:
PIN 1. NO CONNECTION
2. CATHODE
3. CATHODE
4. NO CONNECTION
5. CATHODE
6. NO CONNECTION
7. CATHODE
8. CATHODE
9. CATHODE
10. NO CONNECTION
11. CATHODE
12. CATHODE
13. NO CONNECTION
14. COMMON ANODE

STYLE 5:
PIN 1. COMMON CATHODE
2. ANODE/CATHODE
3. ANODE/CATHODE
4. ANODE/CATHODE
5. ANODE/CATHODE
6. NO CONNECTION
7. COMMON ANODE
8. COMMON CATHODE
9. ANODE/CATHODE
10. ANODE/CATHODE
11. ANODE/CATHODE
12. ANODE/CATHODE
13. NO CONNECTION
14. COMMON ANODE

STYLE 6:
PIN 1. CATHODE
2. CATHODE
3. CATHODE
4. CATHODE
5. CATHODE
6. CATHODE
7. CATHODE
8. ANODE
9. ANODE
10. ANODE
11. ANODE
12. ANODE
13. ANODE
14. ANODE

STYLE 7:
PIN 1. ANODE/CATHODE
2. COMMON ANODE
3. COMMON CATHODE
4. ANODE/CATHODE
5. ANODE/CATHODE
6. ANODE/CATHODE
7. ANODE/CATHODE
8. ANODE/CATHODE
9. ANODE/CATHODE
10. ANODE/CATHODE
11. COMMON CATHODE
12. COMMON ANODE
13. ANODE/CATHODE
14. ANODE/CATHODE

STYLE 8:
PIN 1. COMMON CATHODE
2. ANODE/CATHODE
3. ANODE/CATHODE
4. NO CONNECTION
5. ANODE/CATHODE
6. ANODE/CATHODE
7. COMMON ANODE
8. COMMON ANODE
9. ANODE/CATHODE
10. ANODE/CATHODE
11. NO CONNECTION
12. ANODE/CATHODE
13. ANODE/CATHODE
14. COMMON CATHODE

onsemi and onsemi are trademarks of Semiconductor Components Industries, LLC dba **onsemi** or its subsidiaries in the United States and/or other countries. **onsemi** reserves the right to make changes without further notice to any products herein. **onsemi** makes no warranty, representation or guarantee regarding the suitability of its products for any particular purpose, nor does **onsemi** assume any liability arising out of the application or use of any product or circuit, and specifically disclaims any and all liability, including without limitation special, consequential or incidental damages. **onsemi** does not convey any license under its patent rights nor the rights of others.

© Semiconductor Components Industries, LLC, 2019

onsemi, onsemi, and other names, marks, and brands are registered and/or common law trademarks of Semiconductor Components Industries, LLC dba "**onsemi**" or its affiliates and/or subsidiaries in the United States and/or other countries. **onsemi** owns the rights to a number of patents, trademarks, copyrights, trade secrets, and other intellectual property. A listing of **onsemi**'s product/patent coverage may be accessed at www.onsemi.com/site/pdf/Patent−Marking.pdf. **onsemi** reserves the right to make changes at any time to any products or information herein, without notice. The information herein is provided "as−is" and **onsemi** makes no warranty, representation or guarantee regarding the accuracy of the information, product features, availability, functionality, or suitability of its products for any particular purpose, nor does **onsemi** assume any liability arising out of the application or use of any product or circuit, and specifically disclaims any and all liability, including without limitation special, consequential or incidental damages. Buyer is responsible for its products and applications using **onsemi** products, including compliance with all laws, regulations and safety requirements or standards, regardless of any support or applications information provided by **onsemi**. "Typical" parameters which may be provided in **onsemi** data sheets and/or specifications can and do vary in different applications and actual performance may vary over time. All operating parameters, including "Typicals" must be validated for each customer application by customer's technical experts. **onsemi** does not convey any license under any of its intellectual property rights nor the rights of others. **onsemi** products are not designed, intended, or authorized for use as a critical component in life support systems or any FDA Class 3 medical devices or medical devices with a same or similar classification in a foreign jurisdiction or any devices intended for implantation in the human body. Should Buyer purchase or use **onsemi** products for any such unintended or unauthorized application, Buyer shall indemnify and hold **onsemi** and its officers, employees, subsidiaries, affiliates, and distributors harmless against all claims, costs, damages, and expenses, and reasonable attorney fees arising out of, directly or indirectly, any claim of personal injury or death associated with such unintended or unauthorized use, even if such claim alleges that **onsemi** was negligent regarding the design or manufacture of the part. **onsemi** is an Equal Opportunity/Affirmative Action Employer. This literature is subject to all applicable copyright laws and is not for resale in any manner.

ADDITIONAL INFORMATION

TECHNICAL PUBLICATIONS:
Technical Library: www.onsemi.com/design/resources/technical−documentation
onsemi Website: www.onsemi.com

ONLINE SUPPORT: www.onsemi.com/support
For additional information, please contact your local Sales Representative at
www.onsemi.com/support/sales