8-pin SOIC AC Input Phototransistor Output Optocoupler

MOC256M

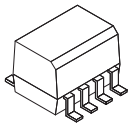

SOIC8
CASE 751DZ

Description

The MOC256M is an AC input phototransistor opto−coupler. The device consists of two infrared emitters connected in anti−parallel and coupled to a silicon NPN phototransistor detector. It is designed for applications requiring the detection or monitoring of AC signals. The device is constructed with a standard SOIC−8 footprint.

Features

- Bidirectional AC Input
  - Protection Against Reversed DC Bias
- Guaranteed CTR Symmetry of 2:1 Maximum
- Convenient Plastic SOIC−8 Surface Mountable Package Style, with 0.050” Lead Spacing
- Safety and Regulatory Approvals:
  - UL1577, 2,500 VAC_{RMS} for 1 Minute
  - DIN−EN/IEC60747−5−5, 565 V Peak Working Insulation Voltage
- These are Pb−Free Devices

MARKING DIAGRAM

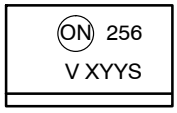

256 = Device Number
V = DIN EN/IEC60747−5−5 Option (only appears on component ordered with this option)
X = One−Digit Year Code, e.g., “4”
YY = Digit Work Week, Ranging from “01” to “53”
S = Assembly Package Code

SCHEMATIC

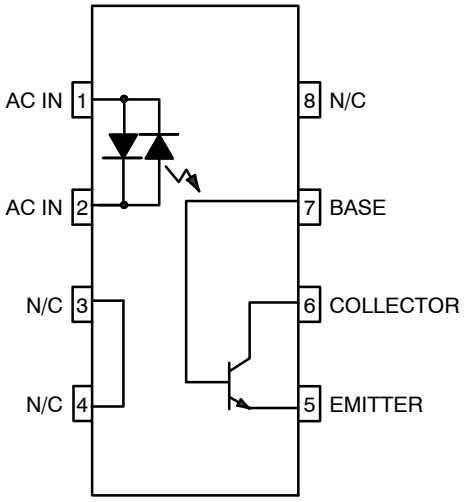

ORDERING INFORMATION

See detailed ordering and shipping information on page 5 of this data sheet.

© Semiconductor Components Industries, LLC, 2005

SAFETY AND INSULATION RATINGS (As per DIN EN/IEC 60747−5−5, this optocoupler is suitable for “safe electrical insulation” only within the safety limit data. Compliance with the safety ratings shall be ensured by means of protective circuits.)

Parameter		Characteristics
Installation Classifications per DIN VDE 0110/1.89 Table 1, For Rated Mains Voltage	<150 V_{RMS}	I–IV
	<300 V_{RMS}	I–III
Climatic Classification		55/100/21
Pollution Degree (DIN VDE 0110/1.89)		2
Comparative Tracking Index		175

Symbol	Parameter	Value	Unit
V_{PR}	Input−to−Output Test Voltage, Method A, V_{IORM} x 1.6 = V_{PR}, Type and Sample Test with t_m = 10 s, Partial Discharge < 5 pC	904	V_{peak}
	Input−to−Output Test Voltage, Method B, VIORM x 1.875 = V_{PR}, 100% Production Test with t_m = 1 s, Partial Discharge < 5 pC	1060	V_{peak}
V_{IORM}	Maximum Working Insulation Voltage	565	V_{peak}
V_{IOTM}	Highest Allowable Over−Voltage	4000	V_{peak}
	External Creepage	≥4	mm
	External Clearance	≥4	mm
DTI	Distance Through Insulation (Insulation Thickness)	≥0.4	mm
T_S	Case Temperature (Note 1)	150	°C
$I_{S,INPUT}$	Input Current (Note 1)	200	mA
$P_{S,OUTPUT}$	Output Power (Note 1)	300	mW
R_{IO}	Insulation Resistance at T_S, V_{IO} = 500 V (Note 1)	$>10^9$	Ω

1. Safety limit values – maximum values allowed in the event of a failure.

ABSOLUTE MAXIMUM RATINGS (T_A = 25°C unless otherwise noted)

Symbol	Parameter	Value	Unit
TOTAL DEVICE			
T_{STG}	Storage Temperature	−40 to +125	°C
T_A	Ambient Operating Temperature	−40 to +100	°C
T_J	Junction Temperature Range	−40 to +125	°C
T_{SOL}	Lead Solder Temperature	260 for 10 seconds	°C
P_D	Total Device Power Dissipation @ T_A = 25°C	240	mW
	Derate Above 25°C	2.94	mW/°C
EMITTER			
I_F	Continuous Forward Current	60	mA
I_F (pk)	Forward Current – Peak (PW = 100 μs, 120 pps)	1.0	A
V_R	Reverse Voltage	6.0	V
P_D	LED Power Dissipation @ T_A = 25°C	90	mW
	Derate Above 25°C	0.8	mW/°C
DETECTOR			
I_C	Continuous Collector Current	150	mA
V_{CEO}	Collector−Emitter Voltage	30	V
V_{CBO}	Collector−Base Voltage	70	V
V_{ECO}	Emitter−Collector Voltage	7	V
P_D	Detector Power Dissipation @ T_A = 25°C	150	mW
	Derate Above 25°C	1.76	mW/°C

Stresses exceeding those listed in the Maximum Ratings table may damage the device. If any of these limits are exceeded, device functionality should not be assumed, damage may occur and reliability may be affected.

ELECTRICAL CHARACTERISTICS (T_A = 25°C, unless otherwise noted)

Symbol	Parameter	Test Conditions	Min	Typ	Max	Unit
EMITTER						
V_F	Input Forward Voltage	I_F = ±10 mA	–	1.2	1.5	V
C_{IN}	Input Capacitance	V = 0 V, f = 1 MHz	–	20	–	pF
DETECTOR						
I_{CEO1}	Collector−Emitter Dark Current	V_{CE} = 10 V, T_A = 25°C	–	1.0	100	nA
I_{CEO2}		V_{CE} = 10 V, T_A = 100°C	–	1.0	–	μA
I_{CBO}	Collector−Base Dark Current	V_{CB} = 10 V	–	0.2	–	nA
BV_{CEO}	Collector−Emitter Breakdown Voltage	I_C = 10 mA	30	100	–	V
BV_{CBO}	Collector−Base Breakdown Voltage	I_C = 100 μA	70	120	–	V
BV_{ECO}	Emitter−Collector Breakdown Voltage	I_E = 100 μA	5	10	–	V
C_{CE}	Collector−Emitter Capacitance	f = 1.0 MHz, V_{CE} = 0	–	7	–	pF
C_{CB}	Collector−Base Capacitance	f = 1.0 MHz, V_{CB} = 0	–	20	–	pF
C_{EB}	Emitter−Base Capacitance	f = 1.0 MHz, V_{EB} = 0	–	10	–	pF
COUPLED						
CTR	Current Transfer Ratio	I_F = ±10 mA, V_{CE} = 10 V	20	150	–	%
	Output−Collector Current Symmetry	$\left(\frac{I_C@I_F = +10\text{ mA}, V_{CE} = 10\text{ V}}{I_C@I_F = -10\text{ mA}, V_{CE} = 10\text{ V}}\right)$	0.5	–	2.0	
$V_{CE\ (SAT)}$	Collector−Emitter Saturation Voltage	I_C = 0.5 mA, I_F = ±10 mA	–	0.1	0.4	V
ISOLATION CHARACTERISTICS						
V_{ISO}	Input−Output Isolation Voltage	t = 1 Minute	2500	–	–	VAC_{RMS}
C_{ISO}	Isolation Capacitance	V_{I-O} = 0 V, f = 1 MHz	–	0.2	–	pF
R_{ISO}	Isolation Resistance	V_{I-O} = ±500 VDC, T_A = 25°C	10^{11}	–	–	Ω

Product parametric performance is indicated in the Electrical Characteristics for the listed test conditions, unless otherwise noted. Product performance may not be indicated by the Electrical Characteristics if operated under different conditions.

TYPICAL PERFORMANCE CURVES

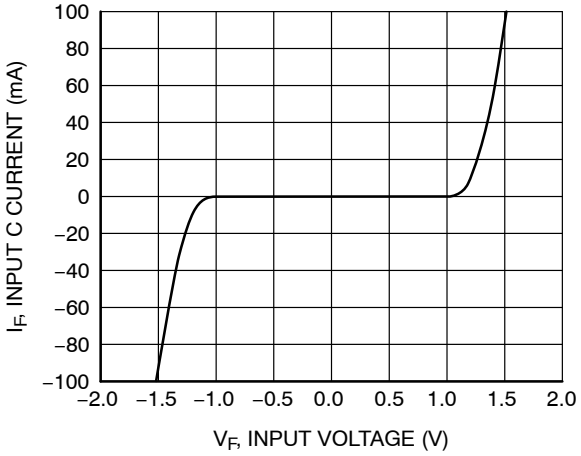

Figure 1. Input Current vs. Input Voltage

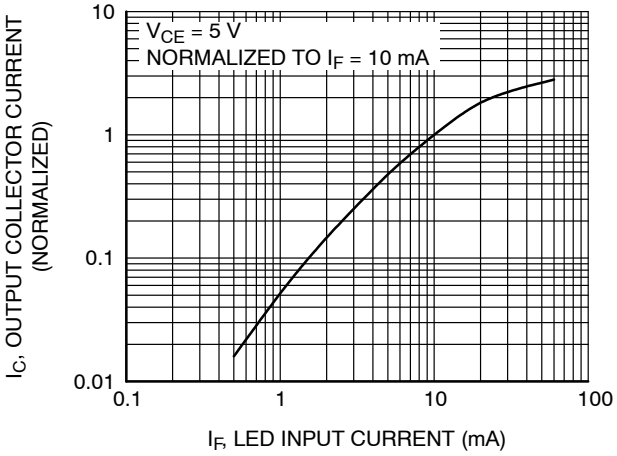

Figure 2. Output Current vs. Input Current

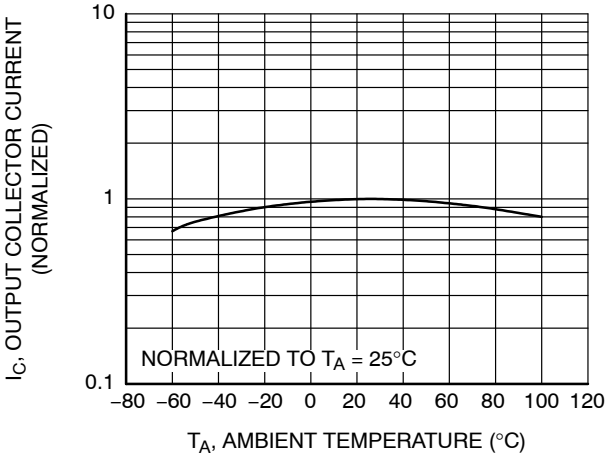

Figure 3. Output Current vs. Ambient Temperature

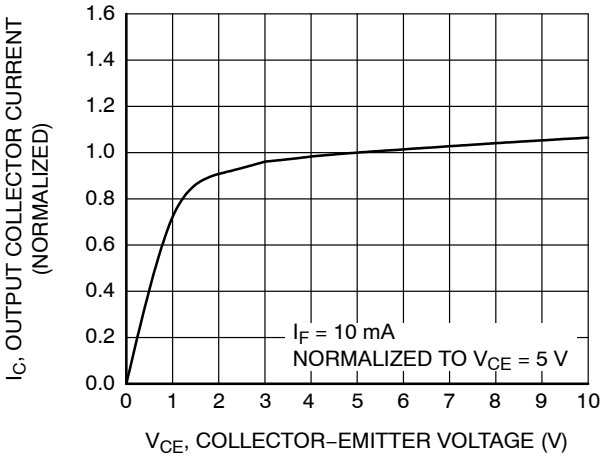

Figure 4. Output Current vs. Collector−Emitter Voltage

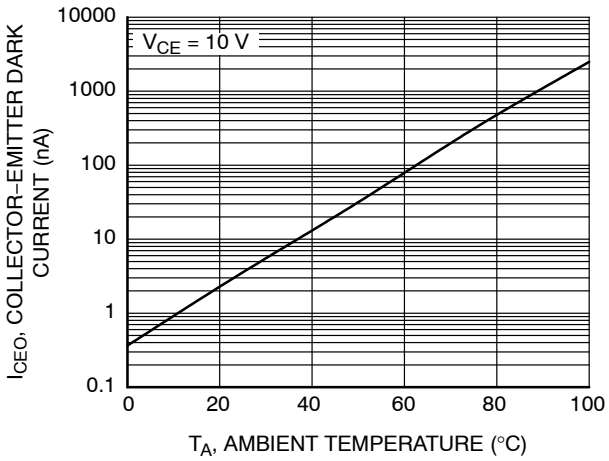

Figure 5. Dark Current vs. Ambient Temperature

REFLOW PROFILE

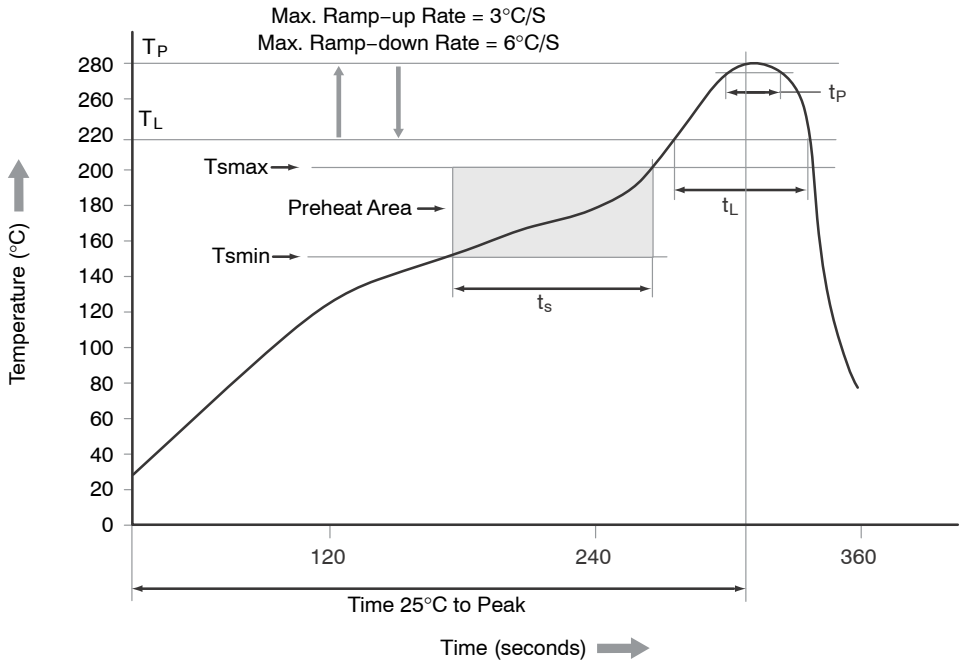

Figure 6. Reflow Profile

Table 1.

Profile Feature	Pb−Free Assembly Profile
Temperature Minimum (Tsmin)	150°C
Temperature Maximum (Tsmax)	200°C
Time (t_S) from (Tsmin to Tsmax)	60−120 seconds
Ramp−up Rate (t_L to t_P)	3°C/second maximum
Liquidous Temperature (T_L)	217°C
Time (t_L) Maintained Above (T_L)	60−150 seconds
Peak Body Package Temperature	260°C +0°C / −5°C
Time (t_P) within 5°C of 260°C	30 seconds
Ramp−down Rate (T_P to T_L)	6°C/second maximum
Time 25°C to Peak Temperature	8 minutes maximum

ORDERING INFORMATION

Part Number	Package	Shipping†
MOC256M	Small Outline 8−Pin, SOIC8 (Pb−Free)	50 Units / Tube
MOC256R2M	Small Outline 8−Pin, SOIC8 (Pb−Free)	2500 Units / Tape & Reel
MOC256VM	Small Outline 8−Pin, SOIC8, DIN EN/IEC60747−5−5 Option (Pb−Free)	50 Units / Tube
MOC256R2VM	Small Outline 8−Pin, SOIC8, DIN EN/IEC60747−5−5 Option (Pb−Free)	2500 Units / Tape & Reel

†For information on tape and reel specifications, including part orientation and tape sizes, please refer to our Tape and Reel Packaging Specifications Brochure, BRD8011/D.

SOIC8
CASE 751DZ
ISSUE O

DATE 30 SEP 2016

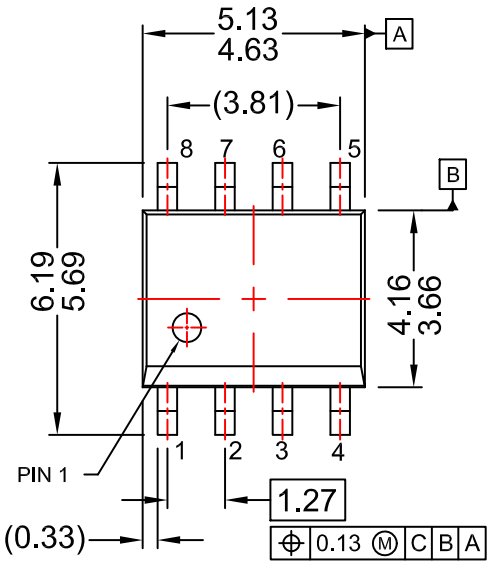

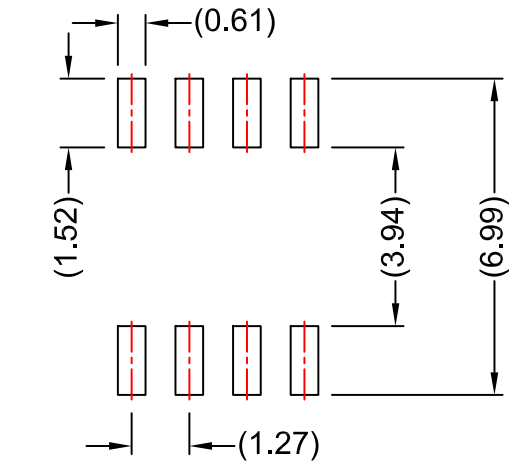

LAND PATTERN RECOMMENDATION

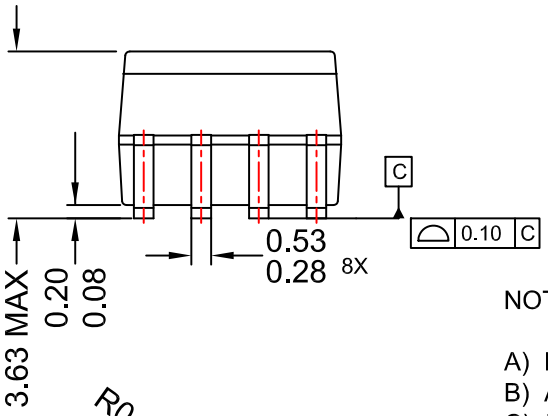

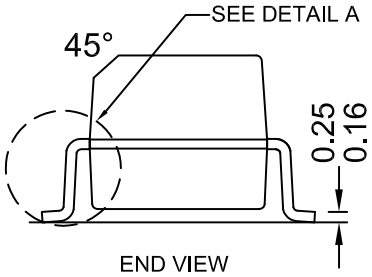

END VIEW

NOTES:

A) NO STANDARD APPLIES TO THIS PACKAGE
B) ALL DIMENSIONS ARE IN MILLIMETERS.
C) DIMENSIONS DO NOT INCLUDE MOLD FLASH OR BURRS.
D) LANDPATTERN STANDARD: SOIC127P600X175-8M.

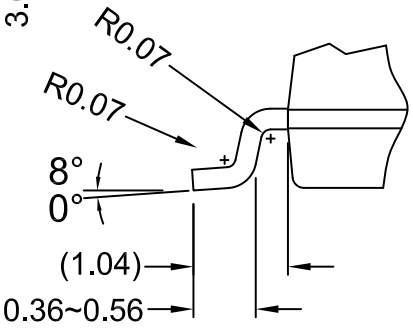

DETAIL A
SCALE: 2:1

DOCUMENT NUMBER:	**98AON13733G**	Electronic versions are uncontrolled except when accessed directly from the Document Repository. Printed versions are uncontrolled except when stamped "CONTROLLED COPY" in red.
DESCRIPTION:	**SOIC8**	**PAGE 1 OF 1**

onsemi and onsemi are trademarks of Semiconductor Components Industries, LLC dba **onsemi** or its subsidiaries in the United States and/or other countries. **onsemi** reserves the right to make changes without further notice to any products herein. **onsemi** makes no warranty, representation or guarantee regarding the suitability of its products for any particular purpose, nor does **onsemi** assume any liability arising out of the application or use of any product or circuit, and specifically disclaims any and all liability, including without limitation special, consequential or incidental damages. **onsemi** does not convey any license under its patent rights nor the rights of others.

onsemi, onsemi, and other names, marks, and brands are registered and/or common law trademarks of Semiconductor Components Industries, LLC dba "**onsemi**" or its affiliates and/or subsidiaries in the United States and/or other countries. **onsemi** owns the rights to a number of patents, trademarks, copyrights, trade secrets, and other intellectual property. A listing of **onsemi**'s product/patent coverage may be accessed at www.onsemi.com/site/pdf/Patent−Marking.pdf. **onsemi** reserves the right to make changes at any time to any products or information herein, without notice. The information herein is provided "as−is" and **onsemi** makes no warranty, representation or guarantee regarding the accuracy of the information, product features, availability, functionality, or suitability of its products for any particular purpose, nor does **onsemi** assume any liability arising out of the application or use of any product or circuit, and specifically disclaims any and all liability, including without limitation special, consequential or incidental damages. Buyer is responsible for its products and applications using **onsemi** products, including compliance with all laws, regulations and safety requirements or standards, regardless of any support or applications information provided by **onsemi**. "Typical" parameters which may be provided in **onsemi** data sheets and/or specifications can and do vary in different applications and actual performance may vary over time. All operating parameters, including "Typicals" must be validated for each customer application by customer's technical experts. **onsemi** does not convey any license under any of its intellectual property rights nor the rights of others. **onsemi** products are not designed, intended, or authorized for use as a critical component in life support systems or any FDA Class 3 medical devices or medical devices with a same or similar classification in a foreign jurisdiction or any devices intended for implantation in the human body. Should Buyer purchase or use **onsemi** products for any such unintended or unauthorized application, Buyer shall indemnify and hold **onsemi** and its officers, employees, subsidiaries, affiliates, and distributors harmless against all claims, costs, damages, and expenses, and reasonable attorney fees arising out of, directly or indirectly, any claim of personal injury or death associated with such unintended or unauthorized use, even if such claim alleges that **onsemi** was negligent regarding the design or manufacture of the part. **onsemi** is an Equal Opportunity/Affirmative Action Employer. This literature is subject to all applicable copyright laws and is not for resale in any manner.

ADDITIONAL INFORMATION

TECHNICAL PUBLICATIONS:
Technical Library: www.onsemi.com/design/resources/technical−documentation
onsemi Website: www.onsemi.com

ONLINE SUPPORT: www.onsemi.com/support
For additional information, please contact your local Sales Representative at
www.onsemi.com/support/sales