MOSFET - Power, N-Channel, Logic Level
50 V, 16 A, 47 mΩ

RFD16N05LSM

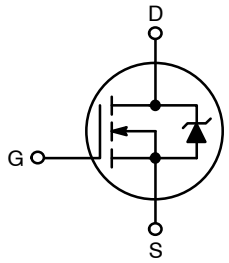

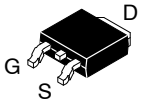

DPAK
TO−252
CASE 369AS

These are N−Channel logic level power MOSFETs manufactured using the MegaFET process. This process, which uses feature sizes approaching those of LSI integrated circuits gives optimum utilization of silicon, resulting in outstanding performance. They were designed for use with logic level (5 V) driving sources in applications such as programmable controllers, switching regulators, switching converters, motor relay drivers and emitter switches for bipolar transistors. This performance is accomplished through a special gate oxide design which provides full rated conductance at gate biases in the 3 V to 5 V range, thereby facilitating true on−off power control directly from logic circuit supply voltages.

Formerly developmental type TA09871.

Features

- 16 A, 50 V
- $r_{DS(ON)}$ = 0.047 Ω
- UIS SOA Rating Curve (Single Pulse)
- Design Optimized for 5 V Gate Drives
- Can be Driven Directly from CMOS, NMOS, TTL Circuits
- SOA is Power Dissipation Limited
- Nanosecond Switching Speeds
- Linear Transfer Characteristics
- High Input Impedance
- Majority Carrier Device
- Related Literature
  - TB334 “Guidelines for Soldering Surface Mount Components to PC Boards”

MARKING DIAGRAM

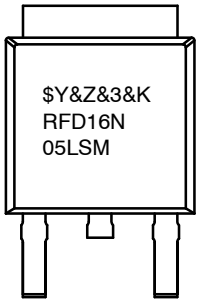

&Y	= **onsemi** Logo
&Z	= Assembly Plant Code
&3	= Numeric Date Code
&K	= Lot Code
RFD16N05LSM	= Specific Device Code

ORDERING INFORMATION

Part Number	Package	Brand
RFD16N05LSM9A	TO−252AA	RFD16N05LSM

© Semiconductor Components Industries, LLC, 2003

MAXIMUM RATINGS

Rating	Symbol	RFD16N05LSM9A	Unit
Drain to Source Voltage (Note 1)	V_{DS}	50	V
Drain to Gate Voltage (R_{GS} 20 kΩ) (Note 1)	V_{DGR}	50	V
Continuous Drain Current	I_D	16	A
Pulsed Drain Current (Note 3)	I_{DM}	45	A
Gate to Source Voltage	V_{GS}	±10	V
Maximum Power Dissipation	P_D	60	W
Derate Above 25°C		0.48	W/°C
Operating and Storage Temperature	T_J, T_{STG}	−55 to 150	°C
Maximum Temperature for Soldering			
Leads at 0.063 in (1.6 mm) from Case for 10 s	T_L	300	°C
Package Body for 10 s, See Techbrief 334	T_{pkg}	260	°C

Stresses exceeding those listed in the Maximum Ratings table may damage the device. If any of these limits are exceeded, device functionality should not be assumed, damage may occur and reliability may be affected.

1. T_J = 25°C to 125°C.

ELECTRICAL SPECIFICATIONS (T_C = 25°C unless otherwise specified)

Parameter	Symbol	Test Conditions		Min	TYP	Max	Unit
Drain to Source Breakdown Voltage	BV_{DSS}	I_D = 250 mA, V_{GS} = 0 V, Figure 10		50	-	-	V
Gate to Threshold Voltage	$V_{GS(TH)}$	V_{GS} = V_{DS}, I_D = 250 μA, Figure 9		1	–	2	V
Zero Gate Voltage Drain Current	I_{DSS}	V_{DS} = 40 V, V_{GS} = 0 V		–	–	1	μA
			T_C = 150°C	–	–	50	μA
Gate to Source Leakage Current	I_{GSS}	V_{GS} = ±10 V, V_{DS} = 0 V		–	–	100	nA
Drain to Source On Resistance (Note 2)	$r_{DS(ON)}$	I_D = 16 A, V_{GS} = 5 V		–	–	0.047	Ω
		I_D = 16 A, V_{GS} = 4 V		–	–	0.056	Ω
Turn−On Time	$t_{(ON)}$	V_{DD} = 25 V, I_D = 8 A, V_{GS} = 5 V, R_{GS} = 12.5 Ω Figures 15, 16		–	–	60	ns
Turn−On Delay Time	$t_{d(ON)}$			–	14	–	ns
Rise Time	t_r			–	30	–	ns
Turn−Off Delay Time	$t_{d(OFF)}$			–	42	–	ns
Fall Time	t_f			–	14	–	ns
Turn−Off Time	$t_{(OFF)}$			–	–	–	ns
Total Gate Charge	$Q_{g(TOT)}$	V_{GS} = 0 V to 10 V	V_{DD} = 40 V, I_D = 16 A, R_L = 2.5 Ω Figures 17, 18	–	–	80	nC
Gate Charge at 5 V	$Q_{g(5)}$	V_{GS} = 0 V to 5 V		–	–	45	nC
Threshold Gate Charge	$Q_{g(TH)}$	V_{GS} = 0 V to 1 V		–	–	3	nC
Thermal Resistance Junction to Case	$R_{\theta JC}$			–	–	2.083	°C/W
Thermal Resistance Junction to Ambient	$R_{\theta JA}$			–	–	100	°C/W

SOURCE TO DRAIN DIODE SPECIFICATIONS

Parameter	Symbol	Test Conditions	Min	Typ	Max	Unit
Source to Drain Diode Voltage	V_{SD}	I_{SD} = 16 A	-	-	1.5	V
Diode Reverse Recovery Time	t_{rr}	I_{SD} = 16 A, dI_{SD}/dt = 100 A/μs	-	-	125	ns

Product parametric performance is indicated in the Electrical Characteristics for the listed test conditions, unless otherwise noted. Product performance may not be indicated by the Electrical Characteristics if operated under different conditions.

2. Pulse Test: Pulse Width ≤300 ms, Duty Cycle ≤2%.
3. Repetitive Rating: Pulse Width limited by max junction temperature.

TYPICAL PERFORMANCE CURVES (Unless Otherwise Specified)

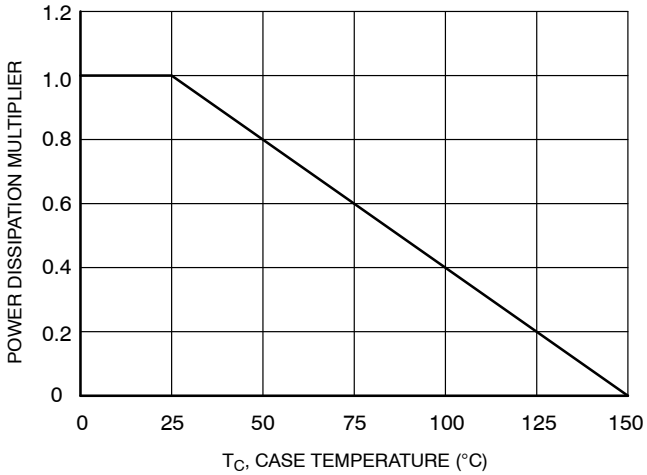

Figure 1. Normalized Power Dissipation vs Case Temperature

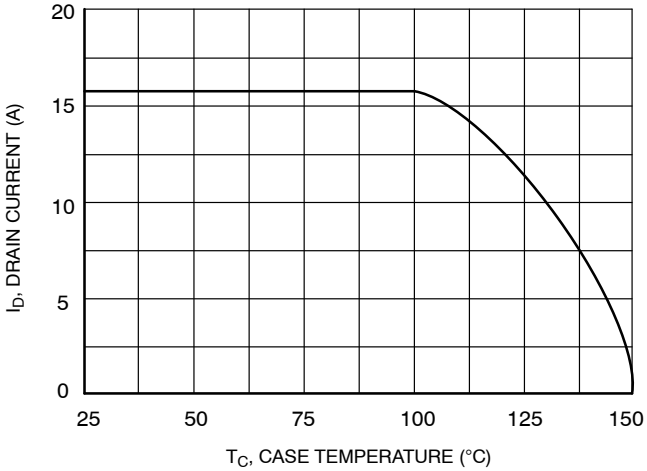

Figure 2. Maximum Continuous Drain Current vs Case Temperature

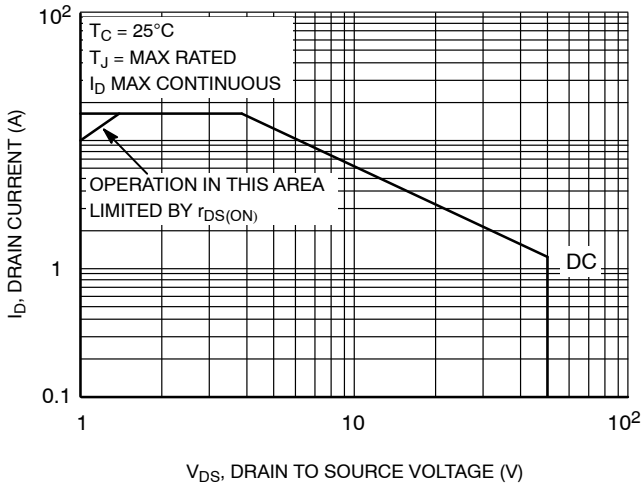

Figure 3. Forward Bias Safe Operating Area

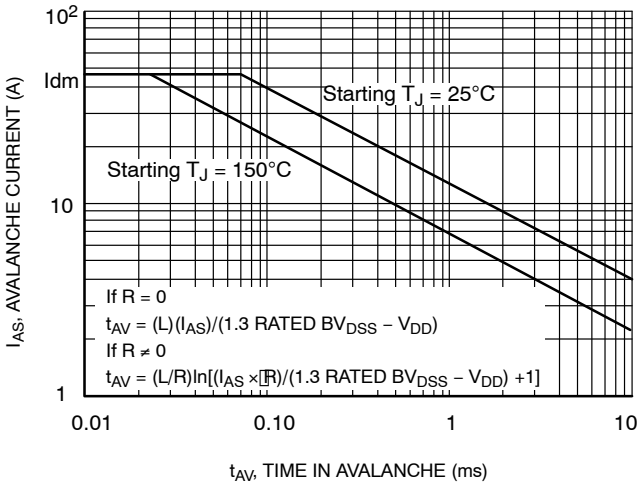

Figure 4. Unclamped Inductive Switching SOA (Single Pulse UIS SOA)

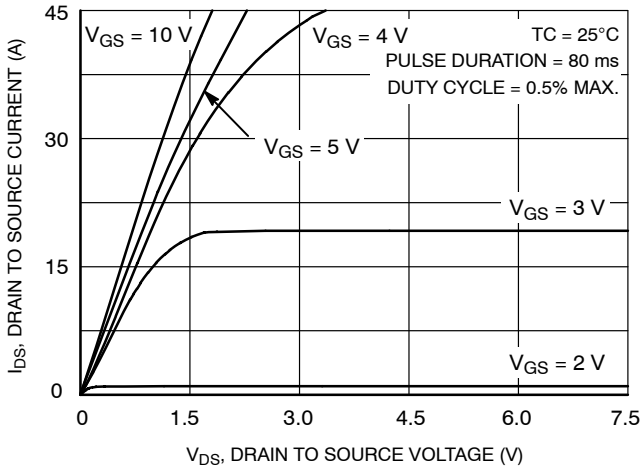

Figure 5. Saturation Characteristics

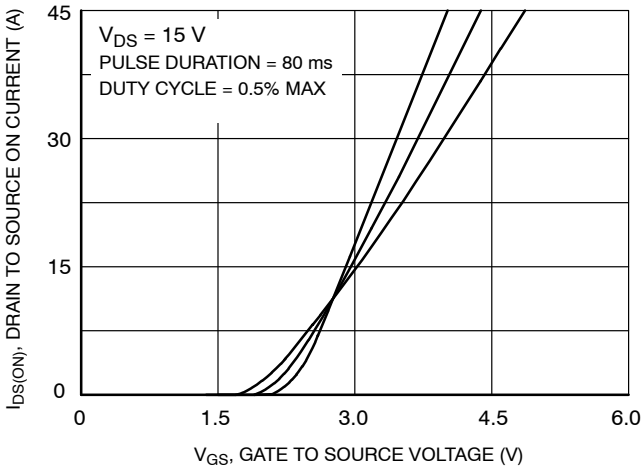

Figure 6. Transfer Characteristics

TYPICAL PERFORMANCE CURVES (Unless Otherwise Specified) (continued)

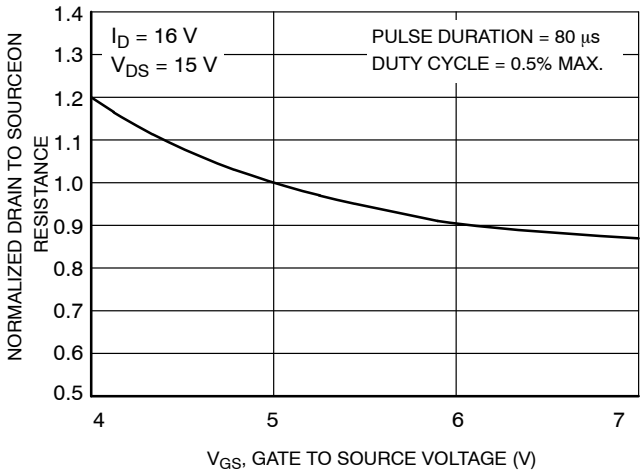

Figure 7. Drain to Source on Resitance vs Gate Voltageand Drain Current

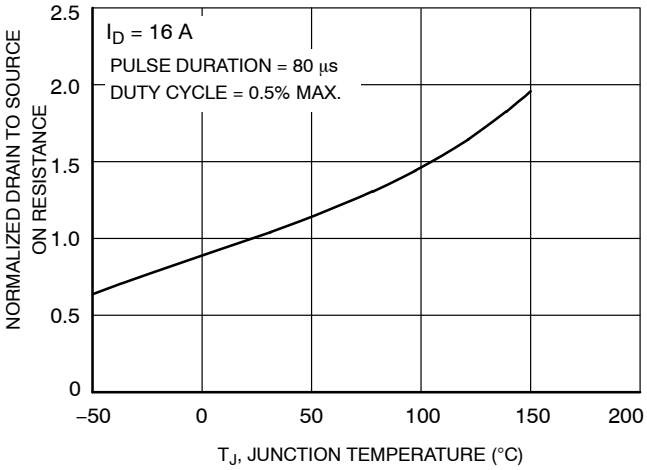

Figure 8. Normalized Drain to Source on Resistance vs. Junction Temperature

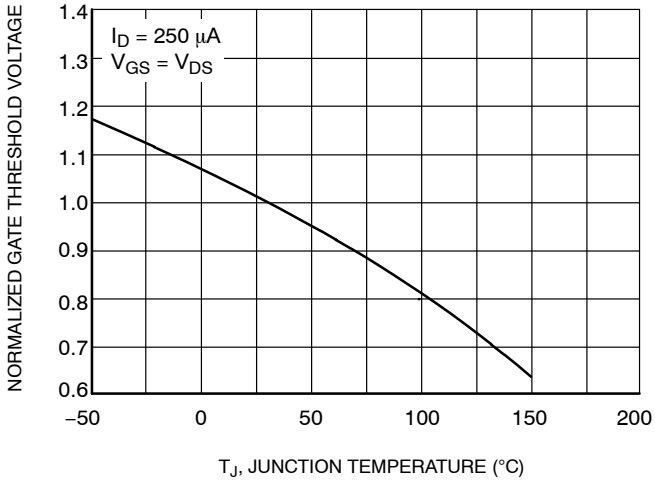

Figure 9. Normalized Gate Threshold vs Junction Temperature

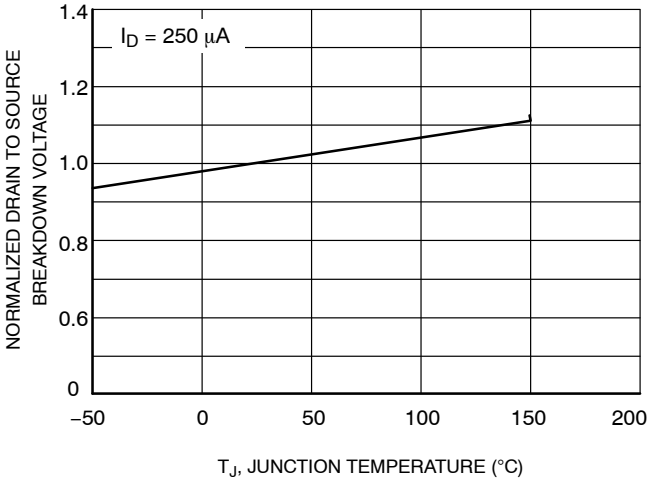

Figure 10. Normalized Drain to Source Breakdown Voltage vs Junction Temperature

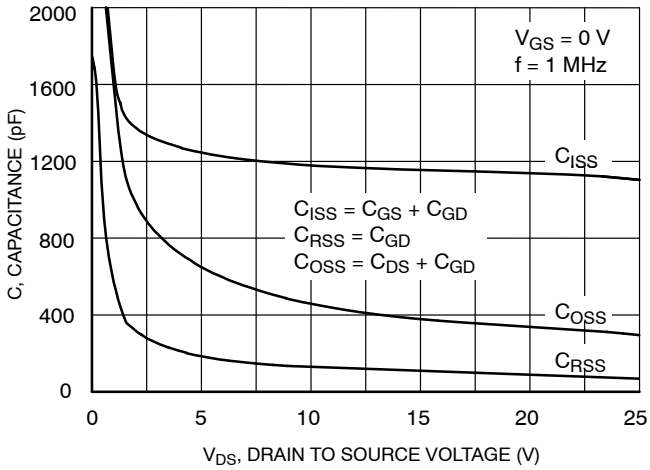

Figure 11. Capacitance vs Drain to Source Voltage

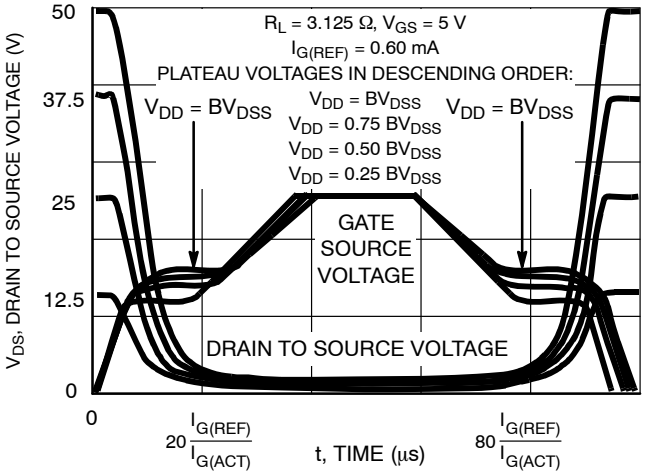

Figure 12. Normalized Switching Waveforms for Constant Gate Current

TEST CIRCUITS AND WAVEFORMS

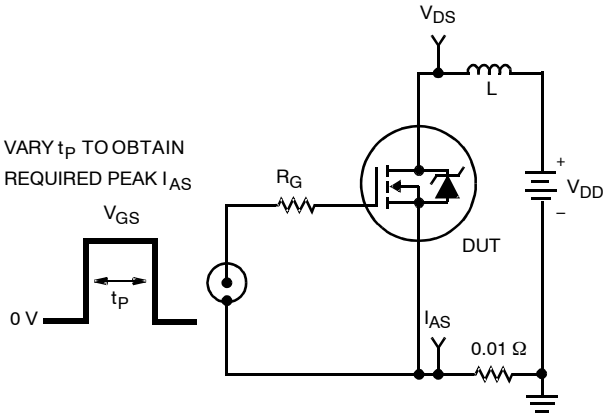

Figure 13. Unclamped Energy Test Circuit

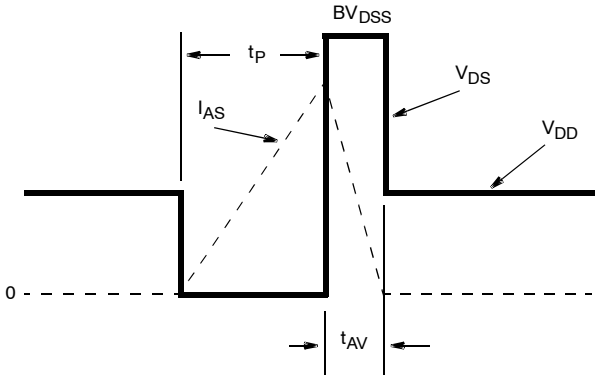

Figure 14. Unclamped Energy Waveforms

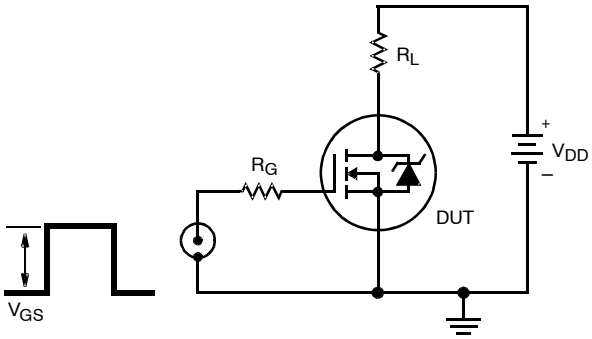

Figure 15. Switching Time Test Circuit

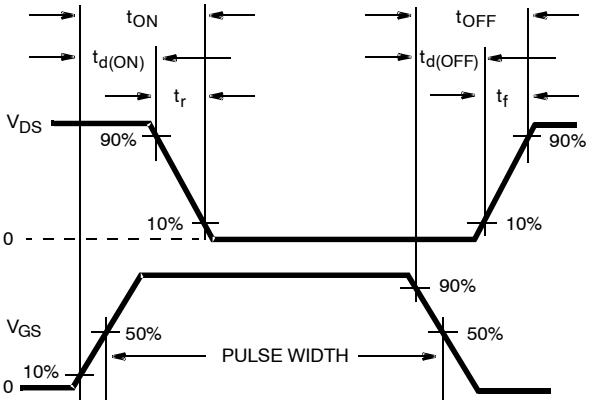

Figure 16. Resistive Switching Waveforms

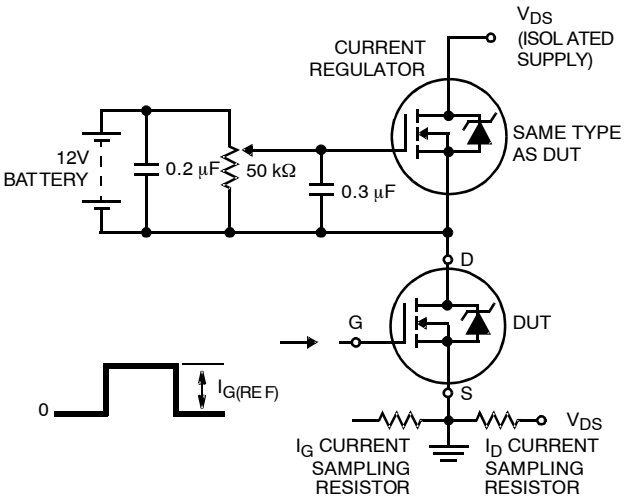

Figure 17. Gate Charge Test Circuit

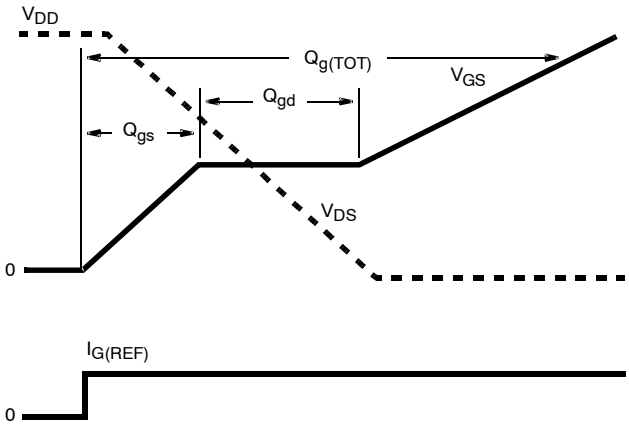

Figure 18. Gate Charge Waveforms

PSPICE ELECTRICAL MODEL

```
.SUBCKT RFD16N05L 2 1 3 ; REV 4/8/92

Ca 12 8 3.33e-9
Cb 15 14 3.11e-9
Cin 6 8 1.21e-9

Dbody 7 5 DBDMOD
Dbreak 5 11 DBKMOD
Dplcap 10 5 DPLCAPMOD

Ebreak 11 7 17 18 70.9
Eds 14 8 5 8 1
Egs 13 8 6 8 1
Esg 6 10 6 8 1
Evto 20 6 18 8 1

IT 8 17 1

Lgate 1 9 1.38e-9
Ldrain 2 5 1.0e-12
Lsource 3 7 1.0e-9

Mos1 16 6 8 8 MOSMOD M = 0.99
Mos2 16 21 8 8 MOSMOD M = 0.01

Rin 6 8 1e9
Rbreak 17 18 RBKMOD 1
Rdrain 5 16 RDSMOD 27.38e-3
Rgate 9 20 2.98
Rsource 8 7 RDSMOD 0.614e-3
Rvto 18 19 RVTOMOD 1

S1a 6 12 13 8 S1AMOD
S1b 13 12 13 8 S1BMOD
S2a 6 15 14 13 S2AMOD
S2b 13 15 14 13 S2BMOD

Vbat 8 19 DC 1
Vto 21 6 0.448

.MODEL DBDMOD D (IS = 1.34e-13 RS = 1.21e-2 TRS1 = 1.64e-3 TRS2 = 2.59e-6 +CJO = 1.13e-9
TT = 4.14e-8)
.MODEL DBKMOD D (RS = 8.82e-2 TRS1 = -2.01e-3 TRS2 = 7.32e-10)
.MODEL DPLCAPMOD D (CJO = 0.522e-9 IS = 1e-30 N = 10)
.MODEL MOSMOD NMOS (VTO = 2.054 KP = 24.73 IS = 1e-30 N = 10 TOX = 1 L = 1u W = 1u)
.MODEL RBKMOD RES (TC1 = 1.01e-3 TC2 = 5.21e-8)
.MODEL RDSMOD RES (TC1 = 3.66e-3 TC2 = 1.46e-5)
.MODEL RVTOMOD RES (TC1 = -1.81e-3 TC2 = 1.41e-6)
.MODEL S1AMOD VSWITCH(RON = 1e-5 ROFF = 0.1 VON = -4.25 VOFF = -2.25)
.MODEL S1BMOD VSWITCH(RON = 1e-5 ROFF = 0.1 VON = -2.25 VOFF = -4.25)
.MODEL S2AMOD VSWITCH(RON = 1e-5 ROFF = 0.1 VON = -0.65 VOFF = 4.35)
.MODEL S2BMOD VSWITCH(RON = 1e-5 ROFF = 0.1 VON = 4.35 VOFF = -0.65)

.ENDS
```

NOTE: For further discussion of the PSPICE model, consult *A New PSPICE Sub−Circuit for the Power MOSFET Featuring Global Temperature Options*; written by William J. Hepp and C. Frank Wheatley.

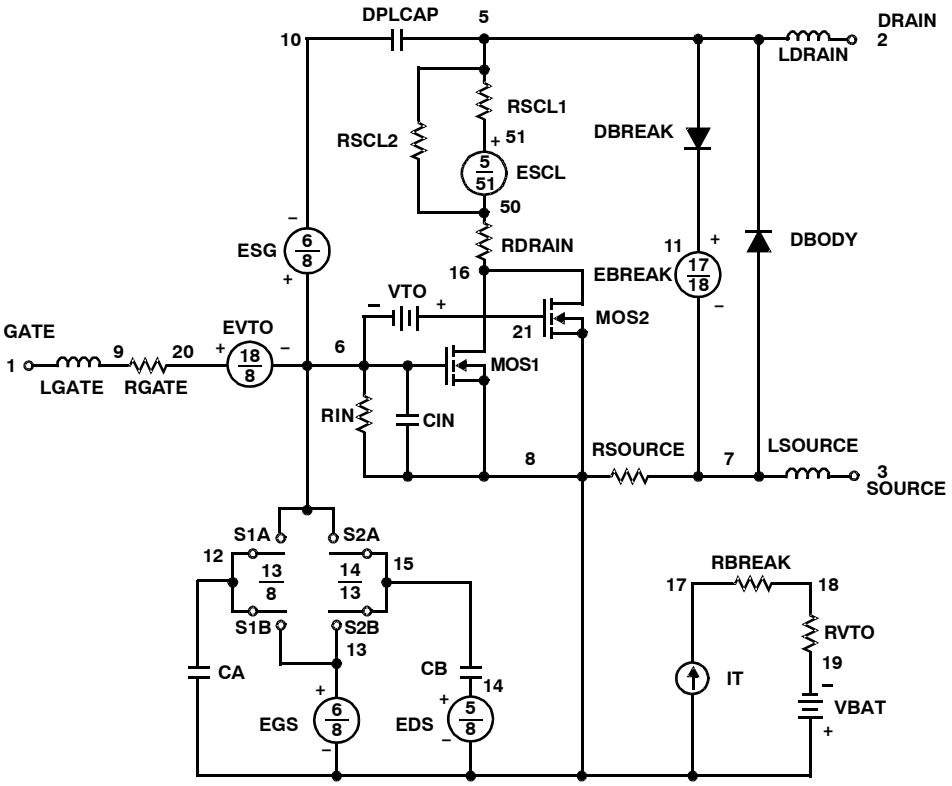
DPLCAP
5
10
DRAIN
2
LDRAIN
RSCL1
RSCL2
51
DBREAK
5
51
ESCL
50
ESG
6
8
RDRAIN
11
DBODY
16
EBREAK
17
18
VTO
MOS2
21
GATE
EVTO
1
9
20
6
18
8
MOS1
LGATE
RGATE
RIN
CIN
8
RSOURCE
7
LSOURCE
3
SOURCE
S1A
S2A
12
13
8
14
13
15
RBREAK
17
18
S1B
S2B
13
RVTO
19
CA
CB
14
IT
VBAT
EGS
6
8
EDS
5
8

Figure 19.

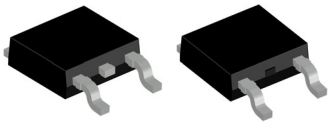

DPAK3 6.10x6.54x2.29, 4.57P
CASE 369AS
ISSUE B

DATE 20 DEC 2023

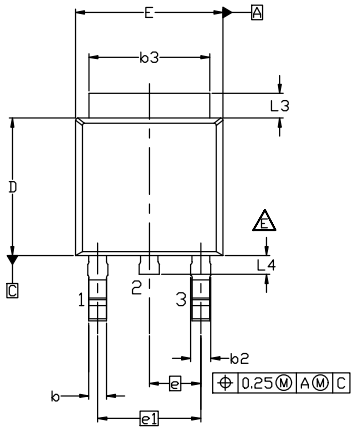

NON-DIODE PRODUCTS VERSION

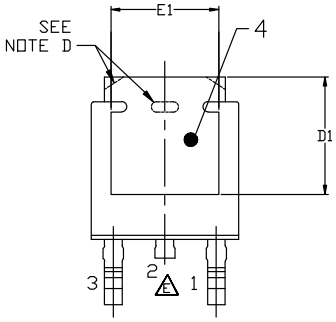

NON-DIODE PRODUCTS VERSION

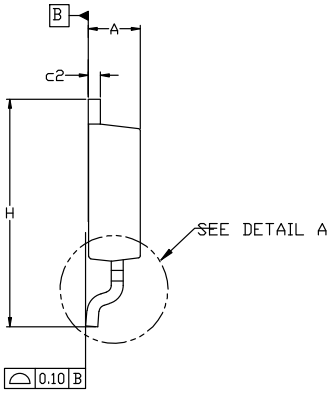

NOTES: UNLESS OTHERWISE SPECIFIED
A) THIS PACKAGE CONFORMS TO JEDEC, TO-252, ISSUE F, VARIATION AA.
B) ALL DIMENSIONS ARE IN MILLIMETERS.
C) DIMENSIONING AND TOLERANCING PER ASME Y14.5M-2018.
D) SUPPLIER DEPENDENT MOLD LOCKING HOLES OR CHAMFERED CORNERS OR EDGE PROTRUSION.
E) FOR DIODE PRODUCTS, L4 IS 0.25 MM MAX PLASTIC BODY STUB WITHOUT CENTER LEAD.
F) DIMENSIONS ARE EXCLUSIVE OF BURRS, MOLD FLASH AND TIE BAR EXTRUSIONS.
G) LAND PATTERN RECOMMENDATION IS BASED ON IPC7351A STD TO228P991X239-3N.

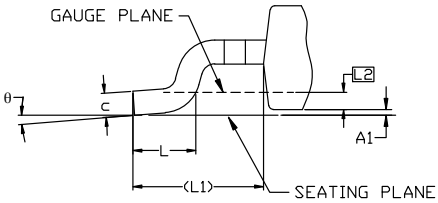

DETAIL A
(ROTATED -90°)
SCALE: 12X

DIM	MILLIMETERS		
	MIN.	NOM.	MAX.
A	2.18	2.29	2.39
A1	0.00	–	0.127
b	0.64	0.77	0.89
b2	0.76	0.95	1.14
b3	5.21	5.34	5.46
c	0.45	0.53	0.61
c2	0.45	0.52	0.58
D	5.97	6.10	6.22
D1	5.21	---	---
E	6.35	6.54	6.73
E1	4.32	---	---
e	2.286 BSC		
e1	4.572 BSC		
H	9.40	9.91	10.41
L	1.40	1.59	1.78
L1	2.90 REF		
L2	0.51 BSC		
L3	0.89	1.08	1.27
L4	---	---	1.02
θ	0°	---	10°

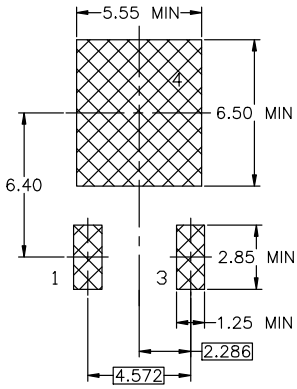

LAND PATTERN RECOMMENDATION

*FOR ADDITIONAL INFORMATION ON OUR PB-FREE STRATEGY AND SOLDERING DETAILS, PLEASE DOWNLOAD THE ON SEMICONDUCTOR SOLDERING AND MOUNTING TECHNIQUES REFERENCE MANUAL, SOLDERRM/D.

GENERIC MARKING DIAGRAM*

*This information is generic. Please refer to device data sheet for actual part marking. Pb-Free indicator, "G" or microdot "▪", may or may not be present. Some products may not follow the Generic Marking.

XXXX = Specific Device Code
A = Assembly Location
Y = Year
WW = Work Week
ZZ = Assembly Lot Code

DOCUMENT NUMBER:	98AON13810G	Electronic versions are uncontrolled except when accessed directly from the Document Repository. Printed versions are uncontrolled except when stamped "CONTROLLED COPY" in red.
DESCRIPTION:	DPAK3 6.10x6.54x2.29, 4.57P	PAGE 1 OF 1

onsemi and onsemi are trademarks of Semiconductor Components Industries, LLC dba **onsemi** or its subsidiaries in the United States and/or other countries. **onsemi** reserves the right to make changes without further notice to any products herein. **onsemi** makes no warranty, representation or guarantee regarding the suitability of its products for any particular purpose, nor does **onsemi** assume any liability arising out of the application or use of any product or circuit, and specifically disclaims any and all liability, including without limitation special, consequential or incidental damages. **onsemi** does not convey any license under its patent rights nor the rights of others.

onsemi, onsemi, and other names, marks, and brands are registered and/or common law trademarks of Semiconductor Components Industries, LLC dba "**onsemi**" or its affiliates and/or subsidiaries in the United States and/or other countries. **onsemi** owns the rights to a number of patents, trademarks, copyrights, trade secrets, and other intellectual property. A listing of **onsemi**'s product/patent coverage may be accessed at www.onsemi.com/site/pdf/Patent−Marking.pdf. **onsemi** reserves the right to make changes at any time to any products or information herein, without notice. The information herein is provided "as−is" and **onsemi** makes no warranty, representation or guarantee regarding the accuracy of the information, product features, availability, functionality, or suitability of its products for any particular purpose, nor does **onsemi** assume any liability arising out of the application or use of any product or circuit, and specifically disclaims any and all liability, including without limitation special, consequential or incidental damages. Buyer is responsible for its products and applications using **onsemi** products, including compliance with all laws, regulations and safety requirements or standards, regardless of any support or applications information provided by **onsemi**. "Typical" parameters which may be provided in **onsemi** data sheets and/or specifications can and do vary in different applications and actual performance may vary over time. All operating parameters, including "Typicals" must be validated for each customer application by customer's technical experts. **onsemi** does not convey any license under any of its intellectual property rights nor the rights of others. **onsemi** products are not designed, intended, or authorized for use as a critical component in life support systems or any FDA Class 3 medical devices or medical devices with a same or similar classification in a foreign jurisdiction or any devices intended for implantation in the human body. Should Buyer purchase or use **onsemi** products for any such unintended or unauthorized application, Buyer shall indemnify and hold **onsemi** and its officers, employees, subsidiaries, affiliates, and distributors harmless against all claims, costs, damages, and expenses, and reasonable attorney fees arising out of, directly or indirectly, any claim of personal injury or death associated with such unintended or unauthorized use, even if such claim alleges that **onsemi** was negligent regarding the design or manufacture of the part. **onsemi** is an Equal Opportunity/Affirmative Action Employer. This literature is subject to all applicable copyright laws and is not for resale in any manner.

ADDITIONAL INFORMATION

TECHNICAL PUBLICATIONS:
Technical Library: www.onsemi.com/design/resources/technical−documentation
onsemi Website: www.onsemi.com

ONLINE SUPPORT: www.onsemi.com/support
For additional information, please contact your local Sales Representative at
www.onsemi.com/support/sales