MOSFET – Power, Dual, N-Channel, for 1-Cell Lithium-ion Battery Protection

12 V, 7.1 mΩ, 14 A

EFC2J004NUZ

V_{SSS}	$R_{SS(on)}$ Max	I_S Max
12 V	7.1 mΩ @ 4.5 V	14 A
	7.7 mΩ @ 3.8 V	
	9.5 mΩ @ 3.1 V	
	12.4 mΩ @ 2.5 V	

This Power MOSFET features a low on−state resistance. This device is suitable for applications such as power switches of portable machines. Best suited for 1−cell lithium−ion battery applications.

Features

- 2.5 V Drive
- 2 kV ESD HBM
- Common-Drain Type
- ESD Diode-Protected Gate
- Pb−Free, Halide Free and RoHS Compliant

Applications

- 1-Cell Lithium-ion Battery Charging and Discharging Switch

Specifications

ABSOLUTE MAXIMUM RATINGS (T_A = 25°C)

Parameter	Symbol	Value	Unit
Source to Source Voltage	V_{SSS}	12	V
Gate to Source Voltage	V_{GSS}	±8	V
Source Current (DC)	I_S	14	A
Source Current (Pulse) PW ≤ 100 μs, duty cycle ≤ 1%	I_{SP}	60	A
Total Dissipation (Note 1)	P_T	1.5	W
Junction Temperature	T_j	150	°C
Storage Temperature	T_{stg}	−55 to +150	°C

Stresses exceeding those listed in the Maximum Ratings table may damage the device. If any of these limits are exceeded, device functionality should not be assumed, damage may occur and reliability may be affected.

THERMAL RESISTANCE RATINGS

Parameter	Symbol	Value	Unit
Junction to Ambient (Note 1)	$R_{\theta JA}$	83	°C/W

1. Surface mounted on ceramic substrate (5000 mm^2 × 0.8 mm).

ELECTRICAL CONNECTION
N-Channel

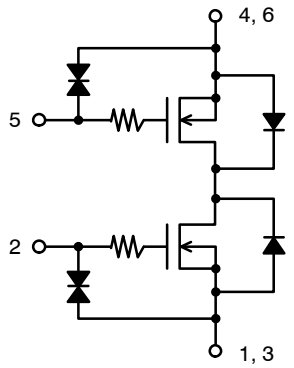

1: Source1
2: Gate1
3: Source1
4: Source 2
5: Gate2
6: Source2

WLCSP6,
2.11x1.18x0.10
CASE 567NP

MARKING DIAGRAM

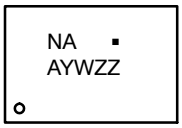

NA = Device Code
A = Assembly Location
Y = Year
W = Work Week
ZZ = Assembly Lot Number
▪ = Pb−Free Package

PIN CONNECTIONS

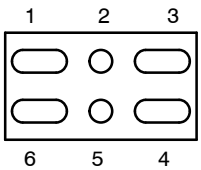

1: Source1
2: Gate1
3: Source1
4: Source 2
5: Gate2
6: Source2

ORDERING INFORMATION

See detailed ordering and shipping information on page 6 of this data sheet.

© Semiconductor Components Industries, LLC, 2022

ELECTRICAL CHARACTERISTICS (T_A = 25°C) (Note 2)

Parameter	Symbol	Conditions	Min	Typ	Max	Unit
Source to Source Breakdown Voltage	$V_{(BR)SSS}$	I_S = 1 mA, V_{GS} = 0 V (Figure 1)	12	–	–	V
Zero-Gate Voltage Source Current	I_{SSS}	V_{SS} = 10 V, V_{GS} = 0 V (Figure 1)	–	–	1	μA
Gate to Source Leakage Current	I_{GSS}	V_{GS} = ±8 V, V_{SS} = 0 V (Figure 2)	–	–	±1	μA
Gate Threshold Voltage	V_{GS}(th)	V_{SS} = 6 V, I_S = 1 mA (Figure 3)	0.4	–	1.3	V
Static Source to Source On-State Resistance (Note 2)	R_{SS}(on)	I_S = 5 A, V_{GS} = 4.5 V (Figure 4)	3.7	5.4	7.1	mΩ
		I_S = 5 A, V_{GS} = 3.8 V (Figure 4)	4.1	5.9	7.7	mΩ
		I_S = 5 A, V_{GS} = 3.1 V (Figure 4)	4.6	6.7	9.5	mΩ
		I_S = 5 A, V_{GS} = 2.5 V (Figure 4)	5.8	8.4	12.4	mΩ
Turn-ON Delay Time	t_d(on)	V_{SS} = 5 V, V_{GS} = 3.8 V, I_S = 5 A, R_g = 10 kΩ (Figure 5)	–	15	–	μs
Rise Time	t_r		–	35	–	μs
Turn-OFF Delay Time	t_d(off)		–	100	–	μs
Fall Time	t_f		–	75	–	μs
Total Gate Charge	Qg	V_{SS} = 6 V, V_{GS} = 4.5 V, I_S = 14 A (Figure 6)	–	36	–	nC
Forward Source to Source Voltage	$V_{F(S-S)}$	I_S = 3 A, V_{GS} = 0 V (Figure 7)	–	0.76	–	V

Product parametric performance is indicated in the Electrical Characteristics for the listed test conditions, unless otherwise noted. Product performance may not be indicated by the Electrical Characteristics if operated under different conditions.

2. Mounted on **onsemi** board.

Test Circuits are Example of Measuring FET1 Side

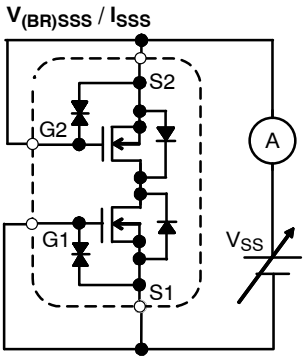

Figure 1. Test Circuit 1

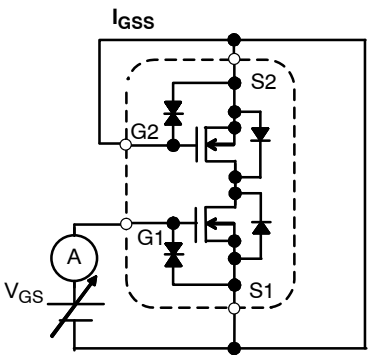

When FET1 is measured, Gate and Source of FET2 are short−circuited.

Figure 2. Test Circuit 2

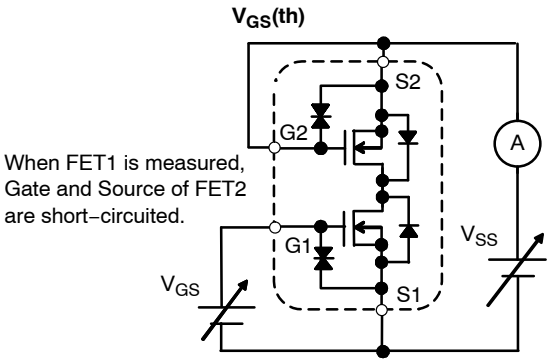

Figure 3. Test Circuit 3

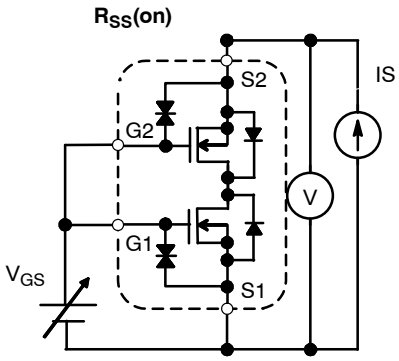

Figure 4. Test Circuit 4

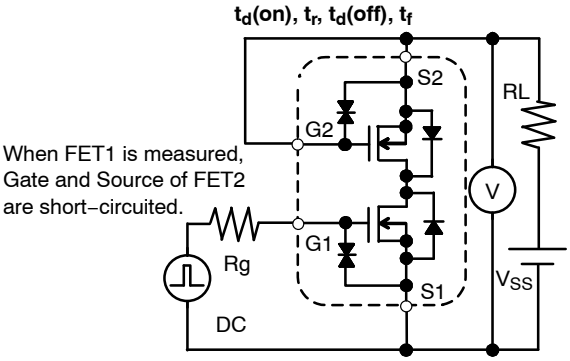

Figure 5. Test Circuit 5

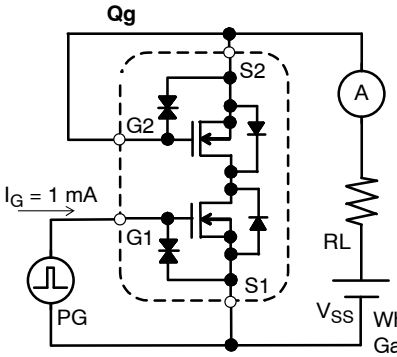

When FET1 is measured, Gate and Source of FET2 are short−circuited.

Figure 6. Test Circuit 6

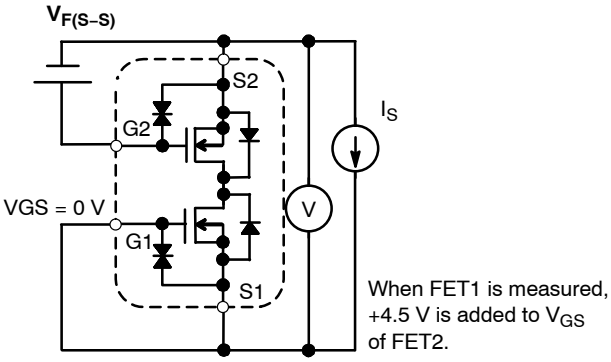

When FET1 is measured, +4.5 V is added to V_{GS} of FET2.

Figure 7. Test Circuit 7

NOTE: When FET2 is measured, the position of FET1 and FET2 is switched.

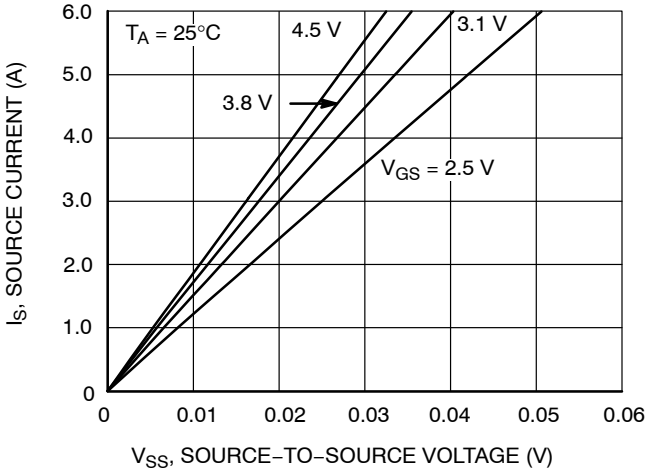

Figure 8. I_S – V_{SS}

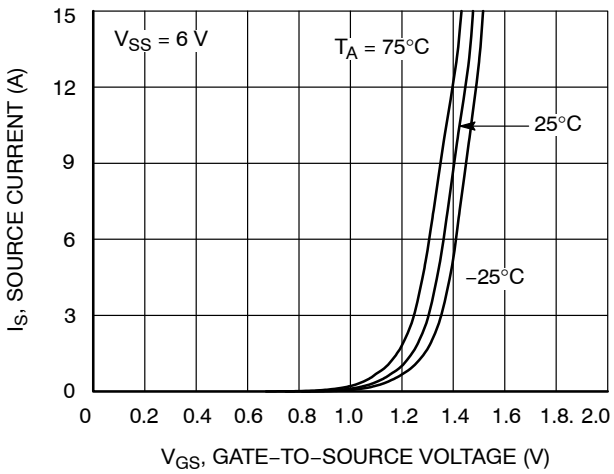

Figure 9. I_S – V_{GS}

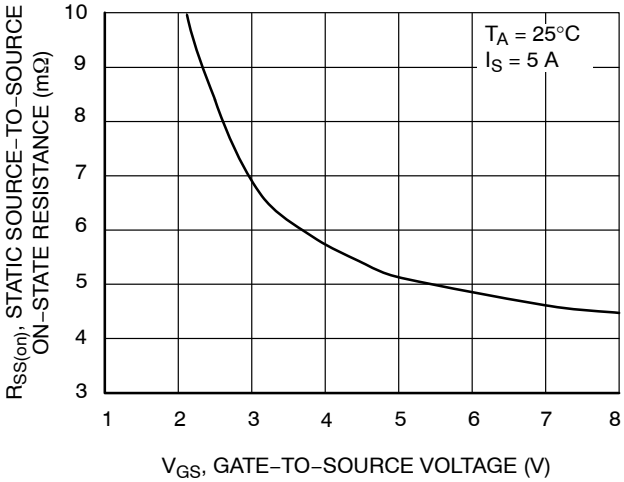

Figure 10. $R_{SS(on)}$ – V_{GS}

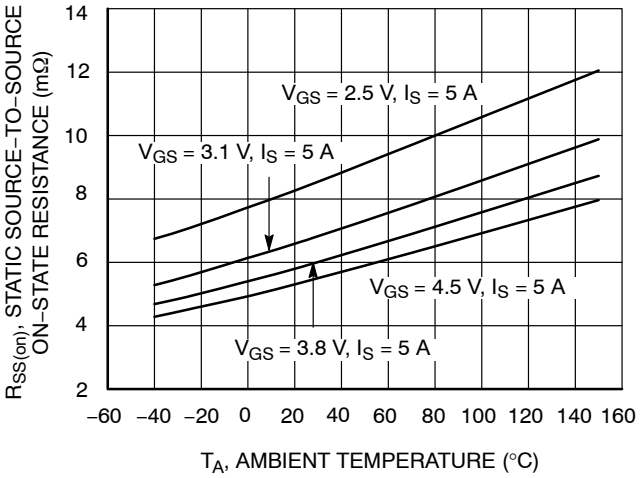

Figure 11. $R_{SS(on)}$ – Ta

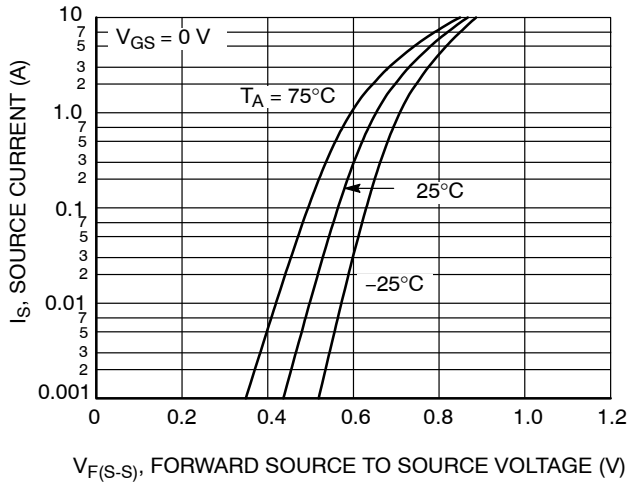

Figure 12. I_S – $V_{F(S-S)}$

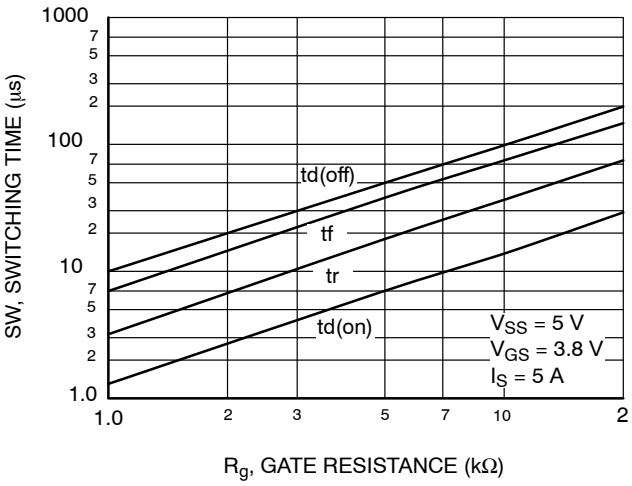

Figure 13. SW Time – R_g

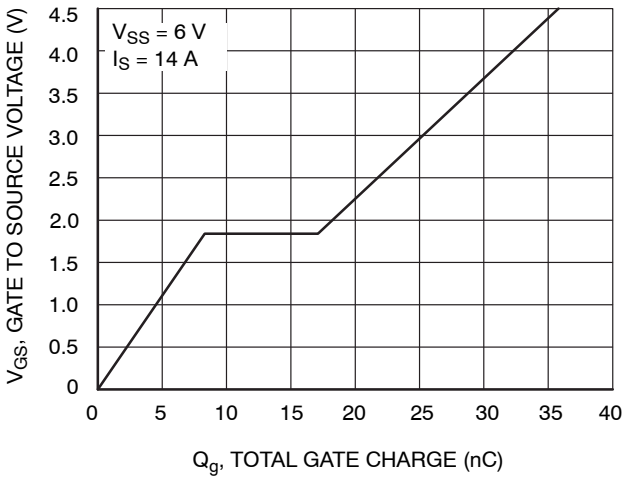

Figure 14. V_{GS} – Qg

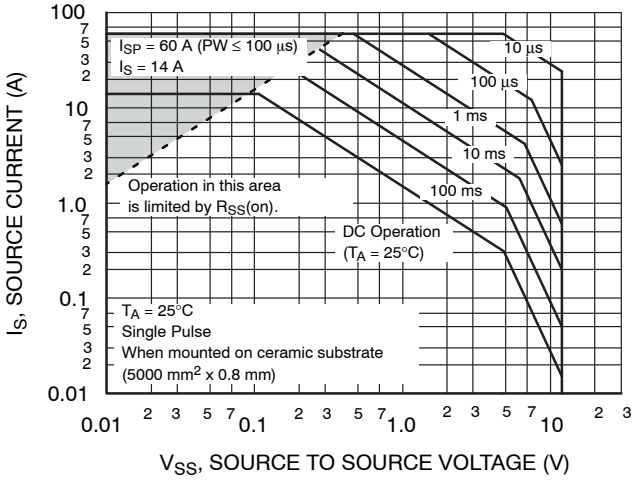

Figure 15. SOA

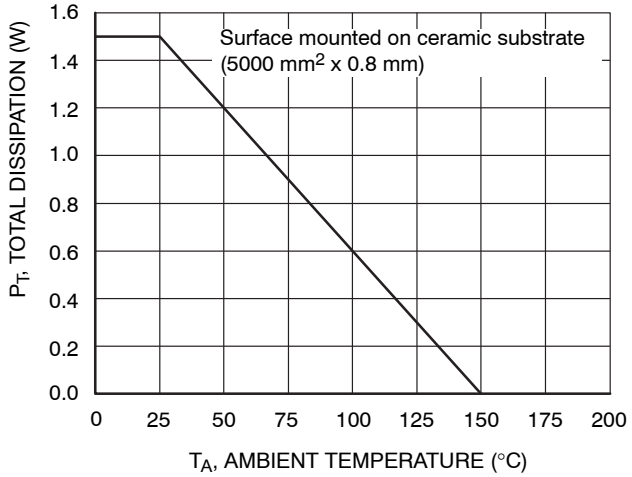

Figure 16. P_T – Ta

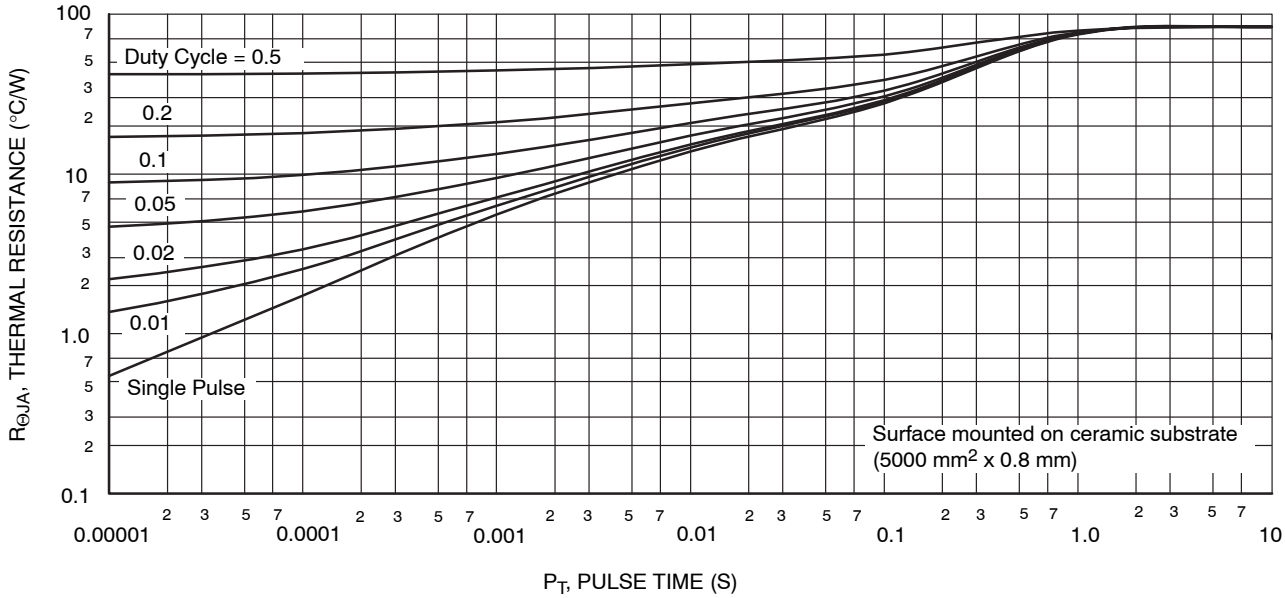

Figure 17. $R_{\theta JA}$ – Pulse Time

ORDERING INFORMATION

Device	Marking	Package	Shipping† (Qty / Packing)
EFC2J004NUZTDG	NA	WLCSP6, 2.11x1.18x0.10 (Pb−Free / Halogen Free)	5000 / Tape & Reel

†For information on tape and reel specifications, including part orientation and tape sizes, please refer to our Tape and Reel Packaging Specifications Brochure, BRD8011/D.

Note on usage: Since the EFC2J004NUZ is a MOSFET product, please avoid using this device in the vicinity of highly charged objects. Please contact sales for use except the designated application.

SCALE 4:1

WLCSP6, 2.11x1.18x0.10
CASE 567NP
ISSUE B

DATE 22 DEC 2016

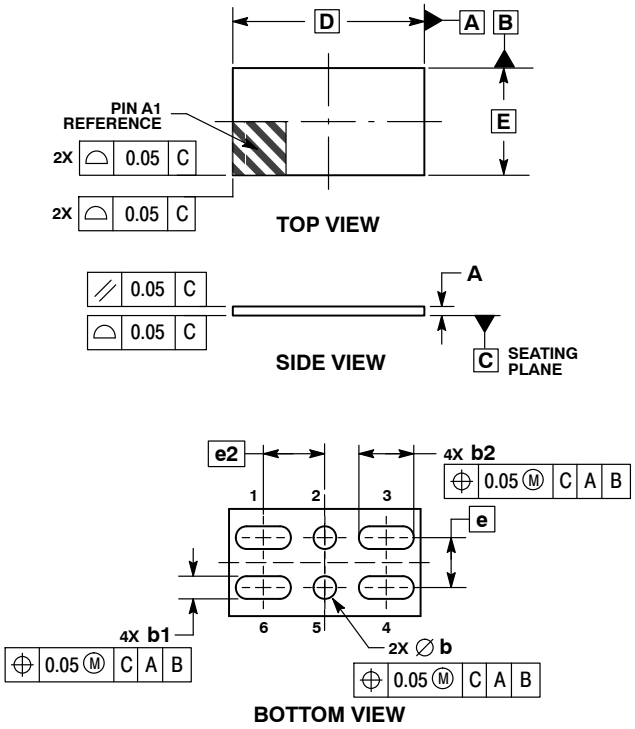

NOTES:
1. DIMENSIONING AND TOLERANCING PER ASME Y14.5M, 1994.
2. CONTROLLING DIMENSION: MILLIMETERS.

DIM	MILLIMETERS		
	MIN	NOM	MAX
A	0.08	0.10	0.12
b	0.22	0.25	0.28
b1	0.27	0.30	0.33
b2	0.575	0.605	0.635
D	2.11 BSC		
E	1.18 BSC		
e	0.55 BSC		
e2	0.6775 BSC		

GENERIC MARKING DIAGRAM*

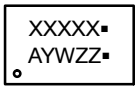

A = Assembly Location
Y = Year
W = Work Week
ZZ = Assembly Lot
▪ = Pb−Free Package

(Note: Microdot may be in either location)

*This information is generic. Please refer to device data sheet for actual part marking. Pb−Free indicator, “G” or microdot “ ▪”, may or may not be present.

RECOMMENDED SOLDERING FOOTPRINT*

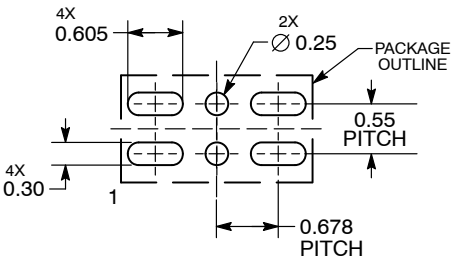

DIMENSIONS: MILLIMETERS

*For additional information on our Pb−Free strategy and soldering details, please download the ON Semiconductor Soldering and Mounting Techniques Reference Manual, SOLDERRM/D.

DOCUMENT NUMBER:	98AON10195G	Electronic versions are uncontrolled except when accessed directly from the Document Repository. Printed versions are uncontrolled except when stamped “CONTROLLED COPY” in red.
DESCRIPTION:	WLCSP6, 2.11X1.18X0.10	PAGE 1 OF 1

onsemi and onsemi are trademarks of Semiconductor Components Industries, LLC dba **onsemi** or its subsidiaries in the United States and/or other countries. **onsemi** reserves the right to make changes without further notice to any products herein. **onsemi** makes no warranty, representation or guarantee regarding the suitability of its products for any particular purpose, nor does **onsemi** assume any liability arising out of the application or use of any product or circuit, and specifically disclaims any and all liability, including without limitation special, consequential or incidental damages. **onsemi** does not convey any license under its patent rights nor the rights of others.

onsemi, onsemi, and other names, marks, and brands are registered and/or common law trademarks of Semiconductor Components Industries, LLC dba "**onsemi**" or its affiliates and/or subsidiaries in the United States and/or other countries. **onsemi** owns the rights to a number of patents, trademarks, copyrights, trade secrets, and other intellectual property. A listing of **onsemi**'s product/patent coverage may be accessed at www.onsemi.com/site/pdf/Patent−Marking.pdf. **onsemi** reserves the right to make changes at any time to any products or information herein, without notice. The information herein is provided "as−is" and **onsemi** makes no warranty, representation or guarantee regarding the accuracy of the information, product features, availability, functionality, or suitability of its products for any particular purpose, nor does **onsemi** assume any liability arising out of the application or use of any product or circuit, and specifically disclaims any and all liability, including without limitation special, consequential or incidental damages. Buyer is responsible for its products and applications using **onsemi** products, including compliance with all laws, regulations and safety requirements or standards, regardless of any support or applications information provided by **onsemi**. "Typical" parameters which may be provided in **onsemi** data sheets and/or specifications can and do vary in different applications and actual performance may vary over time. All operating parameters, including "Typicals" must be validated for each customer application by customer's technical experts. **onsemi** does not convey any license under any of its intellectual property rights nor the rights of others. **onsemi** products are not designed, intended, or authorized for use as a critical component in life support systems or any FDA Class 3 medical devices or medical devices with a same or similar classification in a foreign jurisdiction or any devices intended for implantation in the human body. Should Buyer purchase or use **onsemi** products for any such unintended or unauthorized application, Buyer shall indemnify and hold **onsemi** and its officers, employees, subsidiaries, affiliates, and distributors harmless against all claims, costs, damages, and expenses, and reasonable attorney fees arising out of, directly or indirectly, any claim of personal injury or death associated with such unintended or unauthorized use, even if such claim alleges that **onsemi** was negligent regarding the design or manufacture of the part. **onsemi** is an Equal Opportunity/Affirmative Action Employer. This literature is subject to all applicable copyright laws and is not for resale in any manner.

ADDITIONAL INFORMATION

TECHNICAL PUBLICATIONS:
Technical Library: www.onsemi.com/design/resources/technical−documentation
onsemi Website: www.onsemi.com

ONLINE SUPPORT: www.onsemi.com/support
For additional information, please contact your local Sales Representative at
www.onsemi.com/support/sales