NPN Epitaxial Silicon Transistor

KSC945

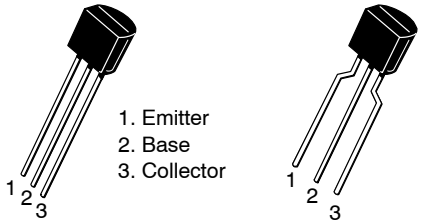

TO−92 3
CASE 135AN

TO−92 3 LF
CASE 135AR

Features

- Audio Frequency Amplifier and High−Frequency OSC
- Complimentary to KSA733
- Collector−Base Voltage: V_{CBO} = 60 V
- High Current Gain Bandwidth Product: f_T = 300 MHz (Typical)
- Suffix "−C" Means Center Collector
  (1. Emitter 2. Collector 3. Base)

ABSOLUTE MAXIMUM RATINGS

(T_A = 25°C unless otherwise noted.)

Symbol	Parameter	Ratings	Unit
V_{CBO}	Collector−Base Voltage	60	V
V_{CEO}	Collector−Emitter Voltage	50	V
V_{EBO}	Emitter−Base Voltage	5	V
I_C	Collector Current	150	mA
T_J	Junction Temperature	150	°C
T_{STG}	Storage Temperature	−55 to 150	°C

Stresses exceeding those listed in the Maximum Ratings table may damage the device. If any of these limits are exceeded, device functionality should not be assumed, damage may occur and reliability may be affected.

THERMAL CHARACTERISTICS

(T_A = 25°C unless otherwise noted.)

Symbol	Parameter	Value	Unit
P_D	Power Dissipation	250	mW
	Derate Above 25°C	2.0	mW/°C
$R_{\theta JA}$	Thermal Resistance, Junction−to−Ambient	500	°C/W

2. PCB size: FR−4, 76 mm x 114 mm x 1.57 mm (3.0 inch x 4.5 inch x 0.062 inch) with minimum land pattern size.

MARKING DIAGRAM

A = Assembly Site
C945Y = Specific Device Code
Y = Year of Production
WW = Work Week

ORDERING INFORMATION

Device	Package	Shipping
KSC945CYTA	TO−92 3 LF (Pb−Free)	2,000 Units / FNFLD
KSC945YTA	TO−92 3 LF (Pb−Free)	2,000 Units / FNFLD

DISCONTINUED (Note 1)

KSC945YBU	TO−92 3 (Pb−Free)	10,000 Units / Bulk

1. **DISCONTINUED:** This device is not recommended for new design. Please contact your **onsemi** representative for information. The most current information on this device may be available on www.onsemi.com.

© Semiconductor Components Industries, LLC, 2002

ELECTRICAL CHARACTERISTICS (T_A = 25°C unless otherwise noted.)

Symbol	Parameter	Conditions	Min	Typ	Max	Unit
BV_{CBO}	Collector−Base Breakdown Voltage	I_C = 100 μA, I_E = 0	60	–	–	V
BV_{CEO}	Collector−Emitter Breakdown Voltage	I_C = 10 mA, I_B = 0	50	–	–	V
BV_{EBO}	Emitter−Base Breakdown Voltage	I_E = 10 μA, I_C = 0	5	–	–	V
I_{CBO}	Collector Cut−Off Current	V_{CB} = 40 V, I_E = 0	–	–	0.1	μA
I_{EBO}	Emitter Cut−Off Current	V_{EB} = 3 V, I_C = 0	–	–	0.1	μA
h_{FE}	DC Current Gain	V_{CE} = 6 V, I_C = 1.0 mA	120	–	240	
V_{CE}(sat)	Collector−Emitter Saturation Voltage	I_C = 100 mA, I_B = 10 mA	–	0.15	0.30	V
f_T	Current Gain Bandwidth Product	V_{CE} = 6 V, I_C = 10 mA	–	300	–	MHz
C_{ob}	Output Capacitance	V_{CB} = 6 V, I_E = 0, f = 1 MHz	–	2.5	–	pF
NF	Noise Figure	V_{CE} = 6 V, I_C = 0.5 mA, f = 1 kHz, R_S = 500 Ω	–	4.0	–	dB

Product parametric performance is indicated in the Electrical Characteristics for the listed test conditions, unless otherwise noted. Product performance may not be indicated by the Electrical Characteristics if operated under different conditions.

TYPICAL CHARACTERISTICS

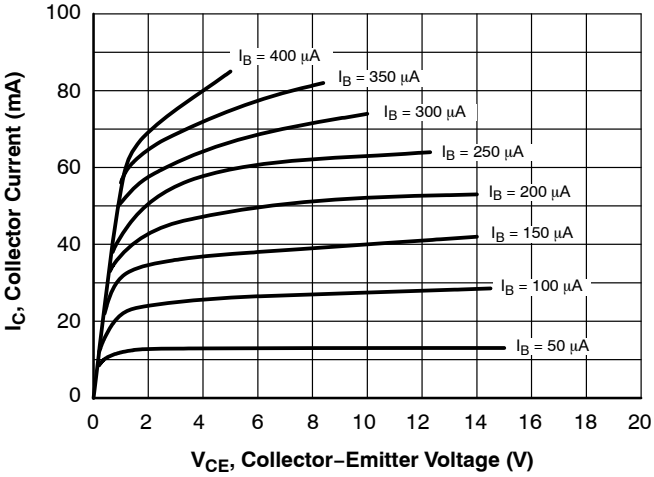

Figure 1. Static Characteristic

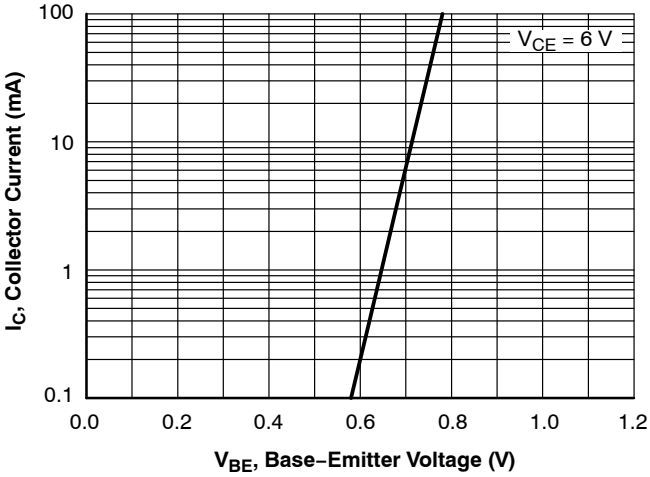

Figure 2. Transfer Characteristic

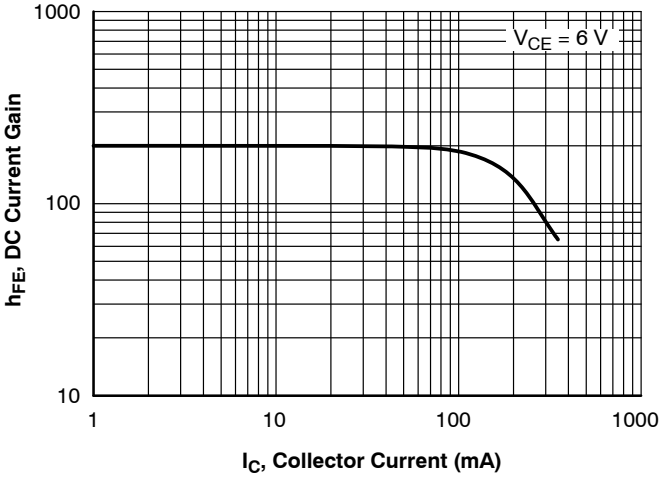

Figure 3. DC Current Gain

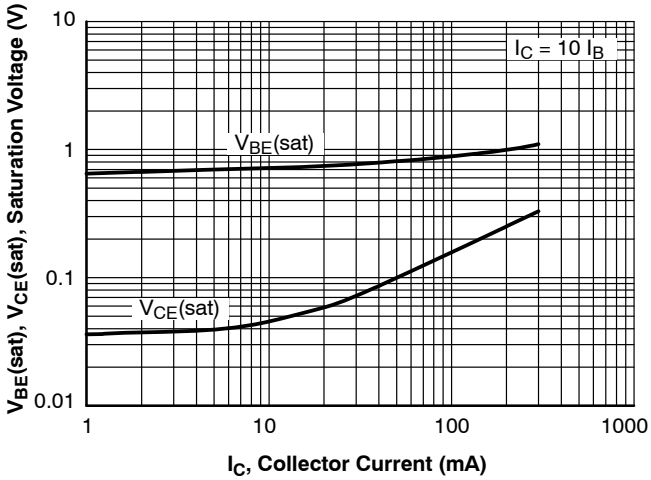

Figure 4. Base−Emitter Saturation Voltage and Collector−Emitter Saturation Voltage

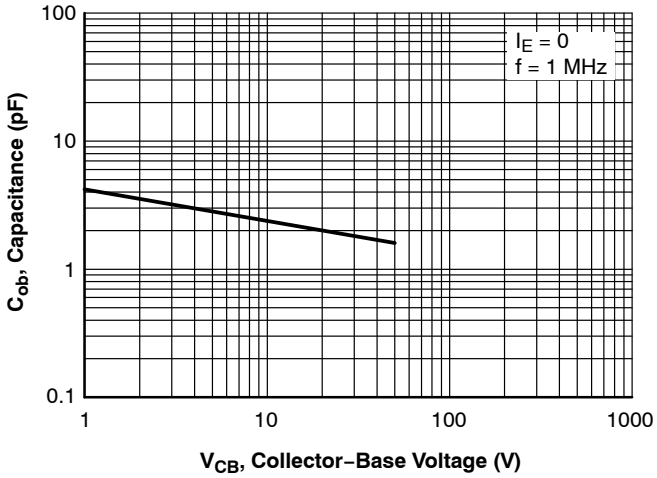

Figure 5. Output Capacitance

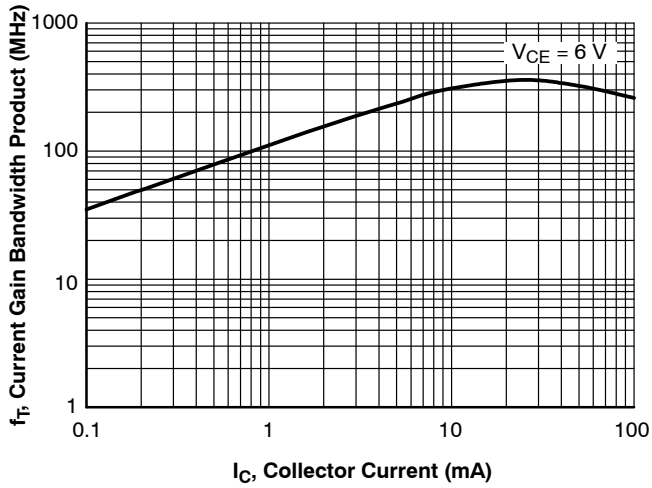

Figure 6. Current Gain Bandwidth Product

TO−92 3 4.825x4.76
CASE 135AN
ISSUE O

DATE 31 JUL 2016

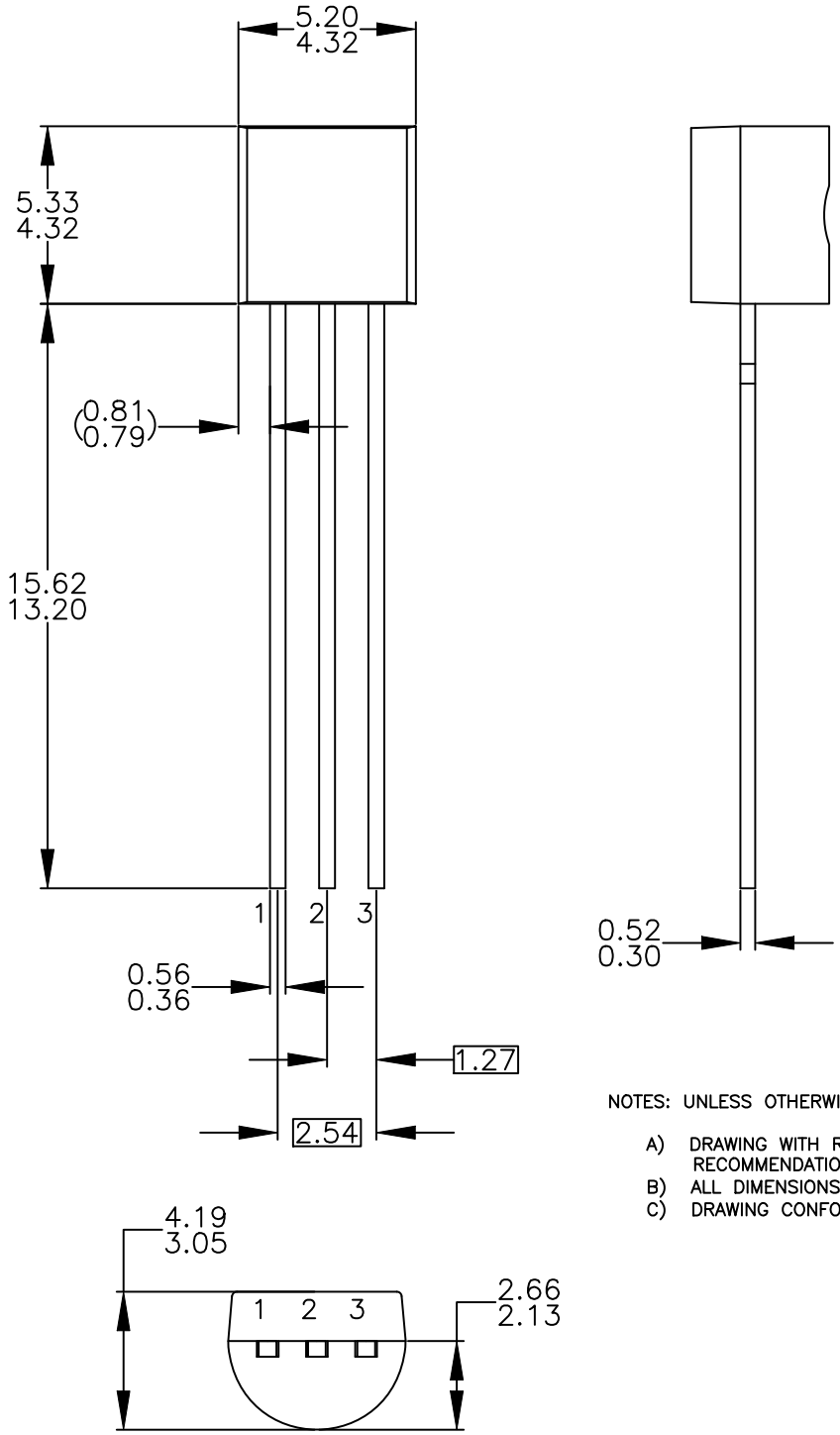

NOTES: UNLESS OTHERWISE SPECIFIED

A) DRAWING WITH REFERENCE TO JEDEC TO−92 RECOMMENDATIONS.
B) ALL DIMENSIONS ARE IN MILLIMETERS.
C) DRAWING CONFORMS TO ASME Y14.5M−2009.

DOCUMENT NUMBER:	**98AON13880G**	Electronic versions are uncontrolled except when accessed directly from the Document Repository. Printed versions are uncontrolled except when stamped "CONTROLLED COPY" in red.
DESCRIPTION:	**TO−92 3 4.825X4.76**	**PAGE 1 OF 1**

onsemi and onsemi are trademarks of Semiconductor Components Industries, LLC dba **onsemi** or its subsidiaries in the United States and/or other countries. **onsemi** reserves the right to make changes without further notice to any products herein. **onsemi** makes no warranty, representation or guarantee regarding the suitability of its products for any particular purpose, nor does **onsemi** assume any liability arising out of the application or use of any product or circuit, and specifically disclaims any and all liability, including without limitation special, consequential or incidental damages. **onsemi** does not convey any license under its patent rights nor the rights of others.

TO−92 3 4.83x4.76 LEADFORMED
CASE 135AR
ISSUE O

DATE 30 SEP 2016

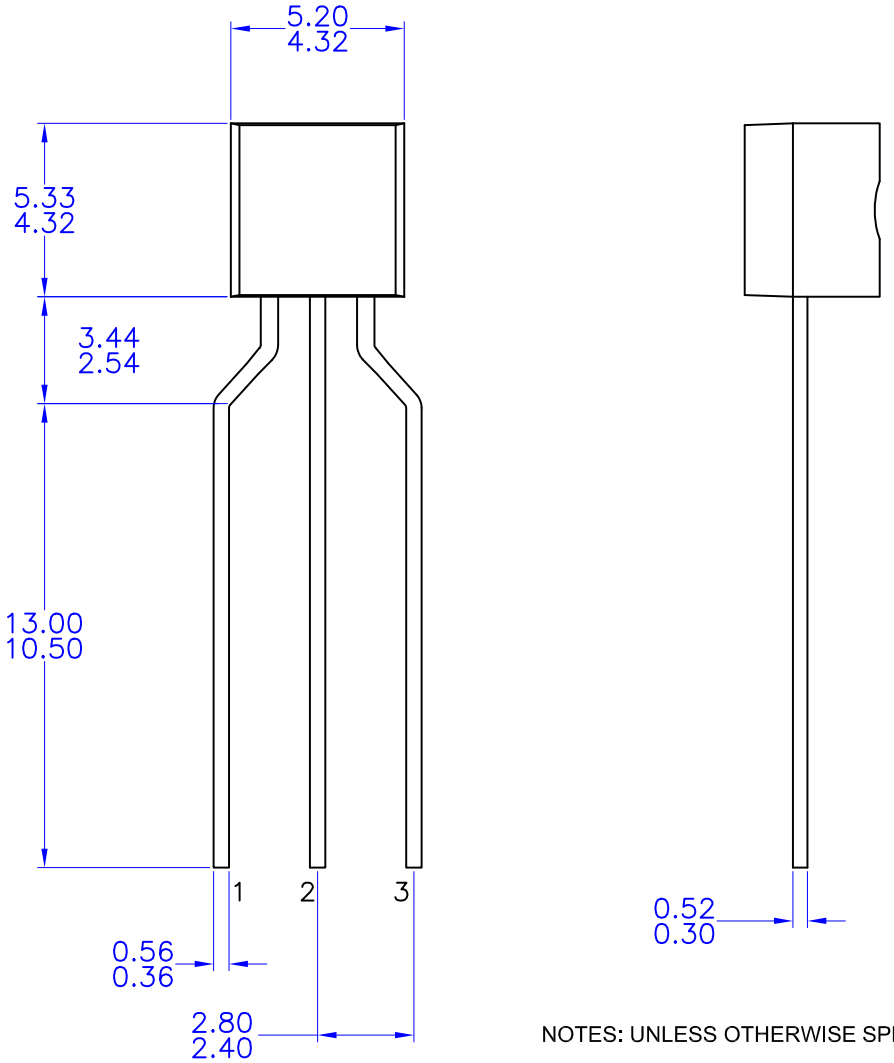

NOTES: UNLESS OTHERWISE SPECIFIED

A) DRAWING WITH REFERENCE TO JEDEC TO-92 RECOMMENDATIONS.
B) ALL DIMENSIONS ARE IN MILLIMETERS.
C) DRAWING CONFORMS TO ASME Y14.5M-1994

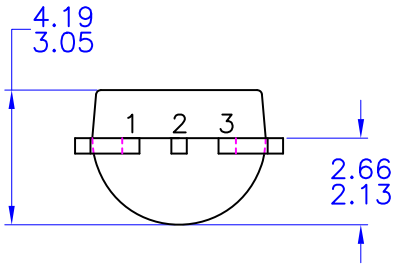

DOCUMENT NUMBER:	**98AON13879G**	Electronic versions are uncontrolled except when accessed directly from the Document Repository. Printed versions are uncontrolled except when stamped "CONTROLLED COPY" in red.
DESCRIPTION:	**TO−92 3 4.83X4.76 LEADFORMED**	**PAGE 1 OF 1**

onsemi and onsemi are trademarks of Semiconductor Components Industries, LLC dba **onsemi** or its subsidiaries in the United States and/or other countries. **onsemi** reserves the right to make changes without further notice to any products herein. **onsemi** makes no warranty, representation or guarantee regarding the suitability of its products for any particular purpose, nor does **onsemi** assume any liability arising out of the application or use of any product or circuit, and specifically disclaims any and all liability, including without limitation special, consequential or incidental damages. **onsemi** does not convey any license under its patent rights nor the rights of others.

onsemi, onsemi, and other names, marks, and brands are registered and/or common law trademarks of Semiconductor Components Industries, LLC dba "**onsemi**" or its affiliates and/or subsidiaries in the United States and/or other countries. **onsemi** owns the rights to a number of patents, trademarks, copyrights, trade secrets, and other intellectual property. A listing of **onsemi**'s product/patent coverage may be accessed at www.onsemi.com/site/pdf/Patent−Marking.pdf. **onsemi** reserves the right to make changes at any time to any products or information herein, without notice. The information herein is provided "as−is" and **onsemi** makes no warranty, representation or guarantee regarding the accuracy of the information, product features, availability, functionality, or suitability of its products for any particular purpose, nor does **onsemi** assume any liability arising out of the application or use of any product or circuit, and specifically disclaims any and all liability, including without limitation special, consequential or incidental damages. Buyer is responsible for its products and applications using **onsemi** products, including compliance with all laws, regulations and safety requirements or standards, regardless of any support or applications information provided by **onsemi**. "Typical" parameters which may be provided in **onsemi** data sheets and/or specifications can and do vary in different applications and actual performance may vary over time. All operating parameters, including "Typicals" must be validated for each customer application by customer's technical experts. **onsemi** does not convey any license under any of its intellectual property rights nor the rights of others. **onsemi** products are not designed, intended, or authorized for use as a critical component in life support systems or any FDA Class 3 medical devices or medical devices with a same or similar classification in a foreign jurisdiction or any devices intended for implantation in the human body. Should Buyer purchase or use **onsemi** products for any such unintended or unauthorized application, Buyer shall indemnify and hold **onsemi** and its officers, employees, subsidiaries, affiliates, and distributors harmless against all claims, costs, damages, and expenses, and reasonable attorney fees arising out of, directly or indirectly, any claim of personal injury or death associated with such unintended or unauthorized use, even if such claim alleges that **onsemi** was negligent regarding the design or manufacture of the part. **onsemi** is an Equal Opportunity/Affirmative Action Employer. This literature is subject to all applicable copyright laws and is not for resale in any manner.

ADDITIONAL INFORMATION

TECHNICAL PUBLICATIONS:
Technical Library: www.onsemi.com/design/resources/technical−documentation
onsemi Website: www.onsemi.com

ONLINE SUPPORT: www.onsemi.com/support
For additional information, please contact your local Sales Representative at
www.onsemi.com/support/sales