NLAS4685

Ultra-Low Resistance Dual SPDT Analog Switch

The NLAS4685 is an advanced CMOS analog switch fabricated in Sub−micron silicon gate CMOS technology. The device is a dual Independent Single Pole Double Throw (SPDT) switch featuring Ultra−Low R_{ON} of 0.8 Ω, for the Normally Closed (NC) switch and for the Normally Opened switch (NO) at 2.7 V.

The part also features guaranteed Break Before Make switching, assuring the switches never short the driver.

The NLAS4685 is available in a 2.0 x 1.5 mm bumped die array, with a 3 x 4 arrangement of solder bumps. The pitch of the solder bumps is 0.5 mm for easy handling.

Features

- Ultra−Low R_{ON}, < 0.8 Ω at 2.7 V
- Threshold Adjusted to Function with 1.8 V Control at V_{CC} = 2.7−3.3 V
- Single Supply Operation from 1.8−5.5 V
- Tiny 2 x 1.5 mm Bumped Die
- Low Crosstalk, < 81 dB at 100 kHz
- Full 0−V_{CC} Signal Handling Capability
- High Isolation, −65 dB at 100 kHz
- Low Standby Current, < 50 nA
- Low Distortion, < 0.14% THD
- R_{ON} Flatness of 0.15 Ω
- Pin for Pin Replacement for MAX4685
- Pb−Free Package is Available

Applications

- Cell Phone
- Speaker Switching
- Power Switching (Up to 100 mA)
- Modems
- Automotive

ON Semiconductor®

http://onsemi.com



A1

Microbump−10
CASE 489AA

MARKING DIAGRAM

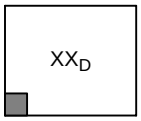

XX = Device Code
D = Date Code

PIN CONNECTIONS AND LOGIC DIAGRAM

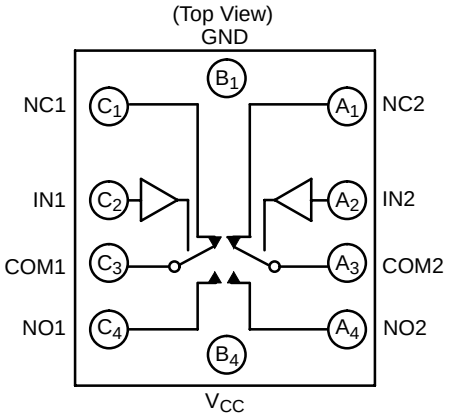

FUNCTION TABLE

IN 1, 2	NO 1, 2	NC 1, 2
0	OFF	ON
1	ON	OFF

ORDERING INFORMATION

Device	Package	Shipping†
NLAS4685FCT1	Microbump	3000 Tape/Reel
NLAS4685FCT1G	Microbump (Pb−Free)	3000 Tape/Reel

†For information on tape and reel specifications, including part orientation and tape sizes, please refer to our Tape and Reel Packaging Specification Brochure, BRD8011/D.

© Semiconductor Components Industries, LLC, 2005

MAXIMUM RATINGS

Symbol	Parameter	Value	Unit
V_{CC}	Positive DC Supply Voltage	−0.5 to +7.0	V
V_{IS}	Analog Input Voltage (V_{NO}, V_{NC}, or V_{COM}) (Note 1)	$-0.5 \le V_{IS} \le V_{CC} + 0.5$	V
V_{IN}	Digital Select Input Voltage	$-0.5 \le V_I \le +7.0$	V
I_{IK}	DC Current, Into or Out of Any Pin	±50	mA

Maximum ratings are those values beyond which device damage can occur. Maximum ratings applied to the device are individual stress limit values (not normal operating conditions) and are not valid simultaneously. If these limits are exceeded, device functional operation is not implied, damage may occur and reliability may be affected.

1. Signal voltage on NC, NO, and COM exceeding VCC or GND are clamped by the internal diodes. Limit forward diode current to maximum current rating.

RECOMMENDED OPERATING CONDITIONS

Symbol	Parameter		Min	Max	Unit
V_{CC}	DC Supply Voltage		1.8	5.5	V
V_{IN}	Digital Select Input Voltage		GND	5.5	V
V_{IS}	Analog Input Voltage (NC, NO, COM)		GND	V_{CC}	V
T_A	Operating Temperature Range		−55	+125	°C
t_r, t_f	Input Rise or Fall Time, SELECT	V_{CC} = 3.3 V ± 0.3 V V_{CC} = 5.0 V ± 0.5 V	0 0	100 20	ns/V

DC CHARACTERISTICS − Digital Section (Voltages Referenced to GND)

Symbol	Parameter	Condition	V_{CC} ±10%	Guaranteed Limit			Unit
				−55°C to 25°C	<85°C	<125°C	
V_{IH}	Minimum High−Level Input Voltage, Select Inputs		2.0 2.5 3.0 5.0	1.4 1.4 1.4 2.0	1.4 1.4 1.4 2.0	1.4 1.4 1.4 2.0	V
V_{IL}	Maximum Low−Level Input Voltage, Select Inputs		2.0 2.5 3.0 5.0	0.5 0.5 0.5 0.8	0.5 0.5 0.5 0.8	0.5 0.5 0.5 0.8	V
I_{IN}	Maximum Input Leakage Current, Select Inputs	V_{IN} = 5.5 V or GND	5.5	± 1.0	± 1.0	± 1.0	μA
I_{OFF}	Power Off Leakage Current	V_{IN} = 5.5 V or GND	0	±10	±10	±10	μA
I_{CC}	Maximum Quiescent Supply Current	Select and V_{IS} = V_{CC} or GND	5.5	± 180	± 200	± 200	nA

DC ELECTRICAL CHARACTERISTICS − Analog Section

Symbol	Parameter	Condition	V_{CC} ±10%	Guaranteed Maximum Limit						Unit
				−55°C to 25°C		<85°C		<125°C		
				Min	Max	Min	Max	Min	Max	
R_{ON} (NC, NO)	"ON" Resistance (Note 2)	$V_{IN} \geq V_{IH}$ V_{IS} = GND to V_{CC} $I_{IN}I \leq 100$ mA	2.5 3.0 5.0		2.0 0.8 0.8		2.0 0.8 0.8		2.0 1.0 0.9	Ω
R_{FLAT} (NC, NO)	On−Resistance Flatness (Notes 2, 4)	I_{COM} = 100 mA V_{IS} = 0 to V_{CC}	2.5 3.0 5.0		0.35 0.35 0.35		0.35 0.35 0.35		0.35 0.35 0.35	Ω
ΔR_{ON}	On−Resistance Match Between Channels (Notes 2 and 3)	V_{IS} = 1.3 V; I_{COM} = 100 mA V_{IS} = 1.5 V; I_{COM} = 100 mA V_{IS} = 2.8 V; I_{COM} = 100 mA	2.5 3.0 5.0		0.18 0.06 0.06		0.18 0.06 0.06		0.18 0.06 0.06	Ω
$I_{NC(OFF)}$ $I_{NO(OFF)}$	NC or NO Off Leakage Current (Figure 10)	V_{IN} = V_{IL} or V_{IH} V_{NO} or V_{NC} = 1.0 V_{COM} = 4.5 V	5.5	−1	1	−10	10	−150	150	nA
$I_{COM(ON)}$	COM ON Leakage Current (Figure 10)	V_{IN} = V_{IL} or V_{IH} V_{NO} 1.0 V or 4.5 V with V_{NC} floating or V_{NC} 1.0 V or 4.5 V with V_{NO} floating V_{COM} = 1.0 V or 4.5 V	5.5	−1	1	−10	10	−150	150	nA

2. Guaranteed by design. Resistance measurements do not include test circuit or package resistance.
3. $\Delta R_{ON} = R_{ON(MAX)} - R_{ON(MIN)}$ between all switches.
4. Flatness is defined as the difference between the maximum and minimum value of on−resistance as measured over the specified analog signal ranges.

AC ELECTRICAL CHARACTERISTICS (Input $t_r = t_f = 3.0$ ns)

Symbol	Parameter	Test Conditions	V_{CC} (V)	V_{IS} (V)	Guaranteed Maximum Limit							Unit
					−55°C to 25°C			<85°C		<125°C		
					Min	Typ*	Max	Min	Max	Min	Max	
t_{ON}	Turn−On Time	R_L = 50 Ω, C_L = 35 pF (Figures 2 and 3)	2.5 3.0 5.0	1.3 1.5 2.8			55 50 30		65 60 35		70 60 35	ns
t_{OFF}	Turn−Off Time	R_L = 50 Ω, C_L = 35 pF (Figures 2 and 3)	2.5 3.0 5.0	1.3 1.5 2.8			55 50 25		65 60 30		70 60 30	ns
t_{BBM}	Minimum Break−Before−Make Time	V_{IS} = 3.0 R_L = 300 Ω, C_L = 35 pF (Figure 1)	3.0	1.5	2	15						ns

		Typical @ 25, V_{CC} = 5.0 V	V_{CC} = 3.0 V	
C_{NC} Off	NC Off Capacitance, f = 1 MHz		208	pF
C_{NO} Off	NO Off Capacitance, f = 1 MHz		102	
C_{NC} On	NC On Capacitance, f = 1 MHz		547	
C_{NO} On	NO On Capacitance, f = 1 MHz		431	

*Typical Characteristics are at 25°C.

ADDITIONAL APPLICATION CHARACTERISTICS (Voltages Referenced to GND Unless Noted) (Note 6)

Symbol	Parameter	Condition	V_{CC} V	Typical 25°C	Unit
BW	Maximum On−Channel −3dB Bandwidth or Minimum Frequency Response	V_{IN} = 0 dBm NC/NO V_{IN} centered between V_{CC} and GND (Figure 4)	3.0	11.5	MHz
V_{ONL}	Maximum Feed−through On Loss	V_{IN} = 0 dBm @ 100 kHz to 50 MHz V_{IN} centered between V_{CC} and GND (Figure 4)	3.0	−0.05	dB
V_{ISO}	Off−Channel Isolation	f = 100 kHz; V_{IS} = 1 V RMS; C_L = 5 nF V_{IN} centered between V_{CC} and GND(Figure 4)	3.0	−65	dB
Q	Charge Injection Select Input to Common I/O	V_{IN} = $V_{CC\ to}$ GND, R_{IS} = 0 Ω, C_L = 1 nF Q = C_L − ΔV_{OUT} (Figure 5)	3.0 5.0	15 20	pC
THD	Total Harmonic Distortion THD + Noise	F_{IS} = 20 Hz to 20 kHz, R_L = R_{gen} = 600 Ω, C_L = 50 pF V_{IS} = 1 V RMS	3.0	0.14	%
VCT	Channel−to−Channel Crosstalk	f = 100 kHz; V_{IS} = 1 V RMS, C_L = 5 pF, R_L = 50 Ω V_{IN} centered between V_{CC} and GND (Figure 4)	3.0	−81	dB

5. Off−Channel Isolation = 20log10 (Vcom/Vno), Vcom = output, Vno = input to off switch.
6. −40°C specifications are guaranteed by design.

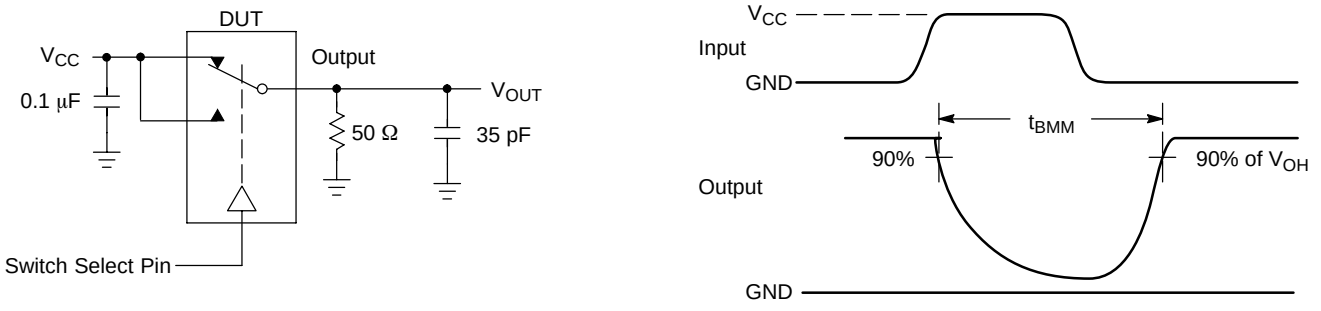

Figure 1. t_{BBM} (Time Break−Before−Make)

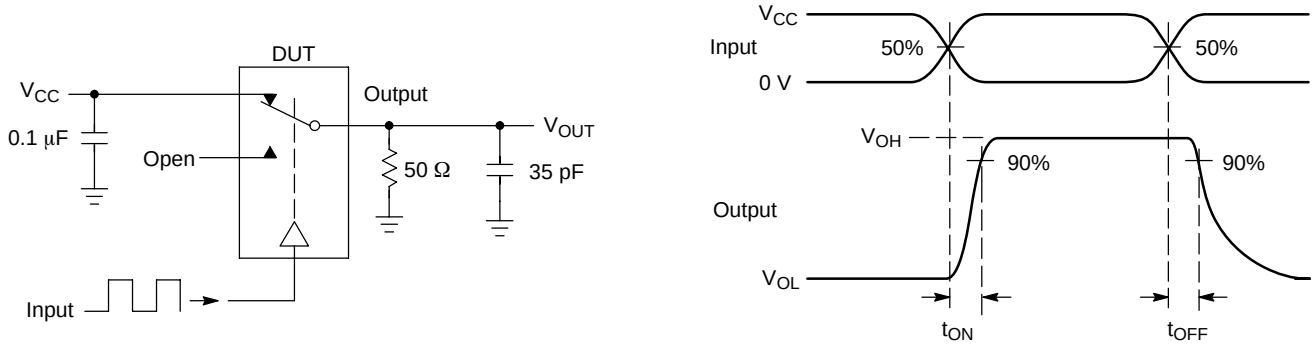

Figure 2. t_{ON}/t_{OFF}

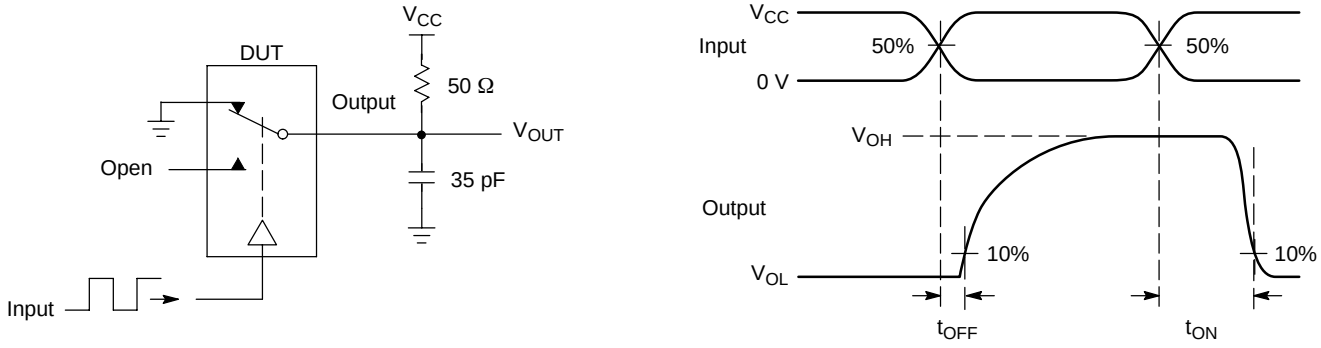

Figure 3. t_{ON}/t_{OFF}

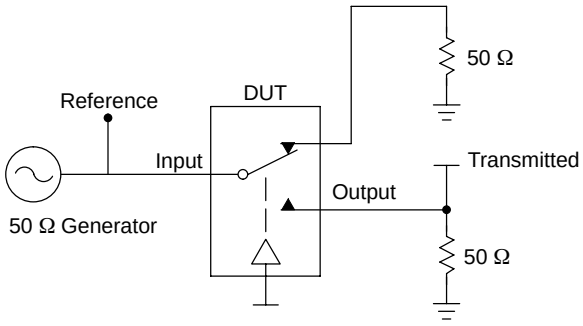

Channel switch control/s test socket is normalized. Off isolation is measured across an off channel. On loss is the bandwidth of an On switch. V_{ISO}, Bandwidth and V_{ONL} are independent of the input signal direction.

V_{ISO} = Off Channel Isolation = 20 Log $\left(\frac{V_{OUT}}{V_{IN}}\right)$ for V_{IN} at 100 kHz

V_{ONL} = On Channel Loss = 20 Log $\left(\frac{V_{OUT}}{V_{IN}}\right)$ for V_{IN} at 100 kHz to 50 MHz

Bandwidth (BW) = the frequency 3 dB below V_{ONL}
V_{CT} = Use V_{ISO} setup and test to all other switch analog input/outputs terminated with 50 Ω

Figure 4. Off Channel Isolation/On Channel Loss (BW)/Crosstalk (On Channel to Off Channel)/V_{ONL}

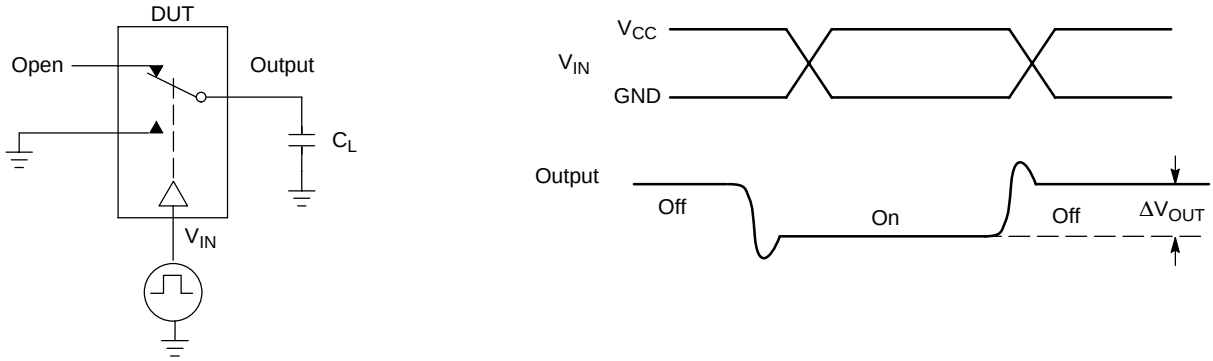

Figure 5. Charge Injection: (Q)

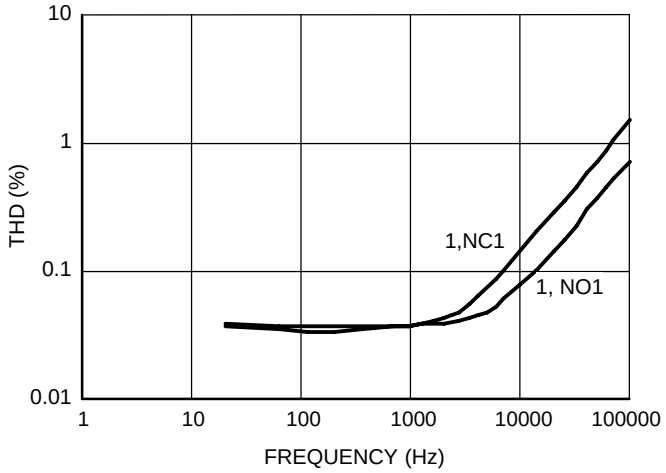

Figure 6. Total Harmonic Distortion Plus Noise versus Frequency

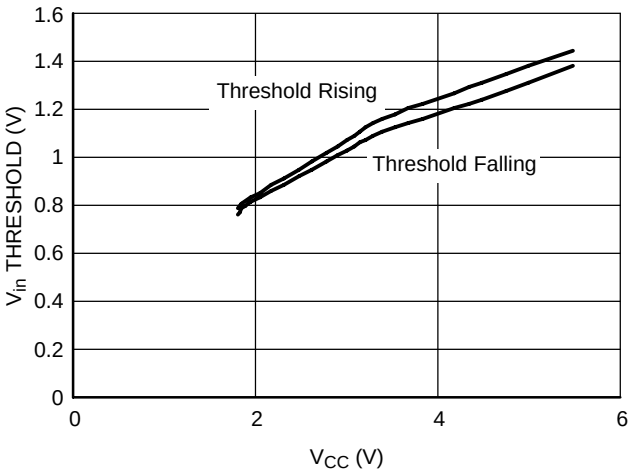

Figure 7. Voltage in Threshold on Logic Pins

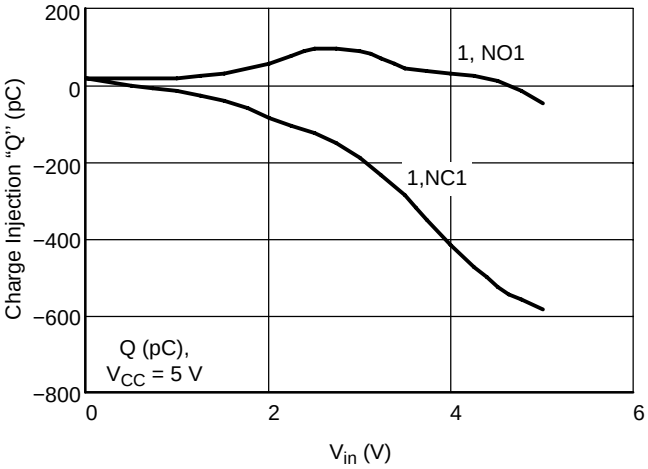

Figure 8. Charge Injection versus V_{is}

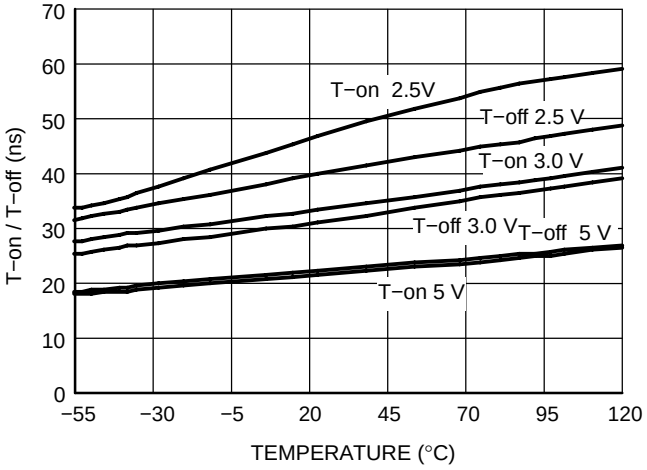

Figure 9. T−on/T−off Time versus Temperature

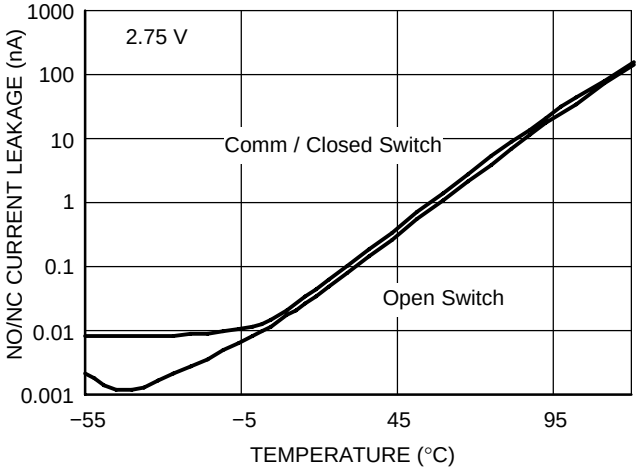

Figure 10. NO/NC Current Leakage Off and On, V_{CC} = 5 V

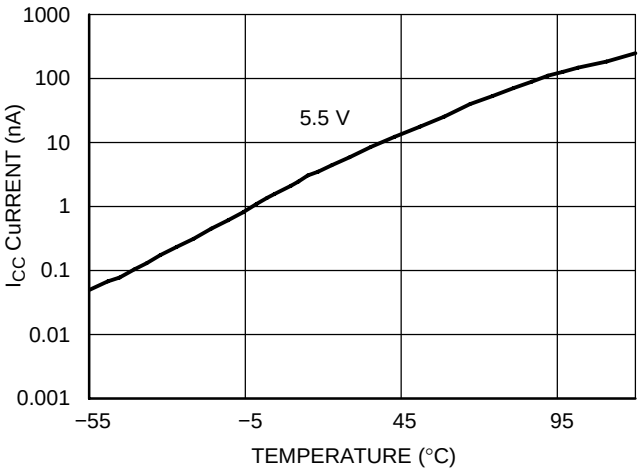

Figure 11. I_{CC} Current Leakage versus Temperature V_{CC} = 5.5 V

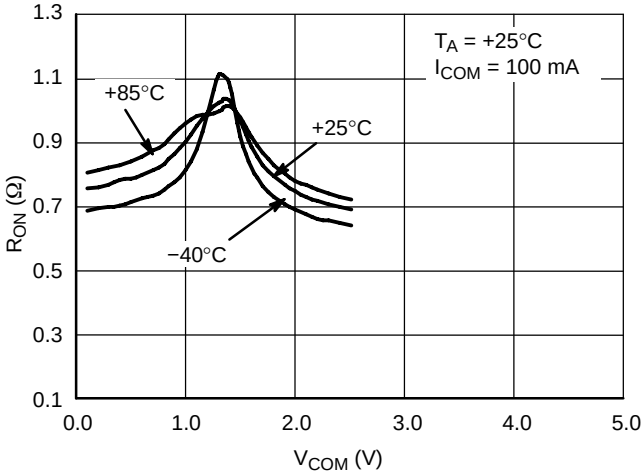

Figure 12. NC/NO On−Resistance versus COM Voltage

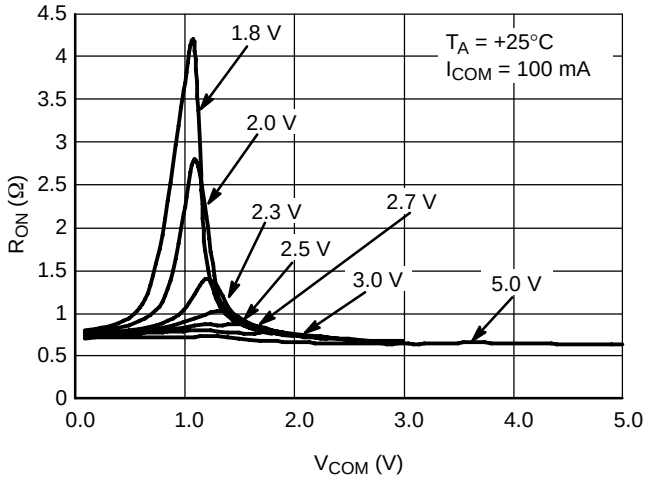

Figure 13. NC/NO On−Resistance versus COM Voltage

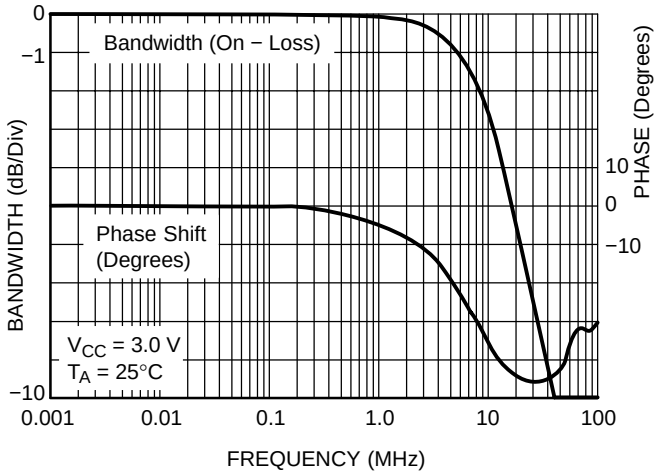

Figure 14. NC/NO Bandwidth and Phase Shift versus Frequency

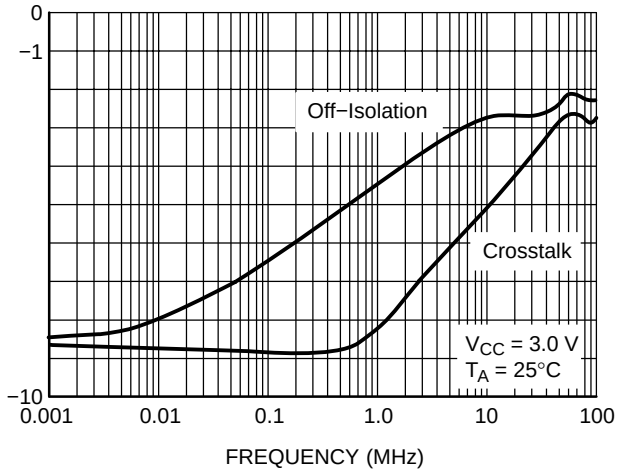

Figure 15. NC/NO Off Isolation and Crosstalk

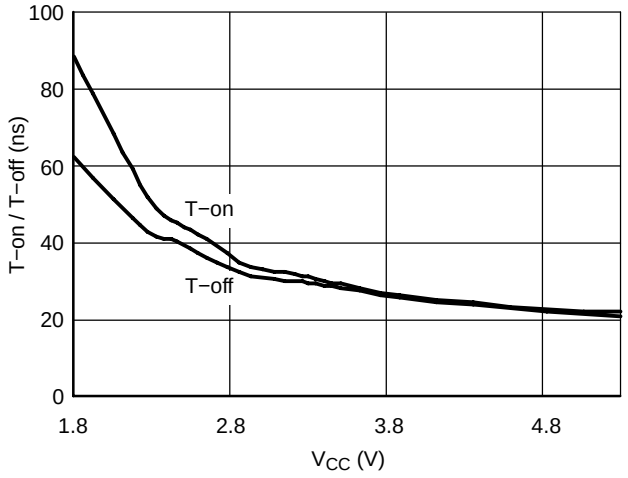

Figure 16. T−on/T−off versus V_{CC}

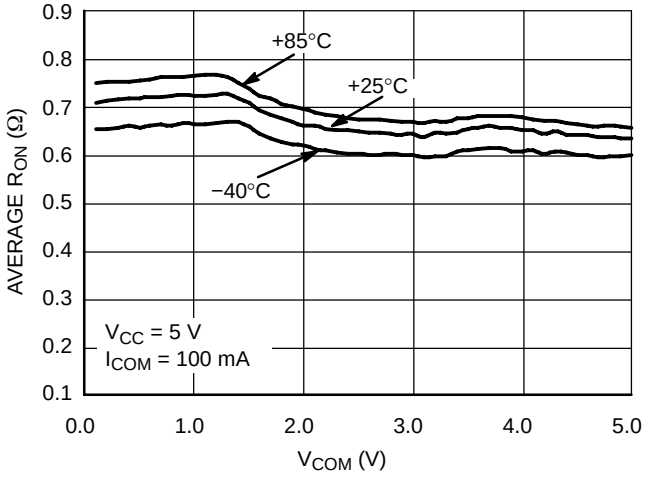

Figure 17. NC/NO On−Resistance versus COM Voltage

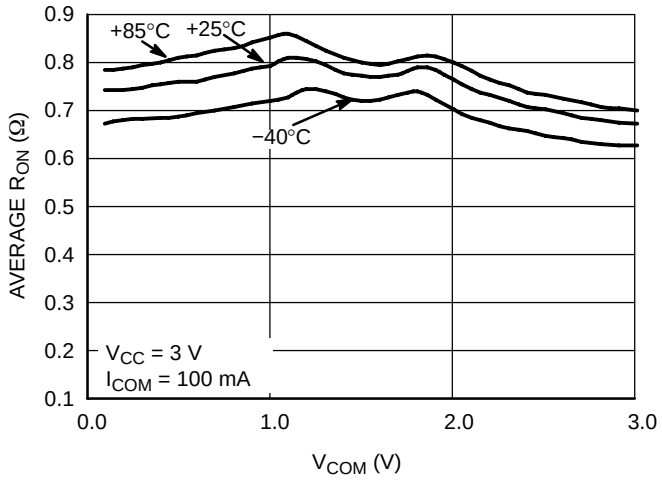

Figure 18. NC/NO On−Resistance versus COM Voltage

10 PIN FLIP−CHIP
CASE 489AA
ISSUE A

DATE 04 MAY 2004



1

SCALE 4:1

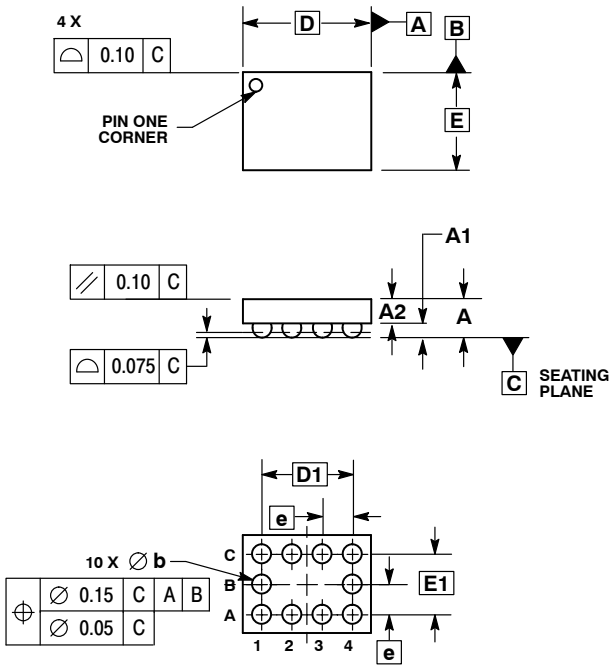

NOTES:
1. DIMENSIONING AND TOLERANCING PER ASME Y14.5M, 1994.
2. CONTROLLING DIMENSION: MILLIMETERS.
3. COPLANARITY APPLIES TO SPHERICAL CROWNS OF SOLDER BALLS.

	MILLIMETERS	
DIM	MIN	MAX
A	−−−	0.650
A1	0.210	0.270
A2	0.280	0.380
D	1.965 BSC	
E	1.465 BSC	
b	0.250	0.350
e	0.500 BSC	
D1	1.500 BSC	
E1	1.000 BSC	

GENERIC MARKING DIAGRAM*

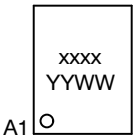

xxxx = Specific Device Code
YY = Year
WW = Work Week

*This information is generic. Please refer to device data sheet for actual part marking. Pb−Free indicator, “G” or microdot “ ▪”, may or may not be present.

DOCUMENT NUMBER:	**98AON12946D**	Electronic versions are uncontrolled except when accessed directly from the Document Repository. Printed versions are uncontrolled except when stamped “CONTROLLED COPY” in red.
DESCRIPTION:	**10 PIN FLIP−CHIP**	**PAGE 1 OF 1**

onsemi and onsemi are trademarks of Semiconductor Components Industries, LLC dba **onsemi** or its subsidiaries in the United States and/or other countries. **onsemi** reserves the right to make changes without further notice to any products herein. **onsemi** makes no warranty, representation or guarantee regarding the suitability of its products for any particular purpose, nor does **onsemi** assume any liability arising out of the application or use of any product or circuit, and specifically disclaims any and all liability, including without limitation special, consequential or incidental damages. **onsemi** does not convey any license under its patent rights nor the rights of others.

onsemi, , and other names, marks, and brands are registered and/or common law trademarks of Semiconductor Components Industries, LLC dba "**onsemi**" or its affiliates and/or subsidiaries in the United States and/or other countries. **onsemi** owns the rights to a number of patents, trademarks, copyrights, trade secrets, and other intellectual property. A listing of **onsemi**'s product/patent coverage may be accessed at www.onsemi.com/site/pdf/Patent−Marking.pdf. **onsemi** reserves the right to make changes at any time to any products or information herein, without notice. The information herein is provided "as−is" and **onsemi** makes no warranty, representation or guarantee regarding the accuracy of the information, product features, availability, functionality, or suitability of its products for any particular purpose, nor does **onsemi** assume any liability arising out of the application or use of any product or circuit, and specifically disclaims any and all liability, including without limitation special, consequential or incidental damages. Buyer is responsible for its products and applications using **onsemi** products, including compliance with all laws, regulations and safety requirements or standards, regardless of any support or applications information provided by **onsemi**. "Typical" parameters which may be provided in **onsemi** data sheets and/or specifications can and do vary in different applications and actual performance may vary over time. All operating parameters, including "Typicals" must be validated for each customer application by customer's technical experts. **onsemi** does not convey any license under any of its intellectual property rights nor the rights of others. **onsemi** products are not designed, intended, or authorized for use as a critical component in life support systems or any FDA Class 3 medical devices or medical devices with a same or similar classification in a foreign jurisdiction or any devices intended for implantation in the human body. Should Buyer purchase or use **onsemi** products for any such unintended or unauthorized application, Buyer shall indemnify and hold **onsemi** and its officers, employees, subsidiaries, affiliates, and distributors harmless against all claims, costs, damages, and expenses, and reasonable attorney fees arising out of, directly or indirectly, any claim of personal injury or death associated with such unintended or unauthorized use, even if such claim alleges that **onsemi** was negligent regarding the design or manufacture of the part. **onsemi** is an Equal Opportunity/Affirmative Action Employer. This literature is subject to all applicable copyright laws and is not for resale in any manner.

ADDITIONAL INFORMATION

TECHNICAL PUBLICATIONS:
Technical Library: www.onsemi.com/design/resources/technical−documentation
onsemi Website: www.onsemi.com

ONLINE SUPPORT: www.onsemi.com/support
For additional information, please contact your local Sales Representative at www.onsemi.com/support/sales