6-Pin DIP Phototransistor Optocouplers

H11AG1M

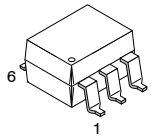

PDIP6
CASE 646BY

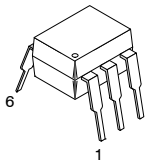

PDIP6
CASE 646BX

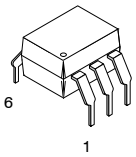

PDIP6
CASE 646BZ

Description

The H11AG1M device consists of a Gallium−Aluminum− Arsenide IRED emitting diode coupled with a silicon phototransistor in a dual in−line package. This device provides the unique feature of high current transfer ratio at both low output voltage and low input current. This makes it ideal for use in low−power logic circuits, telecommunications equipment and portable electronics isolation applications.

Features

- High−Efficiency Low−Degradation Liquid Epitaxial I_{RED}
- Logic Level Compatible, Input and Output Currents, with CMOS and LS/TTL
- High DC Current Transfer Ratio at Low Input Currents (as low as 200 μA)
- Safety and Regulatory Approvals:
  - UL1577, 4,170 VAC_{RMS} for 1 Minute
  - DIN−EN/IEC60747−5−5, 850 V Peak Working Insulation Voltage
- These are Pb−Free Devices

Applications

- CMOS Driven Solid State Reliability
- Telephone Ring Detector
- Digital Logic Isolation

SCHEMATIC

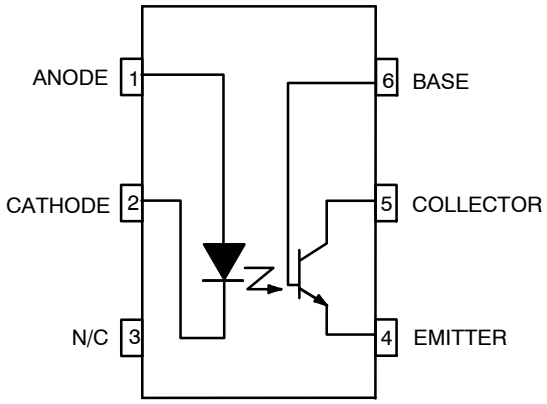

Figure 1. Schematic

MARKING DIAGRAM

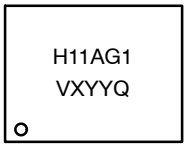

H11AG1	= Device Number
V	= DIN EN/IEC60747−5−5 Option (only appears on component ordered with this option)
X	= One−Digit Year Code
YY	= Digit Work Week
Q	= Assembly Package Code

ORDERING INFORMATION

See detailed ordering and shipping information on page 7 of this data sheet.

© Semiconductor Components Industries, LLC, 2007

SAFETY AND INSULATION RATINGS

Parameter		Characteristic
Installation Classifications per DIN VDE 0110/1.89 Table 1, For Rated Mains Voltage	< 150 V_{RMS}	I – IV
	< 300 V_{RMS}	I – IV
Climatic Classification		55/100/21
Pollution Degree (DIN VDE 0110/1.89)		2
Comparative Tracking Index		175

Symbol	Parameter	Value	Unit
V_{PR}	Input–to–Output Test Voltage, Method A, V_{IORM} x 1.6 = V_{PR}, Type and Sample Test with t_m = 10 s, Partial Discharge < 5 pC	1360	V_{peak}
	Input–to–Output Test Voltage, Method B, V_{IORM} x 1.875 = V_{PR}, 100% Production Test with t_m = 1 s, Partial Discharge < 5 pC	1594	V_{peak}
V_{IORM}	Maximum Working Insulation Voltage	850	V_{peak}
V_{IOTM}	Highest Allowable Over–Voltage	6000	V_{peak}
	External Creepage	≥ 7	mm
	External Clearance	≥ 7	mm
	External Clearance (for Option TV, 0.4” Lead Spacing)	≥ 10	mm
DTI	Distance Through Insulation (Insulation Thickness)	≥ 0.5	mm
T_S	Case Temperature (Note 1)	175	°C
$I_{S,INPUT}$	Input Current (Note 1)	350	mA
$P_{S,OUTPUT}$	Output Power (Note 1)	800	mW
R_{IO}	Insulation Resistance at T_S, V_{IO} = 500 V (Note 1)	> 10^9	Ω

As per DIN EN/IEC 60747–5–5, this optocoupler is suitable for “safe electrical insulation” only within the safety limit data. Compliance with the safety ratings shall be ensured by means of protective circuits.

1. Safety limit values – maximum values allowed in the event of a failure.

ABSOLUTE MAXIMUM RATINGS

Symbol	Parameter	Value	Unit
TOTAL DEVICE			
T_{STG}	Storage Temperature	–40 to +125	°C
T_{OPR}	Operating Temperature	–40 to +100	°C
T_J	Junction Temperature	–40 to +125	°C
T_{SOL}	Lead Solder Temperature	260 for 10 s	°C
P_D	Total Device Power Dissipation @ 25°C(LED plus detector)	225	mW
	Derate Linearly From 25°C	3.5	mW/°C
EMITTER			
I_F	Continuous Forward Current	50	mA
V_R	Reverse Voltage	6.0	W
I_F (pk)	Forward Current – Peak (1 μs pulse 300 pps)	3.0	A
P_D	Led Power Dissipation @T_A = 25°C	75	mW
	Derate Linearly From 25°C	1.0	mW/°C
DETECTOR			
I_C	Continuous Collector Current	50	mA
P_D	Total Power Dissipation @T_A = 25°C	150	mW
	Derate Linearly From 25°C	2.0	mW/°C

Stresses exceeding those listed in the Maximum Ratings table may damage the device. If any of these limits are exceeded, device functionality should not be assumed, damage may occur and reliability may be affected.

ELECTRICAL CHARACTERISTICS

(T_A = 25°C unless otherwise specified)

INDIVIDUAL COMPONENT CHARACTERISTICS

Symbol	Parameter	Test Conditions	Min.	Typ.	Max.	Unit
EMITTER						
V_F	Input Forward Voltage	I_F = 1 mA	–	1.25	1.50	V
I_R	Reverse Leakage Current	V_R = 5 V, T_A = 25°C	–	–	10	μA
C_J	Capacitance	V_F = 0 V, f = 1.0 MHz	–	–	100	pF
DETECTOR						
BV_{CEO}	Breakdown Voltage, Collector−to−Emitter	I_C = 1 mA, I_F = 0	30	–	–	V
BV_{CBO}	Breakdown Voltage, Collector−to−Base	I_C = 100 μA, I_F = 0	70	–	–	V
BV_{ECO}	Breakdown Voltage, Emitter−to−Collector	I_C = 100 μA, I_F = 0	7	–	–	V
I_{CEO}	Leakage Current, Collector−to−Emitter	V_{CE} = 10 V, I_F = 0	–	5	10	nA
C_{CE}	Capacitance	V_{CE} = 10 V, f = 1 MHz	–	10	–	pF

TRANSFER CHARACTERISTICS

Symbol	Characteristics	Test Conditions	Min.	Typ.	Max.	Unit
DC CHARACTERISTICS						
CTR	Current Transfer Ratio	I_F = 1 mA, V_{CE} = 5 V	300	–	–	%
		I_F = 1 mA, V_{CE} = 0.6 V	100	–	–	%
		I_F = 0.2 mA, V_{CE} = 1.5 V	100	–	–	%
$V_{CE(SAT)}$	Saturation Voltage	I_C = 2.0 mA, I_F = 0.5 mA	–	–	0.40	V
AC CHARACTERISTICS (NON−SATURATED SWITCHING TIMES)						
t_{on}	Turn−On Time	R_L = 100 Ω, I_F = 1 mA, V_{CC} = 5 V	–	5	–	μs
t_{off}	Turn−Off Time	RL = 100 Ω, I_F = 1 mA, V_{CC} = 5 V	–	5	–	μs

ISOLATION CHARACTERISTICS

Symbol	Characteristics	Test Conditions	Min.	Typ.	Max.	Unit
V_{ISO}	Input−Output Isolation Voltage	t = 1 Minute	4170	–	–	VAC_{RMS}
C_{ISO}	Isolation Capacitance	V_{I-O} = 0 V, f = 1 MHz	–	0.2	–	pF
R_{ISO}	Isolation Resistance	V_{I-O} = ±500 VDC, T_A = 25°C	10^{11}	–	–	Ω

TYPICAL PERFORMANCE CHARACTERISTICS

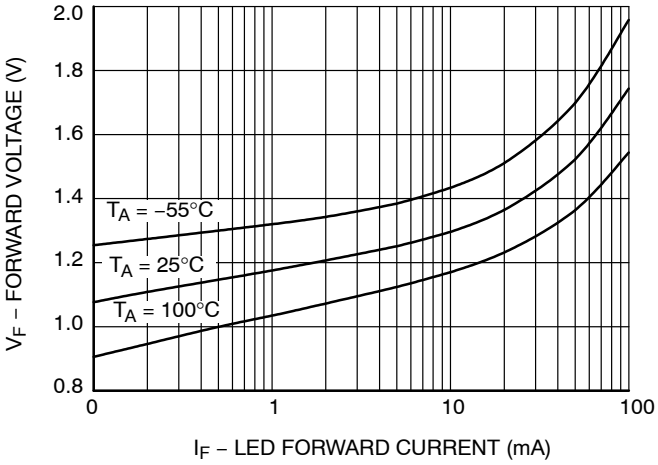

Figure 2. LED Forward Voltage vs. Forward Current

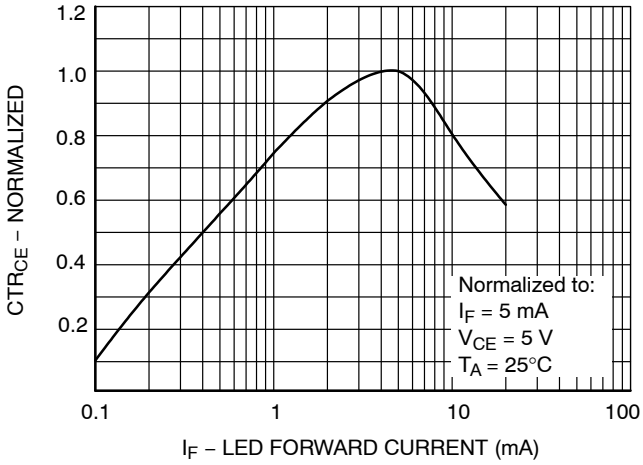

Figure 3. Normalized Current Transfer Ratio vs. Forward Current

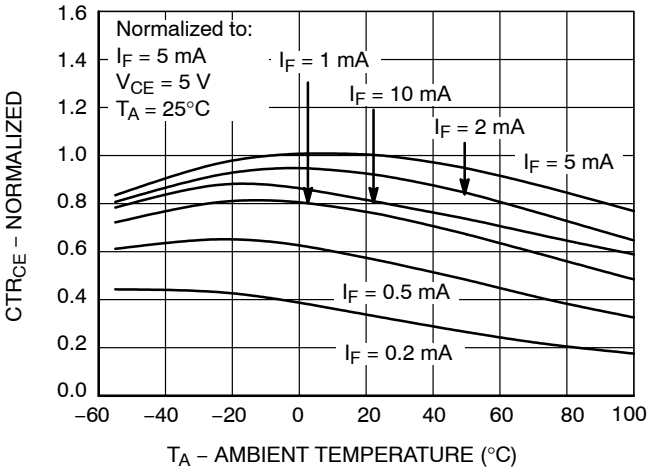

Figure 4. Normalized CTR vs. Temperat

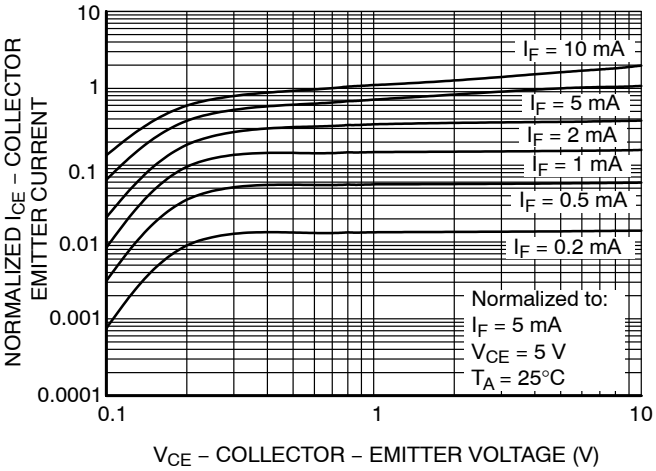

Figure 5. Normalized Collector vs. Collector−Emitter Voltage

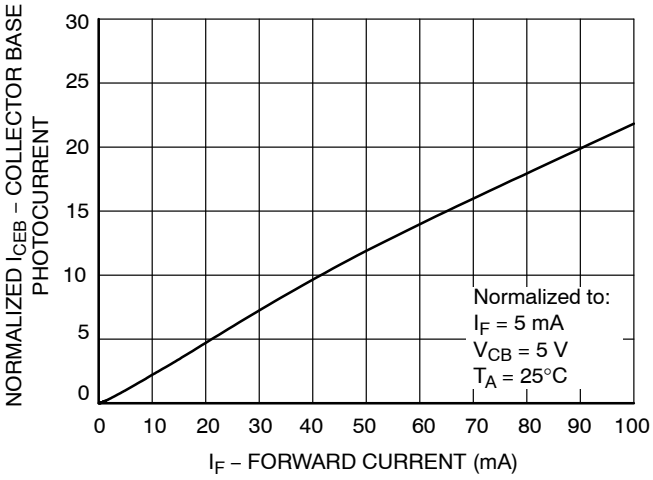

Figure 6. Normalized Collector−Base Photocurrent Ratio vs. Forward Current

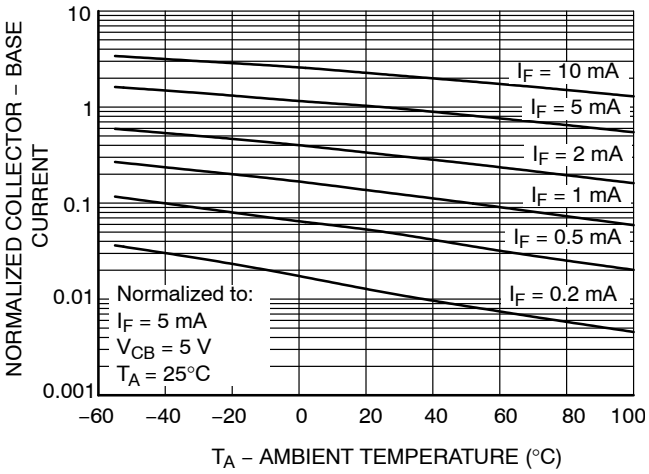

Figure 7. Normalized Collector−Base Current vs. Temperature

TYPICAL PERFORMANCE CURVES (continued)

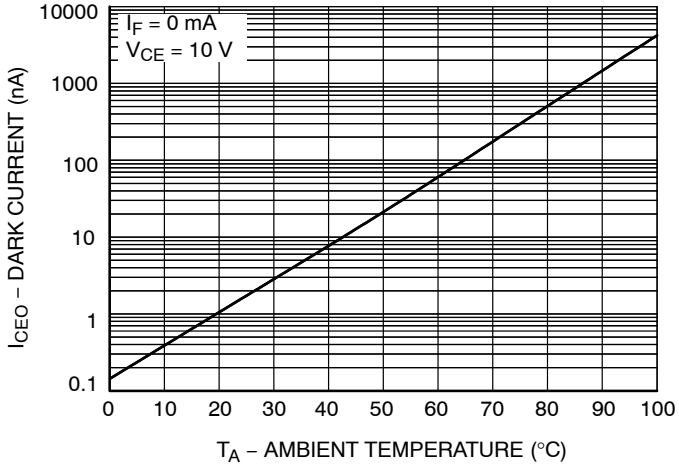

Figure 8. Collector−Emitter Dark Current vs. Ambient Temperature

TYPICAL APPLICATION

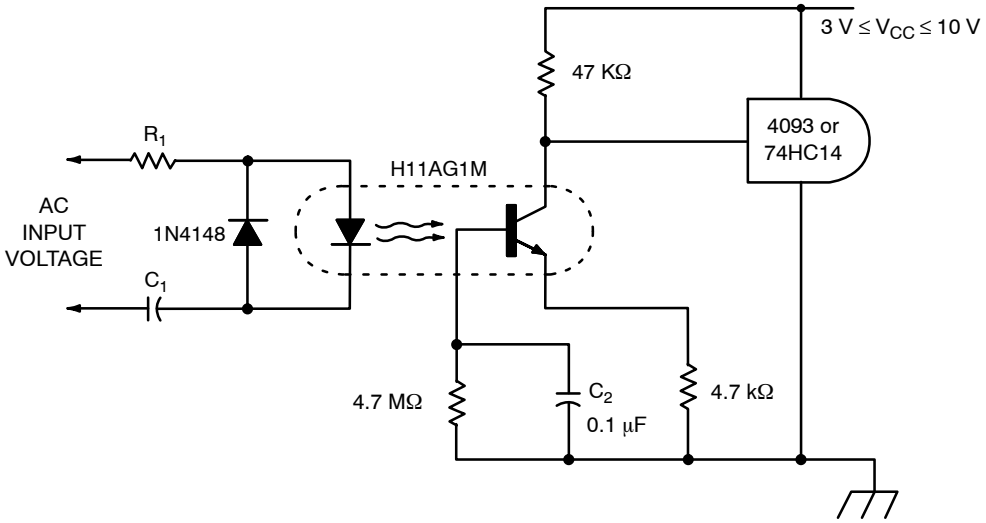

Input	R1	C1	Z
40 – 90 VAC_{RMS} 20 Hz	75 kΩ 1/10 W	0.1 μF 100 V	109 kΩ
95 – 135 VAC_{RMS} 60 Hz	180 kΩ 1/10 W	12 nF 200 V	285 kΩ
200 – 280 VAC_{RMS} 50 / 60 Hz	390 kΩ 1/4 W	6.80 nF 400 V	550 kΩ

DC component of input voltage is ignored due to C1

The H11AG1M uses less input power than the neon bulb traditionally used to monitor telephone and line voltages. Additionally response time can be tailored to ignore telephone dial tap, switching transients and other undesired signals by modifying the value of C2. The high impedance to line voltage also can simply board layout spacing requirements.

Figure 9. Telephone Ring Detector / A.C. Line CMOS Input Isolator

REFLOW PROFILE

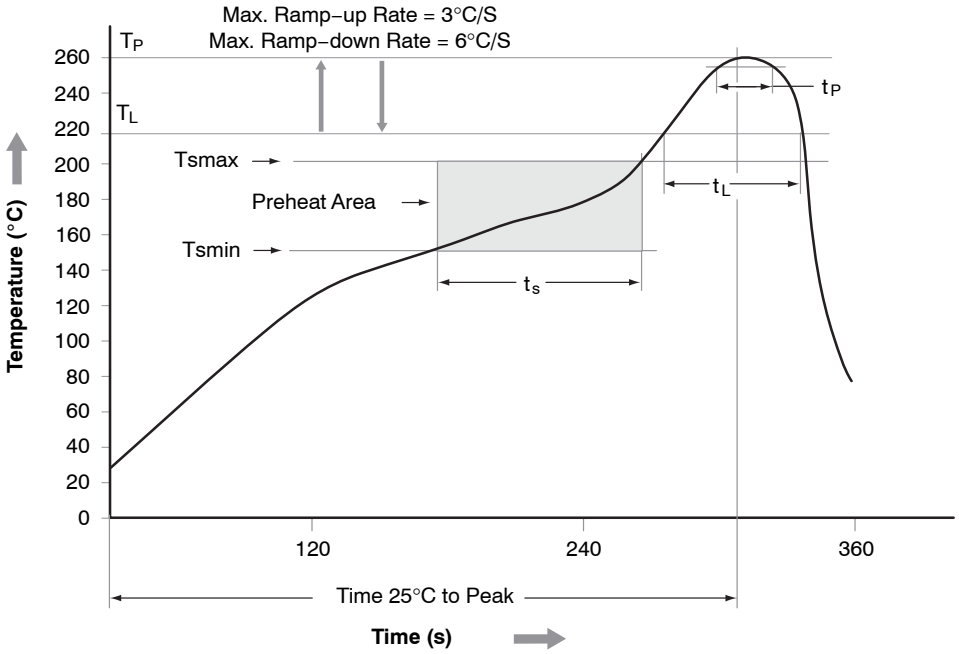

Profile Feature	Pb−Free Assembly Profile
Temperature Min. (Tsmin)	150°C
Temperature Max. (Tsmax)	200°C
Time (t_S) from (Tsmin to Tsmax)	60–120 seconds
Ramp−up Rate (t_L to t_P)	3°C/second max.
Liquidous Temperature (T_L)	217°C
Time (t_L) Maintained Above (T_L)	60–150 seconds
Peak Body Package Temperature	260°C +0°C / –5°C
Time (t_P) within 5°C of 260°C	30 seconds
Ramp−down Rate (T_P to T_L)	6°C/second max.
Time 25°C to Peak Temperature	8 minutes max.

Figure 10. Reflow Profile

ORDERING INFORMATION

Part Number	Package	Shipping†
H11AG1M	DIP 6−Pin	50 Units / Tube
H11AG1SM	SMT 6−Pin (Lead Bend)	50 Units / Tube
H11AG1SR2M	SMT 6−Pin (Lead Bend)	1000 Units / Tape & Reel
H11AG1VM	DIP 6−Pin, DIN EN/IEC60747−5−5 Option	50 Units / Tube
H11AG1SVM	SMT 6−Pin (Lead Bend), DIN EN/IEC60747−5−5 Option	50 Units / Tube
H11AG1SR2VM	SMT 6−Pin (Lead Bend), DIN EN/IEC60747−5−5 Option	1000 Units / Tape & Reel
H11AG1TVM	DIP 6−Pin, 0.4” Lead Spacing, DIN EN/IEC60747−5−5 Option	50 Units / Tube

†For information on tape and reel specifications, including part orientation and tape sizes, please refer to our Tape and Reel Packaging Specifications Brochure, BRD8011/D.

PDIP6 8.51x6.35, 2.54P
CASE 646BX
ISSUE O

DATE 31 JUL 2016

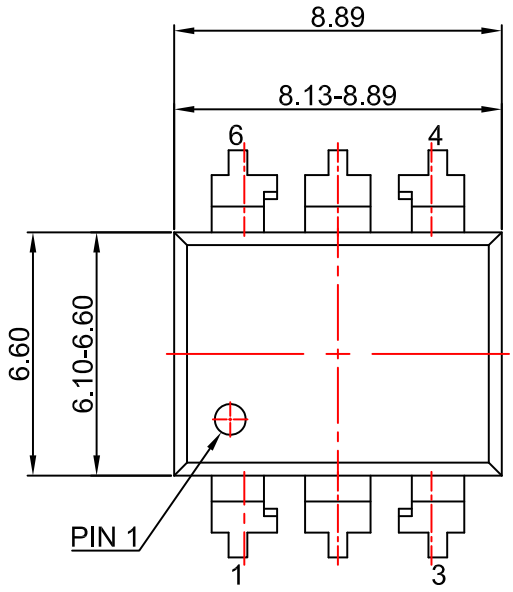

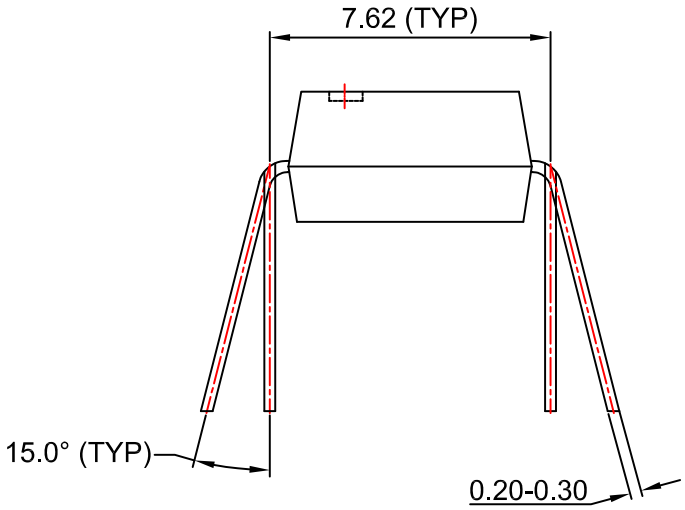

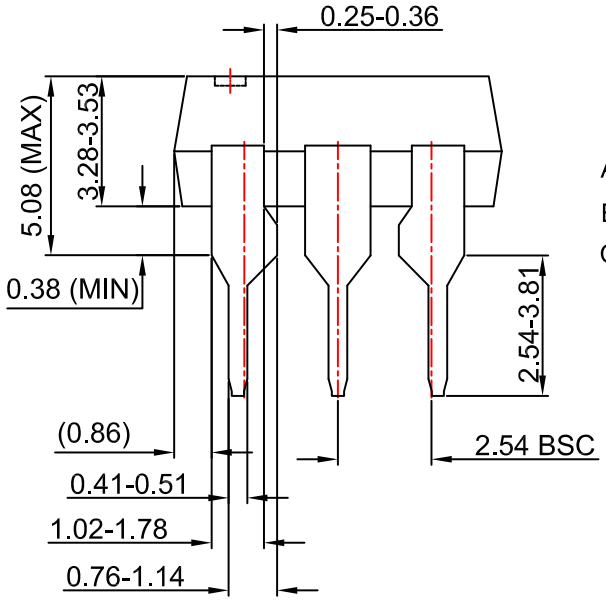

NOTES:

A) NO STANDARD APPLIES TO THIS PACKAGE.

B) ALL DIMENSIONS ARE IN MILLIMETERS.

C) DIMENSIONS ARE EXCLUSIVE OF BURRS, MOLD FLASH, AND TIE BAR EXTRUSION

DOCUMENT NUMBER:	**98AON13449G**	Electronic versions are uncontrolled except when accessed directly from the Document Repository. Printed versions are uncontrolled except when stamped "CONTROLLED COPY" in red.	
DESCRIPTION:	**PDIP6 8.51X6.35, 2.54P**		**PAGE 1 OF 1**

onsemi and onsemi are trademarks of Semiconductor Components Industries, LLC dba **onsemi** or its subsidiaries in the United States and/or other countries. **onsemi** reserves the right to make changes without further notice to any products herein. **onsemi** makes no warranty, representation or guarantee regarding the suitability of its products for any particular purpose, nor does **onsemi** assume any liability arising out of the application or use of any product or circuit, and specifically disclaims any and all liability, including without limitation special, consequential or incidental damages. **onsemi** does not convey any license under its patent rights nor the rights of others.

PDIP6 8.51x6.35, 2.54P
CASE 646BY
ISSUE A

DATE 15 JUL 2019

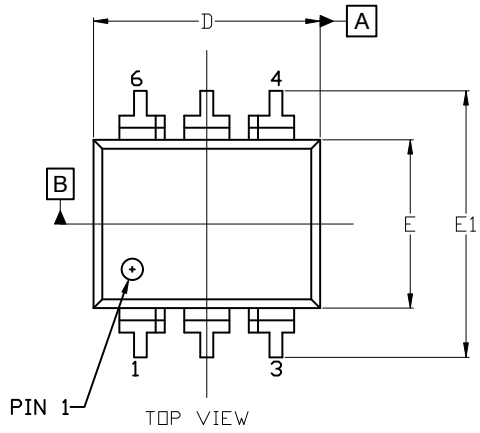

NOTES:
1. DIMENSIONING AND TOLERANCING PER ASME Y14.5M, 2009.
2. CONTROLLING DIMENSION: MILLIMETERS
3. DIMENSIONS A, A1, AND L ARE MEASURED WITH THE PACKAGE SEATED.
4. DIMENSIONS D, D1, AND E1 DO NOT INCLUDE MOLD FLASH OR PROTRUSIONS. MOLD FLASH OR PROTRUSIONS ARE NOT TO EXCEED 2.54mm.
5. PACKAGE CONTOUR IS OPTIONAL (ROUNDED OR SQUARE CORNERS).
6. CENTER LINE OF CORNER LEADS ARE LOCATED BY LOCATING THE CENTER OF FEATURE b2 AND b3.

DIM	MILLIMETERS		
	MIN.	NOM.	MAX.
A	---	---	4.80
A1	0.38	---	---
A2	3.28	3.40	3.53
A3	2.49 REF		
A4	1.89 REF		
b	0.41	0.46	0.51
b1	0.76	0.92	1.14
b2	0.25	0.28	0.36
b3	1.02	1.40	1.78
b4	1.778 REF		
c	0.20	0.25	0.30
D	8.13	8.51	8.89
D1	0.86 REF		
E	6.10	6.35	6.60
E1	8.43	9.17	9.90
E2	8.13 REF		
e	2.54 BSC		
L	0.16	0.52	0.88

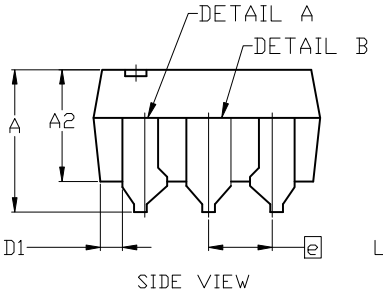

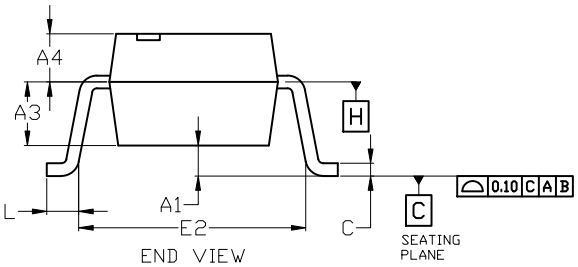

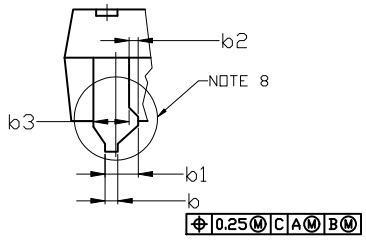

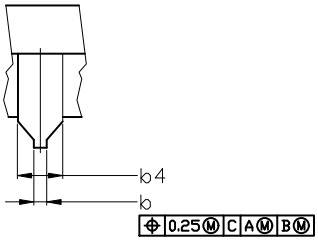

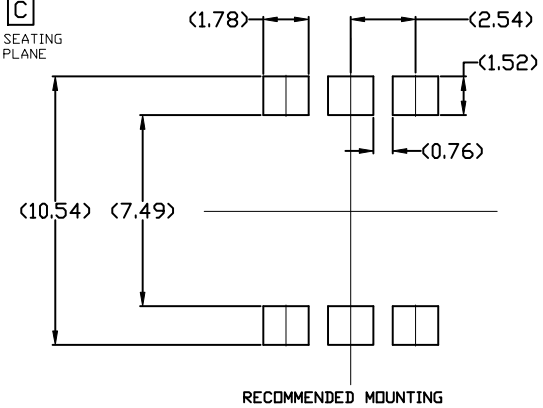

* For additional information on our Pb-Free strategy and soldering details, please download the ON Semiconductor Soldering and Mounting Techniques Reference Manual, SOLDERRM/D.

DOCUMENT NUMBER:	**98AON13450G**	Electronic versions are uncontrolled except when accessed directly from the Document Repository. Printed versions are uncontrolled except when stamped "CONTROLLED COPY" in red.
DESCRIPTION:	**PDIP6 8.51x6.35, 2.54P**	**PAGE 1 OF 1**

onsemi and onsemi are trademarks of Semiconductor Components Industries, LLC dba **onsemi** or its subsidiaries in the United States and/or other countries. **onsemi** reserves the right to make changes without further notice to any products herein. **onsemi** makes no warranty, representation or guarantee regarding the suitability of its products for any particular purpose, nor does **onsemi** assume any liability arising out of the application or use of any product or circuit, and specifically disclaims any and all liability, including without limitation special, consequential or incidental damages. **onsemi** does not convey any license under its patent rights nor the rights of others.

PDIP6 8.51x6.35, 2.54P
CASE 646BZ
ISSUE O

DATE 31 JUL 2016

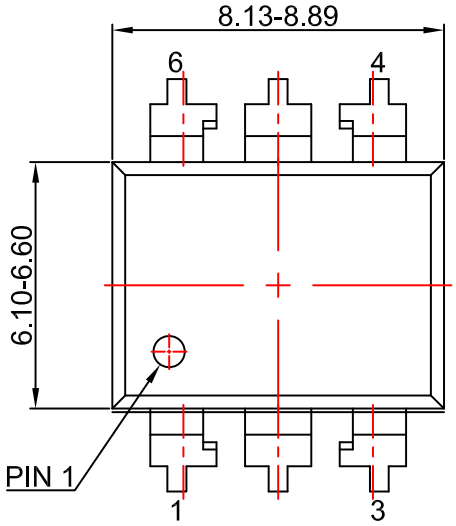

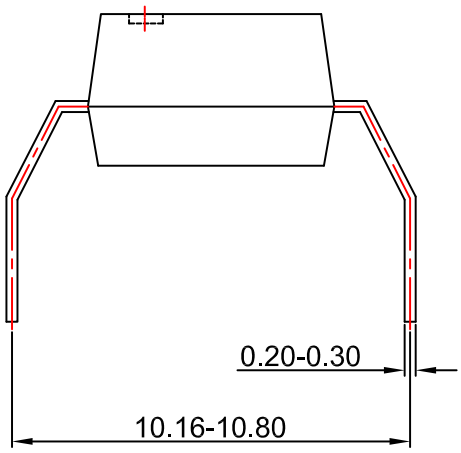

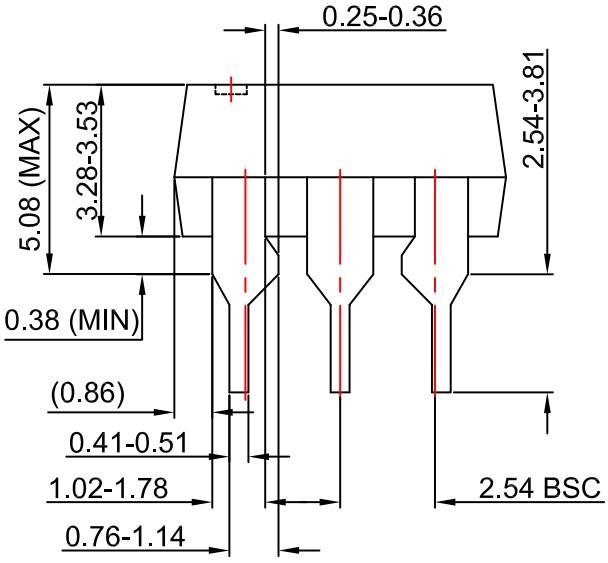

NOTES:

A) NO STANDARD APPLIES TO THIS PACKAGE.

B) ALL DIMENSIONS ARE IN MILLIMETERS.

C) DIMENSIONS ARE EXCLUSIVE OF BURRS, MOLD FLASH, AND TIE BAR EXTRUSION

DOCUMENT NUMBER:	**98AON13451G**	Electronic versions are uncontrolled except when accessed directly from the Document Repository. Printed versions are uncontrolled except when stamped "CONTROLLED COPY" in red.	
DESCRIPTION:	**PDIP6 8.51X6.35, 2.54P**		**PAGE 1 OF 1**

onsemi and onsemi are trademarks of Semiconductor Components Industries, LLC dba **onsemi** or its subsidiaries in the United States and/or other countries. **onsemi** reserves the right to make changes without further notice to any products herein. **onsemi** makes no warranty, representation or guarantee regarding the suitability of its products for any particular purpose, nor does **onsemi** assume any liability arising out of the application or use of any product or circuit, and specifically disclaims any and all liability, including without limitation special, consequential or incidental damages. **onsemi** does not convey any license under its patent rights nor the rights of others.

onsemi, onsemi, and other names, marks, and brands are registered and/or common law trademarks of Semiconductor Components Industries, LLC dba "**onsemi**" or its affiliates and/or subsidiaries in the United States and/or other countries. **onsemi** owns the rights to a number of patents, trademarks, copyrights, trade secrets, and other intellectual property. A listing of **onsemi**'s product/patent coverage may be accessed at www.onsemi.com/site/pdf/Patent−Marking.pdf. **onsemi** reserves the right to make changes at any time to any products or information herein, without notice. The information herein is provided "as−is" and **onsemi** makes no warranty, representation or guarantee regarding the accuracy of the information, product features, availability, functionality, or suitability of its products for any particular purpose, nor does **onsemi** assume any liability arising out of the application or use of any product or circuit, and specifically disclaims any and all liability, including without limitation special, consequential or incidental damages. Buyer is responsible for its products and applications using **onsemi** products, including compliance with all laws, regulations and safety requirements or standards, regardless of any support or applications information provided by **onsemi**. "Typical" parameters which may be provided in **onsemi** data sheets and/or specifications can and do vary in different applications and actual performance may vary over time. All operating parameters, including "Typicals" must be validated for each customer application by customer's technical experts. **onsemi** does not convey any license under any of its intellectual property rights nor the rights of others. **onsemi** products are not designed, intended, or authorized for use as a critical component in life support systems or any FDA Class 3 medical devices or medical devices with a same or similar classification in a foreign jurisdiction or any devices intended for implantation in the human body. Should Buyer purchase or use **onsemi** products for any such unintended or unauthorized application, Buyer shall indemnify and hold **onsemi** and its officers, employees, subsidiaries, affiliates, and distributors harmless against all claims, costs, damages, and expenses, and reasonable attorney fees arising out of, directly or indirectly, any claim of personal injury or death associated with such unintended or unauthorized use, even if such claim alleges that **onsemi** was negligent regarding the design or manufacture of the part. **onsemi** is an Equal Opportunity/Affirmative Action Employer. This literature is subject to all applicable copyright laws and is not for resale in any manner.

ADDITIONAL INFORMATION

TECHNICAL PUBLICATIONS:
Technical Library: www.onsemi.com/design/resources/technical−documentation
onsemi Website: www.onsemi.com

ONLINE SUPPORT: www.onsemi.com/support
For additional information, please contact your local Sales Representative at
www.onsemi.com/support/sales