PNP Epitaxial Silicon Transistor

KSA928A

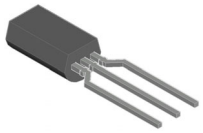

TO−92 3 LF
CASE 135AM

Features

- Audio Power Amplifier
- Complement to KSC2328A
- 3 W Output Application

ABSOLUTE MAXIMUM RATINGS

(Values are at T_A = 25°C unless otherwise noted.) (Notes 1, 2)

Symbol	Parameter	Value	Unit
V_{CBO}	Collector−Base Voltage	−30	V
V_{CEO}	Collector−Emitter Voltage	−30	V
V_{EBO}	Emitter−Base Voltage	−5	V
I_C	Collector Current	−2	A
T_J	Junction Temperature	150	°C
T_{STG}	Storage Temperature	−55 to +150	°C

Stresses exceeding those listed in the Maximum Ratings table may damage the device. If any of these limits are exceeded, device functionality should not be assumed, damage may occur and reliability may be affected.

1. These ratings are based on a maximum junction temperature of 150°C.
2. These are steady−state limits. **onsemi** should be consulted on applications involving pulsed or low−duty−cycle operations.

THERMAL CHARACTERISTICS

(Values are at T_A = 25°C unless otherwise noted.) (Note 3)

Symbol	Parameter	Value	Unit
P_D	Power Dissipation	1000	mW
	Derate Above 25°C	8.0	mW/°C
$R_{\theta JA}$	Thermal Resistance, Junction−to−Ambient	125	°C/W

3. PCB size: FR−4, 76 mm × 114 mm × 1.57 mm (3.0 inch × 4.5 inch × 0.062 inch) with minimum land pattern size.

MARKING DIAGRAM

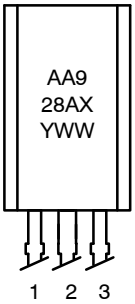

1: Emitter
2: Collector
3: Base

A = Assembly Code
A928A = Device Code
X = O / Y
YWW = Date Code

ORDERING INFORMATION

Device	Package	Shipping
KSA928AOTA	TO−92 3 LF (Pb−Free)	2000 / Fan−Fold
KSA928AYTA	TO−92 3 LF (Pb−Free)	2000 / Fan−Fold

© Semiconductor Components Industries, LLC, 2002

ELECTRICAL CHARACTERISTICS

(Values are at T_A = 25°C unless otherwise noted.)

Symbol	Parameter	Conditions	Min.	Typ.	Max.	Unit
BV_{CBO}	Collector−Base Breakdown Voltage	I_C = −100 μA, I_E = 0	−30	–	–	V
BV_{CEO}	Collector−Emitter Breakdown Voltage	I_C = −10 mA, I_B = 0	−30	–	–	V
BV_{EBO}	Emitter−Base Breakdown Voltage	I_E = −1 mA, I_C = 0	−5	–	–	V
I_{CBO}	Collector Cut−Off Current	V_{CB} = −30 V, I_E = 0	–	–	−100	nA
I_{EBO}	Emitter Cut−Off Current	V_{EB} = −5 V, I_C = 0	–	–	−100	nA
h_{FE}	DC Current Gain	V_{CE} = −2 V, I_C = −500 mA	100	–	320	
V_{BE}(on)	Base−Emitter On Voltage	V_{CE} = −2 V, I_C = −500 mA	–	–	−1.0	V
V_{CE}(sat)	Collector−Emitter Saturation Voltage	I_C = −1.5 A, I_B = −30 mA	–	–	−2.0	V
f_T	Current Gain Bandwidth Product	V_{CE} = −2 V, I_C = −500 mA	–	120	–	MHz
C_{ob}	Collector Output Capacitance	V_{CB} = −10 V, I_E = 0, f = 1 MHz	–	48	–	pF

Product parametric performance is indicated in the Electrical Characteristics for the listed test conditions, unless otherwise noted. Product performance may not be indicated by the Electrical Characteristics if operated under different conditions.

h_{FE} CLASSIFICATION

Classification	O	Y
h_{FE}	100 ~ 200	160 ~ 320

TYPICAL PERFORMANCE CHARACTERISTICS

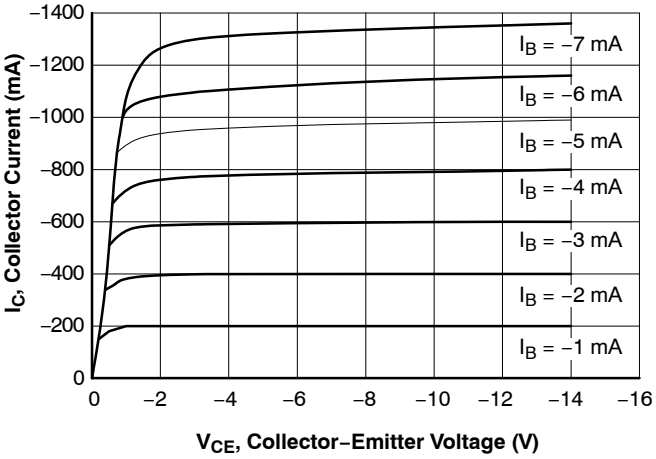

Figure 1. Static Characteristic

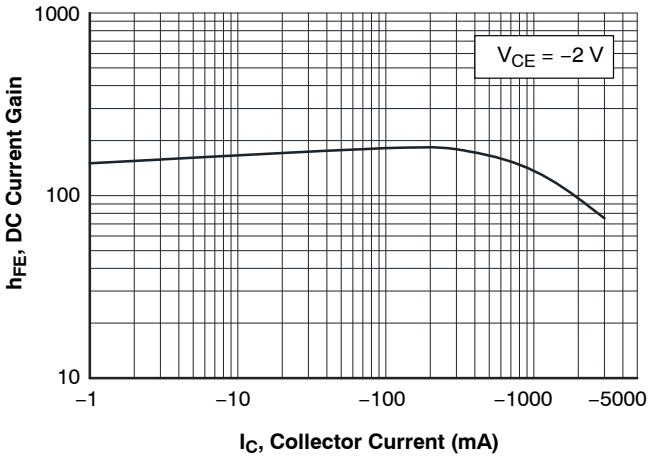

Figure 2. DC Current Gain

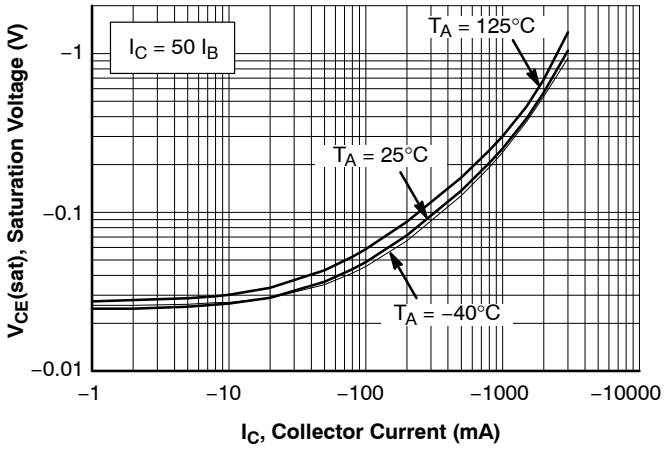

Figure 3. Collector−Emitter Saturation Voltage

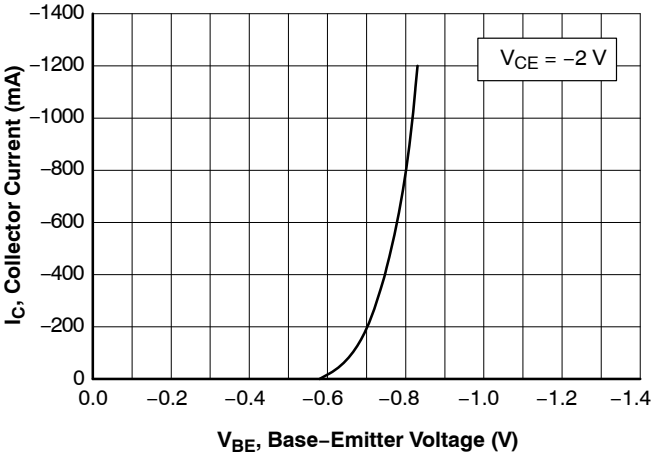

Figure 4. Base−Emitter On Voltage

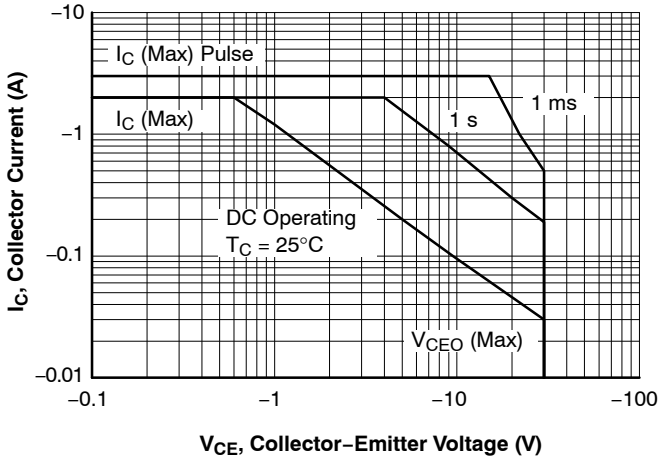

Figure 5. Safe Operating Area

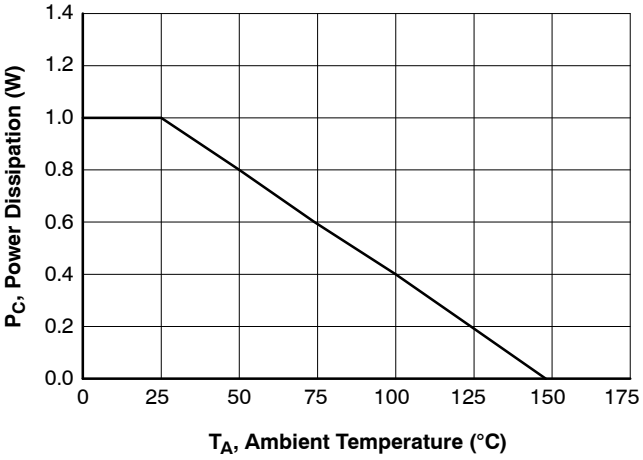

Figure 6. Power Derating

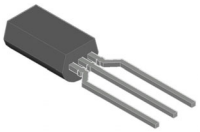

TO−92 3 8.0x4.9 (LEADFORMED)
CASE 135AM
ISSUE B

DATE 14 JAN 2021

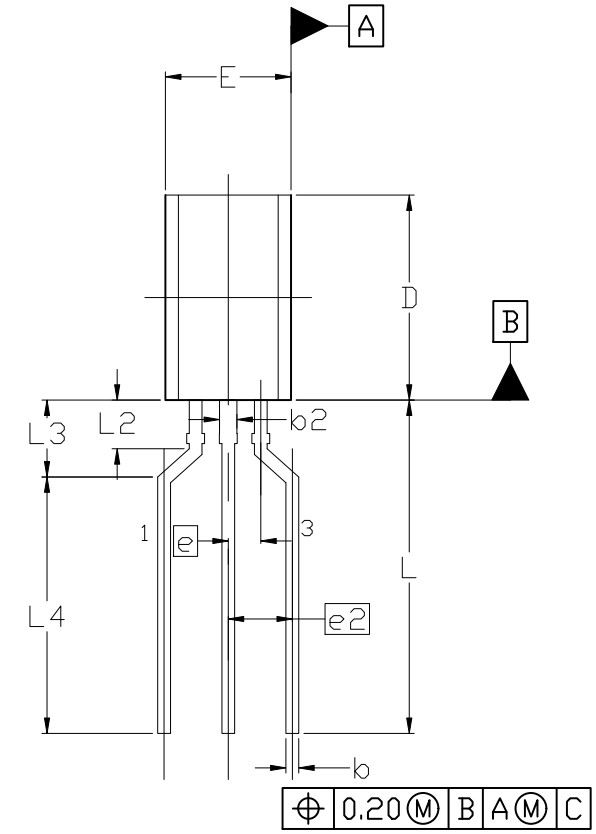

TOP VIEW

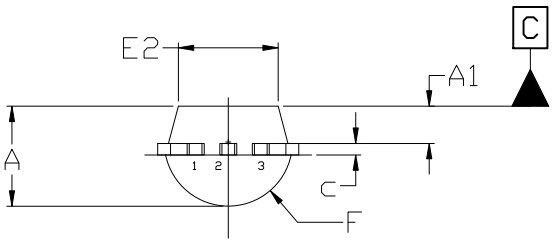

END VIEW

NOTES:
1. DIMENSIONING AND TOLERANCING PER ASME Y14.5M, 2009.
2. CONTROLLING DIMENSION: MILLIMETERS
3. DIMENSIONS ARE EXCLUSIVE OF BURRS, MOLD FLASH, GATE REMAINS AND TIE BAR PROTRUSIONS.
4. DIMENSION b AND b2 DOES NOT INCLUDE DAMBAR PROTRUSION. DIMENSION b2 LOCATED ABOVE THE DAMBAR PORTION OF MIDDLE LEAD.

	MILLIMETERS		
DIM	MIN.	NOM.	MAX.
A	3.70	3.90	4.10
A1	1.25	1.45	1.65
b	0.35	0.50	0.60
b2	0.62	---	0.78
c	0.35	0.45	0.55
D	7.80	8.00	8.20
E	4.70	4.90	5.10
E2	3.70	3.90	4.10
e	1.27 BSC		
e2	2.50 BSC		
F	2.45 REF		
L	13.00 REF		
L2	1.50	---	1.90
L3	2.60	---	3.40
L4	10.40 REF		

DOCUMENT NUMBER:	**98AON14058G**	Electronic versions are uncontrolled except when accessed directly from the Document Repository. Printed versions are uncontrolled except when stamped "CONTROLLED COPY" in red.
DESCRIPTION:	**TO−92 3 8.0X4.9 (LEADFORMED)**	**PAGE 1 OF 1**

onsemi and onsemi are trademarks of Semiconductor Components Industries, LLC dba **onsemi** or its subsidiaries in the United States and/or other countries. **onsemi** reserves the right to make changes without further notice to any products herein. **onsemi** makes no warranty, representation or guarantee regarding the suitability of its products for any particular purpose, nor does **onsemi** assume any liability arising out of the application or use of any product or circuit, and specifically disclaims any and all liability, including without limitation special, consequential or incidental damages. **onsemi** does not convey any license under its patent rights nor the rights of others.

onsemi, onsemi, and other names, marks, and brands are registered and/or common law trademarks of Semiconductor Components Industries, LLC dba "**onsemi**" or its affiliates and/or subsidiaries in the United States and/or other countries. **onsemi** owns the rights to a number of patents, trademarks, copyrights, trade secrets, and other intellectual property. A listing of **onsemi**'s product/patent coverage may be accessed at www.onsemi.com/site/pdf/Patent−Marking.pdf. **onsemi** reserves the right to make changes at any time to any products or information herein, without notice. The information herein is provided "as−is" and **onsemi** makes no warranty, representation or guarantee regarding the accuracy of the information, product features, availability, functionality, or suitability of its products for any particular purpose, nor does **onsemi** assume any liability arising out of the application or use of any product or circuit, and specifically disclaims any and all liability, including without limitation special, consequential or incidental damages. Buyer is responsible for its products and applications using **onsemi** products, including compliance with all laws, regulations and safety requirements or standards, regardless of any support or applications information provided by **onsemi**. "Typical" parameters which may be provided in **onsemi** data sheets and/or specifications can and do vary in different applications and actual performance may vary over time. All operating parameters, including "Typicals" must be validated for each customer application by customer's technical experts. **onsemi** does not convey any license under any of its intellectual property rights nor the rights of others. **onsemi** products are not designed, intended, or authorized for use as a critical component in life support systems or any FDA Class 3 medical devices or medical devices with a same or similar classification in a foreign jurisdiction or any devices intended for implantation in the human body. Should Buyer purchase or use **onsemi** products for any such unintended or unauthorized application, Buyer shall indemnify and hold **onsemi** and its officers, employees, subsidiaries, affiliates, and distributors harmless against all claims, costs, damages, and expenses, and reasonable attorney fees arising out of, directly or indirectly, any claim of personal injury or death associated with such unintended or unauthorized use, even if such claim alleges that **onsemi** was negligent regarding the design or manufacture of the part. **onsemi** is an Equal Opportunity/Affirmative Action Employer. This literature is subject to all applicable copyright laws and is not for resale in any manner.

ADDITIONAL INFORMATION

TECHNICAL PUBLICATIONS:
Technical Library: www.onsemi.com/design/resources/technical−documentation
onsemi Website: www.onsemi.com

ONLINE SUPPORT: www.onsemi.com/support
For additional information, please contact your local Sales Representative at
www.onsemi.com/support/sales