The Future of Analog IC Technology®

MP2308

18V, 4A Synchronous Step-Down Coverter

DESCRIPTION

The MP2308 is a synchronous rectified step-down switch mode converter with built in internal power MOSFETs. It offers a very compact solution to achieve 4A continuous output current over a wide input supply range with excellent load and line regulation. The MP2308 has synchronous mode operation for higher efficiency over output current load range.

Current mode operation provides fast transient response and eases loop stabilization. Full protection features include OCP and thermal shut down.

The MP2308 requires a minimum number of readily available standard external components and is available in a space saving 2mm x 3mm 14-pin QFN package.

FEATURES

- Wide 4.75V to 18V Operating Input Range
- 4A Output Current
- Low Rds(ON) Internal Power MOSFETs
- 300kHz-2MHz Programmable Switching Frequency
- EN ON/OFF Control
- Light Load Mode Selectable
- External Soft Start
- OCP and Thermal Shutdown
- Available in 14-pin QFN2x3 Package

APPLICATIONS

- DSL Modems
- Cable Modems
- Set Top Boxes

All MPS parts are lead-free and adhere to the RoHS directive. For MPS green status, please visit MPS website under Products, Quality Assurance page.

"MPS" and "The Future of Analog IC Technology" are registered trademarks of Monolithic Power Systems, Inc.

TYPICAL APPLICATION

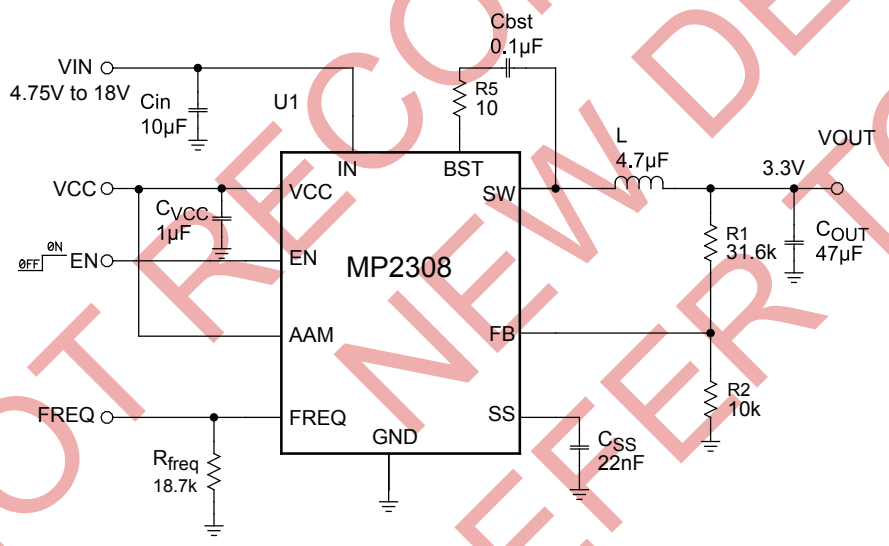

Efficiency vs. Output Current

F_s=500kHz

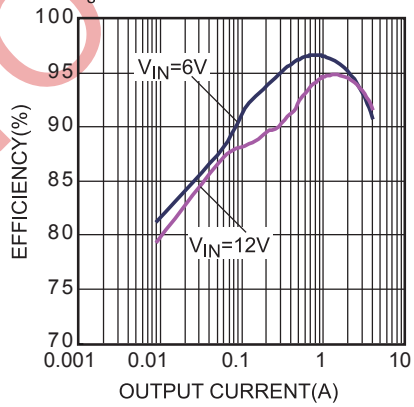

NOT RECOMMENDED FOR NEW DESIGNS REFER TO MP1499

MPS Proprietary Information. Patent Protected. Unauthorized Photocopy and Duplication Prohibited.
© 2020 MPS. All Rights Reserved.

ORDERING INFORMATION

Part Number	Package	Top Marking
MP2308GD*	QFN14 (2x3mm)	AEE

* For Tape & Reel, add suffix –Z (eg. MP2308GD–Z);

PACKAGE REFERENCE

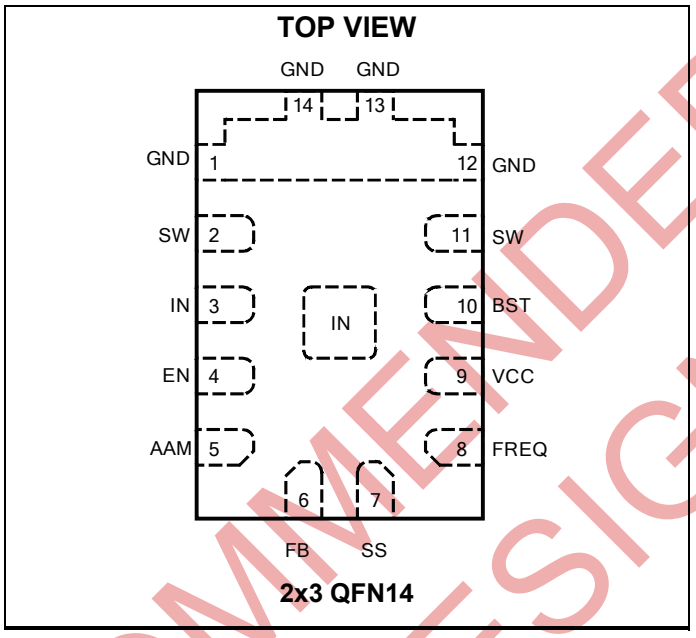

ABSOLUTE MAXIMUM RATINGS (1)

V_{IN} ..... -0.3V to 21V
V_{SW} ..... -0.3V to 22V
V_{BST} ..... V_{SW} + 6V
All Other Pins ..... -0.3V to 6.5 V
Junction Temperature ..... 150°C
Lead Temperature ..... 260°C
Continuous Power Dissipation (T_A = +25°C) (2)
2x3 QFN14 ..... 1.8W
Junction Temperature ..... 150°C
Operating Temperature ..... -40°C to +85°C

Recommended Operating Conditions (3)

Supply Voltage V_{IN} ..... 4.75V to 18V
Output Voltage V_{OUT} ..... 0.815V - V_{IN}x90%
Operating Junction Temp. (T_J). -40°C to +125°C

Thermal Resistance (4) θ_{JA} θ_{JC}

QFN14 (2x3mm) ..... 70 ..... 15 ... °C/W

Notes:

1) Exceeding these ratings may damage the device.
2) The maximum allowable power dissipation is a function of the maximum junction temperature T_J (MAX), the junction-to-ambient thermal resistance θ_{JA}, and the ambient temperature T_A. The maximum allowable continuous power dissipation at any ambient temperature is calculated by P_D (MAX) = (T_J (MAX)-T_A)/θ_{JA}. Exceeding the maximum allowable power dissipation will cause excessive die temperature, and the regulator will go into thermal shutdown. Internal thermal shutdown circuitry protects the device from permanent damage.
3) The device is not guaranteed to function outside of its operating conditions.
4) Measured on JESD51-7, 4-layer PCB.

NOT RECOMMENDED FOR NEW DESIGNS REFER TO MP1499

MPS Proprietary Information. Patent Protected. Unauthorized Photocopy and Duplication Prohibited.
© 2020 MPS. All Rights Reserved.

ELECTRICAL CHARACTERISTICS

V_{IN} = 12V, T_A = 25°C, unless otherwise noted.

Parameters	Symbol	Condition	Min	Typ	Max	Units
Supply Current (Shutdown)	I_{IN}	V_{EN} = 0V		10		μA
Supply Current (Quiescent)	I_{IN}	V_{EN} = 2V, V_{FB} = 1V		1		mA
HS Switch-On Resistance	HS_{RDS-ON}			60		mΩ
LS Switch-On Resistance	LS_{RDS-ON}			30		mΩ
Switch Leakage	SW_{LKG}	V_{EN} = 0V, V_{SW} = 0V or 12V		0	10	μA
Current Limit	I_{LIMIT}	Duty=40%		5.6		A
Oscillator Frequency	f_{SW}	R_{SET}=30k	400	500	600	kHz
Maximum Duty Cycle	D_{MAX}	V_{FB} = 700mV	90	95		%
Feedback Voltage	V_{FB}		800	815	830	mV
Feedback Current	I_{FB}	V_{FB} = 800mV		25	50	nA
EN Input Low Voltage	VIL_{EN}		0.98	1.12	1.32	V
EN Input High Voltage	VIH_{EN}		1.32	1.50	1.78	V
EN Pin Pull-Up Current	I_{EN}		1.2	2.3	3.5	μA
V_{IN} Under-Voltage Lockout Threshold Rising	$INUV_{Vth}$		4.0	4.25	4.5	V
V_{IN} Under-Voltage Lockout Threshold Hysteresis	$INUV_{HYS}$			870		mV
VCC Regulator	V_{CC}			5		V
VCC Load Regulation		I_{CC}=5mA		1		%
Thermal Shutdown	T_{SD}			150		°C
Soft Start Current	I_{SS}			8		μA
Thermal Shutdown Hysteresis	T_{SD-HYS}			30		°C

NOT RECOMMENDED FOR NEW DESIGNS REFER TO MP1499

MPS Proprietary Information. Patent Protected. Unauthorized Photocopy and Duplication Prohibited.
© 2020 MPS. All Rights Reserved.

PIN FUNCTIONS

QFN 2X3mm Pin #	Name	Description
1, 12, 13, 14	GND	Ground. Connect these pins with larger copper areas to the negative terminals of the input and output capacitors. Connect exposed pad to GND plane for proper thermal performance.
2, 11	SW	Switch Output. Use wide PCB traces and multiple vias to make the connection.
3, Center Pad	IN	Supply Voltage. The MP2308 operates from a +4.75V to +18V input rail. Cin is needed to decouple the input rail. Use wide PCB traces and multiple vias to make the connection.
4	EN	EN=1 to enable the MP2308. And EN=0 disables the MP2308.
5	AAM	Advanced Asynchronous Modulation Input. An active-high signal enables low-power mode operation. Connect AAM pin to GND to disable it and make the converter always operate in CCM (Continuous Current Mode).
6	FB	Feedback. An external resistor divider from the output to GND, tapped to the FB pin, sets the output voltage. To prevent current limit run away during a short circuit fault condition the frequency fold-back comparator lowers the oscillator frequency when the FB voltage is below 100mV.
7	SS	Soft Start. Connect an external capacitor to program the soft start time for the switch mode regulator.
8	FREQ	Switching Frequency Program Input. Connect a resistor from this pin to ground to set the switching frequency.
9	VCC	Bias Supply. Decouple with 1μF capacitor.
10	BST	Bootstrap. A capacitor connected between SW and BST pins is required to form a floating supply across the high-side switch driver.

NOT RECOMMENDED FOR NEW DESIGNS REFER TO MP1499

MPS Proprietary Information. Patent Protected. Unauthorized Photocopy and Duplication Prohibited.
© 2020 MPS. All Rights Reserved.

TYPICAL PERFORMANCE CHARACTERISTICS

V_{IN} = 12V, V_{OUT} = 3.3V, L = 4.7μH, fs=500kHz, T_A = +25ºC, unless otherwise noted.

Efficiency vs. Output Current

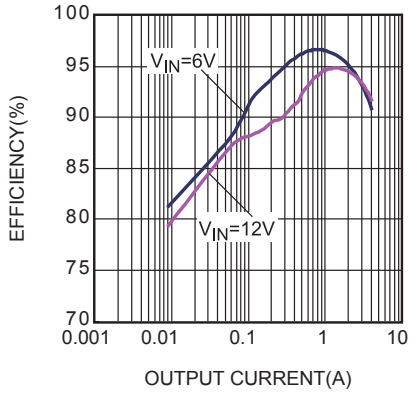

Load Regulation

V_{IN}=6-18V, I_{OUT}=0-4A

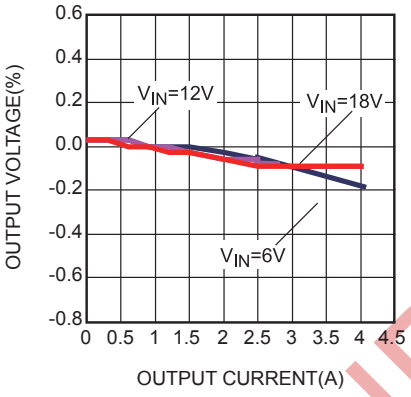

Line Regulation

V_{IN}=6-18V

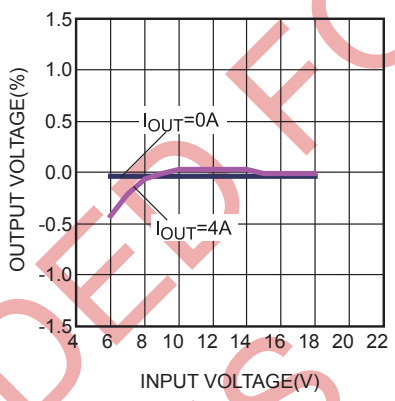

Peak Current vs. Duty Cycle

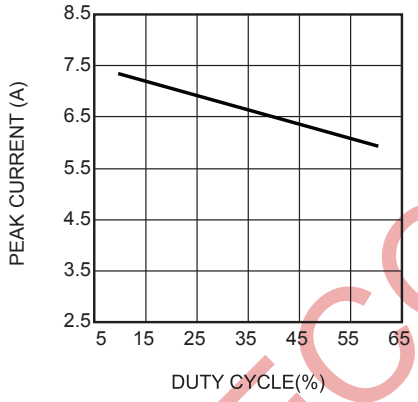

Disabled Supply Current vs. Input Voltage

V_{IN}=6-18V, I_{OUT}=0A

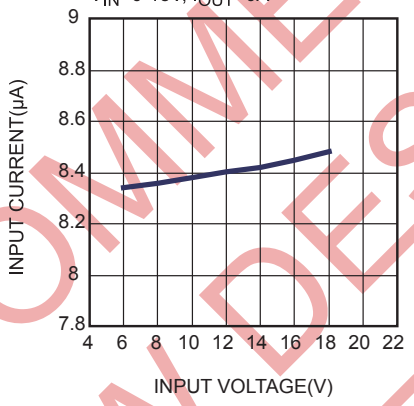

Enabled Supply Current vs. Input Voltage

V_{IN}=6-18V, I_{OUT}=0A

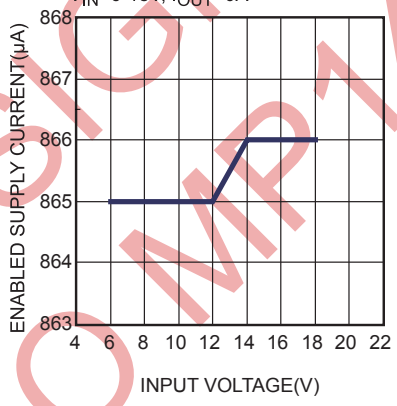

Case Temperature Rise vs. Output Current

I_{OUT}=0-4A

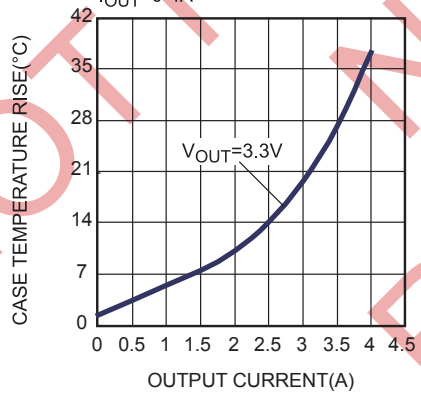

Inductor Peak Current vs. AAM Voltage

I_{OUT}=0A

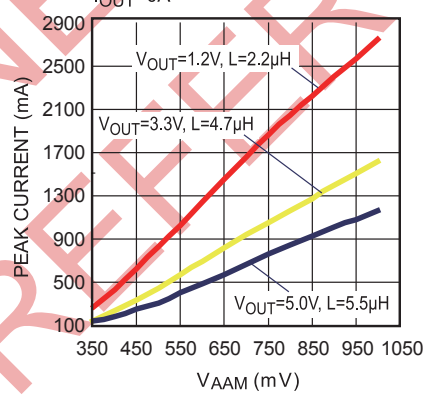

Typical V_{FB} vs. Temperature

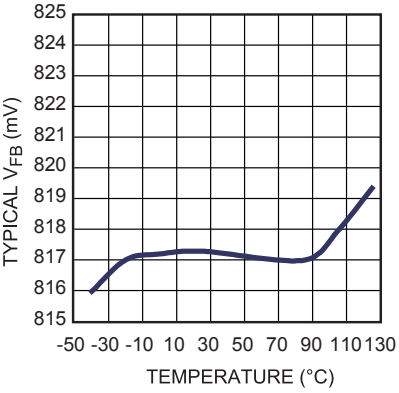

NOT RECOMMENDED FOR NEW DESIGN
REFER TO MP1499

MPS Proprietary Information. Patent Protected. Unauthorized Photocopy and Duplication Prohibited.
© 2020 MPS. All Rights Reserved.

TYPICAL PERFORMANCE CHARACTERISTICS *(continued)*

V_{IN} = 12V, V_{OUT} = 3.3V, L = 4.7μH, fs=500kHz, T_A = +25ºC, unless otherwise noted.

Input/Output Voltage Ripple
I_{OUT} = 4A

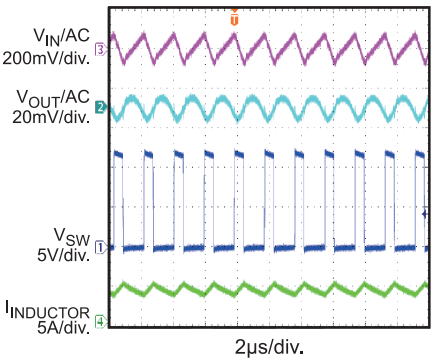

Power up
I_{OUT} = 0A

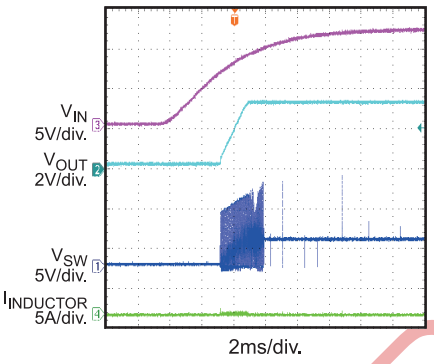

Power down
I_{OUT} = 0A

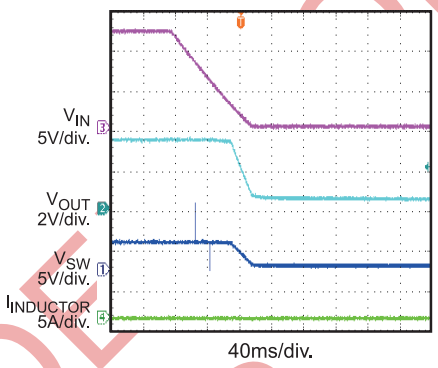

Power up
I_{OUT} = 4A

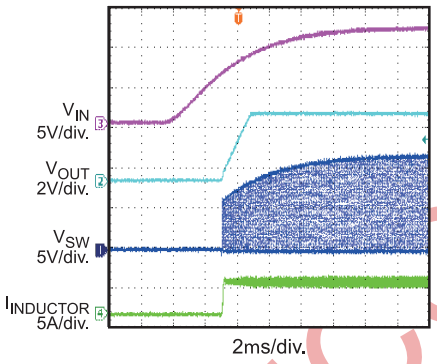

Power down
I_{OUT} = 0A

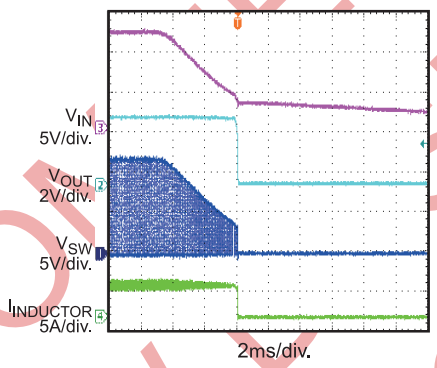

Enable start up
I_{OUT} = 0A

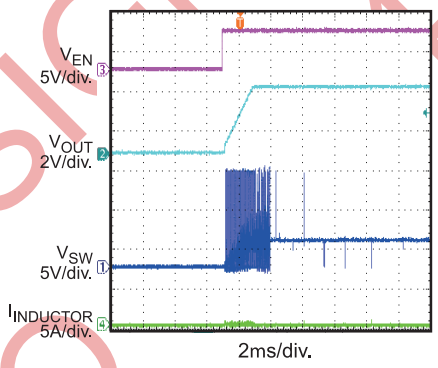

Enable shutdown
I_{OUT} = 0A

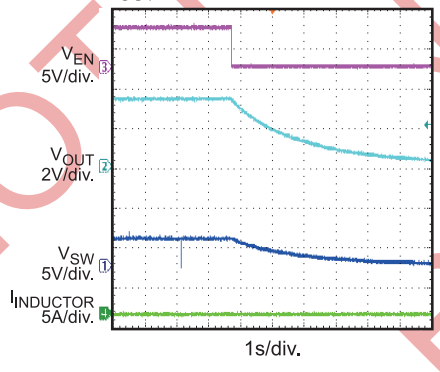

Enable start up
I_{OUT} = 4A

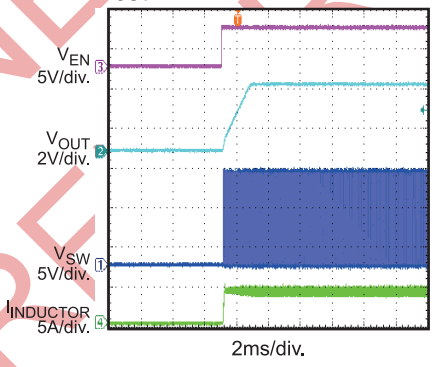

Enable shutdown
I_{OUT} = 4A

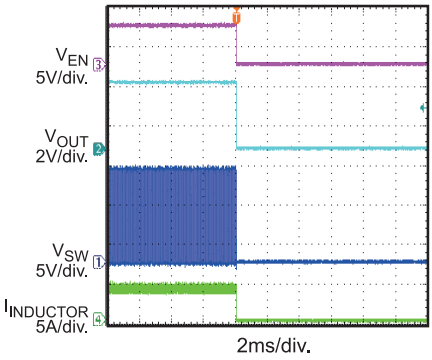

NOT RECOMMENDED FOR NEW DESIGNS REFER TO 499

MPS Proprietary Information. Patent Protected. Unauthorized Photocopy and Duplication Prohibited.
© 2020 MPS. All Rights Reserved.

TYPICAL PERFORMANCE CHARACTERISTICS *(continued)*

V_{IN} = 12V, V_{OUT} = 3.3V, L = 4.7μH, fs=500kHz, T_A = +25ºC, unless otherwise noted.

Transient Response
I_{OUT} = 2A-3A , 1A/μs

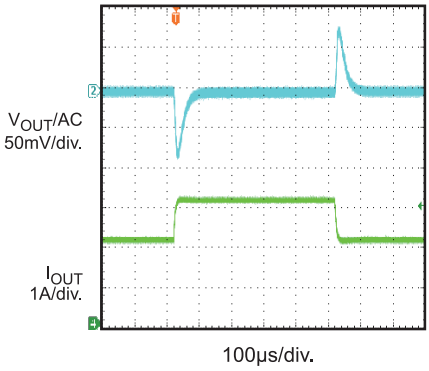

Short Circuit Entry
I_{OUT} = 0A

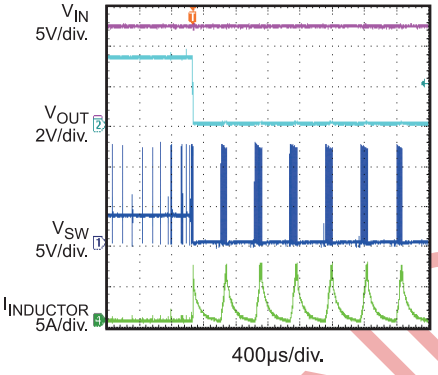

Short Circuit Recovery
I_{OUT} = 0A

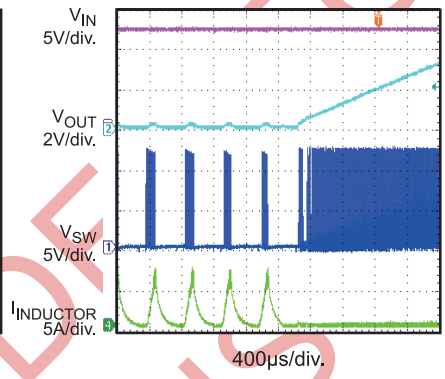

NOT RECOMMENDED FOR NEW DESIGNS REFER TO MP1499

MPS Proprietary Information. Patent Protected. Unauthorized Photocopy and Duplication Prohibited.
© 2020 MPS. All Rights Reserved.

FUNCTION BLOCK DIAGRAM

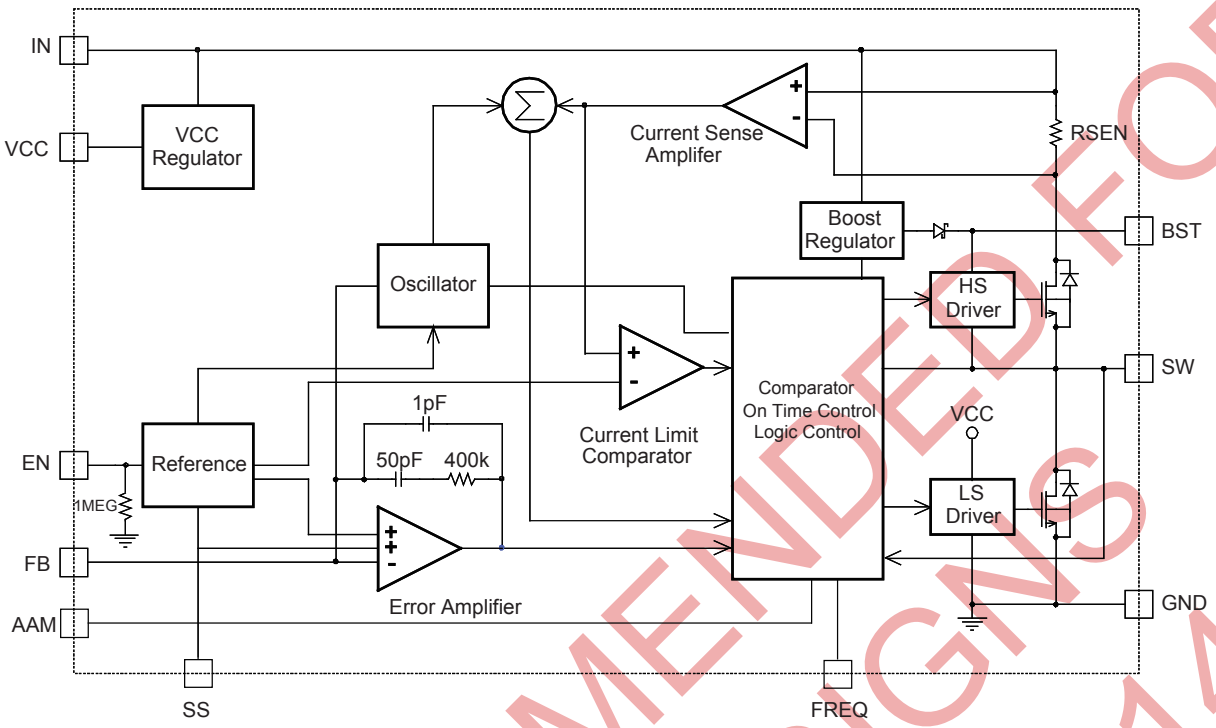

Figure 1—Block Function Diagram

NOT RECOMMENDED FOR NEW DESIGNS REFER TO MP1499

MPS Proprietary Information. Patent Protected. Unauthorized Photocopy and Duplication Prohibited.
© 2020 MPS. All Rights Reserved.

OPERATION

The MP2308 is a high frequency synchronous rectified step-down switch mode converter with built in internal power MOSFETs. It offers a very compact solution to achieve more than 4A continuous output current over a wide input supply range with excellent load and line regulation.

The MP2308 operates in a fixed frequency, peak current control mode to regulate the output voltage. A PWM cycle is initiated by the internal clock. The integrated high-side power MOSFET is turned on and remains on until its current reaches the value set by the COMP voltage. When the power switch is off, it remains off until the next clock cycle starts. If, in 90% of one PWM period, the current in the power MOSFET does not reach the COMP set current value, the power MOSFET will be forced to turn off.

Error Amplifier

The error amplifier compares the FB pin voltage with the internal 0.8V reference (REF) and outputs a current proportional to the difference between the two. This output current is then used to charge or discharge the internal compensation network to form the COMP voltage, which is used to control the power MOSFET current. The optimized internal compensation network minimizes the external component counts and simplifies the control loop design.

Internal Regulator

Most of the internal circuitries are powered from the 5V internal regulator. This regulator takes the VIN input and operates in the full VIN range. When VIN is greater than 5.0V, the output of the regulator is in full regulation. When VIN is lower than 5.0V, the output decreases, a 1μF ceramic capacitor for decoupling purpose is required.

Enable Control

The MP2308 has a dedicated enable control pin (EN): pulling it high enables the IC, pulling it low disables it. Tie EN to VIN through a resistor for automatic start up. EN must be pulled low to disable the part.

The EN pin is clamped internally using a 6.7V series-Zener-diode as shown in Figure 2. Connect the EN input pin through a pullup resistor to any voltage connected to the VIN pin such that the pullup resistor limits the EN input current to less than 100μA.

For example, connecting 12V to VIN, $R_{PULLUP} \geq (12V - 6.7V)/100\mu A = 53k\Omega$.

Connecting the EN pin is directly to a voltage source without any pullup resistor requires limiting the amplitude of the voltage source to below 6V to prevent damage to the Zener diode.

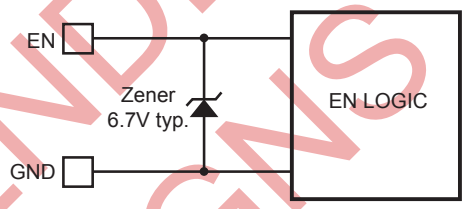

Figure 2: Zener Diode between EN and GND

The EN pin also features an internal 2.3μA current source. Connect a capacitor to the EN pin for delayed startup. When VIN exceeds the input UVLO, an internal 2.3μA current source charges the external capacitor. The external capacitor connects to the non-inverting input of a comparator. The part is enabled once the capacitor voltage exceeds the 1.5V internal reference voltage.

External Soft-Start

The soft start time can be adjusted by connecting a capacitor from this pin to ground. When the soft-start period starts, an internal 8μA current source begins charging the external capacitor. During soft-start, the voltage on the soft-start capacitor is connected to the non-inverting input of the error amplifier. The soft-start period lasts until the voltage on the soft-start capacitor exceeds the reference voltage of 0.815V. At this point the reference voltage takes over at the no inverting error amplifier input. The soft-start time can be calculated as follows:

$$t_{SS}(ms) = \frac{0.815V \times C_{SS}(nF)}{8\mu A}$$

NOT RECOMMENDED FOR NEW DESIGNS REFER TO MP1499

MPS Proprietary Information. Patent Protected. Unauthorized Photocopy and Duplication Prohibited.
© 2020 MPS. All Rights Reserved.

If the output of the MP2308 is pre-biased to a certain voltage during startup, the IC will disable the switching of both high-side and low-side switches until the voltage on the internal soft-start capacitor exceeds the sensed output voltage at the FB pin.

Over-Current-Protection

The MP2308 has a hiccup over current limit when the inductor current peak value exceeds the set current limit threshold.

When output voltage drops below 70% of the reference, and the inductor current exceeds the current limit at the meantime, MP2308 will hiccup. This is especially useful to ensure system safety under fault conditions.

Light Load Mode

The MP2308 can operate in discontinuous mode (DCM) and Pulse skip mode (PSM) under light load to improve efficiency. To enable Light Load Mode, connect AAM pin to VCC pin or to a voltage divider from VCC. To disable Light Load Mode, connect AAM pin to ground and the converter will always operate in CCM.

When the AAM pin connects to VCC, the inductor peak current in set internally which is about 240mA for VIN=12V, VOUT=3.3V and L=4.7μH. Peak inductor current also can be set by connecting AAM pin to a voltage divider from VCC with 2 external resistors. By program AAM voltage, efficiency and output ripple can be traded off and optimize. Higher AAM gives higher peak inductor current thus more efficient but more output ripple. To help select the AAM voltage, the curve of inductor peak current vs. low power mode voltage is shown in Page 5, Typical Performance Characteristics section.

Under-Voltage Lockout (UVLO)

Under-voltage lockout (UVLO) protects the chip from operating at insufficient supply voltage. The MP2308's UVLO comparator monitors the output voltage of the internal regulator, VCC.

The UVLO rising threshold is 4.25V while its falling threshold is 3.38V.

Thermal Shutdown

Thermal shutdown is implemented to prevent the chip from operating at exceedingly high temperatures. When the silicon die temperature is higher than 150°C, it shuts down the whole chip. When the temperature is lower than its lower threshold, typically 140°C, the chip is enabled again.

Floating Driver and Bootstrap Charging

The floating power MOSFET driver is powered by an external bootstrap capacitor. This floating driver has its own UVLO protection. This UVLO's rising threshold is 2.2V with a hysteresis of 150mV. The bootstrap capacitor voltage is regulated internally by VIN through D1, M1, C4, L1 and C2 (Figure 3). If (V_{IN}-V_{SW}) is more than 5V, U1 will regulate M1 to maintain a 5V BST voltage across C4.

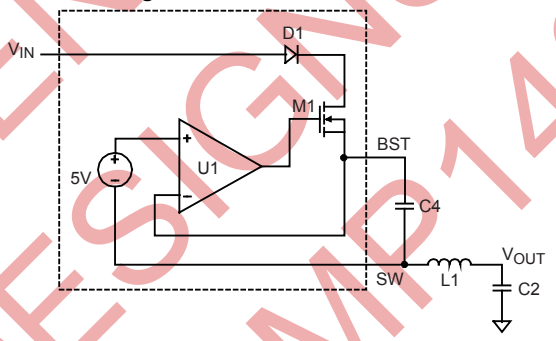

Figure 3—Internal Bootstrap Charging Circuit

Startup and Shutdown

If both V_{IN} and EN are higher than their appropriate thresholds, the chip starts. The reference block starts first, generating stable reference voltage and currents, and then the internal regulator is enabled. The regulator provides stable supply for the remaining circuitries.

Three events can shut down the chip: EN low, V_{IN} low and thermal shutdown. In the shutdown procedure, the signaling path is first blocked to avoid any fault triggering. The COMP voltage and the internal supply rail are then pulled down. The floating driver is not subject to this shutdown command.

NOT RECOMMENDED FOR NEW DESIGNS REFER TO MP1499

MPS Proprietary Information. Patent Protected. Unauthorized Photocopy and Duplication Prohibited.
© 2020 MPS. All Rights Reserved.

APPLICATION INFORMATION

COMPONENT SELECTION

Setting the Output Voltage

The external resistor divider is used to set the output voltage (see Typical Application on page 1). The feedback resistor R1 also sets the feedback loop bandwidth with the internal compensation capacitor (see Typical Application on page 1). Choose R1 to be around 10kΩ. R2 is then given by:

$$R2 = \frac{R1}{\frac{V_{OUT}}{0.8V} - 1}$$

The T-type network is highly recommended when V_{OUT} is low, as Figure 4 shows.

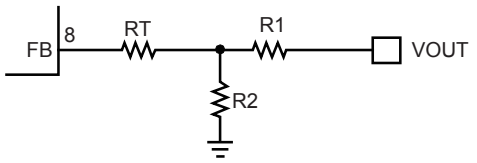

Figure 4— T-type Network

Table 1 lists the recommended T-type resistors value for common output voltages.

Table 1—Resistor Selection for Common Output Voltages

V_{OUT} (V)	R1 (kΩ)	R2 (kΩ)	Rt (kΩ)
1.05	3.09(1%)	10(1%)	24.9(1%)
1.2	4.99(1%)	10(1%)	24.9(1%)
1.8	10(1%)	8.06(1%)	24.9(1%)
2.5	10(1%)	4.75(1%)	24.9(1%)
3.3	10(1%)	3.16(1%)	24.9(1%)
5	10(1%)	1.91(1%)	24.9(1%)

Selecting the Inductor

A 1μH to 10μH inductor with a DC current rating of at least 25% percent higher than the maximum load current is recommended for most applications. For highest efficiency, the inductor DC resistance should be less than 15mΩ. For most designs, the inductance value can be derived from the following equation.

$$L_1 = \frac{V_{OUT} \times (V_{IN} - V_{OUT})}{V_{IN} \times \Delta I_L \times f_{OSC}}$$

Where ΔI_L is the inductor ripple current.

Choose the inductor current to be approximately 30% of the maximum load current. The maximum inductor peak current is:

$$I_{L(MAX)} = I_{LOAD} + \frac{\Delta I_L}{2}$$

Under light load conditions below 100mA, larger inductance is recommended for improved efficiency.

Setting the Switching Frequency

The MP2308 oscillating frequency is set by an external resistor, Rfreq from the FREQ pin to ground. The programmable switching frequency range is from 300kHz to 2MHz. The value of Rfreq can be calculated from:

$$R_{freq}(k\Omega) = \frac{15000}{f_s(kHz)}$$

Selecting the Input Capacitor

The input current to the step-down converter is discontinuous, therefore a capacitor is required to supply the AC current to the step-down converter while maintaining the DC input voltage. Use low ESR capacitors for the best performance. Ceramic capacitors with X5R or X7R dielectrics are highly recommended because of their low ESR and small temperature coefficients. For most applications, a 22μF capacitor is sufficient.

Since the input capacitor (C1) absorbs the input switching current it requires an adequate ripple current rating. The RMS current in the input capacitor can be estimated by:

$$I_{C1} = I_{LOAD} \times \sqrt{\frac{V_{OUT}}{V_{IN}} \times \left(1 - \frac{V_{OUT}}{V_{IN}}\right)}$$

The worst case condition occurs at $V_{IN} = 2V_{OUT}$, where:

$$I_{C1} = \frac{I_{LOAD}}{2}$$

To simplify, choose the input capacitor whose RMS current rating is greater than half of the maximum load current.

NOT RECOMMENDED FOR NEW DESIGNS REFER TO MP1499

MPS Proprietary Information. Patent Protected. Unauthorized Photocopy and Duplication Prohibited.
© 2020 MPS. All Rights Reserved.

The input capacitor can be electrolytic, tantalum or ceramic. When using electrolytic or tantalum capacitors, a small, high quality ceramic capacitor, i.e. 0.1μF, should be placed as close to the IC as possible. When using ceramic capacitors, make sure that they have enough capacitance to provide sufficient charge to prevent excessive voltage ripple at input. The input voltage ripple caused by capacitance can be estimated by:

$$\Delta V_{IN} = \frac{I_{LOAD}}{f_S \times C1} \times \frac{V_{OUT}}{V_{IN}} \times \left(1 - \frac{V_{OUT}}{V_{IN}}\right)$$

Selecting the Output Capacitor

The output capacitor (C2) is required to maintain the DC output voltage. Ceramic, tantalum, or low ESR electrolytic capacitors are recommended. Low ESR capacitors are preferred to keep the output voltage ripple low. The output voltage ripple can be estimated by:

$$\Delta V_{OUT} = \frac{V_{OUT}}{f_S \times L_1} \times \left(1 - \frac{V_{OUT}}{V_{IN}}\right) \times \left(R_{ESR} + \frac{1}{8 \times f_S \times C2}\right)$$

Where L_1 is the inductor value and RESR is the equivalent series resistance (ESR) value of the output capacitor.

In the case of ceramic capacitors, the impedance at the switching frequency is dominated by the capacitance. The output voltage ripple is mainly caused by the capacitance. For simplification, the output voltage ripple can be estimated by:

$$\Delta V_{OUT} = \frac{V_{OUT}}{8 \times f_S^2 \times L_1 \times C2} \times \left(1 - \frac{V_{OUT}}{V_{IN}}\right)$$

In the case of tantalum or electrolytic capacitors, the ESR dominates the impedance at the switching frequency. For simplification, the output ripple can be approximated to:

$$\Delta V_{OUT} = \frac{V_{OUT}}{f_S \times L_1} \times \left(1 - \frac{V_{OUT}}{V_{IN}}\right) \times R_{ESR}$$

The characteristics of the output capacitor also affect the stability of the regulation system. The MP2308 can be optimized for a wide range of capacitance and ESR values.

External Bootstrap Diode

An external bootstrap diode may enhance the efficiency of the regulator, the applicable conditions of external BST diode are:

- V_{OUT} is 5V or 3.3V; and
- Duty cycle is high: $D = \frac{V_{OUT}}{V_{IN}} > 65\%$

In these cases, an external BST diode is recommended from the VCC pin to BST pin, as shown in Figure 5.

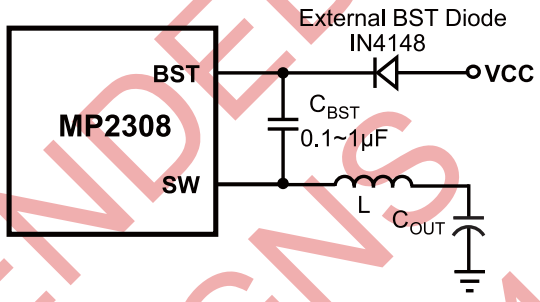

Figure 5—Add Optional External Bootstrap Diode to Enhance Efficiency

The recommended external BST diode is IN4148, and the BST cap is 0.1~1μF.

PC Board Layout

This PCB board layout is referring to the schematic in Figure 6.

Place the high-current paths (GND, IN and SW) very close to the device with short, direct and wide traces. The input decoupling capacitor needs to be placed as close as possible to the IN and GND pins. The VCC decoupling capacitor needs to be placed as close as possible to the VCC pin and multiple VIAs should be used on both the ground side of the VCC decoupling capacitor and the GND pins to connect to the inner and bottom ground plane. Place the external feedback resistors next to the FB pin. Keep the switching node SW short and away from the feedback network.

NOT RECOMMENDED FOR NEW DESIGNS REFER TO MP1499

MPS Proprietary Information. Patent Protected. Unauthorized Photocopy and Duplication Prohibited.
© 2020 MPS. All Rights Reserved.

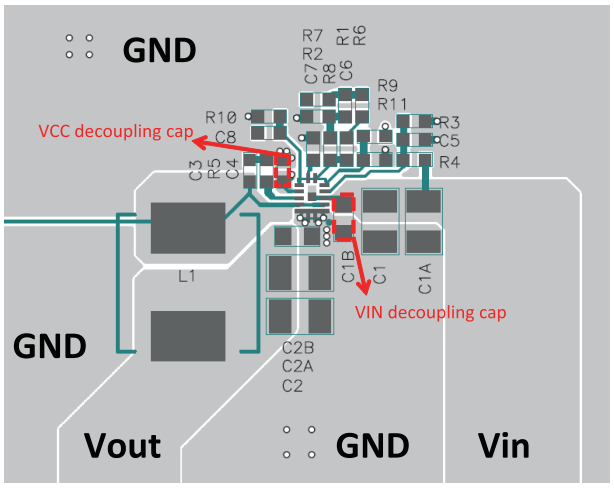

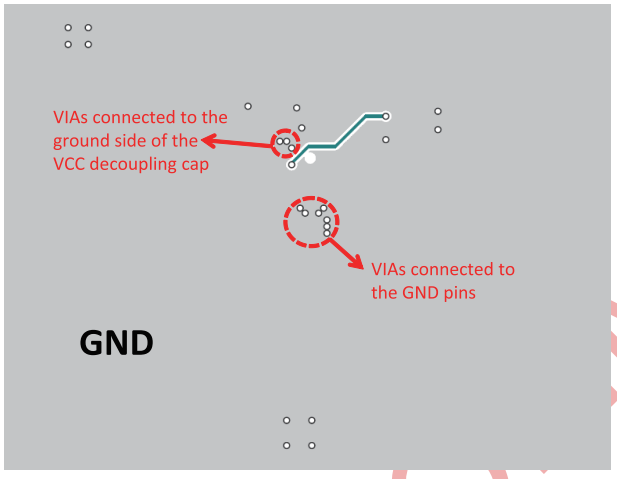

NOT RECOMMENDED FOR NEW DESIGNS REFER TO MP1499

MPS Proprietary Information. Patent Protected. Unauthorized Photocopy and Duplication Prohibited.
© 2020 MPS. All Rights Reserved.

TYPICAL APPLICATION CIRCUITS

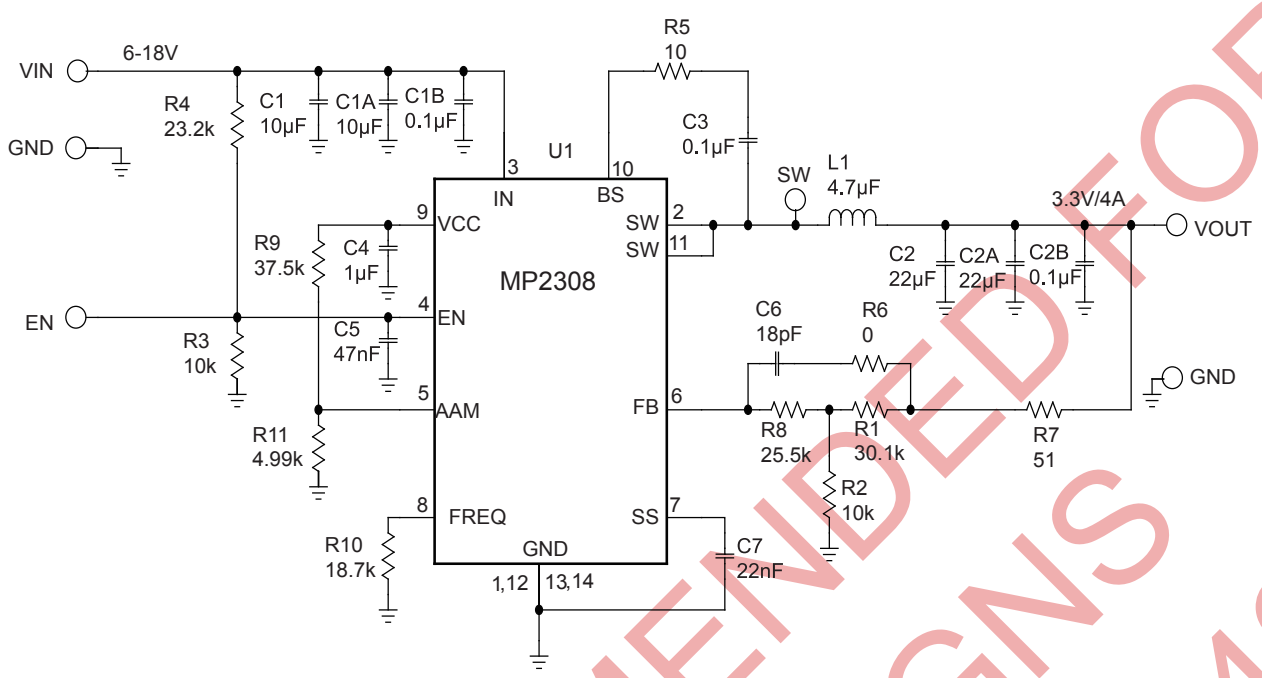

Figure 6— 800kHz, 3.3V Output at 4A Step-Down Converter

NOT RECOMMENDED FOR NEW DESIGNS REFER TO MP1499

MPS Proprietary Information. Patent Protected. Unauthorized Photocopy and Duplication Prohibited.
© 2020 MPS. All Rights Reserved.

PACKAGE INFORMATION

PACKAGE OUTLINE DRAWING FOR 14L FCQFN (2X3MM)
MF-PO-D-0114 revision 0.0

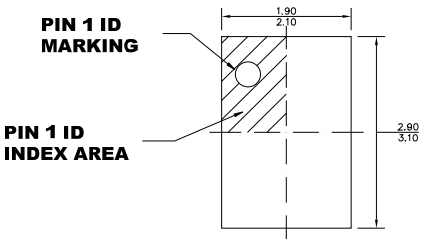

TOP VIEW

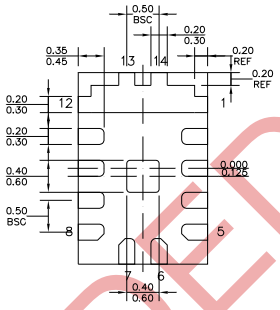

BOTTOM VIEW

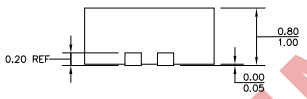

SIDE VIEW

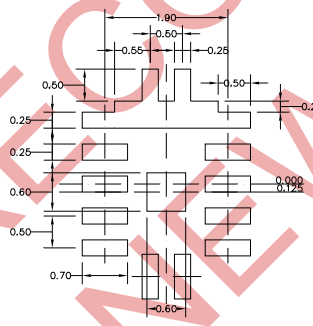

RECOMMENDED LAND PATTERN

NOTE:

1) ALL DIMENSIONS ARE IN MILLIMETERS.
2) EXPOSED PADDLE SIZE DOES NOT INCLUDE MOLD FLASH.
3) LEAD COPLANARITY SHALL BE 0.10 MILLIMETERS MAX.
4) JEDEC REFERENCE IS MO-220.
5) DRAWING IS NOT TO SCALE.

NOT RECOMMENDED FOR NEW DESIGNS REFER TO MP1499

NOTICE: The information in this document is subject to change without notice. Users should warrant and guarantee that third party Intellectual Property rights are not infringed upon when integrating MPS products into any application. MPS will not assume any legal responsibility for any said applications.

MPS Proprietary Information. Patent Protected. Unauthorized Photocopy and Duplication Prohibited.
© 2020 MPS. All Rights Reserved.