MP2240

High-Efficiency, 3A, 16V, 800kHz Synchronous, Step-Down Converter

The Future of Analog IC Technology®

DESCRIPTION

The MP2240 is a high-frequency, synchronous, rectified, step-down, switch-mode converter with built-in power MOSFETs. It offers a very compact solution to achieve a 3A continuous output current with excellent load and line regulation over a wide input supply range. The MP2240 has synchronous mode operation for higher efficiency over the output current load range.

Current-mode operation provides fast transient response and eases loop stabilization.

Full protection features include over-current protection and thermal shut down.

The MP2240 requires a minimal number of readily-available standard external components, and is available in a space-saving 8-pin TSOT23 package.

FEATURES

- 6V-to-16V Operating Input Range
- 80mΩ/30mΩ Low $R_{DS(ON)}$ Internal Power MOSFETs
- High-Efficiency Synchronous Mode Operation
- Fixed 800kHz Switching Frequency
- External AAM pin for Power-Save Mode Programming
- External Soft-Start
- OCP Protection and Hiccup
- Thermal Shutdown
- Output Adjustable from 0.8V
- Available in an 8-pin TSOT-23 Package

APPLICATIONS

- Notebook Systems and I/O Power
- Digital Set-Top Boxes
- Flat-Panel Television and Monitors
- Distributed Power Systems

All MPS parts are lead-free and adhere to the RoHS directive. For MPS green status, please visit MPS website under Quality Assurance. "MPS" and "The Future of Analog IC Technology" are Registered Trademarks of Monolithic Power Systems, Inc.

TYPICAL APPLICATION

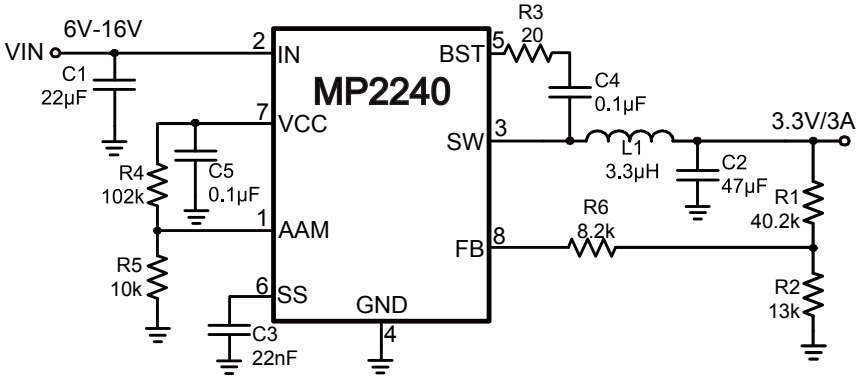

Efficiency vs. Output Current

AAM=0.44V, L=3.3µH, V_{OUT}=3.3V, I_{OUT}=0.01A-3A

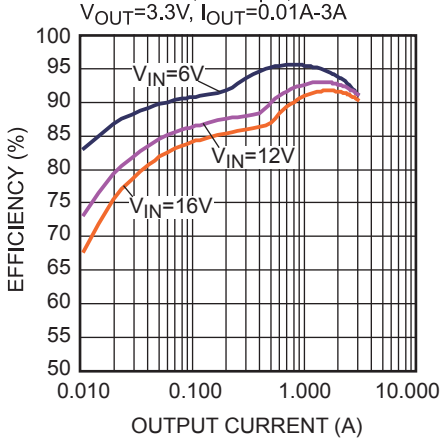

MPS Proprietary Information. Patent Protected. Unauthorized Photocopy and Duplication Prohibited.
© 2013 MPS. All Rights Reserved.

ORDERING INFORMATION

Part Number*	Package	Top Marking
MP2240GJ	TSOT-23-8	AHJ

* For Tape & Reel, add suffix –Z (e.g. MP2240GJ–Z);

PACKAGE REFERENCE

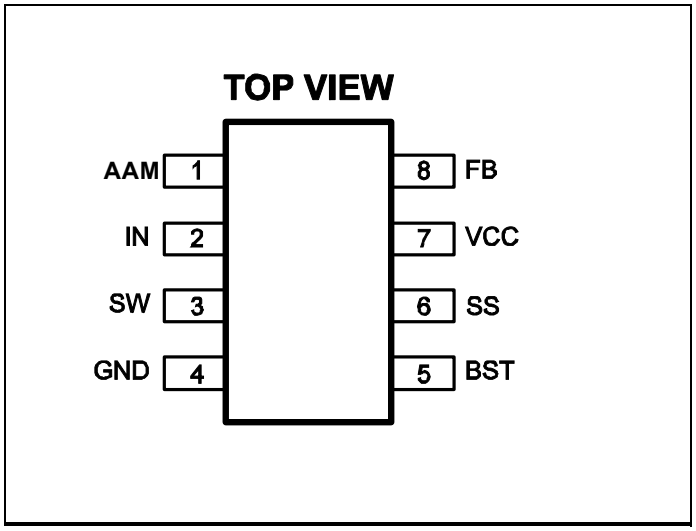

ABSOLUTE MAXIMUM RATINGS (1)

V_{IN} .....-0.3V to 17V
V_{SW} .....
-0.3V (-5V for <10ns) to 17V (19V for <10ns)
V_{BST} ..... V_{SW}+6V
All Other Pins .....-0.3V to 6V
Continuous Power Dissipation (T_A = +25°C) (2)
..... 1.25W
Junction Temperature .....150°C
Lead Temperature .....260°C
Storage Temperature..... -65°C to 150°C

Recommended Operating Conditions (3)

Supply Voltage V_{IN} .....6V to 16V
Output Voltage V_{OUT}.....0.8V to V_{IN} x 90%
Operating Junction Temp. (T_J). -40°C to +125°C

Thermal Resistance (4)

	θ_{JA}	θ_{JC}	
TSOT-23-8	100	55	°C/W

Notes:
1) Exceeding these ratings may damage the device.
2) The maximum allowable power dissipation is a function of the maximum junction temperature T_J (MAX), the junction-to-ambient thermal resistance θ_{JA}, and the ambient temperature T_A. The maximum allowable continuous power dissipation at any ambient temperature is calculated by P_D (MAX) = (T_J (MAX)-T_A)/θ_{JA}. Exceeding the maximum allowable power dissipation will cause excessive die temperature, and the regulator will go into thermal shutdown. Internal thermal shutdown circuitry protects the device from permanent damage.
3) The device is not guaranteed to function outside of its operating conditions.
4) Measured on JESD51-7, 4-layer PCB.

MPS Proprietary Information. Patent Protected. Unauthorized Photocopy and Duplication Prohibited.
© 2013 MPS. All Rights Reserved.

ELECTRICAL CHARACTERISTICS

V_{IN} = 12V, T_A = 25°C, unless otherwise noted.

Parameter	Symbol	Condition	Min	Typ	Max	Units
Supply Current (Quiescent)	I_q	V_{FB} = 1V, V_{AAM}=0.5V		0.55	0.8	mA
		V_{FB} = 1V, V_{AAM}=5V		0.75	1	
HS Switch-On Resistance	HS_{RDS-ON}	V_{BST-SW}=5V		80		mΩ
LS Switch-On Resistance	LS_{RDS-ON}	V_{CC} =5V		30		mΩ
Switch Leakage	SW_{LKG}	V_{SW} =12V			0.1	μA
Current Limit (5)	I_{LIMIT}	Under 40% Duty Cycle	4	5	6	A
Oscillator Frequency	f_{SW}	V_{FB}=0.75V	660	800	940	kHz
Fold-Back Frequency	f_{FB}	V_{FB}<400mV		0.25		f_{SW}
Maximum Duty Cycle	D_{MAX}	V_{FB}=750mV	90	95		%
Minimum On Time(5)	τ_{ON_MIN}			40		ns
Feedback Voltage	V_{FB}	T_A =25°C	791	807	823	mV
Feedback Current	I_{FB}	V_{FB}=820mV		10	50	nA
VIN Under-Voltage Lockout Threshold—Rising	$INUV_{Vth}$		4.9	5.3	5.85	V
VIN Under-Voltage Lockout Threshold—Hysteresis	$INUV_{HYS}$			1.1		V
VCC Regulator	V_{CC}		4.75	4.9	5.05	V
VCC Load Regulation		I_{CC}=5mA		3		%
Soft-Start Current	I_{SS}		7.6	10.5	13.4	μA
Thermal Shutdown (5)				150		°C
Thermal Hysteresis (5)				20		°C

Notes:

5) Guaranteed by design.

MPS Proprietary Information. Patent Protected. Unauthorized Photocopy and Duplication Prohibited.
© 2013 MPS. All Rights Reserved.

TYPICAL CHARACTERISTICS

V_{IN} = 12V, V_{OUT} = 3.3V, L=3.3μH, T_A = 25°C, unless otherwise noted.

Quiescent Current vs. Input Voltage
V_{IN}=6V-16V, V_{FB}=1V

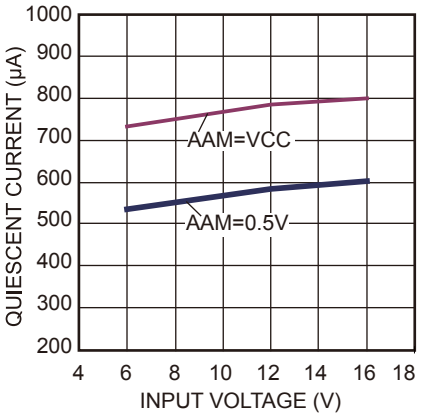

Case Temperature Rise vs. Output Current
I_{OUT}=0A-3A

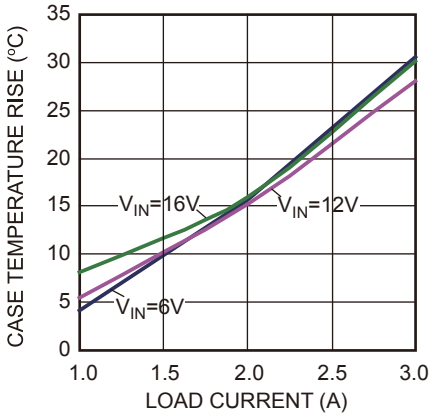

Load Regulation
V_{IN}=6V-16V, I_{OUT}=0A-3A

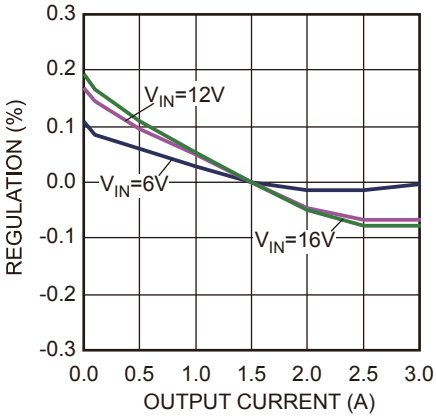

Line Regulation
V_{IN}=6V-16V

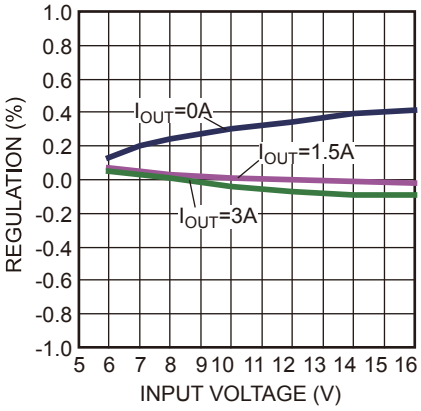

Current Limit vs. Duty Cycle

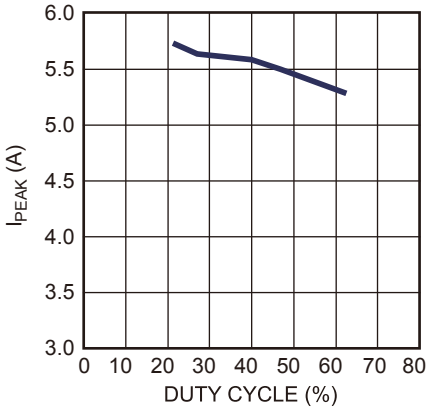

Reference voltage vs. Temperature

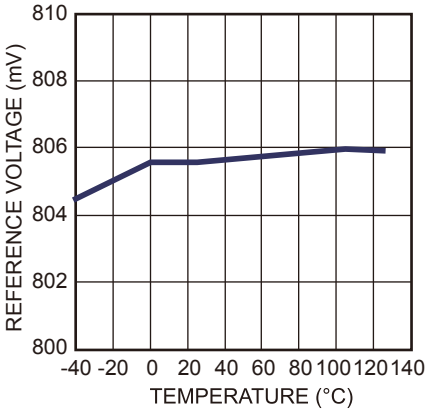

MPS Proprietary Information. Patent Protected. Unauthorized Photocopy and Duplication Prohibited.
© 2013 MPS. All Rights Reserved.

TYPICAL PERFORMANCE CHARACTERISTICS

Performance waveforms are tested on the evaluation board of the Design Example section.
V_{IN} = 12V, V_{OUT} = 3.3V, L=3.3μH, T_A = 25°C, unless otherwise noted.

Efficiency vs. Output Current
AAM=0.49V, L=3.3μH, V_{OUT}=5V, I_{OUT}=0.01A-3A

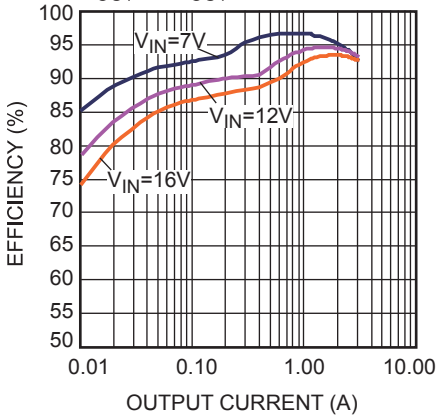

Efficiency vs. Output Current
AAM=0.44V, L=3.3μH, V_{OUT}=3.3V, I_{OUT}=0.01A-3A

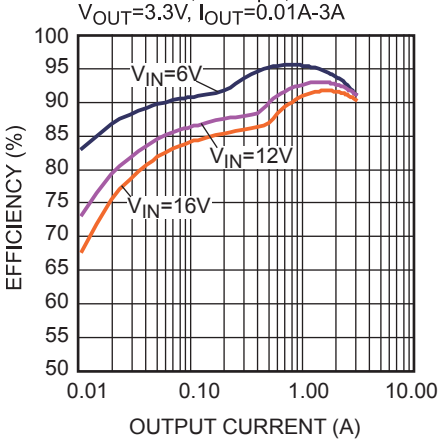

Efficiency vs. Output Current
AAM=0.41V,L=2.2μH, V_{OUT}=2.5V, I_{OUT}=0.01A-3A

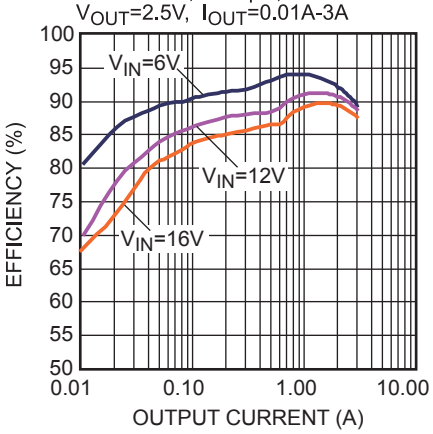

Efficiency vs. Output Current
AAM=0.33V, L=1.5μH, V_{OUT}=1.8V, I_{OUT}=0.01A-3A

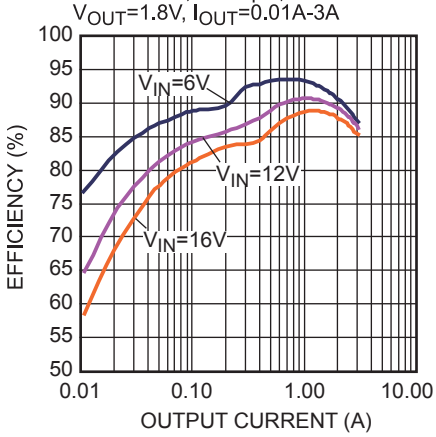

Efficiency vs. Output Current
AAM=0.31V,L=1.5μH, V_{OUT}=1.2V, I_{OUT}=0.01A-3A

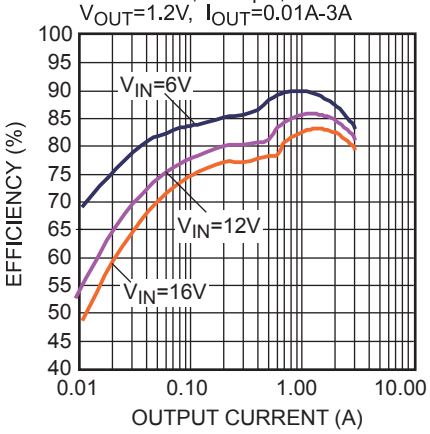

MPS Proprietary Information. Patent Protected. Unauthorized Photocopy and Duplication Prohibited.
© 2013 MPS. All Rights Reserved.

TYPICAL PERFORMANCE CHARACTERISTICS *(continued)*

Performance waveforms are tested on the evaluation board of the Design Example section.
V_{IN} = 12V, V_{OUT} = 3.3V, L=3.3μH, T_A = 25°C, unless otherwise noted.

Short Entry
I_{OUT} = 0A

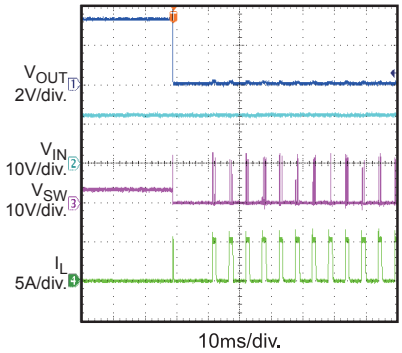

Short Recovery
I_{OUT} = 0A

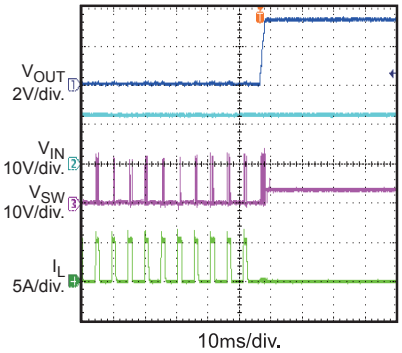

Startup through V_{IN}
I_{OUT} = 0A

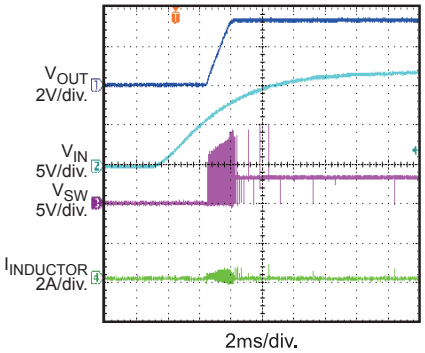

Startup through V_{IN}
I_{OUT} = 3A

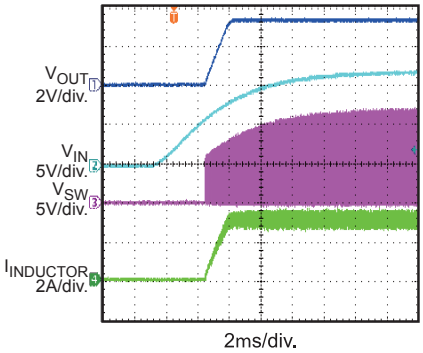

Shutdown through V_{IN}
I_{OUT} = 0A

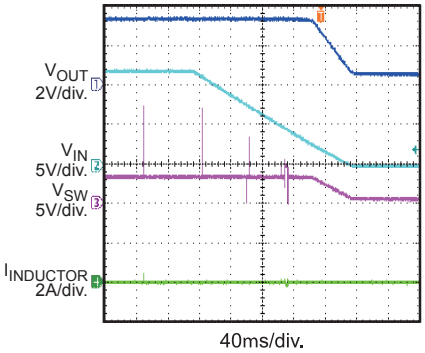

Shutdown through V_{IN}
I_{OUT} = 3A

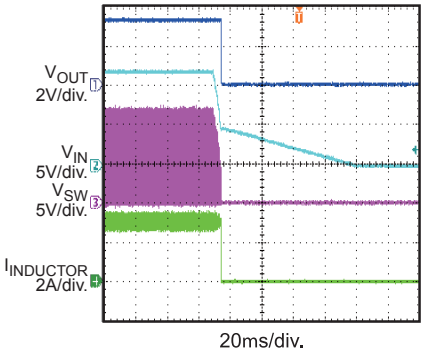

Input/Output Ripple
I_{OUT} = 3A

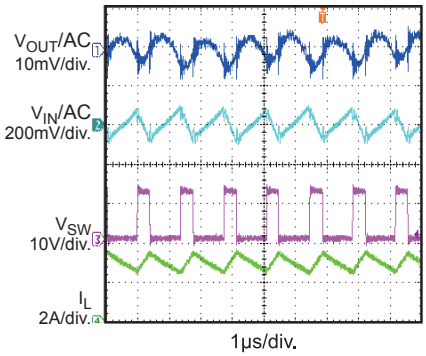

Load Transient Reponse
I_{OUT} = 1.5A-3A

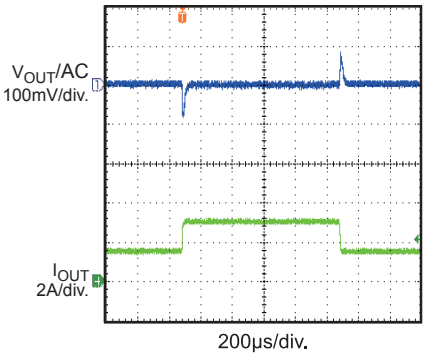

MPS Proprietary Information. Patent Protected. Unauthorized Photocopy and Duplication Prohibited.
© 2013 MPS. All Rights Reserved.

PIN FUNCTIONS

Package Pin #	Name	Description
1	AAM	Advanced Asynchronous Modulation. Connect the tap of 2 resistor dividers to force the MP2240 into non-synchronous mode under light loads. Drive AAM pin high (VCC) to force the MP2240 into CCM.
2	IN	Supply Voltage. The IN pin supplies power for internal MOSFET and regulator. The MP2240 operates from a +6V to +16V input rail. Requires a low-ESR, and low-inductance capacitor (C1) to decouple the input rail. Place the input capacitor very close to this pin and connect it with wide PCB traces and multiple vias.
3	SW	Switch Output. Connect to the inductor and bootstrap capacitor. This pin is driven up to V_{IN} by the high-side switch during the PWM duty cycle ON time. The inductor current drives the SW pin negative during the OFF time. The ON resistance of the low-side switch and the internal body diode fixes the negative voltage. Connect using wide PCB traces and multiple vias.
4	GND	System Ground. Reference ground of the regulated output voltage. PCB layout Requires extra care. For best results, connect to GND with copper and vias.
5	BST	Bootstrap. Requires a capacitor connected between SW and BST pins to form a floating supply across the high-side switch driver.
6	SS	Soft-Start. Connect an external capacitor to program the soft start time for the switch mode regulator.
7	VCC	Internal 5V LDO output. Powers the driver and control circuits. Decouple with 0.1μF-to-0.22μF capacitor. Do not use a capacitor ≥0.22μF.
8	FB	Feedback. Connect to the tap of an external resistor divider from the output to GND to set the output voltage. The frequency fold-back comparator lowers the oscillator frequency when the FB voltage is below 400mV to prevent current limit runaway during a short circuit fault. Place the resistor divider as close to the FB pin as possible. Avoid placing vias on the FB traces.

MPS Proprietary Information. Patent Protected. Unauthorized Photocopy and Duplication Prohibited.
© 2013 MPS. All Rights Reserved.

FUNCTIONAL BLOCK DIAGRAM

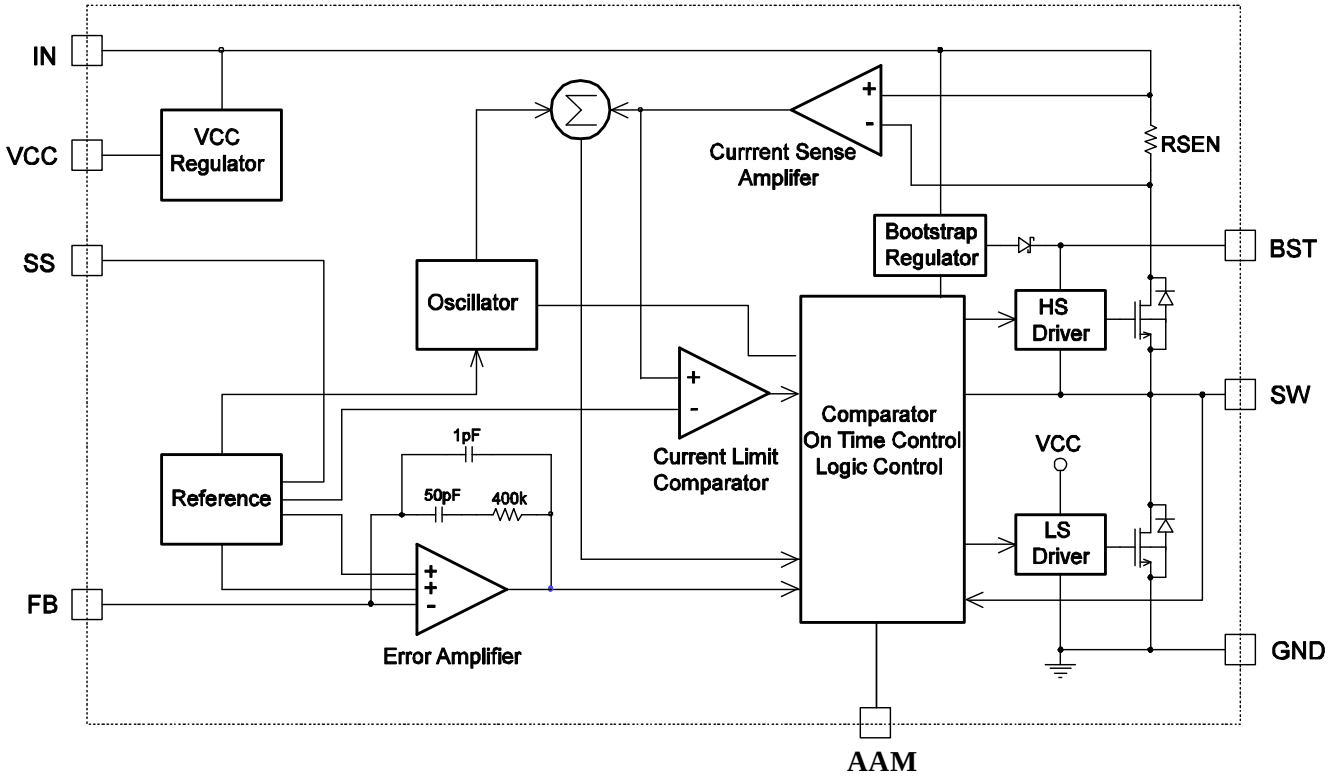

Figure 1: Functional Block Diagram

MPS Proprietary Information. Patent Protected. Unauthorized Photocopy and Duplication Prohibited.
© 2013 MPS. All Rights Reserved.

OPERATION

The MP2240 is a high-frequency, synchronous, rectified, step-down, switch-mode converter with built-in power MOSFETs. It offers a very compact solution that achieves a 3A continuous output current with excellent load and line regulation over a wide input supply range.

The MP2240 operates in a fixed-frequency, peak-current–control mode to regulate the output voltage. An internal clock initiates a PWM cycle. The integrated high-side power MOSFET turns on and remains on until the current reaches the value set by the COMP voltage. When the power switch is off, it remains off until the next clock cycle starts. If, within 95% of one PWM period, the current in the power MOSFET does not reach the value set by the COMP value, the power MOSFET is forced off.

Internal Regulator

A 5V internal regulator powers most of the internal circuitries. This regulator takes V_{IN} and operates in the full V_{IN} range. When V_{IN} exceeds 5.0V, the output of the regulator is in full regulation. When V_{IN} is less than 5.0V, the output decreases, and the part requires a 0.1μF ceramic decoupling capacitor.

Error Amplifier

The error amplifier compares the FB pin voltage to the internal 0.807V reference (V_{REF}) and outputs a current proportional to the difference between the two. This output current then charges or discharges the internal compensation network to form the COMP voltage, which controls the power MOSFET current. The optimized internal compensation network minimizes the external component counts and simplifies the control loop design.

Under-Voltage Lockout (UVLO)

The MP2240 has under-voltage lock-out protection (UVLO). When the VCC voltage exceeds the UVLO rising threshold voltage, the MP2240 powers up. It shuts off when the VCC voltage drops below the UVLO falling threshold voltage. This is non-latch protection.

Soft-Start

Adjust the soft-start time by connecting a capacitor from SS pin to ground. When the soft-start begins, an internal 11μA current source charges the external capacitor. During soft-start, the soft-start capacitor connects to the non-inverting input of the error amplifier. The soft-start period continues until the voltage on the soft-start capacitor exceeds the 0.8V reference. Then the non-inverting amplifier uses the reference voltage takes as the input. Use the following equation to calculate the soft-start time:

$$t_{SS}(ms) = \frac{0.8V \times Css(nF)}{11\mu A}$$

Over-Current-Protection and Hiccup

The MP2240 has a cycle-by-cycle over-current limit when the inductor current peak value exceeds the set current limit threshold. Meanwhile, the output voltage drops until V_{FB} is below the Under-Voltage (UV) threshold—typically 50% below the reference. Once UV is triggered, the MP2240 enters hiccup mode to periodically restart the part. This protection mode is especially useful when the output is dead-shorted to ground, and greatly reduces the average short circuit current to alleviate thermal issues and protect the regulator. The MP2240 exits the hiccup mode once the over-current condition is removed.

Thermal Shutdown

Thermal shutdown prevents the chip from operating at exceedingly high temperatures. When the silicon die reaches temperatures that exceed 150°C, it shuts down the whole chip. When the temperature drops below its lower threshold, typically 130°C, the chip is enabled again.

Floating Driver and Bootstrap Charging

An external bootstrap capacitor powers the floating power MOSFET driver. This floating driver has its own UVLO protection. This UVLO's rising threshold is 2.2V with a hysteresis of 150mV. The bootstrap capacitor voltage is regulated internally by V_{IN} through D1, M1, R3, C4, L1 and C2 (Figure 2). If (V_{IN}-V_{SW})

MPS Proprietary Information. Patent Protected. Unauthorized Photocopy and Duplication Prohibited.
© 2013 MPS. All Rights Reserved.

exceeds 5V, U1 will regulate M1 to maintain a 5V BST voltage across C4. A 20Ω resistor placed between SW and BST cap. is strongly recommended to reduce SW spike voltage.

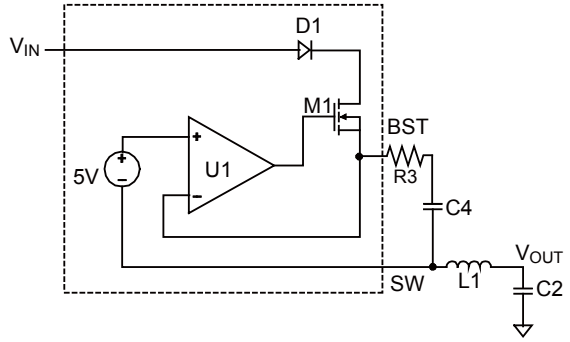

Figure 2: Internal Bootstrap Charging Circuit

Startup and Shutdown

If V_{IN} exceeds its thresholds, the chip starts. The reference block starts first, generating stable reference voltage and currents, and then the internal regulator is enabled. The regulator provides a stable supply for the remaining circuitries.

Three events can shut down the chip: V_{IN} low, and thermal shutdown. During the shutdown procedure, the signaling path is first blocked to avoid any fault triggering. The COMP voltage and the internal supply rail are then pulled down. The floating driver is not subject to this shutdown command.

MPS Proprietary Information. Patent Protected. Unauthorized Photocopy and Duplication Prohibited.
© 2013 MPS. All Rights Reserved.

APPLICATION INFORMATION

Setting the Output Voltage

The external resistor divider sets the output voltage (see Typical Application on page 1). The feedback resistor R1 also sets the feedback loop bandwidth with the internal compensation capacitor (see Typical Application on page 1). Choose R1 around 40kΩ. R2 is then given by:

$$R2 = \frac{R1}{\frac{V_{OUT}}{0.807V} - 1}$$

The T-type network—as shown in Figure 3—is highly recommended when V_{OUT} is low.

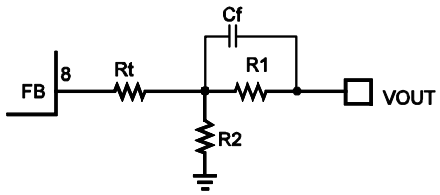

Figure 3: T-Type Network

Table 1 lists the recommended T-type resistors value for common output voltages.

Table 1: Resistor Selection for Common Output Voltages

V_{OUT} (V)	R1 (kΩ)	R2 (kΩ)	Rt (kΩ)	Cf(pF)	L(μH)
1.0	20.5	84.5	49.9	22	1.5
1.2	30.1	61.9	33	22	1.5
1.8	40.2	32.4	15	22	2.2
2.5	40.2	19.1	13	22	2.2
3.3	40.2	13	8.2	22	3.3
5	40.2	7.68	8.2	22	3.3

Selecting the Inductor

Use a1μH-to-10μH inductor with a DC current rating of at least 25% percent higher than the maximum load current for most applications. For highest efficiency, use an inductor with a DC resistance less than 15mΩ. For most designs, the inductance value can be derived from the following equation.

$$L_1 = \frac{V_{OUT} \times (V_{IN} - V_{OUT})}{V_{IN} \times \Delta I_L \times f_{OSC}}$$

Where ΔI_L is the inductor ripple current.

Choose the inductor ripple current to be approximately 30% of the maximum load current. The maximum inductor peak current is:

$$I_{L(MAX)} = I_{LOAD} + \frac{\Delta I_L}{2}$$

Use a larger inductor for improved efficiency under light-load conditions—below 100mA.

Selecting the Input Capacitor

The input current to the step-down converter is discontinuous, therefore requires a capacitor is to supply the AC current to the step-down converter while maintaining the DC input voltage. Use low ESR capacitors for the best performance. Use ceramic capacitors with X5R or X7R dielectrics for best results because of their low ESR and small temperature coefficients. For most applications, use a 22μF capacitor.

Since C1 absorbs the input switching current, it requires an adequate ripple current rating. The RMS current in the input capacitor can be estimated by:

$$I_{C1} = I_{LOAD} \times \sqrt{\frac{V_{OUT}}{V_{IN}} \times \left(1 - \frac{V_{OUT}}{V_{IN}}\right)}$$

The worse case condition occurs at $V_{IN} = 2V_{OUT}$, where:

$$I_{C1} = \frac{I_{LOAD}}{2}$$

For simplification, choose an input capacitor with an RMS current rating greater than half of the maximum load current.

The input capacitor can be electrolytic, tantalum or ceramic. When using electrolytic or tantalum capacitors, add a small, high quality ceramic capacitor (e.g. 0.1μF) placed as close to the IC as possible. When using ceramic capacitors, make sure that they have enough capacitance to provide sufficient charge to prevent excessive voltage ripple at input. The input voltage ripple caused by capacitance can be estimated as:

$$\Delta V_{IN} = \frac{I_{LOAD}}{f_S \times C1} \times \frac{V_{OUT}}{V_{IN}} \times \left(1 - \frac{V_{OUT}}{V_{IN}}\right)$$

MPS Proprietary Information. Patent Protected. Unauthorized Photocopy and Duplication Prohibited.
© 2013 MPS. All Rights Reserved.

Setting the AAM Voltage

The AAM voltage sets the transition point from AAM to CCM. Select a voltage to balance efficiency, stability, ripple, and transient.

A low AAM voltage improves stability and ripple, but degrades transient and efficiency during AAM. Likewise, a high AAM voltage improves the transient and efficiency during AAM, but degrades stability and ripple.

The AAM voltage comes from the tap of a resistor divider from V_{CC} (4.9V) to GND, as shown in Figure .

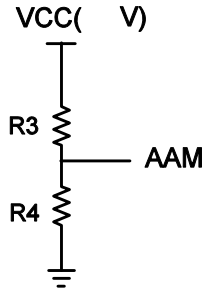

Figure 4: AAM Network

Generally, choose R4 to be around 10kΩ, and then R3 is:

$$R3 = R4\left(\frac{VCC}{AAM} - 1\right)$$

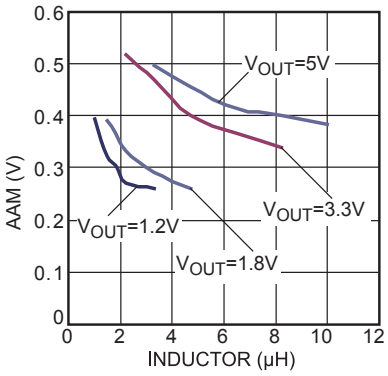

Figure 5: AAM Values for Common Output Voltages (V_{IN} = 6V to 16V)

Selecting the Output Capacitor

The output capacitor (C2) maintains the DC output voltage. Use ceramic, tantalum, or low-ESR electrolytic capacitors. For best results, use low ESR capacitors to keep the output voltage ripple low. The output voltage ripple can be estimated as:

$$\Delta V_{OUT} = \frac{V_{OUT}}{f_S \times L_1} \times \left(1 - \frac{V_{OUT}}{V_{IN}}\right) \times \left(R_{ESR} + \frac{1}{8 \times f_S \times C2}\right)$$

Where L_1 is the inductor value and R_{ESR} is the equivalent series resistance (ESR) value of the output capacitor.

For ceramic capacitors, the capacitance dominates the impedance at the switching frequency, and the capacitance causes the majority of the output voltage ripple. For simplification, the output voltage ripple can be estimated as:

$$\Delta V_{OUT} = \frac{V_{OUT}}{8 \times f_S^2 \times L_1 \times C2} \times \left(1 - \frac{V_{OUT}}{V_{IN}}\right)$$

For tantalum or electrolytic capacitors, the ESR dominates the impedance at the switching frequency. For simplification, the output ripple can be approximated as:

$$\Delta V_{OUT} = \frac{V_{OUT}}{f_S \times L_1} \times \left(1 - \frac{V_{OUT}}{V_{IN}}\right) \times R_{ESR}$$

The characteristics of the output capacitor also affect the stability of the regulation system. The MP2240 can be optimized for a wide range of capacitance and ESR values.

External Bootstrap Diode

An external bootstrap diode can enhance the efficiency of the regulator given the following conditions:

4.9

- V_{OUT} is 5V or 3.3V; and
- Duty cycle is high: $D = \frac{V_{OUT}}{V_{IN}} > 65\%$

In these cases, add an external BST diode from the VCC pin to BST pin, as shown in Figure 6.

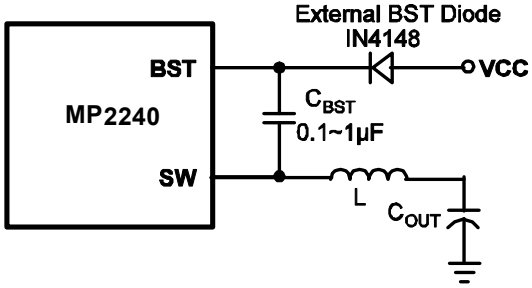

Figure 6: Optional External Bootstrap Diode to Enhance Efficiency

MPS Proprietary Information. Patent Protected. Unauthorized Photocopy and Duplication Prohibited.
© 2013 MPS. All Rights Reserved.

The recommended external BST diode is IN4148, and the BST capacitor value is 0.1μF to 1μF.

PC Board Layout [8]

PCB layout is very important to achieve stable operation especially for VCC capacitor and input capacitor placement. For best results, follow these guidelines:

1. Use large ground plane directly connect to GND pin. Add vias near the GND pin if bottom layer is ground plane.
2. Place the VCC capacitor to VCC pin and GND pin as close as possible. Make the trace length of VCC pin-VCC capacitor anode-VCC capacitor cathode-chip GND pin as short as possible.
3. Place the ceramic input capacitor close to IN and GND pins. Keep the connection of input capacitor and IN pin as short and wide as possible.
4. Route SW, BST away from sensitive analog areas such as FB. It's not recommended to route SW, BST trace under chip's bottom side.
5. Place the T-type feedback resistor R6 close to chip to ensure the trace which connects to FB pin as short as possible

Notes:

8) The recommended layout is based on Typical Application circuit on the next page.

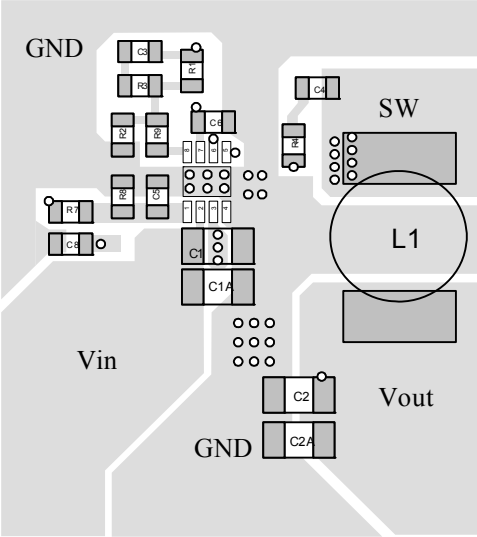

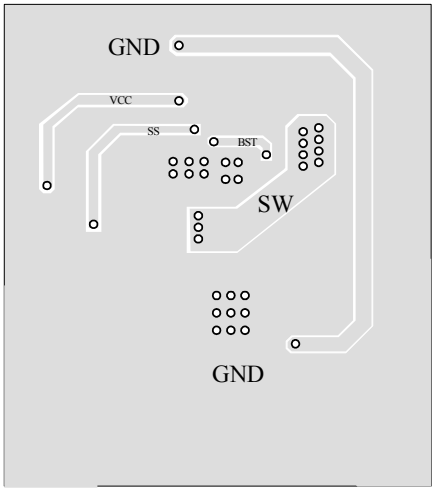

Design Example

Below is a design example following the application guidelines for the specifications:

Table 2: Design Example

V_{IN}	12V
V_{OUT}	3.3V
Io	3A

The detailed application schematic is shown in next page. The typical performance and circuit waveforms have been shown in the Typical Performance Characteristics section. For more device applications, please refer to the related Evaluation Board Datasheets.

MPS Proprietary Information. Patent Protected. Unauthorized Photocopy and Duplication Prohibited.
© 2013 MPS. All Rights Reserved.

TYPICAL APPLICATION CIRCUITS

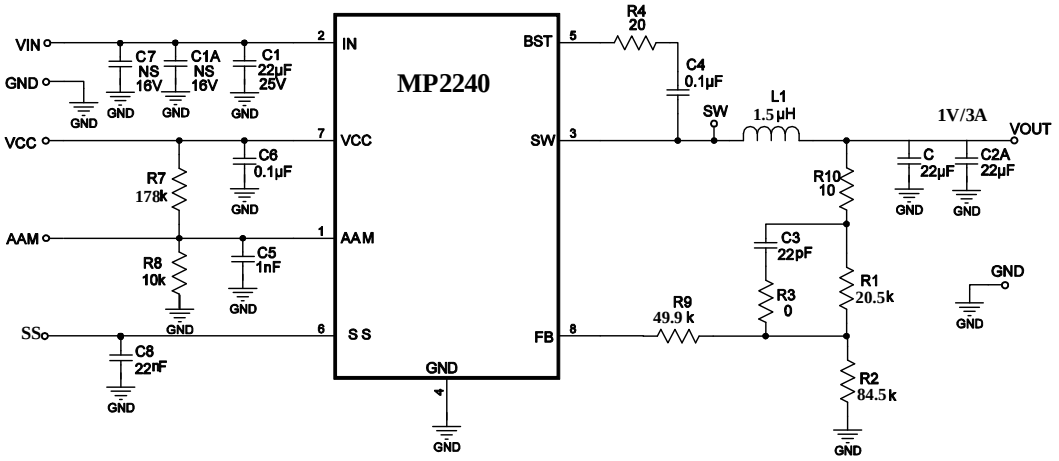

Figure 7: 12V$_{IN}$, 1V/3A Output

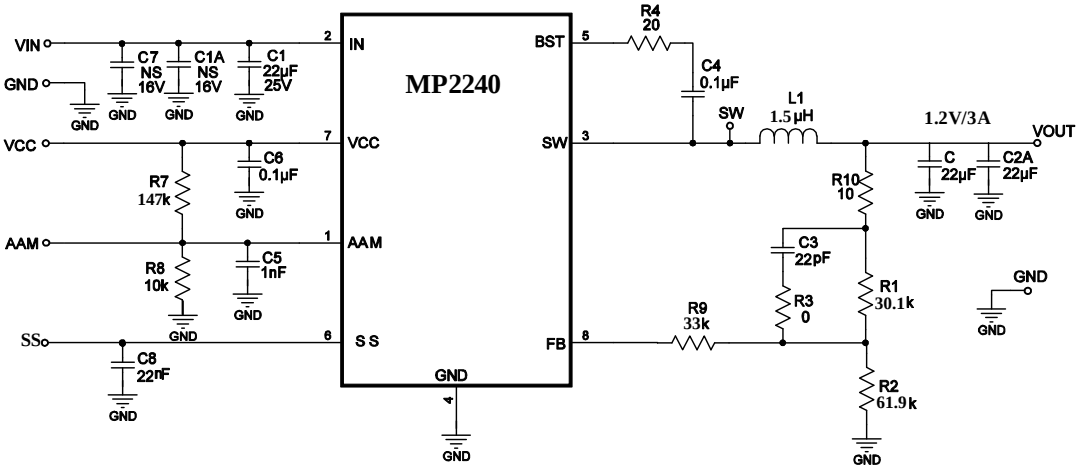

Figure 8: 12V$_{IN}$, 1.2V/3A Output

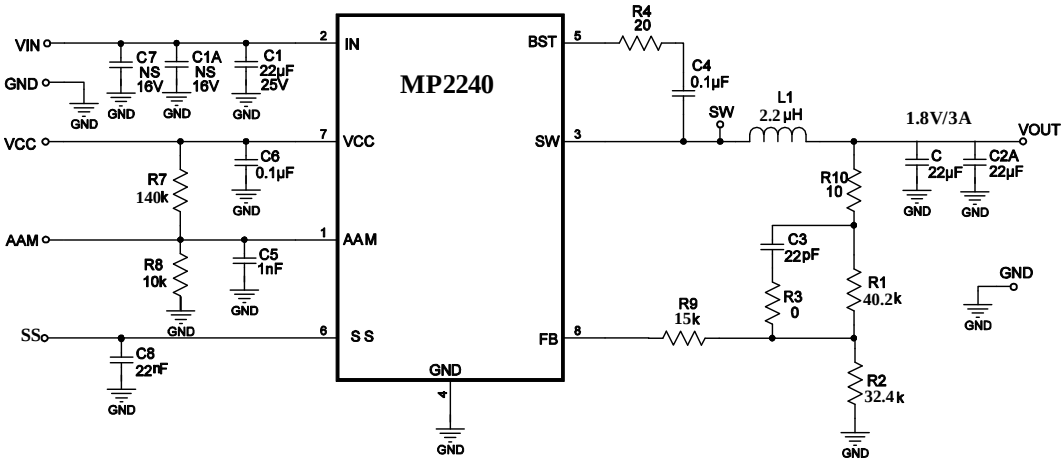

Figure 9: 12V$_{IN}$, 1.8V/3A Output

MPS Proprietary Information. Patent Protected. Unauthorized Photocopy and Duplication Prohibited.
© 2013 MPS. All Rights Reserved.

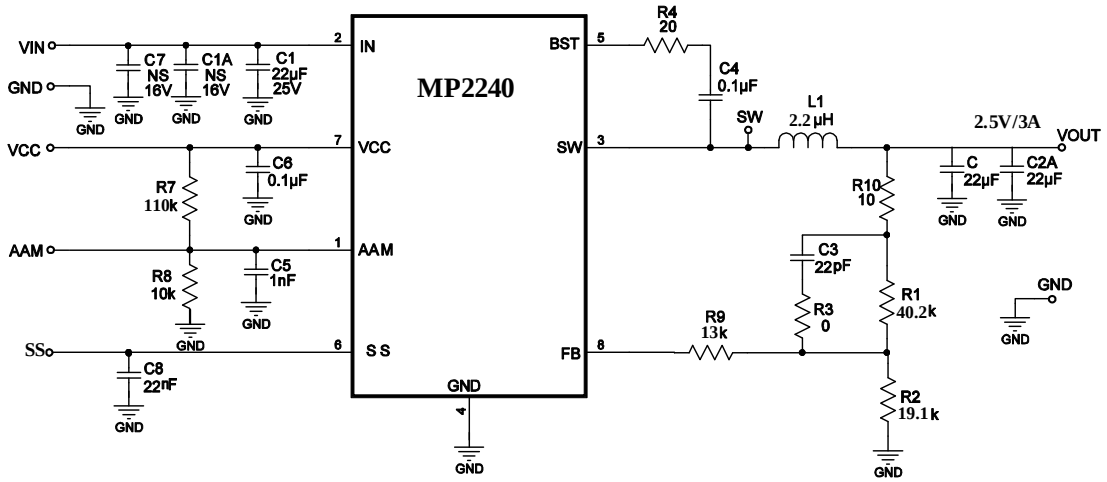

Figure 10: 12V$_{IN}$, 2.5V/3A Output

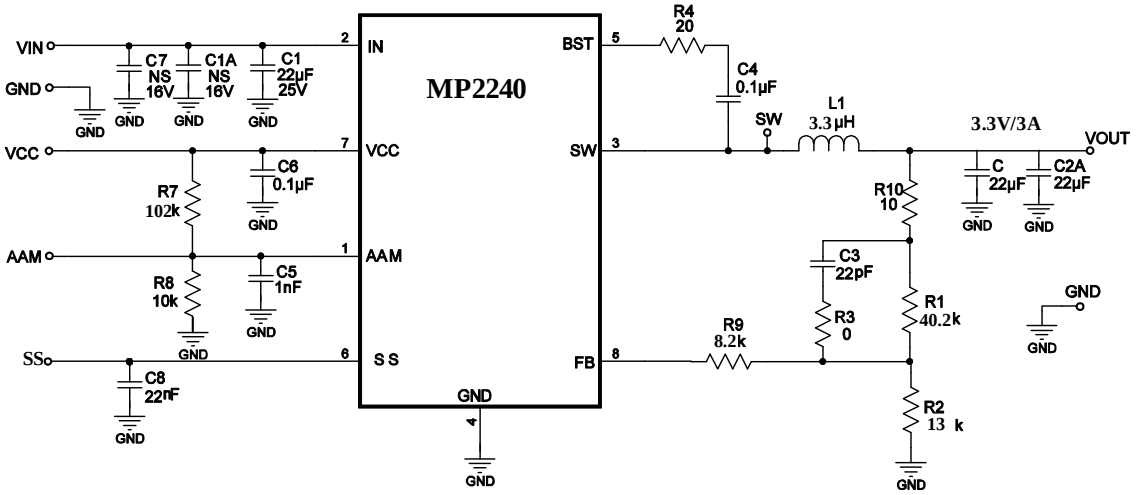

Figure 11: 12V$_{IN}$, 3.3V/3A Output

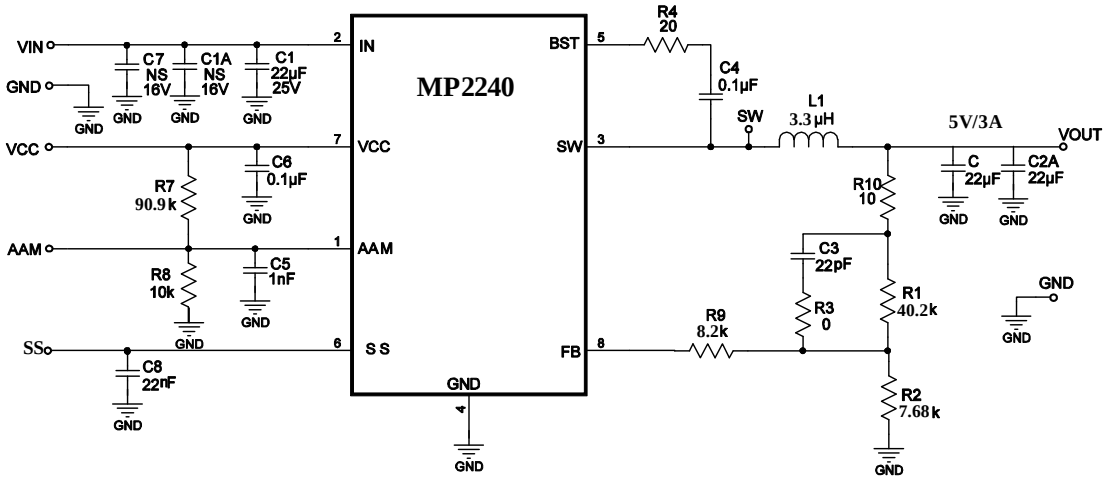

Figure 12: 12V$_{IN}$, 5V/3A Output

MPS Proprietary Information. Patent Protected. Unauthorized Photocopy and Duplication Prohibited.
© 2013 MPS. All Rights Reserved.

PACKAGE INFORMATION

TSOT23-8

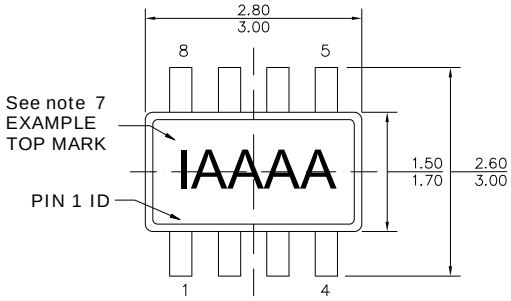

TOP VIEW

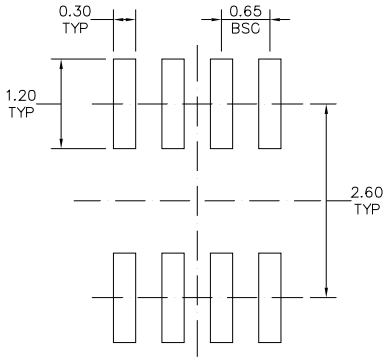

RECOMMENDED LAND PATTERN

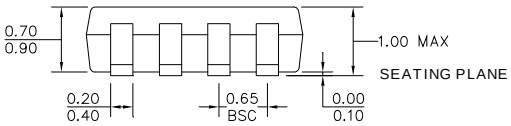

FRONT VIEW

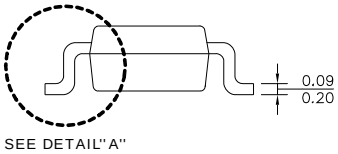

SIDE VIEW

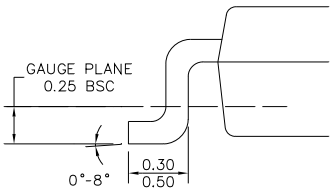

DETAIL "A"

NOTE:

1) ALL DIMENSIONS ARE IN MILLIMETERS
2) PACKAGE LENGTH DOES NOT INCLUDE MOLD FLASH, PROTRUSION OR GATE BURR
3) PACKAGE WIDTH DOES NOT INCLUDE INTERLEAD FLASH OR PROTRUSION
4) LEAD COPLANARITY(BOTTOM OF LEADS AFTER FORMING) SHALL BE 0.10 MILLIMETERS MAX.
5) JEDEC REFERENCE IS MO-193, VARIATION BA
6) DRAWING IS NOT TO SCALE
7) PIN 1 IS LOWER LEFT PIN WHEN READING TOP MARK FROM LEFT TO RIGHT, (SEE EXAMPLE TOP MARK)

NOTICE: The information in this document is subject to change without notice. Users should warrant and guarantee that third party Intellectual Property rights are not infringed upon when integrating MPS products into any application. MPS will not assume any legal responsibility for any said applications.

MPS Proprietary Information. Patent Protected. Unauthorized Photocopy and Duplication Prohibited.
© 2013 MPS. All Rights Reserved.