MP38900/MP38900-B

High Efficiency, Fast Transient, 10A, 16V Synchronous Step-down Converter In a Tiny QFN20 (3x4mm) Package

The Future of Analog IC Technology®

END OF LIFE

DESCRIPTION

The MP38900/MP38900-B is a fully integrated, high frequency synchronous rectified step-down switch mode converter. It offers a very compact solution to achieve 10A continuous output current over a wide input supply range with excellent load and line regulation. The MP38900/ MP38900-B operates at high efficiency over a wide output current load range.

The table below summarizes the variations among the MP38900 and the MP38900-B.

MP38900	External V_{CC}	OCP Latch Off	Soft SHDN
MP38900-B	Built-in V_{CC}	OCP Hiccup	Hi-Z SHDN

To futher optimize efficiency at light load, the V_{CC} supply of MP38900 is designed to be biased externally.

Constant-On-Time (COT) control mode provides fast transient response and eases loop stabilization.

Full protection features include SCP, OCP, OVP, UVP and thermal shutdown.

The MP38900/MP38900-B requires a minimum number of readily available standard external components and is available in a space-saving QFN20 (3x4mm) package.

FEATURES

- Wide 4.5V to 16V Operating Input Range
- 10A Output Current
- Internal 27mΩ High-Side, 10mΩ Low-Side Power MOSFETs
- Proprietary Switching Loss Reduction Technique
- 1% Reference Voltage
- Programmable Soft Start Time
- Soft Shutdown (MP38900,)
- High-Z Shutdown (MP38900-B)
- Programmable Switching Frequency
- SCP, OCP, OVP, UVP Protection and Thermal Shutdown
- Output Adjustable from 0.8V to 13V
- Available in a QFN20 (3x4mm) Package

APPLICATIONS

- Notebook Systems and I/O Power
- Networking Systems
- Optical Communication Systems
- Distributed Power POL Systems

All MPS parts are lead-free and adhere to the RoHS directive. For MPS green status, please visit MPS website under Quality Assurance. "MPS" and "The Future of Analog IC Technology" are Registered Trademarks of Monolithic Power Systems, Inc.

MPS Proprietary Information. Patent Protected. Unauthorized Photocopy and Duplication Prohibited.
© 2021 MPS. All Rights Reserved.

END OF LIFE

TYPICAL APPLICATION

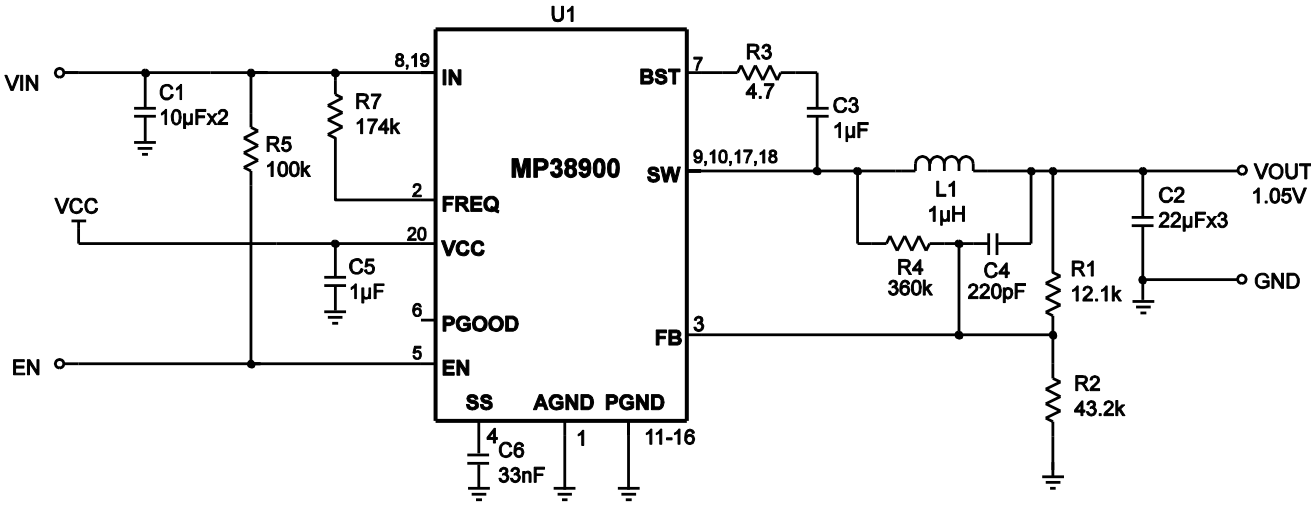

MPS Proprietary Information. Patent Protected. Unauthorized Photocopy and Duplication Prohibited.
© 2021 MPS. All Rights Reserved.

END OF LIFE

ORDERING INFORMATION

Part Number	Package	Top Marking
MP38900DL*	QFN20 (3x4mm)	38900
MP38900DL-B***	QFN20 (3x4mm)	38900B

***** For Tape & Reel, add suffix –Z (e.g. MP38900DL–Z)
For RoHS compliant packaging, add suffix –LF (e.g. MP38900DL–LF–Z)
***For Tape & Reel, add suffix –Z (e.g. MP38900DL-B–Z)
For RoHS compliant packaging, add suffix –LF (e.g. MP38900DL-B–LF–Z)

PACKAGE REFERENCE

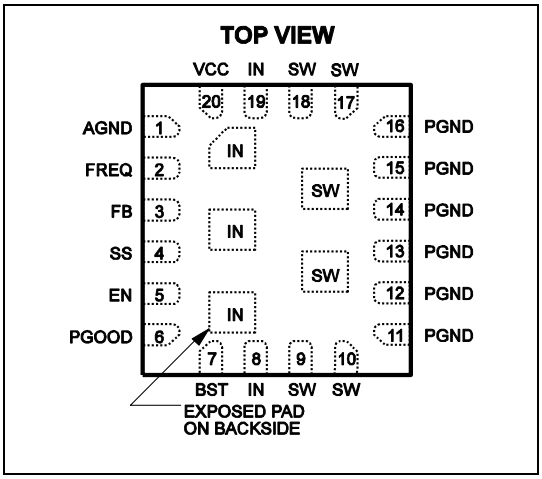

ABSOLUTE MAXIMUM RATINGS (1)

Supply Voltage V_{IN} 18V
Supply Voltage V_{CC} 6V
V_{SW} ..... -0.3V to V_{IN} + 0.3V
V_{BST} ..... V_{SW} + 6V
$I_{VIN\ (RMS)}$ 3.5A
V_{PGOOD} ..... -0.3V to V_{CC} +0.6V
All Other Pins ..... -0.3V to +6V
Continuous Power Dissipation (T_A = +25°C) (2)
..... 2.6W
Junction Temperature ..... 150°C
Lead Temperature ..... 260°C
Storage Temperature ..... -65°C to +150°C

Recommended Operating Conditions (3)

Supply Voltage V_{IN} ..... 4.5V to 16V
Supply Voltage V_{CC} 5V
Output Voltage V_{OUT} ..... 0.8V to 13V
Operating Junction Temp. (T_J). -40°C to +125°C

Thermal Resistance (4) θ_{JA} θ_{JC}

QFN20 (3x4mm) ..... 48 ..... 10 ... °C/W

Notes:
1) Exceeding these ratings may damage the device.
2) The maximum allowable power dissipation is a function of the maximum junction temperature T_J(MAX), the junction-to-ambient thermal resistance θ_{JA}, and the ambient temperature T_A. The maximum allowable continuous power dissipation at any ambient temperature is calculated by $P_D(MAX)=(T_J(MAX)-T_A)/\theta_{JA}$. Exceeding the maximum allowable power dissipation will cause excessive die temperature, and the regulator will go into thermal shutdown. Internal thermal shutdown circuitry protects the device from permanent damage.
3) The device is not guaranteed to function outside of its operating conditions.
4) Measured on JESD51-7, 4-layer PCB.

MPS Proprietary Information. Patent Protected. Unauthorized Photocopy and Duplication Prohibited.
© 2021 MPS. All Rights Reserved.

ELECTRICAL CHARACTERISTICS

V_{IN} = 12V, V_{CC}=5V, T_A = +25°C, unless otherwise noted.

Parameters	Symbol	Condition	Min	Typ	Max	Units
Input Supply Current (Shutdown)	I_{IN}	V_{EN} = 0V		0	1	μA
Input Supply Current (Quiescent)	I_{IN}	V_{EN} = 2V, V_{FB} = 0.95V, MP38900-B (6)		420		μA
Input Supply Current (Quiescent)	I_{IN}	V_{EN} = 2V, V_{FB} = 0.95V MP38900 (6)		40		μA
V_{CC} Supply Current (Quiescent)	Ivcc	V_{EN} = 2V, V_{FB} = 1V MP38900		350		μA
HS Switch On Resistance (5)	HS_{RDS-ON}			27		mΩ
LS Switch On Resistance (5)	LS_{RDS-ON}			10		mΩ
Switch Leakage	SW_{LKG}	V_{EN} = 0V, V_{SW} = 0V or 12V		0	1	μA
Current Limit	I_{LIMIT}			16.5		A
One-Shot On Time	T_{ON}	R7=250kΩ, V_{OUT}=1.05V		300		ns
Minimum Off Time(5)	T_{OFF}			100		ns
Fold-back Off Time(5)	T_{FB}	I_{LIM}=1 (HIGH)		7.5		μs
OCP hold-off time(5)	T_{OC}	I_{LIM}=1 (HIGH)		50		μs
Feedback Voltage	V_{FB}		807	815	823	mV
Feedback Current	I_{FB}	V_{FB} = 815mV		10	50	nA
Soft Start Charging Current	$+I_{SS}$	V_{SS}=0V		8.5		μA
Soft Stop Discharging Current	$-I_{SS}$	V_{SS}=0.815V		8.5		μA
Power Good Rising Threshold	$PGOOD_{Vth-Hi}$			0.9		V_{FB}
Power Good Falling Threshold	$PGOOD_{Vth-Lo}$			0.85		V_{FB}
Power Good Rising Delay	T_{PGOOD}	Tss = 2ms, MP38900		1.5		ms
Power Good Rising Delay	T_{PGOOD}	MP38900-B		1.5		ms
EN Rising Threshold	EN_{Vth-Hi}		1.05	1.35	1.60	V
EN Threshold Hysteresis	$EN_{Vth-Hys}$			420		mV
EN Input Current	I_{EN}	V_{EN} = 2V		1.5		μA
V_{CC} Under-Voltage Lockout Threshold Rising	$V_{CC}UV_{Vth}$	MP38900	3.8	4.0	4.2	V
V_{CC} Under-Voltage Lockout Threshold Hysteresis	$V_{CC}UV_{HYS}$	MP38900		880		mV
VIN Under-Voltage Lockout Threshold Rising	$VINUV_{Vth}$	MP38900-B	3.8	4.0	4.2	V
VIN Under-Voltage Lockout Threshold Hysteresis	$VINUV_{HYS}$	MP38900-B		880		mV
V_{CC} Regulator Output Voltage	V_{CC}	MP38900-B		5		V
V_{CC} Regulator Load Regulation		MP38900-B, I_{CC}=5mA			5	%
V_{OUT} Over-Voltage Protection Threshold	V_{OVP}			1.25		V_{FB}

MPS Proprietary Information. Patent Protected. Unauthorized Photocopy and Duplication Prohibited.
© 2021 MPS. All Rights Reserved.

END OF LIFE

ELECTRICAL CHARACTERISTICS *(continued)*

V_{IN} = 12V, V_{CC}=5V, T_A = +25°C, unless otherwise noted.

Parameters	Symbol	Condition	Min	Typ	Max	Units
V_{OUT} Under-Voltage Detection Threshold	V_{UVP}			0.7		V_{FB}
Thermal Shutdown	T_{SD}			150		°C
Thermal Shutdown Hysteresis	T_{SD-HYS}			25		°C

Notes:
5) Guaranteed by design.
6) If the test condition is marked with MP38900 or MP38900-B, the characteristic applies to MP38900 or MP38900-B respectively.

MPS Proprietary Information. Patent Protected. Unauthorized Photocopy and Duplication Prohibited.
© 2021 MPS. All Rights Reserved.

PIN FUNCTIONS

Pin #	Name	Description
1	AGND	Analog Ground.
2	FREQ	Frequency Set during CCM operation. The ON period is determined by the input voltage and the frequency-set resistor connected to FREQ pin. Connect a resistor to IN for line feed-forward. Decouple with a 1nF capacitor.
3	FB	Feedback. An external resistor divider from the output to GND, tapped to the FB pin, sets the output voltage.
4	SS	Soft Start. Connect an external SS capacitor to program the soft start time for the switch mode regulator. When the EN pin becomes high, an internal current source (8.5μA) charges up the SS capacitor and the SS voltage slowly ramps up from 0 to V_{FB} smoothly. For MP38900, when the EN pin becomes low, an internal current source (8.5μA) discharges the SS capacitor and the SS voltage slowly ramps down. For MP38900-B, SS will pull low as soon as EN goes low.
5	EN	EN=1 to enable the MP38900/MP38900-B. For automatic start-up, connect EN pin to IN with a 100kΩ resistor. It includes an internal 1MΩ pull-down resistor.
6	PGOOD	Power Good Output. The output of this pin is an open drain and is high if the output voltage is higher than 90% of the nominal voltage. There is delay from FB ≥ 90% to PGOOD high, which is 50% of SS time plus 0.5ms. For MP38900-B, the delay is fixed as 1.5ms.
7	BST	Bootstrap. A capacitor connected between SW and BS pins is required to form a floating supply across the high-side switch driver.
8, 19	IN	Supply Voltage. The MP38900/MP38900-B operates from a +4.5V to +16V input rail. C1 is needed to decouple the input rail. Use wide PCB traces and multiple vias to make the connection.
9, 10, 17, 18	SW	Switch Output. Use wide PCB traces and multiple vias to make the connection.
11-16	PGND	System Ground. This pin is the reference ground of the regulated output voltage. For this reason care must be taken in PCB layout.
20	VCC	MP38900: External 5V Supply. This 5V supply has to be applied in order to bias the device. Decouple with a 1μF capacitor as close to this pin as possible. MP38900-B: Internal 5V supply. Decouple with a 1μF capacitor as close to this pin as possible.

MPS Proprietary Information. Patent Protected. Unauthorized Photocopy and Duplication Prohibited.
© 2021 MPS. All Rights Reserved.

END OF LIFE

TYPICAL PERFORMANCE CHARACTERISTICS

V_{IN}=12V, V_{OUT} =1.2V, L=1.0μH, T_A=+25°C, unless otherwise noted.

Efficiency
F_{SW} = 600kHz, L = 0.88μH

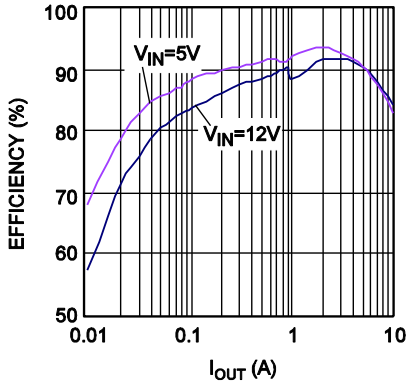

Efficiency
V_{OUT} = 5V, F_{SW} = 600kHz, L = 1.5μH

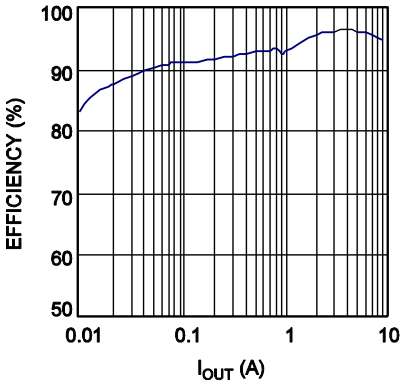

Efficiency
L = 0.88μH for 600kHz and
L = 1μH for 300kHz

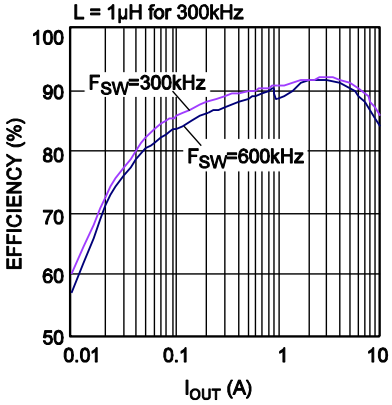

Line Regulation

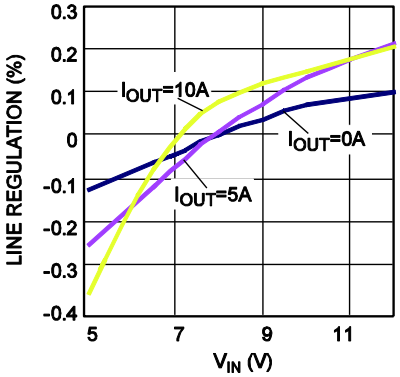

Load Regulation

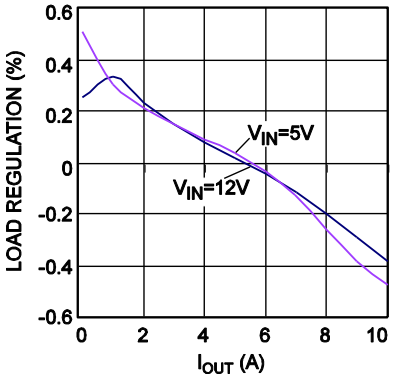

Case Temperature Rise vs. Output Current

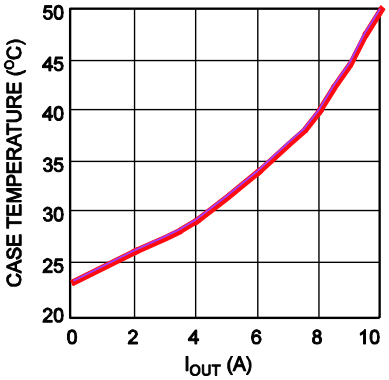

Frequency vs. Temperature
I_{OUT} = 10A

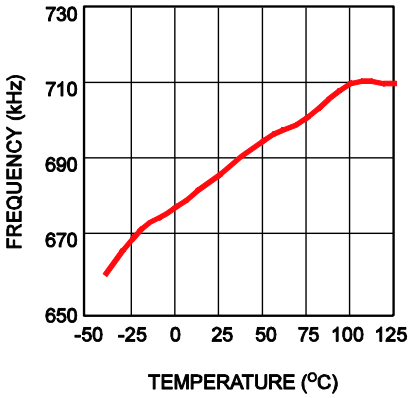

Frequency vs. V_{IN}
I_{OUT} = 10A

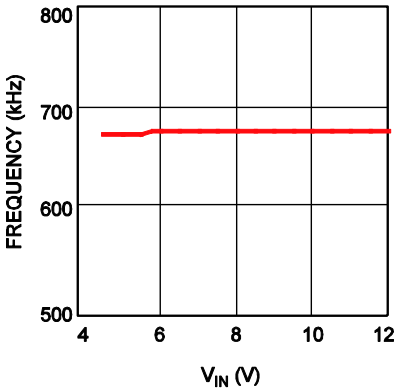

Frequency vs. Load Current

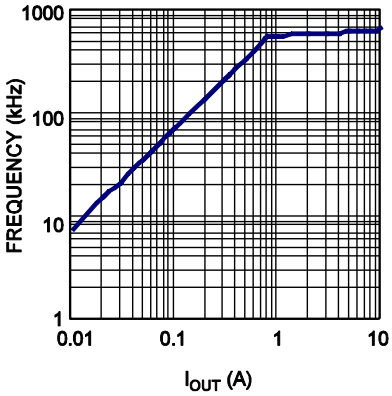

MPS Proprietary Information. Patent Protected. Unauthorized Photocopy and Duplication Prohibited.
© 2021 MPS. All Rights Reserved.

END OF LIFE

TYPICAL PERFORMANCE CHARACTERISTICS *(continued)*

V_{IN}=12V, V_{OUT} =1.2V, L=1.0μH, T_A=+25°C, unless otherwise noted.

Input & Output Voltage Ripple
I_{OUT} = 0A

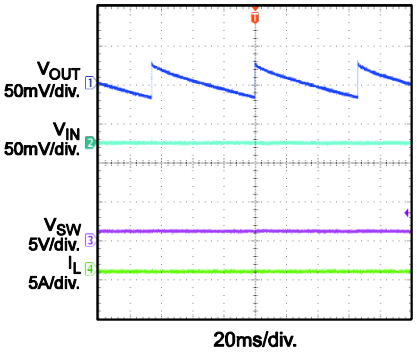

Input & Output Voltage Ripple
I_{OUT} = 0.5A

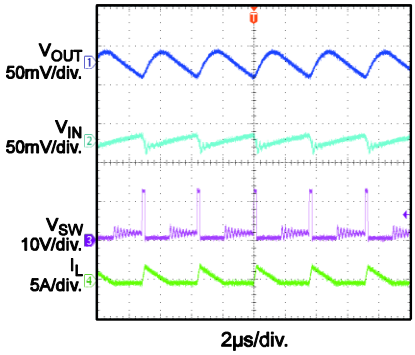

Input & Output Voltage Ripple
I_{OUT} = 10A

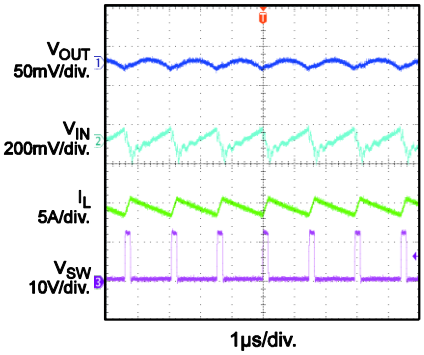

Power Good Through Vin Start-up
I_{OUT} = 10A

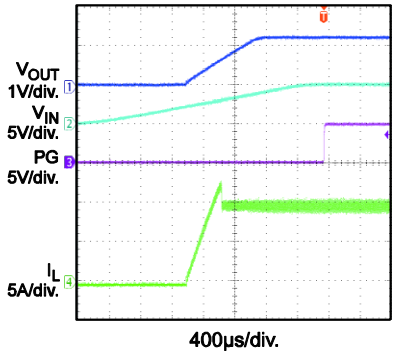

Power Good Through Vin Shut-down
I_{OUT} = 10A

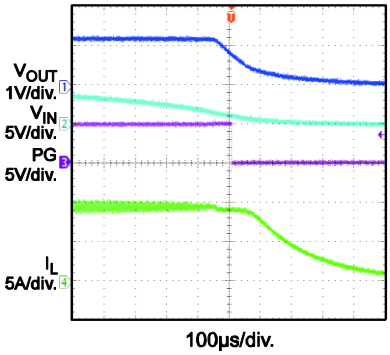

Start-up Through Vin
I_{OUT} = 0A

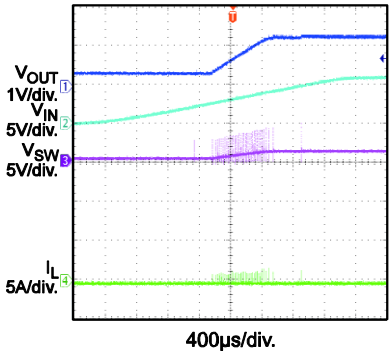

Start-up Through Vin
I_{OUT} = 10A

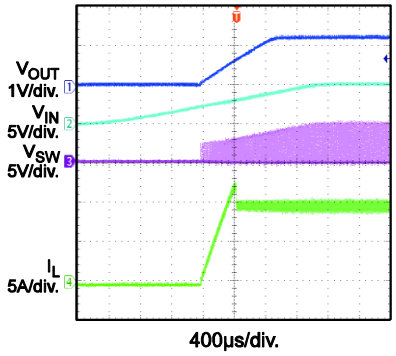

Shut-down Through Vin
I_{OUT} = 0A

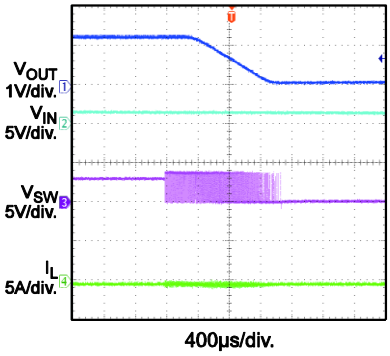

Shut-down Through Vin
I_{OUT} = 10A

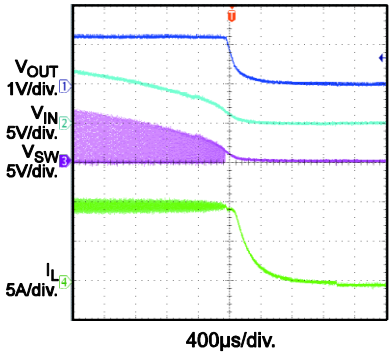

MPS Proprietary Information. Patent Protected. Unauthorized Photocopy and Duplication Prohibited.
© 2021 MPS. All Rights Reserved.

END OF LIFE

TYPICAL PERFORMANCE CHARACTERISTICS *(continued)*

V_{IN}=12V, V_{OUT} =1.2V, L=1.0μH, T_A=+25°C, unless otherwise noted.

Start-up Through EN
I_{OUT} = 0A

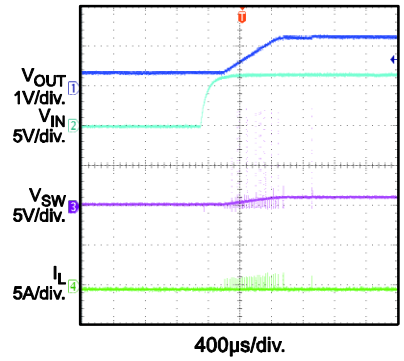

Start-up Through EN
I_{OUT} = 10A

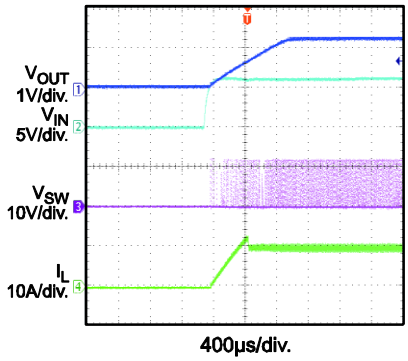

Shut-down Through EN
I_{OUT} = 0A, MP38900

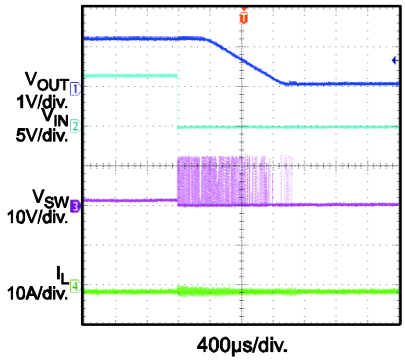

Shut-down Through EN
I_{OUT} = 10A, MP38900

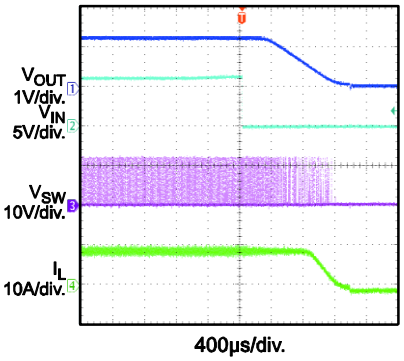

Short Circuit Protection
MP38900

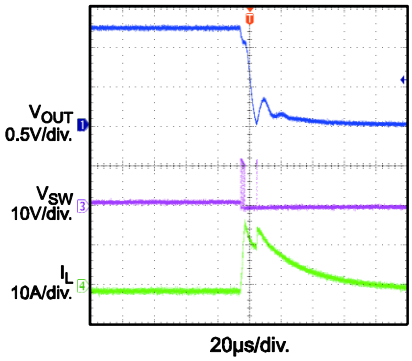

OCP Protection
MP38900

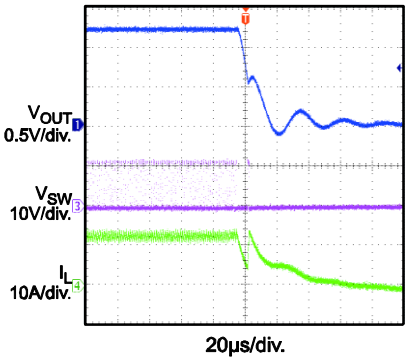

Transient

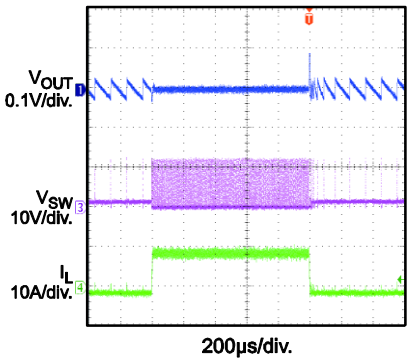

MPS Proprietary Information. Patent Protected. Unauthorized Photocopy and Duplication Prohibited.
© 2021 MPS. All Rights Reserved.

END OF LIFE

TYPICAL PERFORMANCE CHARACTERISTICS *(continued)*

V_{IN}=12V, V_{OUT} =1.2V, L=1.0µH, T_A=+25°C, unless otherwise noted.

Shut-down Through EN
I_{OUT} = 0A, MP38900-B

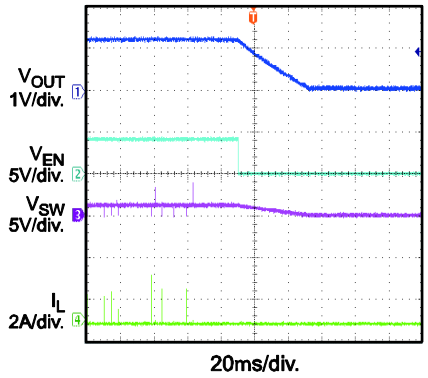

Shut-down Through EN
I_{OUT} = 10A,MP38900-B

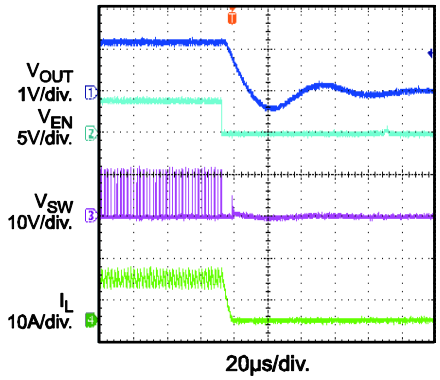

OCP Protection
MP38900-B

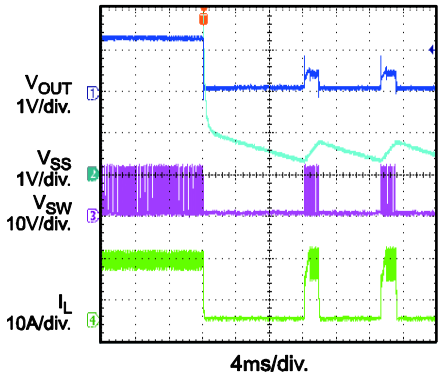

Short Circuit Protection Entry
MP38900-B

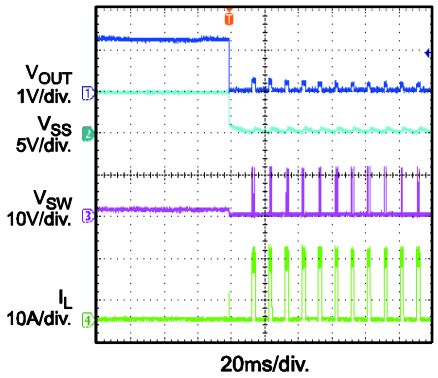

Short Circuit Protection Steady State
MP38900-B

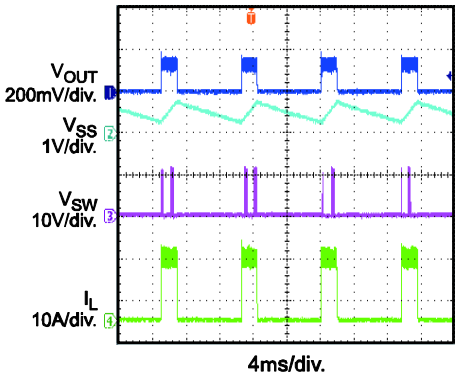

Short Circuit Protection Recovery
MP38900-B

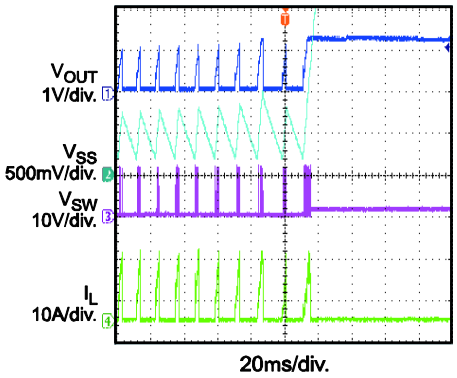

MPS Proprietary Information. Patent Protected. Unauthorized Photocopy and Duplication Prohibited.
© 2021 MPS. All Rights Reserved.

BLOCK DIAGRAM

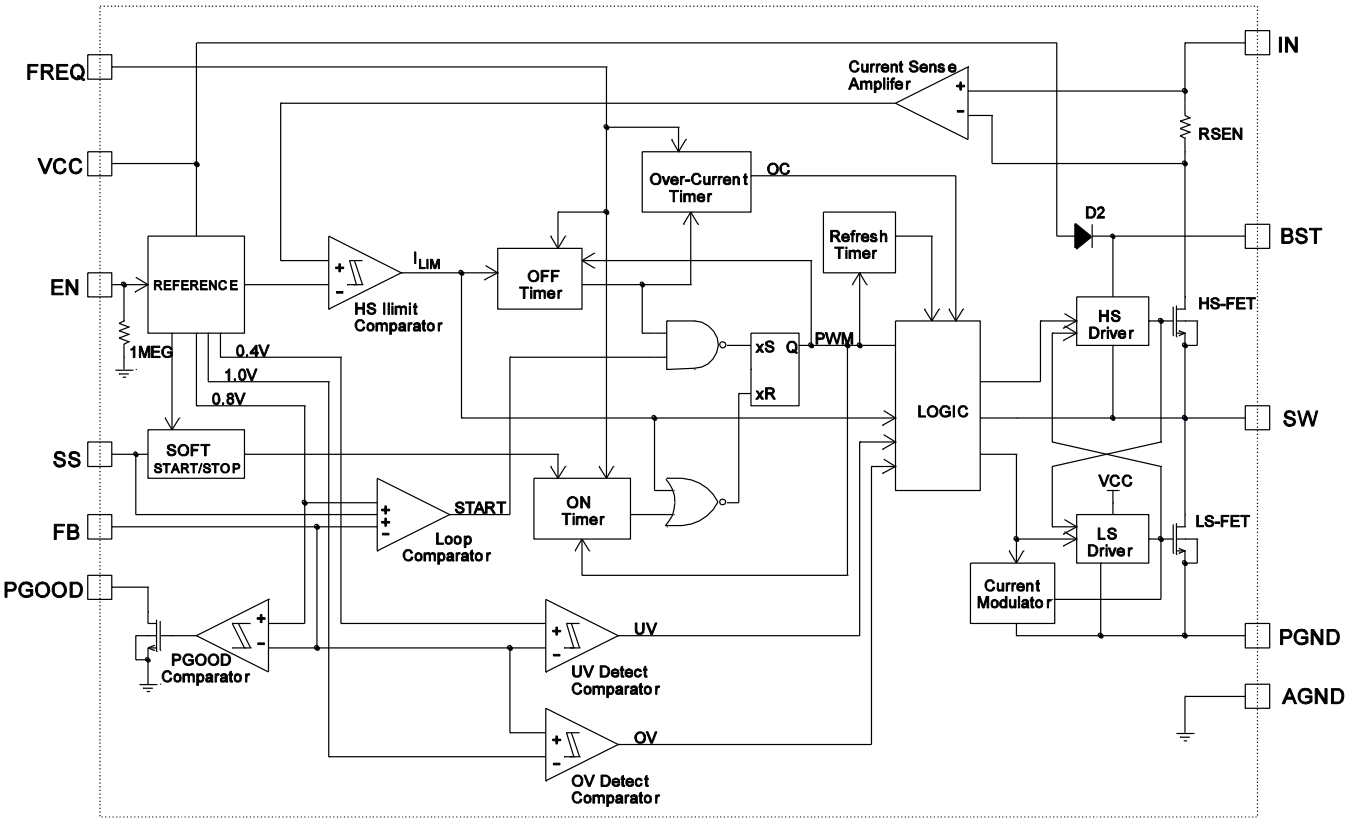

Figure 2: Functional Block Diagram

MPS Proprietary Information. Patent Protected. Unauthorized Photocopy and Duplication Prohibited.
© 2021 MPS. All Rights Reserved.

OPERATION

PWM Operation

The MP38900/MP38900-B is a fully integrated synchronous rectified step-down switch mode converter. Constant-on-time (COT) control is employed to provide fast transient response and easy loop stabilization. At the beginning of each cycle, the high-side MOSFET (HS-FET) is turned on when the feedback voltage (V_{FB}) is below the reference voltage (V_{REF}) which indicates insufficient output voltage. The ON period is determined by the input voltage and the frequency-set resistor as follows:

$$t_{on}(ns) = \frac{12 \times R7(k\Omega)}{V_{IN}(V) - 0.45} + t_{DELAY1}(ns) \quad (1)$$

Where R7 is the resistor to set switching frequency, t_{DELAY1} is the 20ns delay of a comparator in the t_{ON} module.

After the ON period elapses, the HS-FET is turned off, or becomes OFF state. It is turned ON again when V_{FB} drops below V_{REF}. By repeating operation this way, the converter regulates the output voltage. The integrated low-side MOSFET (LS-FET) is turned on when the HS-FET is in its OFF state to minimize the conduction loss. There will be a dead short between input and GND if both HS-FET and LS-FET are turned on at the same time. It's called shoot-through. In order to avoid shoot-through, a dead-time (DT) is internally generated between HS-FET off and LS-FET on, or LS-FET off and HS-FET on.

Heavy-Load Operation

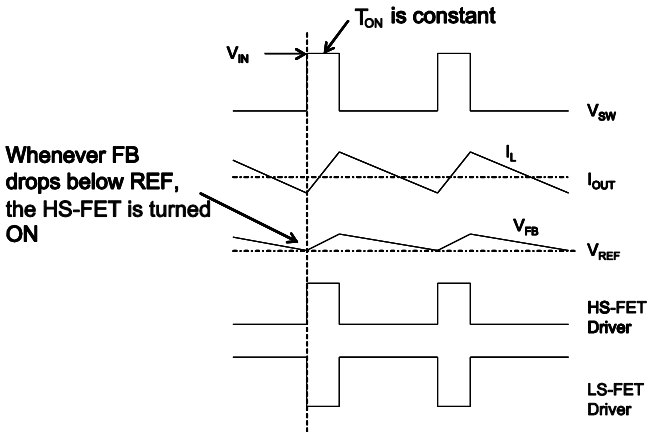

Figure 3: Heavy Load Operation

As Figure 3 shows, when the output current is high, the HS-FET and LS-FET repeat on/off as described above. In this operation, the inductor current will never go to zero. It's called continuous-conduction-mode (CCM) operation. In CCM operation, the switching frequency (f_{SW}) is fairly constant.

Light-Load Operation

When the load current decreases, The MP38900/MP38900-B reduces the switching frequency automatically to maintain high efficiency. The light load operation is shown in Figure 4. The V_{FB} does not reach V_{REF} when the inductor current is approaching zero. As the output current reduces from heavy-load condition, the inductor current also decreases, and eventually comes close to zero. The LS-FET driver turns into tri-state (high Z) whenever the inductor current reaches zero level. A current modulator takes over the control of LS-FET and limits the inductor current to less than 600μA. Hence, the output capacitors discharge slowly to GND through LS-FET as well as R1 and R2. As a result, the efficiency at light load condition is greatly improved. At light load condition, the HS-FET is not turned ON as frequently as at heavy load condition. This is called skip mode.

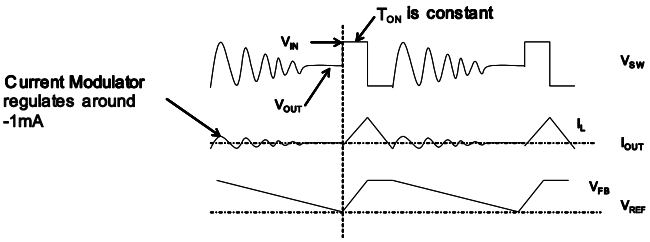

Figure 4: Light Load Operation

As the output current increases from the light load condition, the time period within which the current modulator regulates becomes shorter. The HS-FET is turned on more frequently. Hence, the switching frequency increases correspondingly. The output current reaches the critical level when the current modulator time is zero. The critical level of the output current is determined as follows:

MPS Proprietary Information. Patent Protected. Unauthorized Photocopy and Duplication Prohibited.
© 2021 MPS. All Rights Reserved.

$$I_{OUT} = \frac{(V_{IN} - V_{OUT}) \times V_{OUT}}{2 \times L \times F_{SW} \times V_{IN}} \quad (2)$$

It turns into PWM mode once the output current exceeds the critical level. After that, the switching frequency stays fairly constant over the output current range.

Switching Frequency

Constant-on-time (COT) control is used in the MP38900/MP38900-B and there is no dedicated oscillator in the IC. The input voltage is feed-forwarded to the on-time one-shot timer through the resistor R7. The duty ratio is kept as V_{OUT}/V_{IN}. Hence, the switching frequency is fairly constant over the input voltage range. The switching frequency can be set as follows:

$$f_{SW}(kHz) = \frac{10^6}{\frac{12 \times R7(k\Omega)}{V_{IN}(V) - 0.45} \times \frac{V_{IN}(V)}{V_{OUT}(V)} + t_{DELAY2}(ns)} \quad (3)$$

Where t_{DELAY2} is the comparator delay. It's about 40ns.

Frequency vs. R_{FREQ}

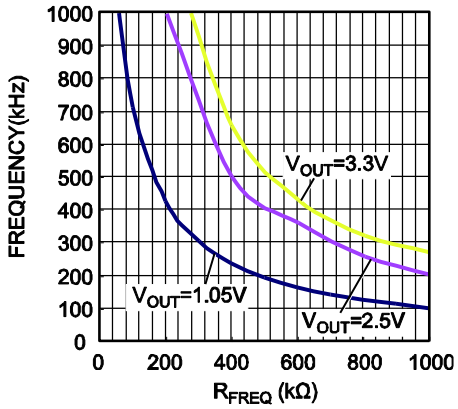

MP38900/MP38900-B is optimized to operate at high switching frequency with high efficiency. High switching frequency makes it possible to utilize small sized LC filter components to save system PCB space.

Jitter and FB Ramp Slope

Figure 5 and Figure 6 show jitter occurring in both PWM mode and skip mode. When there is noise in the V_{FB} downward slope, the ON time of the HS-FET driver deviates from its intended location and produces jitter. It is necessary to understand that there is a relationship between a system's stability and the steepness of the V_{FB} ripple's downward slope. The slope steepness of the V_{FB} ripple dominates in noise immunity. The magnitude of the V_{FB} ripple doesn't affect the noise immunity directly.

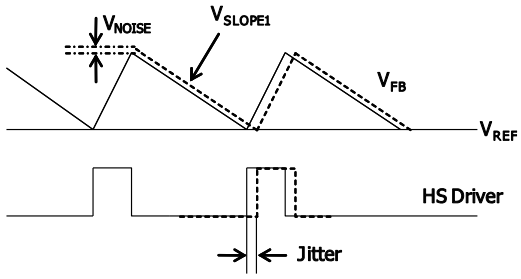

Figure 5: Jitter in PWM Mode

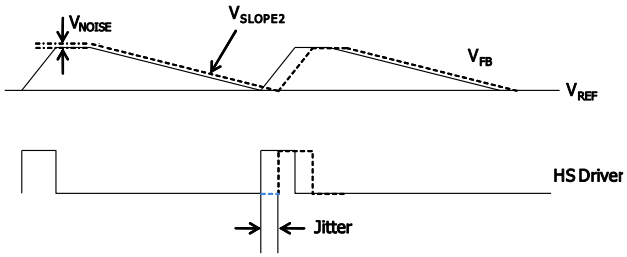

Figure 6: Jitter in Skip Mode

Ramp with Large ESR Cap

In the case of POSCAP or other types of capacitor with larger ESR is applied as output capacitor. The ESR ripple dominates the output ripple, and the slope on the FB is quite ESR related. Figure 7 shows an equivalent circuit in PWM mode with the HS-FET off and without an external ramp circuit. Turn to application information section for design steps with large ESR caps.

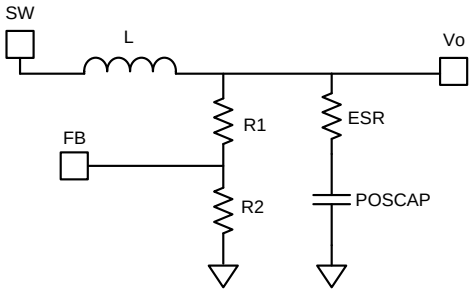

Figure 7: Simplified Circuit in PWM Mode without External Ramp Compensation

To realize the stability when no external ramp is used, usually the ESR value should be chosen as follow:

MPS Proprietary Information. Patent Protected. Unauthorized Photocopy and Duplication Prohibited.
© 2021 MPS. All Rights Reserved.

$$R_{ESR} \geq \frac{\frac{t_{SW}}{0.7 \times \pi} + \frac{t_{ON}}{2}}{C_{OUT}} \quad (4)$$

t_{SW} is the switching period.

When using a large-ESR capacitor on the output, add a ceramic capacitor with a value of 10uF or less to in parallel to minimize the effect of ESL.

Ramp with Small ESR Cap

When the output capacitors are ceramic ones, the ESR ripple is not high enough to stabilize the system, and external ramp compensation is needed. Skip to application information section for design steps with small ESR caps.

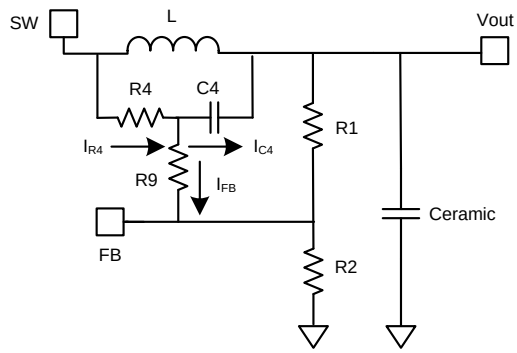

Figure 8: Simplified Circuit in PWM Mode with External Ramp Compensation

Figure 8 shows a simplified external ramp compensation (R4 and C4) for PWM mode, with HS-FET off. Chose R1, R2, R9 and C4 of the external ramp to meet the following condition:

$$\frac{1}{2\pi \times F_{SW} \times C_4} < \frac{1}{5} \times \left(\frac{R_1 \times R_2}{R_1 + R_2} + R_9 \right) \quad (5)$$

Where:

$$I_{R4} = I_{C4} + I_{FB} \approx I_{C4} \quad (6)$$

And the Vramp on the V_{FB} can then be estimated as:

$$V_{RAMP} = \frac{V_{IN} - V_{OUT}}{R_4 \times C_4} \times t_{ON} \times \frac{R_1 // R_2}{R_1 // R_2 + R_9} \quad (7)$$

The downward slope of the V_{FB} ripple then follows

$$V_{SLOPE1} = \frac{-V_{RAMP}}{t_{off}} = \frac{-V_{OUT}}{R_4 \times C_4} \quad (8)$$

As can be seen from equation 8, if there is instability in PWM mode, we can reduce either R4 or C4. If C4 can not be reduced further due to limitation from equation 5, then we can only reduce R4. For a stable PWM operation, the V_{slope1} should be design follow equation 9.

$$-V_{slope1} \geq \frac{\frac{t_{SW}}{0.7 \times \pi} + \frac{t_{ON}}{2} - R_{ESR} C_{OUT}}{2 \times L \times C_{OUT}} V_{OUT} + \frac{Io \times 10^{-3}}{t_{SW} - t_{on}} \quad (9)$$

Where Io is the load current.

In skip mode, the downward slope of the V_{FB} ripple is the same whether the external ramp is used or not. Figure 9 shows the simplified circuit of the skip mode when both the HS-FET and LS-FET are off.

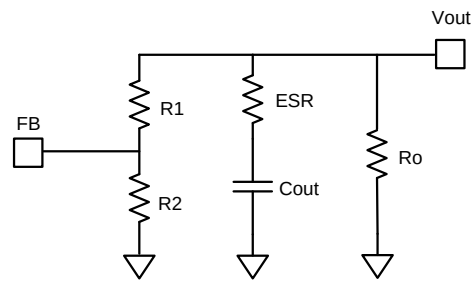

Figure 9: Simplified Circuit in skip Mode

The downward slope of the V_{FB} ripple in skip mode can be determined as follow:

$$V_{SLOPE2} = \frac{-V_{REF}}{((R_1 + R_2) // Ro) \times C_{OUT}} \quad (10)$$

Where Ro is the equivalent load resistor.

As described in Figure 6, V_{SLOPE2} in the skip mode is lower than that is in the PWM mode, so it is reasonable that the jitter in the skip mode is larger. If one wants a system with less jitter during ultra light load condition, the values of the V_{FB} resistors should not be too big, however, that will decrease the light load efficiency.

MPS Proprietary Information. Patent Protected. Unauthorized Photocopy and Duplication Prohibited.
© 2021 MPS. All Rights Reserved.

Bootstrap Charging

The floating power MOSFET driver is powered by an external V_{CC} through D2 as shown in Figure 2. This floating driver has its own UVLO protection. This UVLO's rising threshold is 2.2V with a hysteresis of 150mV. The recommended BST cap C4 is 1μF.

Soft Start/Stop

The MP38900 employ soft start/stop (SS) mechanism to ensure smooth output during power-up and power shutdown. When the EN pin becomes high, an internal current source (8.5μA) charges up the SS CAP. The SS CAP voltage takes over the V_{REF} voltage to the PWM comparator. The output voltage smoothly ramps up with the SS voltage. Once the SS voltage reaches the same level as the REF voltage, it keeps ramping up while REF takes over the PWM comparator. At this point, the soft start finishes and it enters into steady state operation.

When the EN pin becomes low, the SS CAP voltage is discharged through an 8.5μA internal current source. Once the SS voltage reaches REF voltage, it takes over the PWM comparator. The output voltage will decrease smoothly with SS voltage until zero level. The SS CAP value can be determined as follows:

$$C_{SS}(nF) = \frac{t_{SS}(ms) \times I_{SS}(\mu A)}{V_{REF}(V)} \quad (11)$$

If the output capacitors have large capacitance value, it's not recommended to set the SS time too small. A minimal value of 4.7nF should be used if the output capacitance value is larger than 330μF.

MP38900-B has the same soft start mechanism, however, the soft shut-down feature is disabled to support output prebias applications.

Power Good (PGOOD)

The MP38900/MP38900-B has power-good (PGOOD) output. The PGOOD pin is the open drain of a MOSFET. It should be connected to V_{CC} or other voltage source through a resistor (e.g. 100k). After the input voltage is applied, the MOSFET is turned on, so that the PGOOD pin is pulled to GND before SS ready. After FB voltage reaches 90% of REF voltage, the PGOOD pin is pulled high after a delay.

The PGOOD delay time is determined as follows:

MP38900:

$$t_{PGOOD}(ms) = 0.5 \times t_{SS}(ms) + 0.5$$

MP38900-B:

$$t_{PGOOD}(ms) = 1.5ms \quad (12)$$

When the FB voltage drops to 85% of the REF voltage, the PGOOD pin will be pulled low.

Over-Current Protection (OCP) and Short-Circuit Protection (SCP)

The MP38900/MP38900-B has cycle-by-cycle over-current limit control. The inductor current is monitored during the ON state. Once it detects that the inductor current is higher than the current limit, the HS-FET is turned off. At the same time, the OCP timer is started. The OCP timer is set as 40μs. If in the following 40μs, the current limit is hit for every cycle, then it'll trigger OCP.

When the current limit is hit and the FB voltage is lower than 50% of the REF voltage, the device considers this as a dead short on the output and triggers OCP immediately. This is short circuit protection (SCP).

Under OCP/SCP condition, MP38900 will latch off. The converter needs power cycle to restart. MP38900-B will enter hiccup mode, and restart by itself once the OCP/SCP condition is removed.

Over/Under-voltage Protection (OVP/UVP)

The MP38900/MP38900-B monitors the output voltage through a resistor divider feedback (FB) voltage to detect overvoltage and undervoltage on the output. When the FB voltage is higher than 125% of the REF voltage, it'll trigger OVP. Once it triggers OVP, the LS-FET is always on while the HS-FET is always off. It needs power cycle to power up again. When the FB voltage is below 70% of the REF voltage (0.815V), UVP will be triggered. Usually, UVP accompanies a hit in current limit and this results in SCP.

UVLO protection

The MP38900/MP38900-B has under-voltage lock-out protection (UVLO). When V_{CC} is higher than the UVLO rising threshold voltage, the MP38900/MP38900-B will be powered up. It shuts off when V_{CC} is lower than the UVLO falling threshold voltage. This is non-latch protection.

MPS Proprietary Information. Patent Protected. Unauthorized Photocopy and Duplication Prohibited.
© 2021 MPS. All Rights Reserved.

Thermal Shutdown

Thermal shutdown is employed in the MP38900/ MP38900-B. The junction temperature of the IC is internally monitored. If the junction temperature exceeds the threshold value (typically 150ºC), the converter shuts off. This is non-latch protection. There is about 25ºC hysteresis. Once the junction temperature drops to around 125ºC, it initiates a soft start.

MPS Proprietary Information. Patent Protected. Unauthorized Photocopy and Duplication Prohibited.
© 2021 MPS. All Rights Reserved.

APPLICATION INFORMATION

Setting the Output Voltage-Large ESR Caps

For applications that electrolytic capacitor or POS capacitor with a controlled output of ESR is set as output capacitors. The output voltage is set by feedback resistors R1 and R2. As Figure 10 shows.

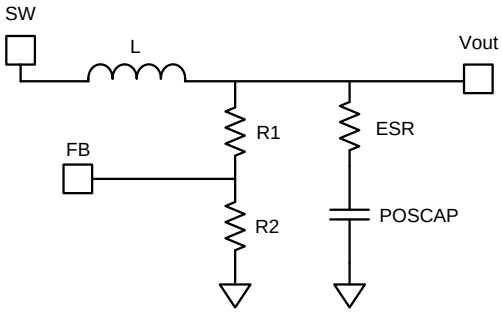

Figure10: Simplified Circuit of POS Capacitor

First, choose a value for R2. R2 should be chosen reasonably, a small R2 will lead to considerable quiescent current loss while too large R2 makes the FB noise sensitive. It is recommended to choose a value within 5kΩ-50kΩ for R2, using a comparatively larger R2 when Vout is low, etc.,1.05V, and a smaller R2 when Vout is high. Then R1 is determined as follow with the output ripple considered:

$$R_1 = \frac{V_{OUT} - \frac{1}{2}\Delta V_{OUT} - V_{REF}}{V_{REF}} \cdot R_2 \qquad (13)$$

ΔV_{OUT} is the output ripple determined by equation 21.

Setting the Output Voltage-Small ESR Caps

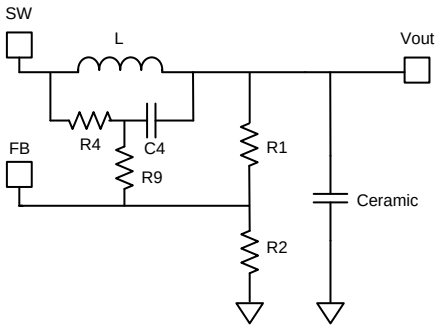

Figure11: Simplified Circuit of Ceramic Capacitor

When low ESR ceramic capacitor is used in the output, an external voltage ramp should be added to FB through resistor R4 and capacitor C4.The output voltage is influenced by ramp voltage V_{RAMP} besides R divider as shown in Figure 11. The V_{RAMP} can be calculated as shown in equation 7. R2 should be chosen reasonably, a small R2 will lead to considerable quiescent current loss while too large R2 makes the FB noise sensitive. It is recommended to choose a value within 5kΩ-50kΩ for R2, using a comparatively larger R2 when Vo is low, etc.,1.05V, and a smaller R2 when Vo is high. And the value of R1 then is determined as follow:

$$R_1 = \frac{R_2}{\frac{V_{FB(AVG)}}{(V_{OUT} - V_{FB(AVG)})} - \frac{R_2}{R_4 + R_9}} \qquad (14)$$

The $V_{FB(AVG)}$ is the average value on the FB, $V_{FB(AVG)}$ varies with the Vin, Vo, and load condition, etc., its value on the skip mode would be lower than that of the PWM mode, which means the load regulation is strictly related to the $V_{FB(AVG)}$. Also the line regulation is related to the $V_{FB(AVG)}$. If one wants to gets a better load or line regulation, a lower Vramp is suggested, as long as the criterion shown in equation 8 can be met.

For PWM operation, $V_{FB(AVG)}$ value can be deduced from the equation below.

$$V_{FB(AVG)} = V_{REF} + \frac{1}{2} V_{RAMP} \times \frac{R_1 // R_2}{R_1 // R_2 + R_9} \qquad (15)$$

Usually, R9 is set to 0Ω, and it can also be set following equation 16 for a better noise immunity. It should also set to be 5 timers smaller than R1//R2 to minimize its influence on Vramp.

$$R_9 = \frac{1}{2\pi \times C_4 \times 2F_{SW}} \qquad (16)$$

Using equation 14 to calculate the R1 can be complicated. To simplify the calculation, a DC-blocking capacitor Cdc can be added to filter the DC influence from R4 and R9. Figure 12 shows a simplified circuit with external ramp compensation and a DC-blocking capacitor. With this capacitor, R1 can easily be obtained by using the simplified equation for PWM mode operation:

$$R_1 = \frac{(V_{OUT} - V_{REF} - \frac{1}{2} V_{RAMP})}{V_{REF} + \frac{1}{2} V_{RAMP}} R_2 \qquad (17)$$

Cdc is suggested to be at least 10 times larger than C4 for better DC blocking performance, and

MPS Proprietary Information. Patent Protected. Unauthorized Photocopy and Duplication Prohibited.
© 2021 MPS. All Rights Reserved.

should also not larger than 0.47uF considering start up performance. In case one wants to use larger Cdc for a better FB noise immunity, combined with reduced R1 and R2 to limit the Cdc in a reasonable value without affecting the system start up. Be noted that even when the Cdc is applied, the load and line regulation are still Vramp related.

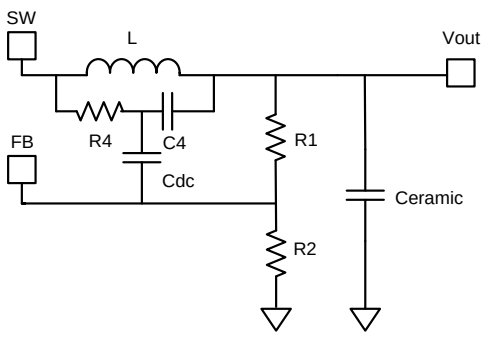

Figure12: Simplified Circuit of Ceramic Capacitor with DC blocking capacitor

Input Capacitor

The input current to the step-down converter is discontinuous. Therefore, a capacitor is required to supply the AC current to the step-down converter while maintaining the DC input voltage. Ceramic capacitors are recommended for best performance. In the layout, it's recommended to put the input capacitors as close to the IN pin as possible.

The capacitance varies significantly over temperature. Capacitors with X5R and X7R ceramic dielectrics are recommended because they are fairly stable over temperature.

The capacitors must also have a ripple current rating greater than the maximum input ripple current of the converter. The input ripple current can be estimated as follows:

$$I_{CIN} = I_{OUT} \times \sqrt{\frac{V_{OUT}}{V_{IN}} \times (1 - \frac{V_{OUT}}{V_{IN}})} \quad (18)$$

The worst-case condition occurs at:

$$I_{CIN} = \frac{I_{OUT}}{2} \quad (19)$$

For simplification, choose the input capacitor whose RMS current rating is greater than half of the maximum load current.

The input capacitance value determines the input voltage ripple of the converter. If there is input voltage ripple requirement in the system design, choose the input capacitor that meets the specification.

The input voltage ripple can be estimated as follows:

$$\Delta V_{IN} = \frac{I_{OUT}}{F_{SW} \times C_{IN}} \times \frac{V_{OUT}}{V_{IN}} \times (1 - \frac{V_{OUT}}{V_{IN}}) \quad (20)$$

The worst-case condition occurs at $V_{IN} = 2V_{OUT}$, where:

$$\Delta V_{IN} = \frac{1}{4} \times \frac{I_{OUT}}{F_{SW} \times C_{IN}} \quad (21)$$

Output Capacitor

The output capacitor is required to maintain the DC output voltage. Ceramic or POSCAP capacitors are recommended. The output voltage ripple can be estimated as:

$$\Delta V_{OUT} = \frac{V_{OUT}}{F_{SW} \times L} \times (1 - \frac{V_{OUT}}{V_{IN}}) \times (R_{ESR} + \frac{1}{8 \times F_{SW} \times C_{OUT}}) \quad (22)$$

Where R_{ESR} is the equivalent series resistance (ESR) of the output capacitor.

In the case of ceramic capacitors, the impedance at the switching frequency is dominated by the capacitance. The output voltage ripple is mainly caused by the capacitance. For simplification, the output voltage ripple can be estimated as:

$$\Delta V_{OUT} = \frac{V_{OUT}}{8 \times F_{SW}^{2} \times L \times C_{OUT}} \times (1 - \frac{V_{OUT}}{V_{IN}}) \quad (23)$$

The output voltage ripple caused by ESR is very small. Therefore, an external ramp is needed to stabilize the system. The external ramp can be generated through resistor R4 and capacitor C4 using the following equation 5, 8 and 9.

In the case of POSCAP capacitors, the ESR dominates the impedance at the switching frequency. The ramp voltage generated from the ESR is high enough to stabilize the system. Therefore, an external ramp is not needed. A minimum ESR value of 12mΩ is required to ensure stable operation of the converter. For simplification, the output ripple can be approximated as:

$$\Delta V_{OUT} = \frac{V_{OUT}}{F_{SW} \times L} \times (1 - \frac{V_{OUT}}{V_{IN}}) \times R_{ESR} \quad (24)$$

MPS Proprietary Information. Patent Protected. Unauthorized Photocopy and Duplication Prohibited.
© 2021 MPS. All Rights Reserved.

Inductor

The inductor is required to supply constant current to the output load while being driven by the switching input voltage. A larger value inductor will result in less ripple current that will result in lower output ripple voltage. However, a larger value inductor will have a larger physical size, higher series resistance, and/or lower saturation current. A good rule for determining the inductor value is to allow the peak-to-peak ripple current in the inductor to be approximately 30~40% of the maximum switch current limit. Also, make sure that the peak inductor current is below the maximum switch current limit. The inductance value can be calculated as:

$$L = \frac{V_{OUT}}{F_{SW} \times \Delta I_L} \times (1 - \frac{V_{OUT}}{V_{IN}}) \quad (25)$$

Where ΔI_L is the peak-to-peak inductor ripple current.

Choose an inductor that will not saturate under the maximum inductor peak current. The peak inductor current can be calculated as:

$$I_{LP} = I_{OUT} + \frac{V_{OUT}}{2F_{SW} \times L} \times (1 - \frac{V_{OUT}}{V_{IN}}) \quad (26)$$

The inductors listed in Table 1 are highly recommended for the high efficiency they can provide.

Table 1: Inductor Selection Guide

Part Number	Manufacturer	Inductance (μH)	DCR (mΩ)	Current Rating (A)	Dimensions L x W x H (mm^3)	Switching Frequency (kHz)
PCMC-135T-R68MF	Cyntec	0.68	1.7	34	13.5 x 12.6 x 4.8	600
FDA1254-1R0M	TOKO	1	2	25.2	13.5 x 12.6 x 5.4	300~600
FDA1254-1R2M	TOKO	1.2	2.05	20.2	13.5 x 12.6 x 5.4	300~600

MPS Proprietary Information. Patent Protected. Unauthorized Photocopy and Duplication Prohibited.
© 2021 MPS. All Rights Reserved.

Typical Design Parameter Tables

The following tables include recommended component values for typical output voltages (1.05V, 1.2V, 1.8V, 2.5V, 3.3V) and switching frequencies (300kHz, and 600kHz). Refer to Tables 2-3 for design cases without external ramp compensation and Tables 4-5 for design cases with external ramp compensation. External ramp is not needed when high-ESR capacitors, such as electrolytic or POSCAPs are used. External ramp is needed when low-ESR capacitors, such as ceramic capacitors are used. For cases not listed in this datasheet, a calculator in excel spreadsheet can also be requested through a local sales representative to assist with the calculation.

Table 2: 300kHz, 12V_{IN}, w/o External Ramp, C_{OUT}=220µF, 15mΩ

V_{OUT} (V)	L (µH)	R1 (kΩ)	R2 (kΩ)	R7 (kΩ)
1.05	1	5.49	20	324
1.2	1	9.1	20	357
1.8	2.0	12	10	475
2.5	2.0	20.5	10	680
3.3	2.0	30.1	10	866

Table 3: 600kHz, 12V_{IN}, w/o External Ramp, C_{OUT} =220µF, 15mΩ

V_{OUT} (V)	L (µH)	R1 (kΩ)	R2 (kΩ)	R7 (kΩ)
1.05	0.68	5.6	20	147
1.2	0.68	9.1	20	165
1.8	1.2	12.1	10	240
2.5	1.2	21	10	330
3.3	1.2	30.9	10	442

Table 4: 300kHz, 12V_{IN}, with External Ramp

V_{OUT} (V)	L (µH)	R1 (kΩ)	R2 (kΩ)	R4 (kΩ)	C4 (pF)	R7 (kΩ)
1.05	1	5.11	20	300	220	324
1.2	1	8.87	20	300	220	357
1.8	2.0	12	10	590	220	475
2.5	2.0	20.5	10	590	220	680
3.3	2.0	30.9	10	590	220	866

Table 5: 600kHz, 12V_{IN}, with External Ramp

V_{OUT} (V)	L (µH)	R1 (kΩ)	R2 (kΩ)	R4 (kΩ)	C4 (pF)	R7 (kΩ)
1.05	0.68	5.6	20	205	180	154
1.2	0.68	9.1	20	205	180	169
1.8	1.2	12.1	10	300	180	240
2.5	1.2	21.5	10	300	180	330
3.3	1.2	33	10	300	180	453

MPS Proprietary Information. Patent Protected. Unauthorized Photocopy and Duplication Prohibited.
© 2021 MPS. All Rights Reserved.

END OF LIFE

TYPICAL APPLICATION

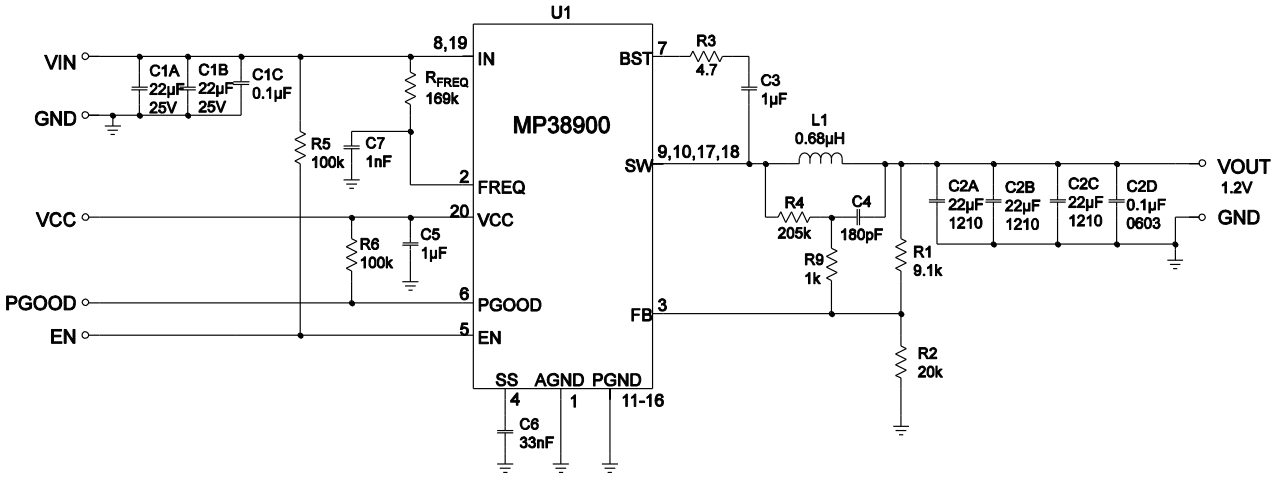

Figure 13 : Typical Application Circuit with Low ESR Ceramic Capacitor

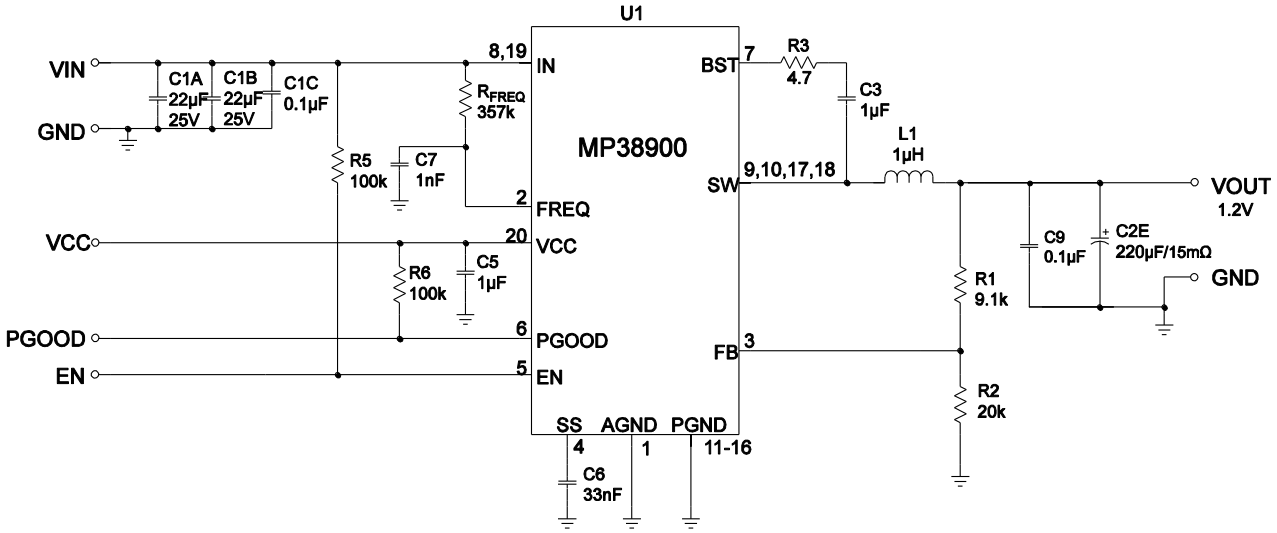

Figure 14 : Typical Application Circuit with No External Ramp

MPS Proprietary Information. Patent Protected. Unauthorized Photocopy and Duplication Prohibited.
© 2021 MPS. All Rights Reserved.

END OF LIFE

LAYOUT RECOMMENDATION

1. The high current paths (GND, IN, and SW) should be placed very close to the device with short, direct and wide traces.
2. Put the input capacitors as close to the IN and GND pins as possible.(<2mm)
3. Put the decoupling capacitor as close to the V_{CC} and GND pins as possible.
4. Keep the switching node SW short and away from the feedback network.
5. The external feedback resistors should be placed next to the FB pin. Make sure that there is no via on the FB trace.
6. Keep the BST voltage path (BST, C_{BST}, and SW) as short as possible.
7. Keep the bottom IN and SW pads connected with large copper to achieve better thermal performance.
8. Four-layer layout is strongly recommended to achieve better thermal performance.

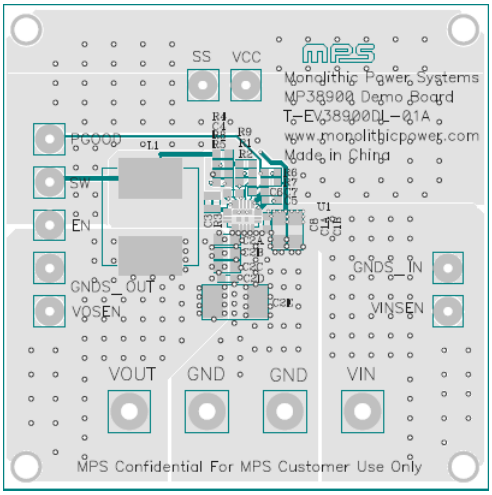

Top Layer

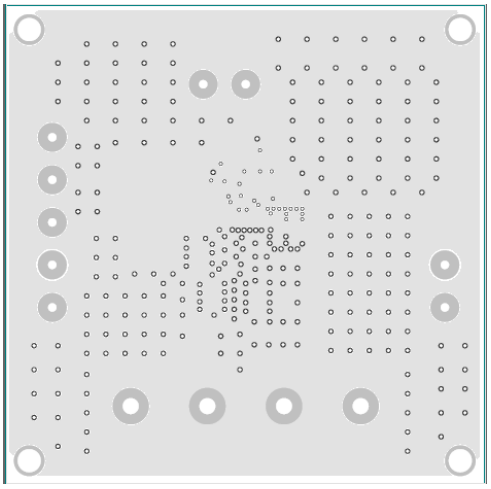

Inner1 Layer

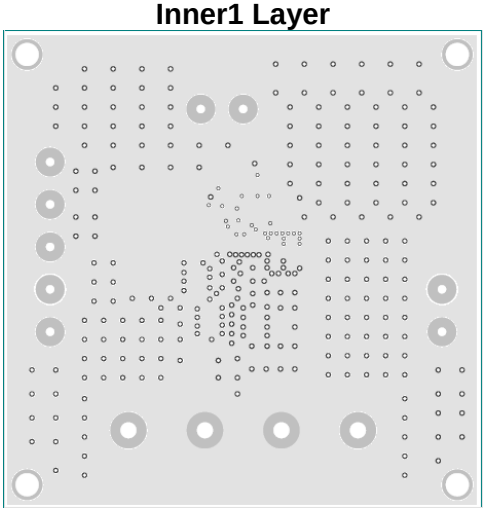

Inner2 Layer

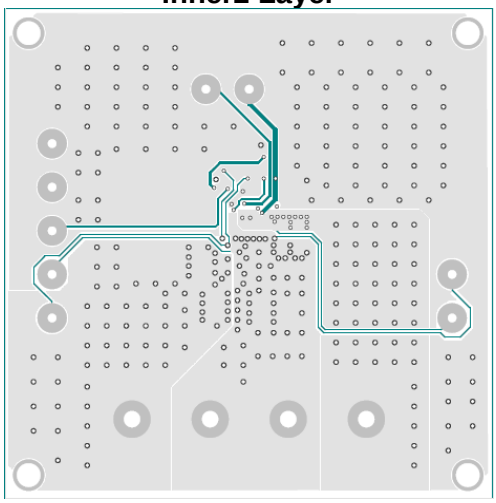

Bottom Layer

Figure 15: PCB Layout

MPS Proprietary Information. Patent Protected. Unauthorized Photocopy and Duplication Prohibited.
© 2021 MPS. All Rights Reserved.

END OF LIFE

PACKAGE INFORMATION

QFN20(3x4mm)

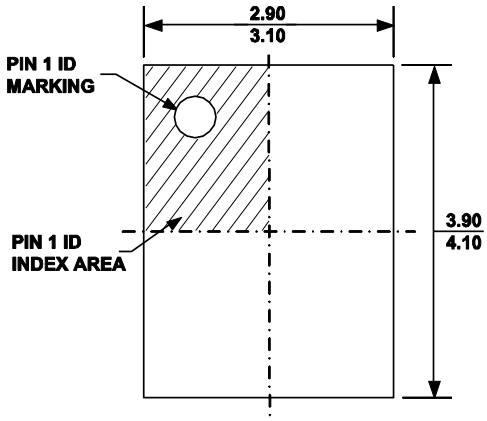

TOP VIEW

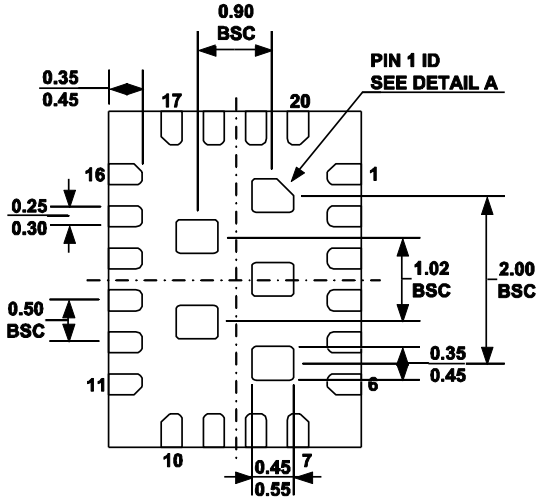

BOTTOM VIEW

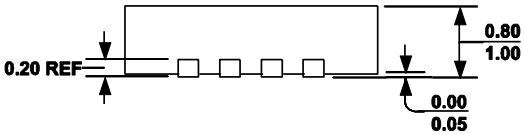

SIDE VIEW

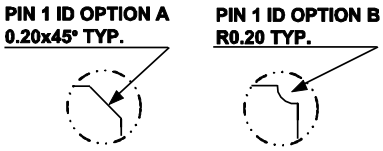

DETAIL A

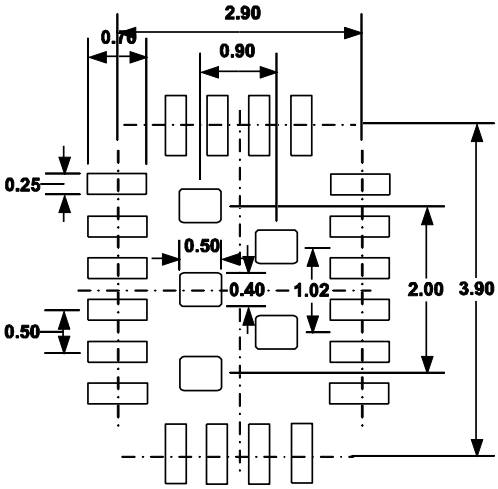

RECOMMENDED LAND PATTERN

NOTE:

1) ALL DIMENSIONS ARE IN MILLIMETERS.
2) EXPOSED PADDLE SIZE DOES NOT INCLUDE MOLD FLASH.
3) LEAD COPLANARITY SHALL BE 0.10 MILLIMETER MAX.
4) JEDEC REFERENCE IS MO-220.
5) DRAWING IS NOT TO SCALE.

NOTICE: The information in this document is subject to change without notice. Users should warrant and guarantee that third party Intellectual Property rights are not infringed upon when integrating MPS products into any application. MPS will not assume any legal responsibility for any said applications.

© 2021 MPS. All Rights Reserved.