NB671LB

24V, High Current Synchronous Step-down Converter

END OF LIFE

DESCRIPTION

The NB671LB is the low quiescent current version of NB671. It is a fully integrated high frequency synchronous rectified step-down switch mode converter, which offers very compact solutions to achieve 6A continuous output current and 9A peak current over a wide input supply range with excellent load and line regulation. The NB671LB operates at high efficiency over a wide output current load range.

Constant-On-Time (COT) control mode provides fast transient response and eases loop stabilization.

Under voltage lockout is internally set as 4.2 V, An open drain power good signal indicates the output is within its nominal voltage range.

Full protection features include OCP, OVP, and thermal shut down.

The converter requires minimum number of external components and is available in QFN16 (3mmx3mm) package.

The NB671LB is pin-to-pin compatible with NB671 with a NC pin changed to LP#, which is used to receive the power state command from the system.

FEATURES

- Wide 4.5V to 24V Operating Input Range
- 6A Continuous Output Current
- 9A Peak Output Current
- 120μA Quiescent Current
- Low R_{DS}(ON) Internal Power MOSFETs
- Proprietary Switching Loss Reduction Technique
- 1% Reference Voltage
- Internal Soft Start
- Output Discharge
- 500kHZ Switching Frequency
- OCP, OVP, UVP Protection and Thermal Shutdown
- Latch off Reset via EN or Power Cycle.
- Output Adjustable from 0.604V to 5.5V
- Support 5V Output from 5.5V Input

APPLICATIONS

- Laptop Computer
- Tablet PC
- Networking Systems
- Personal Video Recorders
- Flat Panel Television and Monitors
- Distributed Power Systems

All MPS parts are lead-free and adhere to the RoHS directive. For MPS green status, please visit MPS website under Products, Quality Assurance page.

"MPS" and "The Future of Analog IC Technology" are registered trademarks of Monolithic Power Systems, Inc.

TYPICAL APPLICATION

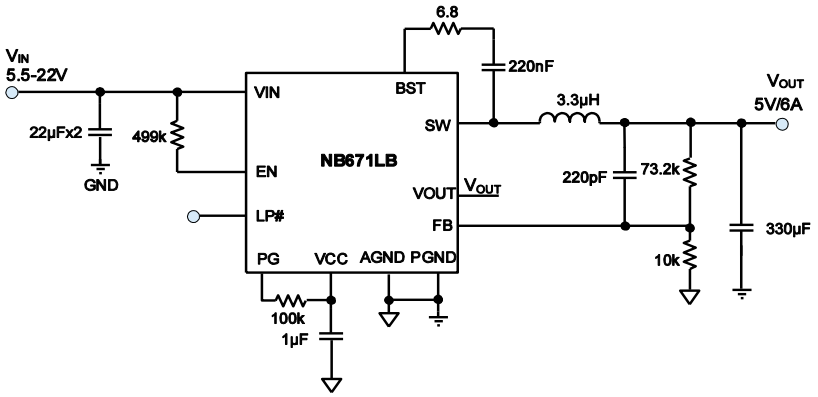

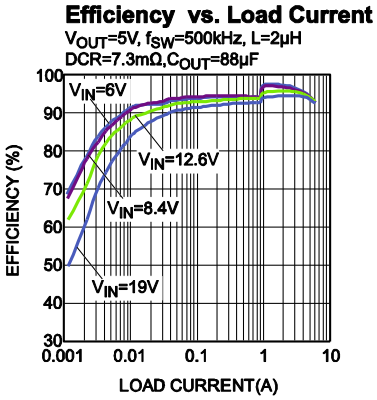

MPS Proprietary Information. Patent Protected. Unauthorized Photocopy and Duplication Prohibited.
© 2026 MPS. All Rights Reserved.

ORDERING INFORMATION

Part Number*	Package	Top Marking
NB671LBGQ	QFN-16 (3mm x 3mm)	*See Below*

* For Tape & Reel, add suffix –Z (e.g. NB671LBGQ–Z)

TOP MARKING

AMCY
LLL

AMC: product code of NB671LBGQ;
Y: year code;
LLL: lot number;

PACKAGE REFERENCE

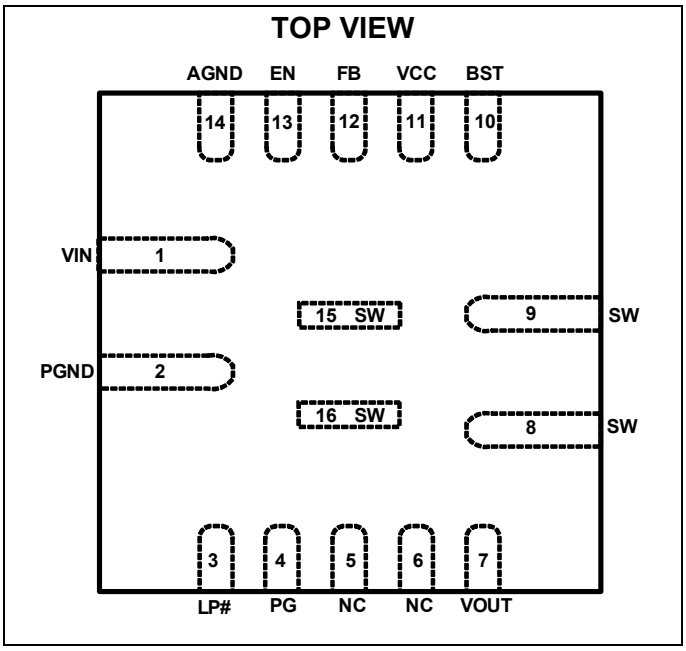

MPS Proprietary Information. Patent Protected. Unauthorized Photocopy and Duplication Prohibited.
© 2026 MPS. All Rights Reserved.

ABSOLUTE MAXIMUM RATINGS (1)

Supply Voltage V_{IN} 24V
V_{SW} .....-0.3V to 24.3V
V_{SW} (30ns).....-3V to V_{IN}+4V
V_{BST} ..... V_{SW} + 6V
V_{EN} 12V
Enable Current I_{EN}(2)..... 2.5mA
All Other Pins .....–0.3V to +5.5V
Continuous Power Dissipation (T_A=+25°)(3)
QFN-16
(3mmx3mm)...……..……1.8W
Junction Temperature .....150°C
Lead Temperature .....260°C
Storage Temperature..... -65°C to +150°C

Recommended Operating Conditions (4)

Supply Voltage V_{IN} .....4.5V to 22V
Output Voltage V_{OUT}.....0.604V to 5.5V
Enable Current I_{EN}..... 1mA
Operating Junction Temp. (T_J). -40°C to +125°C

Thermal Resistance (5) θ_{JA} θ_{JC}

QFN-16 (3mmx3mm) .....70 ..... 15 ... °C/W

Notes:

1) Exceeding these ratings may damage the device.
2) Refer to Page 19 of Configuring the EN Control.
3) The maximum allowable power dissipation is a function of the maximum junction temperature T_J(MAX), the junction-to-ambient thermal resistance θ_{JA}, and the ambient temperature T_A. The maximum allowable continuous power dissipation at any ambient temperature is calculated by $P_D(MAX)=(T_J(MAX)-T_A)/\theta_{JA}$. Exceeding the maximum allowable power dissipation will cause excessive die temperature, and the regulator will go into thermal shutdown. Internal thermal shutdown circuitry protects the device from permanent damage.
4) The device is not guaranteed to function outside of its operating conditions.
5) Measured on JESD51-7, 4-layer PCB.

MPS Proprietary Information. Patent Protected. Unauthorized Photocopy and Duplication Prohibited.
© 2026 MPS. All Rights Reserved.

ELECTRICAL CHARACTERISTICS

V_{IN} = 12V, T_J = 25°C, LP=High, unless otherwise noted.

Parameters	Symbol	Condition	Min	Typ	Max	Units
Supply Current						
Supply Current (Shutdown)	I_{IN}	V_{EN} = 0V		0	1	μA
Supply Current (Quiescent)	I_{IN}	V_{EN} = 2V, V_{FB} = 0.65V, $V_{LP\#}$=0V		120		μA
Supply Current (Quiescent)	I_{IN}	V_{EN} = 2V, V_{FB} = 0.65V, $V_{LP\#}$=1V		240		μA
MOSFET						
High-side Switch On Resistance	HS_{RDS-ON}			30		mΩ
Low-side Switch On Resistance	LS_{RDS-ON}			15		mΩ
Switch Leakage	SW_{LKG}	V_{EN} = 0V, V_{SW} = 0V or 12V		0	1	μA
Current Limit						
Low-side Valley Current Limit	I_{LIMIT}		7.8	8.5	9.5	A
Switching frequency and minimum off timer						
Switching frequency	F_S	V_{IN}>7V, V_{OUT}=5V	400	500	600	kHz
		6V<V_{IN}≤7V, V_{OUT}=5V		290		
		V_{IN}≤6V, V_{OUT}=5V		140		
Minimum Off Time(6)	T_{OFF}			300		ns
Maximum Duty Cycle	D_{MAX}	V_{IN}=5.5V, V_{OUT}=5V		95.5%		
Over-voltage and Under-voltage Protection						
OVP Threshold	V_{OVP}		125%	130%	135%	V_{REF}
UVP Threshold	V_{UVP}		55%	60%	65%	V_{REF}
Reference And Soft Start						
Reference Voltage	V_{REF}		598	604	610	mV
Feedback Current	I_{FB}	V_{FB} = 0.604V		10	50	nA
Soft Start Time	T_{SS}			1.8		ms
Enable And UVLO						
Enable Input Low Voltage	VIL_{EN}		1.15	1.25	1.4	V
Enable Hysteresis	V_{EN-HYS}			100		mV
Enable Input Current	I_{EN}	V_{EN} = 2V		5		μA
		V_{EN} = 0V		0		
VCC Under Voltage Lockout Threshold Rising	VCC_{Vth}			4.15	4.3	V
VCC Under Voltage Lockout Threshold Hysteresis	VCC_{HYS}		150	380		mV

MPS Proprietary Information. Patent Protected. Unauthorized Photocopy and Duplication Prohibited.
© 2026 MPS. All Rights Reserved.

ELECTRICAL CHARACTERISTICS *(continued)*

V_{IN} = 12V, T_J = 25°C, unless otherwise noted.

Parameters	Symbol	Condition	Min	Typ	Max	Units
LP#						
LP# Input High Voltage	$V_{LP\#_H}$		0.67			V
LP# Input Low Voltage	$V_{LP\#_L}$				0.45	V
LP# Input current	$I_{LP\#}$	$V_{LP\#}$=3.3V			1	μA
VCC Regulator						
VCC Regulator	V_{CC}		4.8	5.2	5.5	V
VCC Load Regulation		Icc=5mA		2		%
Power Good						
FB Rising (Good)	PG_{Vth-Hi}			95		%V_{REF}
FB Falling (Fault)	PG_{Vth-Lo}			85		
FB Rising (Fault)	PG_{Vth-Hi}			115		
FB Falling (Good)	PG_{Vth-Lo}			105		
Power Good Lower to High Delay	PG_{Td}			0.5		ms
Power Good Sink Current Capability	V_{PG}	Sink 4mA			0.4	V
Power Good Leakage Current	I_{PG_LEAK}	V_{PG} = 3.3V			150	nA
Thermal Protection						
Thermal Shutdown(6)	T_{SD}			150		°C
Thermal Shutdown Hysteresis				25		°C

Note:
6) Guaranteed by design.

MPS Proprietary Information. Patent Protected. Unauthorized Photocopy and Duplication Prohibited.
© 2026 MPS. All Rights Reserved.

TYPICAL PERFORMANCE CHARACTERISTICS

Performance waveforms are tested on the evaluation board of the Design Example section.

V_{IN}=20V, V_{OUT} =1.05V, L=1.2μH, T_J=+25°C, unless otherwise noted.

Efficiency vs. Load Current

V_{OUT}=1.05V, f_{SW}=500kHz, L=1.2μH
DCR=2mΩ,C_{OUT}=94μF

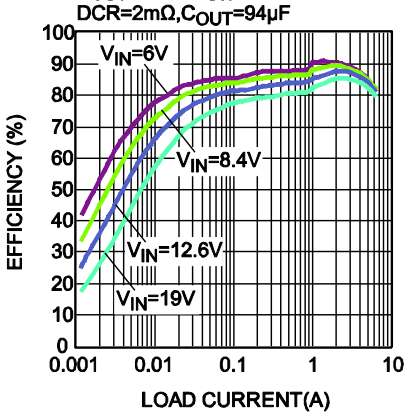

Efficiency vs. Load Current

V_{OUT}=5V, f_{SW}=500kHz, L=2μH
DCR=7.3mΩ,C_{OUT}=88μF

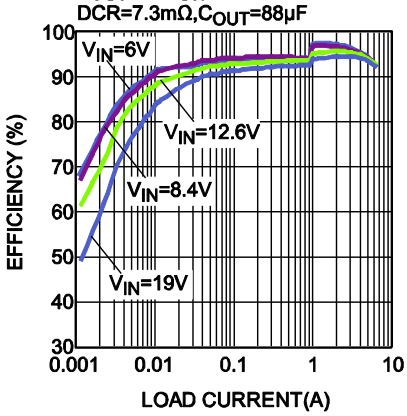

Power Loss

V_{OUT}=1.05V, f_{SW}=500kHz, L=1.2μH
DCR=2mΩ,C_{OUT}=94μF

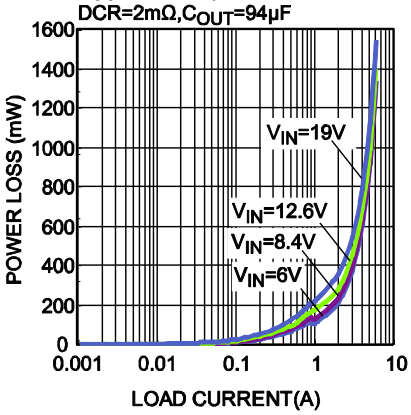

Power Loss

V_{OUT}=5V, f_{SW}=500kHz, L=2μH
DCR=7.3mΩ,C_{OUT}=88μF

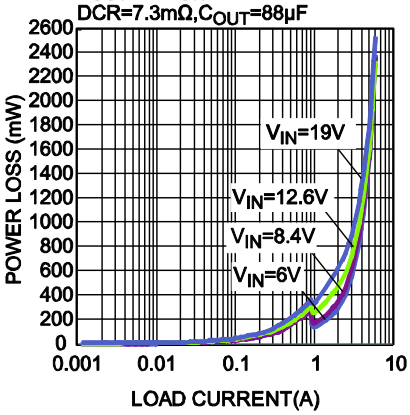

Load Regulation

V_{OUT}=1.05V

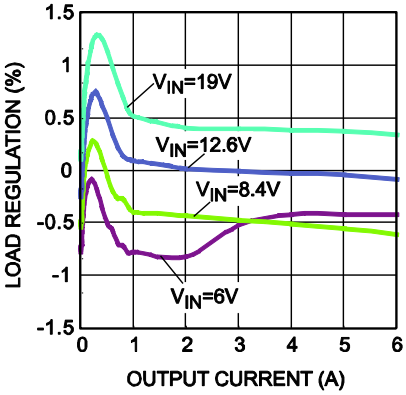

Load Regulation

V_{OUT}=5V

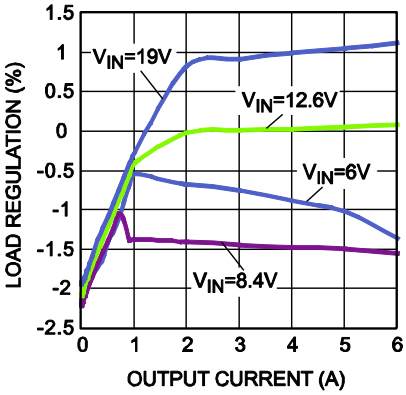

Temperature vs. Load Current

V_{IN}=19V, V_{OUT}=1.05V, L=1.2μH
DCR=2mΩ,C_{OUT}=88μF

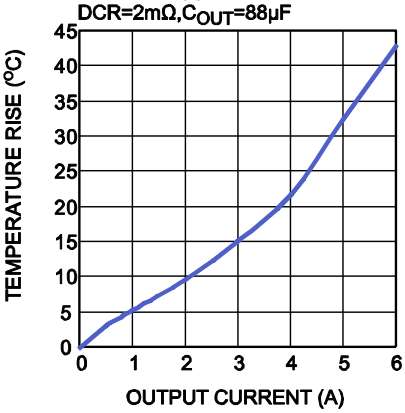

Temperature vs. Load Current

V_{IN}=19V, V_{OUT}=5V, L=2μH
DCR=7.3mΩ,C_{OUT}=88μF

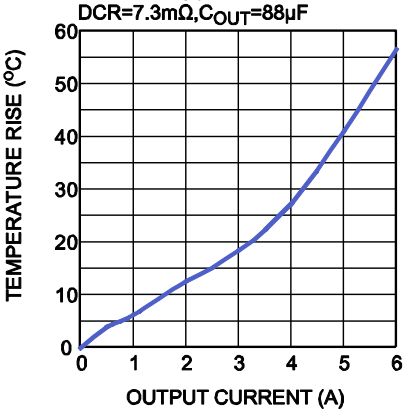

MPS Proprietary Information. Patent Protected. Unauthorized Photocopy and Duplication Prohibited.
© 2026 MPS. All Rights Reserved.

END OF LIFE

TYPICAL PERFORMANCE CHARACTERISTICS *(continued)*

Performance waveforms are tested on the evaluation board of the Design Example section.

V_{IN}=20V, V_{OUT} =1.05V, L=1.2µH, T_J=+25°C, unless otherwise noted.

Input/Output Voltage Ripple
I_{OUT} = 0A

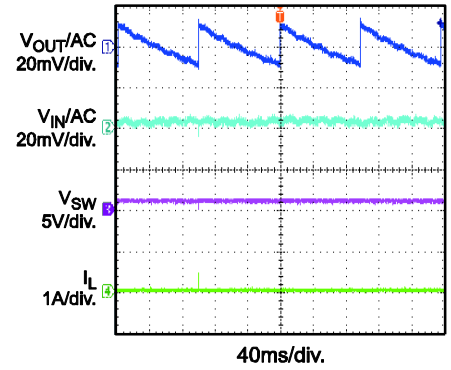

Input/Output Voltage Ripple
I_{OUT} = 6A

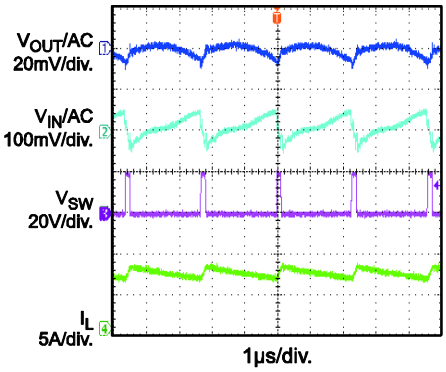

Power Good Through V_{IN} Start-Up
I_{OUT} = 6A

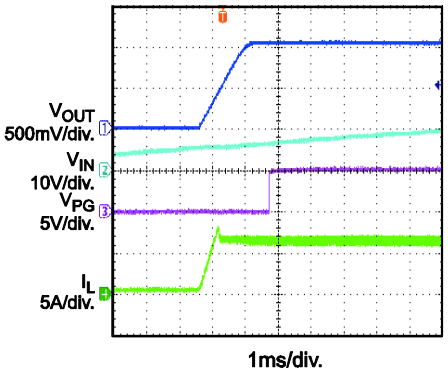

Power Good Through V_{IN} Shutdown
I_{OUT} = 6A

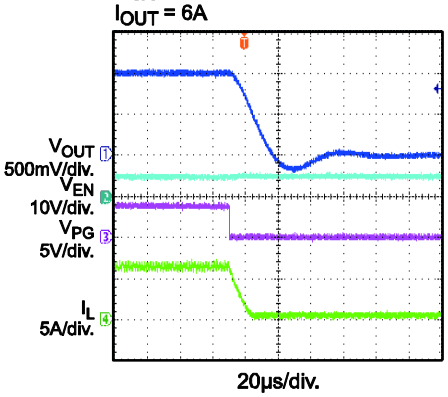

Power Good Through EN Start Up
I_{OUT} = 6A

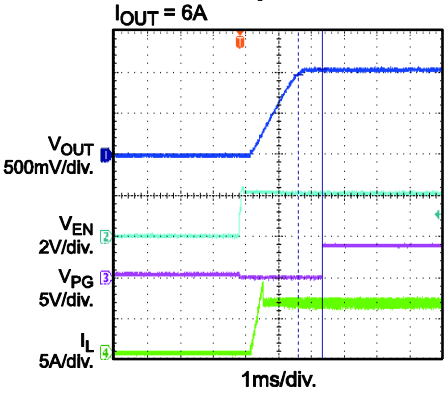

Power Good Through EN Shutdown
I_{OUT} = 6A

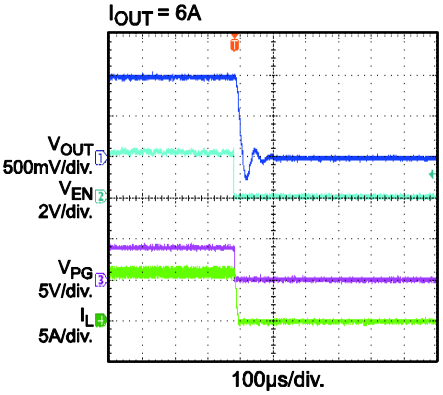

Start Up Through V_{IN}
V_{IN} = 20V, I_{OUT} = 0A

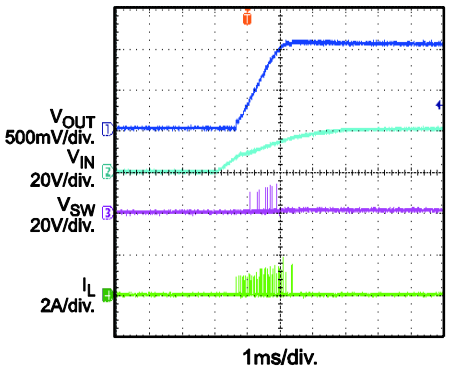

Start Up Through V_{IN}
V_{IN} = 20V, I_{OUT} = 6A

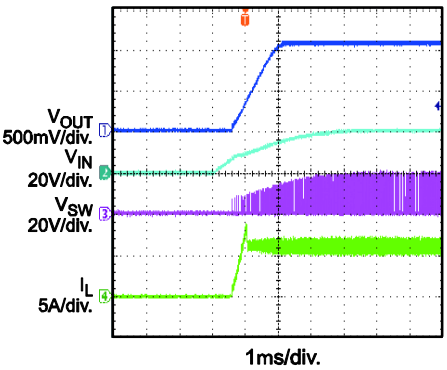

Shut Down Through V_{IN}
V_{IN} = 20V, I_{OUT} = 0A

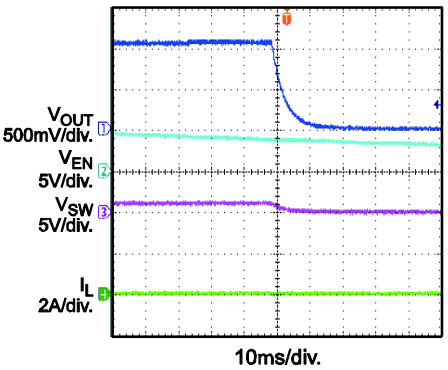

MPS Proprietary Information. Patent Protected. Unauthorized Photocopy and Duplication Prohibited.
© 2026 MPS. All Rights Reserved.

TYPICAL PERFORMANCE CHARACTERISTICS *(continued)*

Performance waveforms are tested on the evaluation board of the Design Example section.

V_{IN}=20V, V_{OUT} =1.05V, L=1.2μH, T_J=+25°C, unless otherwise noted.

Shut Down Through Vin
V_{IN}=20V, I_{OUT}=6A

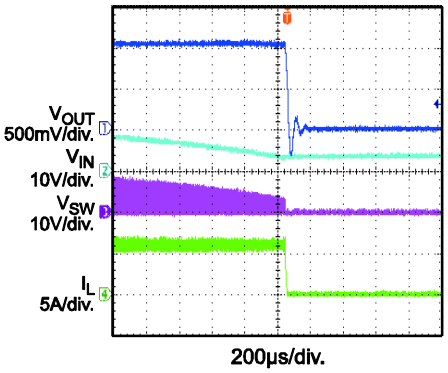

Start Up Through EN
I_{OUT} = 0A

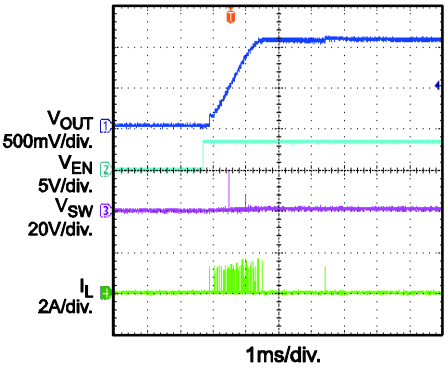

Start Up Through EN
I_{OUT} = 6A

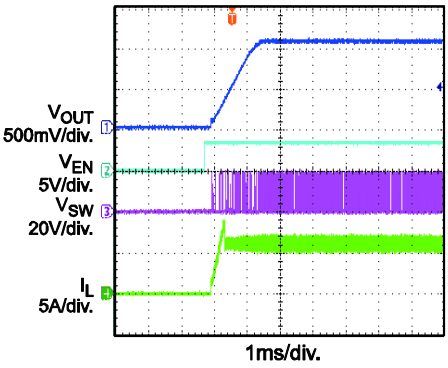

Shut Down Through EN
I_{OUT} = 0A

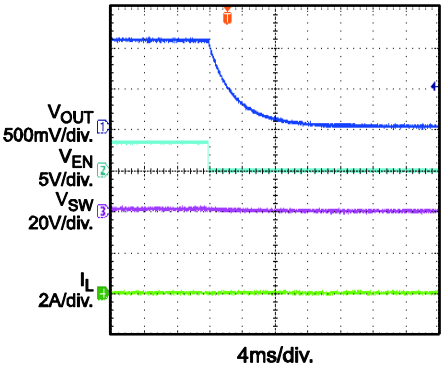

Shut Down Through EN
I_{OUT} = 6A

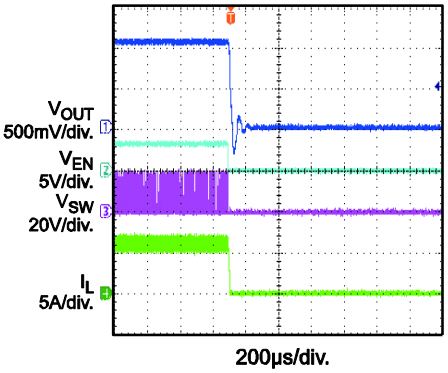

Transient
V_{IN}=20V, L=1.2μH, C_{OUT}=3x22μF,
I_{OUT} = 0A-6A@2.5A/μs,

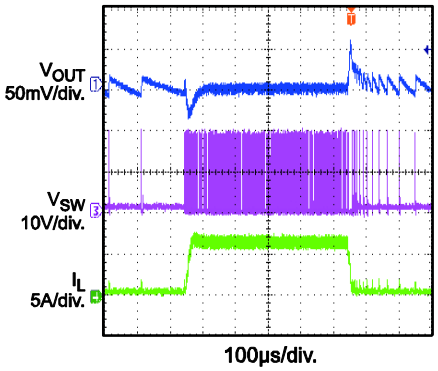

Short Circuit Protection
V_{IN}=20V

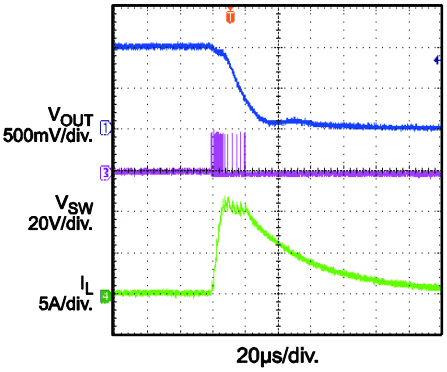

Thermal Shut Down
V_{IN}=20V, I_{OUT}=6A

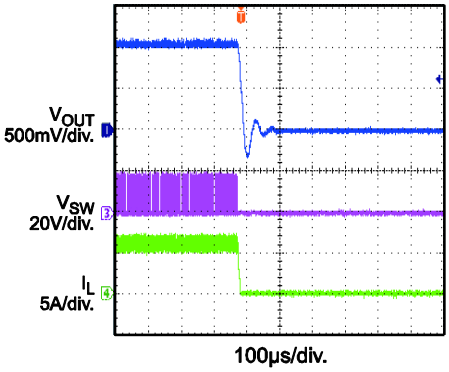

Thermal Recovery
V_{IN}=20V, I_{OUT}=6A

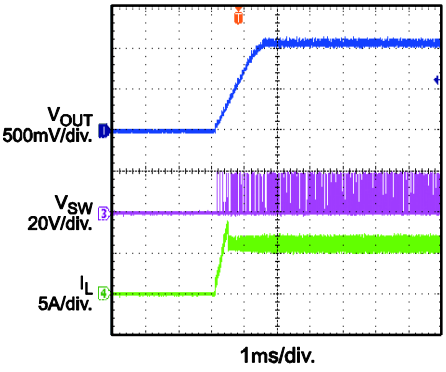

MPS Proprietary Information. Patent Protected. Unauthorized Photocopy and Duplication Prohibited.
© 2026 MPS. All Rights Reserved.

PIN FUNCTIONS

PIN #	Name	Description
1	VIN	Supply Voltage. The IN pin supplies power for internal MOSFET and regulator. The NB671LB operate from a +4.5V to +24V input rail. An input capacitor is needed to decouple the input rail. Use wide PCB traces and multiple vias to make the connection.
2	PGND	Power Ground. Use wide PCB traces and multiple vias to make the connection
3	LP#	Low power mode selection input, active low, connect this PIN to VCC with >50k resistor if not used, the LP# support 1.05V Logic and is 3.3V tolerant. The quiescent current will be lowered to 60μA in low power mode to further improve the light load efficiency.
4	PG	Power good output, the output of this pin is an open drain signal and is high if the output voltage is higher than 95% of the nominal voltage. There is a delay from FB ≥ 95% to PGOOD goes high.
5, 6	NC	
7	VOUT	VOUT pin is used to sense the output voltage of the Buck regulator, connect this pin to the output capacitor of the regulator directly.
8,9 Exposed Pad 15, 16	SW	Switch Output. Connect this pin to the inductor and bootstrap capacitor. This pin is driven up to the VIN voltage by the high-side switch during the on-time of the PWM duty cycle. The inductor current drives the SW pin negative during the off-time. The on-resistance of the low-side switch and the internal diode fixes the negative voltage. Use wide and short PCB traces to make the connection. Try to minimize the area of the SW pattern.
10	BST	Bootstrap. A capacitor connected between SW and BS pins is required to form a floating supply across the high-side switch driver.
11	VCC	Internal 5V LDO output. The driver and control circuits are powered from this voltage. Decouple with a minimum 1μF ceramic capacitor as close to the pin as possible. X7R or X5R grade dielectric ceramic capacitors are recommended for their stable temperature characteristics.
12	FB	Feedback. An external resistor divider from the output to GND, tapped to the FB pin, sets the output voltage. It is recommended to place the resistor divider as close to FB pin as possible. Vias should be avoided on the FB traces.
13	EN	Enable pin. EN is a digital input that turns the regulator on or off. Drive EN high to turn on the regulator, drive it low to turn it off. Connect EN with VIN through a pull-up resistor or a resistive voltage divider for automatic startup. Do not float this pin.
14	AGND	Analog ground. The internal reference is referred to AGND. Connect the GND of the FB divider resistor to AGND for better load regulation.

MPS Proprietary Information. Patent Protected. Unauthorized Photocopy and Duplication Prohibited.
© 2026 MPS. All Rights Reserved.

BLOCK DIAGRAM

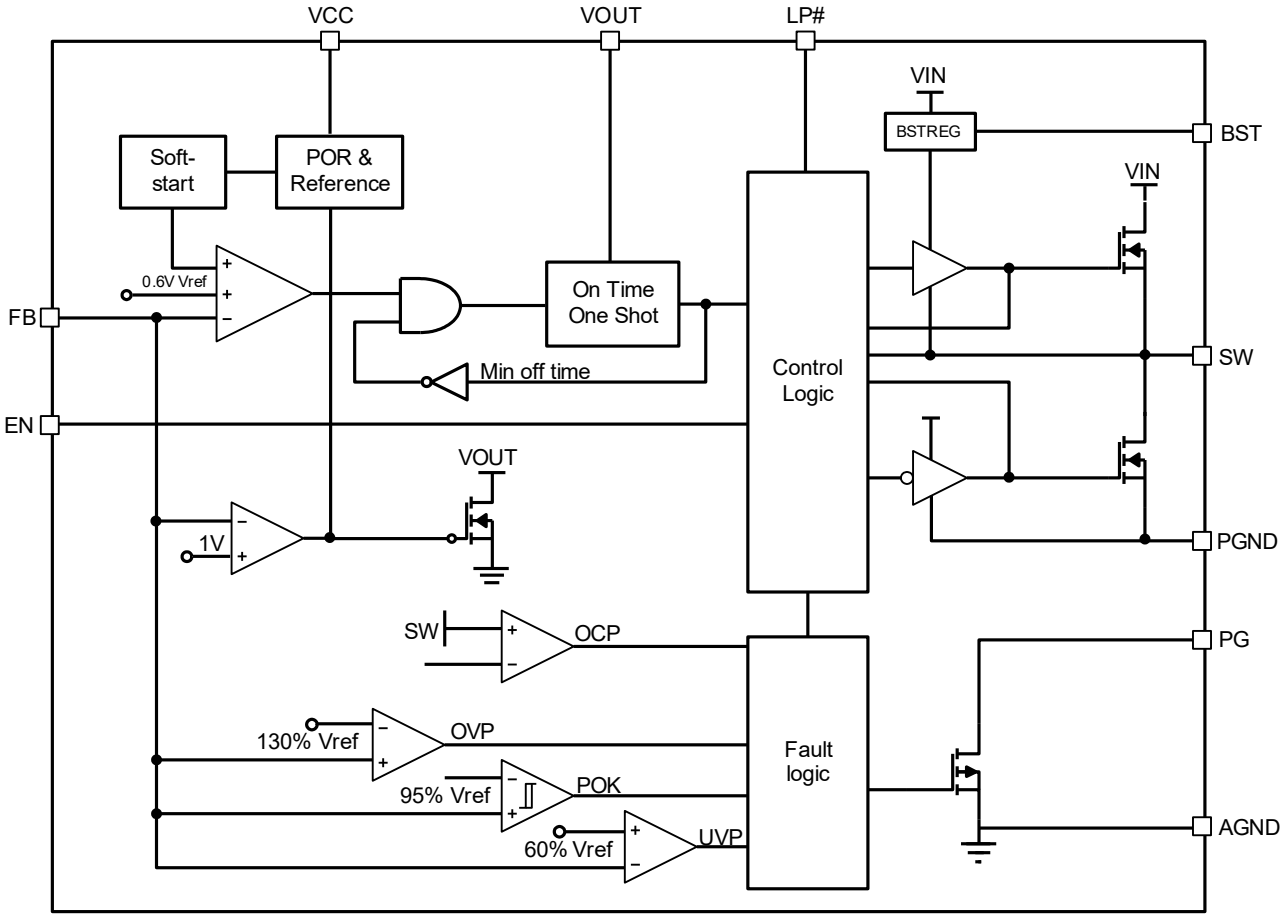

Figure 1—Functional Block Diagram

MPS Proprietary Information. Patent Protected. Unauthorized Photocopy and Duplication Prohibited.
© 2026 MPS. All Rights Reserved.

OPERATION

PWM Operation

The NB671LB is fully integrated synchronous rectified step-down switch mode converter with ultra low quiescent current. Constant-on-time (COT) control is employed to provide fast transient response and easy loop stabilization. At the beginning of each cycle, the high-side MOSFET (HS-FET) is turned ON when the feedback voltage (VFB) is below the reference voltage (VREF), which indicates insufficient output voltage. The ON period is determined by both the output voltage and input voltage to make the switching frequency fairy constant over input voltage range.

After the ON period elapses, the HS-FET is turned off, or becomes OFF state. It is turned ON again when VFB drops below VREF. By repeating operation this way, the converter regulates the output voltage. The integrated low-side MOSFET (LS-FET) is turned on when the HS-FET is in its OFF state to minimize the conduction loss. There will be a dead short between input and GND if both HS-FET and LS-FET are turned on at the same time. It's called shoot-through. In order to avoid shoot-through, a dead-time (DT) is internally generated between HS-FET off and LS-FET on, or LS-FET off and HS-FET on.

The NB671LB detects V_{IN} and V_{OUT}, when V_{IN} is close to V_{OUT}, the ON time will be extended; hence the switching frequency decreases. By doing that, this part is able to support 5.5V V_{IN} to 5V V_{OUT} conversion.

The switching frequency is lowered to around 150kHz when V_{IN} is 5.5V and V_{OUT} is 5V. As V_{IN} is so close to V_{OUT}, the inductor current ripple is very small; hence the output voltage ripple is also well controlled even the switching frequency is 150kHz.

An internal compensation is applied for COT control to make a more stable operation even when ceramic capacitors are used as output capacitors, this internal compensation will then improve the jitter performance without affect the line or load regulation.

Heavy-Load Operation

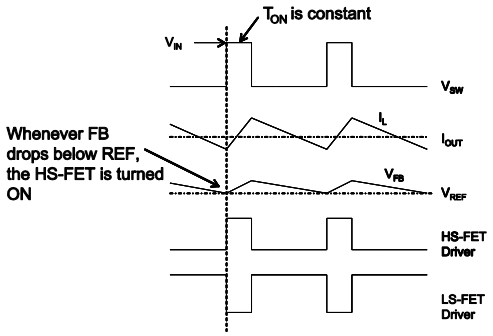

Figure 2—Heavy Load Operation

When the output current is high and the inductor current is always above zero amps, it is called continuous-conduction-mode (CCM). The CCM mode operation is shown in Figure 2 shown. When V_{FB} is below V_{REF}, HS-MOSFET is turned on for a fixed interval which is determined by one- shot on-timer as equation 1 shown. When the HS-MOSFET is turned off, the LS-MOSFET is turned on until next period.

In CCM mode operation, the switching frequency is fairly constant and it is called PWM mode.

Light-Load Operation

With the load decrease, the inductor current decrease too. Once the inductor current touch zero, the operation is transition from continuous-conduction-mode (CCM) to discontinuous-conduction-mode (DCM).

The light load operation is shown in Figure 3. When V_{FB} is below V_{REF}, HS-MOSFET is turned on for a fixed interval which is determined by one- shot on-timer as equation 1 shown. When the HS-MOSFET is turned off, the LS-MOSFET is turned on until the inductor current reaches zero. In DCM operation, the V_{FB} does not reach V_{REF} when the inductor current is approaching zero. The LS-FET driver turns into tri-state (high Z) whenever the inductor current reaches zero. A current modulator takes over the control of LS-FET and limits the inductor current to less than -1mA. Hence, the output capacitors discharge slowly to GND through LS-FET. As a result, the efficiency at light load condition is greatly improved. At light load condition, the HS-FET is

MPS Proprietary Information. Patent Protected. Unauthorized Photocopy and Duplication Prohibited.
© 2026 MPS. All Rights Reserved.

not turned ON as frequently as at heavy load condition. This is called skip mode.

At light load or no load condition, the output drops very slowly and the NB671LB reduces the switching frequency naturally and then high efficiency is achieved at light load.

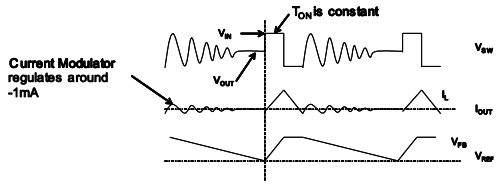

Figure 3—Light Load Operation

As the output current increases from the light load condition, the time period within which the current modulator regulates becomes shorter. The HS-FET is turned ON more frequently. Hence, the switching frequency increases correspondingly. The output current reaches the critical level when the current modulator time is zero. The critical level of the output current is determined as follows:

$$I_{OUT} = \frac{(V_{IN} - V_{OUT}) \times V_{OUT}}{2 \times L \times F_{SW} \times V_{IN}} \quad (1)$$

It turns into PWM mode once the output current exceeds the critical level. After that, the switching frequency stays fairly constant over the output current range.

Jitter and FB Ramp Slope

Jitter occurs in both PWM and skip modes when noise in the VFB ripple propagates a delay to the HS-FET driver, as shown in Figures 4 and 5. Jitter can affect system stability, with noise immunity proportional to the steepness of VFB's downward slope. However, VFB ripple does not directly affect noise immunity.

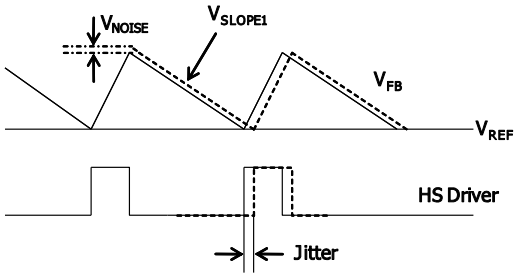

Figure 4—Jitter in PWM Mode

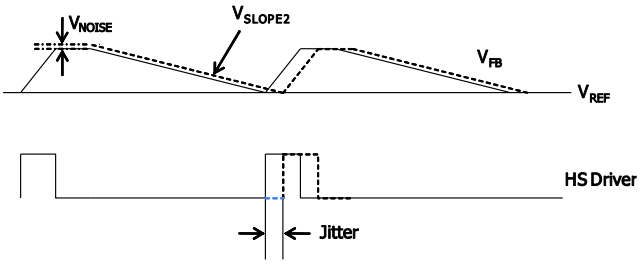

Figure 5—Jitter in Skip Mode

Operating without external ramp

The traditional constant-on-time control scheme is intrinsically unstable if output capacitor's ESR is not large enough as an effective current-sense resistor. Ceramic capacitors usually can not be used as output capacitor.

To realize the stability, the ESR value should be chosen as follow:

$$R_{ESR} \geq \frac{\frac{T_{SW}}{0.7 \times \pi} + \frac{T_{ON}}{2}}{C_{OUT}} \quad (2)$$

T_{SW} is the switching period.

The NB671LB has built in internal ramp compensation to make sure the system is stable even without the help of output capacitor's ESR; and thus the pure ceramic capacitor solution can be applicant. The pure ceramic capacitor solution can significantly reduce the output ripple, total BOM cost and the board area.

Figure 6 shows a typical output circuit in PWM mode without an external ramp circuit. Turn to application information section for design steps without external compensation.

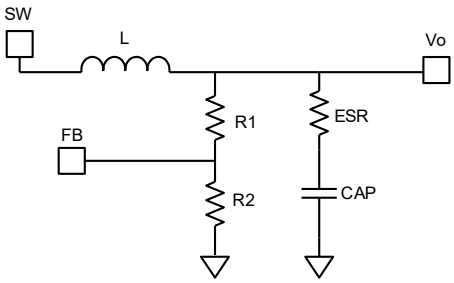

Figure 6—Simplified Circuit in PWM Mode without External Ramp Compensation

MPS Proprietary Information. Patent Protected. Unauthorized Photocopy and Duplication Prohibited.
© 2026 MPS. All Rights Reserved.

When using a large-ESR capacitor on the output, add a ceramic capacitor with a value of 10uF or less to in parallel to minimize the effect of ESL.

Operating with external ramp compensation

The NB671LB is usually able to support ceramic output capacitors without external ramp, however, in some of the cases, the internal ramp may not be enough to stabilize the system, and external ramp compensation is needed. Skip to application information section for design steps with external ramp compensation.

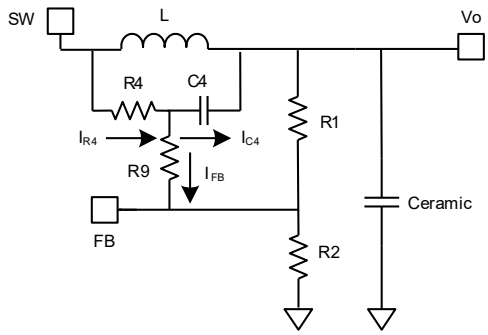

Figure 7—Simplified Circuit in PWM Mode with External Ramp Compensation

Figure 7 shows a simplified external ramp compensation (R4 and C4) for PWM mode, with HS-FET off. Chose R1, R2, R9 and C4 of the external ramp to meet the following condition:

$$\frac{1}{2\pi \times F_{SW} \times C_4} < \frac{1}{5} \times \left(\frac{R_1 \times R_2}{R_1 + R_2} + R_9 \right) \quad (3)$$

Where:

$$I_{R4} = I_{C4} + I_{FB} \approx I_{C4} \quad (4)$$

And the Vramp on the V_{FB} can then be estimated as:

$$V_{RAMP} = \frac{V_{IN} - V_{OUT}}{R_4 \times C_4} \times T_{ON} \times \frac{R_1 // R_2}{R_1 // R_2 + R_9} \quad (5)$$

The downward slope of the V_{FB} ripple then follows

$$V_{SLOPE1} = \frac{-V_{RAMP}}{T_{off}} = \frac{-V_{OUT}}{R_4 \times C_4} \quad (6)$$

As can be seen from equation 6, if there is instability in PWM mode, we can reduce either R4 or C4. If C4 can not be reduced further due to limitation from equation 3, then we can only reduce R4. For a stable PWM operation, the V_{slope1} should be design follow equation 7.

$$-V_{slope1} \geq \frac{\frac{T_{SW}}{0.7 \times \pi} + \frac{T_{ON}}{2} - R_{ESR} C_{OUT}}{2 \times L \times C_{OUT}} V_{OUT} + \frac{Io \times 10^{-3}}{T_{SW} - T_{on}} \quad (7)$$

Io is the load current.

In skip mode, the downward slope of the V_{FB} ripple is the same whether the external ramp is used or not. Figure 8 shows the simplified circuit of the skip mode when both the HS-FET and LS-FET are off.

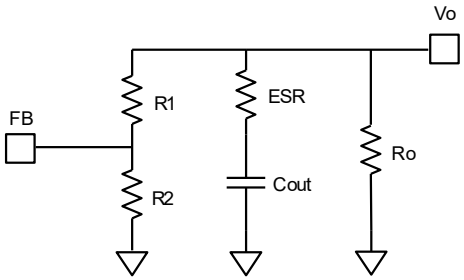

Figure 8—Simplified Circuit in skip Mode

The downward slope of the V_{FB} ripple in skip mode can be determined as follow:

$$V_{SLOPE2} = \frac{-V_{REF}}{((R_1 + R_2) // Ro) \times C_{OUT}} \quad (8)$$

Where Ro is the equivalent load resistor.

As described in Figure 5, VSLOPE2 in the skip mode is lower than that is in the PWM mode, so it is reasonable that the jitter in the skip mode is larger. If one wants a system with less jitter during light load condition, the values of the VFB resistors should not be too big, however, that will decrease the light load efficiency.

Configuring the EN Control

EN is used to enable or disable the whole chip. Pull En high to turn on the regulator and pull EN low to turn it off. Do not float the pin.

For automatic start-up the EN pin can be pulled up to input voltage through a resistive voltage divider. Choose the values of the pull-up resistor (Rup from VIN pin to EN pin) and the pull-down resistor (Rdown from EN pin to GND) to determine the automatic start-up voltage:

$$V_{IN-START} = 1.25 \times \frac{(R_{up} + R_{down})}{R_{down}} (V) \quad (9)$$

MPS Proprietary Information. Patent Protected. Unauthorized Photocopy and Duplication Prohibited.
© 2026 MPS. All Rights Reserved.

For example, for Rup=150kΩ and Rdown=51kΩ, the $V_{IN-START}$ is set at 4.92V.

To avoid noise, a 10nF ceramic capacitor from EN to GND is recommended.

There is an internal Zener diode on the EN pin, which clamps the EN pin voltage to prevent it from running away. The maximum pull up current assuming a worst case 6V internal Zener clamp should be less than 1mA.

Therefore, when EN is driven by an external logic signal, the EN voltage should be lower than 6V; when EN is connected with VIN through a pull-up resistor or a resistive voltage divider, the resistance selection should ensure the maximum pull up current less than 1mA.

If using a resistive voltage divider and VIN higher than 5.5V, the allowed minimum pull-up resistor Rup should meet the following equation:

$$\frac{V_{IN}-6V}{R_{up}}-\frac{6V}{R_{down}}=1mA \quad (10)$$

Especially, just using the pull-up resistor Rup(the pull-down resistor is not connected), the $V_{IN-START}$ is determined by input UVLO, and the minimum resistor value is:

$$R_{up}=\frac{V_{IN}-6V}{1mA}(W) \quad (11)$$

A typical pull-up resistor is 100kΩ.

Soft Start

The NB671LB employs soft start (SS) mechanism to ensure smooth output during power-up. When the EN pin becomes high, the internal reference voltage ramps up gradually; hence, the output voltage ramps up smoothly, as well. Once the reference voltage reaches the target value, the soft start finishes and it enters into steady state operation.

If the output is pre-biased to a certain voltage during startup, the IC will disable the switching of both high-side and low-side switches until the voltage on the internal reference exceeds the sensed output voltage at the FB node.

Power Good (PGOOD)

The NB671LB has power-good (PGOOD) output used to indicate whether the output voltage of the Buck regulator is ready or not. The PGOOD pin is the open drain of a MOSFET. It should be connected to V_{CC} or other voltage source through a resistor (e.g. 100k). After the input voltage is applied, the MOSFET is turned on so that the PGOOD pin is pulled to GND before SS is ready. After FB voltage reaches 95% of REF voltage, the PGOOD pin is pulled high after a delay. The PGOOD delay time is 1ms.

When the FB voltage drops to 85% of REF voltage, the PGOOD pin will be pulled low.

Over Current Protection

NB671LB has cycle-by-cycle over current limiting control. The current-limit circuit employs a "valley" current-sensing algorithm. The part uses the Rds(on) of the low side MOSFET as a current-sensing element. If the magnitude of the current-sense signal is above the current-limit threshold, the PWM is not allowed to initiate a new cycle.

The trip level is fixed internally. The inductor current is monitored by the voltage between GND pin and SW pin. GND is used as the positive current sensing node so that GND should be connected to the source terminal of the bottom MOSFET.

Since the comparison is done during the high side MOSFET OFF and low side MOSFET ON state, the OC trip level sets the valley level of the inductor current. Thus, the load current at over-current threshold, I_{OC}, can be calculated as follows:

$$I_{OC}=I_limit+\frac{\Delta I_{inductor}}{2} \quad (12)$$

In an over-current condition, the current to the load exceeds the current to the output capacitor; thus the output voltage tends to fall off. Eventually, it will end up with crossing the under voltage protection threshold and shutdown. And fault latching can be reset by EN going low or Power-cycling of VIN.

Over/Under-Voltage Protection (OVP/UVP)

NB671LB monitors a resistor divided feedback voltage to detect over and under voltage. When the feedback voltage becomes higher than 130% of the feedback voltage, the OVP comparator output goes high and the circuit latches as the high-side MOSFET driver OFF and the low-side MOSFET turns on acting as an -1A current source.

MPS Proprietary Information. Patent Protected. Unauthorized Photocopy and Duplication Prohibited.
© 2026 MPS. All Rights Reserved.

When the feedback voltage becomes lower than 60% of the target voltage, the UVP comparator output goes high if the UV still occurs after 26us delay; then the fault latch will be triggered---latches HS off and LS on; the LS FET keeps on until the inductor current goes zero. Also fault latching can be reset by EN going low or Power-cycling of VIN.

UVLO Protection

The NB671LB has under-voltage lock-out protection (UVLO). When the VCC voltage is higher than the UVLO rising threshold voltage, the part will be powered up. It shuts off when the VIN voltage is lower than the UVLO falling threshold voltage. This is non-latch protection. The part is disabled when the VCC voltage falls below 3.9V. Besides fault latching can be reset by EN going low or Power-cycling of VIN. If an application requires a higher under-voltage lockout (UVLO), use the EN pin as shown in Figure 9 to adjust the input voltage UVLO by using two external resistors. It is recommended to use the enable resistors to set the UVLO falling threshold (VSTOP) above 3.9V. The rising threshold (VSTART) should be set to provide enough hysteresis to allow for any input supply variations.

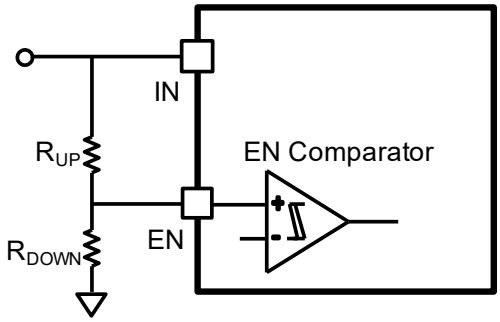

Figure 9—Adjustable UVLO

Thermal Shutdown

Thermal shutdown is employed in the NB671LB. The junction temperature of the IC is internally monitored. If the junction temperature exceeds the threshold value (typical 150ºC), the converter shuts off. This is a non-latch protection. There is about 25ºC hysteresis. Once the junction temperature drops to about 125ºC, it initiates a SS.

Output Discharge

NB671LB discharges the output when EN is low, or the controller is turned off by the protection functions (UVP & OCP, OCP, OVP, UVLO, and thermal shutdown). The part discharges outputs using an internal 6Ω MOSFET which is connected to VOUT and GND. The external low-side MOSFET is not turned on for the output discharge operation to avoid the possibility of causing negative voltage at the output.

MPS Proprietary Information. Patent Protected. Unauthorized Photocopy and Duplication Prohibited.
© 2026 MPS. All Rights Reserved.

APPLICATION INFORMATION

Setting the Output Voltage---without external compensation

For applications that electrolytic capacitor or POS capacitor with a controlled output of ESR is set as output capacitors, or the internal compensation is enough for a stable operation when ceramic capacitors is used, then the external compensation is not need.. The output voltage is set by feedback resistors R1 and R2. As Figure 10 shows.

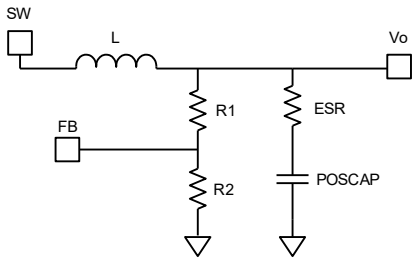

Figure10—Simplified Circuit of POS Capacitor

First, choose a value for R2. R2 should be chosen reasonably, a small R2 will lead to considerable quiescent current loss while too large R2 makes the FB noise sensitive. It is recommended to choose a value within 5kΩ-100kΩ for R2, then R1 is determined as follow with the output ripple considered:

$$R_1 = \frac{V_{OUT} - \frac{1}{2}\Delta V_{OUT} - V_{REF}}{V_{REF}} \cdot R_2 \quad (13)$$

ΔV_{OUT} is the output ripple.

Setting the Output Voltage---with external compensation

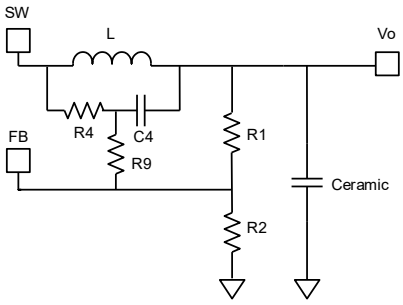

Figure11—Simplified Circuit of Ceramic Capacitor

If the system is not stable enough when low ESR ceramic capacitor is used in the output, an external voltage ramp should be added to FB through resistor R4 and capacitor C4.The output voltage is influenced by ramp voltage V_{RAMP} besides R divider as shown in Figure 11. The V_{RAMP} can be calculated as shown in equation 7. R2 should be chosen reasonably, a small R2 will lead to considerable quiescent current loss while too large R2 makes the FB noise sensitive. It is recommended to choose a value within 5kΩ-50kΩ for R2, using a comparatively larger R2 when Vo is low, etc.,1.05V, and a smaller R2 when Vo is high. And the value of R1 then is determined as follow:

$$R_1 = \frac{R_2}{\frac{V_{FB(AVG)}}{(V_{OUT} - V_{FB(AVG)})} - \frac{R_2}{R_4 + R_9}} \quad (14)$$

The $V_{FB(AVG)}$ is the average value on the FB, $V_{FB(AVG)}$ varies with the Vin, Vo, and load condition, etc., its value on the skip mode would be lower than that of the PWM mode, which means the load regulation is strictly related to the $V_{FB(AVG)}$. Also the line regulation is related to the $V_{FB(AVG)}$. If one wants to gets a better load or line regulation, a lower Vramp is suggested, as long as the criterion shown in equation 8 can be met.

For PWM operation, $V_{FB(AVG)}$ value can be deduced from the equation below.

$$V_{FB(AVG)} = V_{REF} + \frac{1}{2} V_{RAMP} \times \frac{R_1 // R_2}{R_1 // R_2 + R_9} \quad (15)$$

Usually, R9 is set to 0Ω, and it can also be set following equation 14 for a better noise immunity. It should also set to be 5 times smaller than R1//R2 to minimize its influence on Vramp.

$$R_9 = \frac{1}{2\pi \times C_4 \times 2F_{SW}} \quad (16)$$

Using equation 13 to calculate the R1 can be complicated. To simplify the calculation, a DC-blocking capacitor Cdc can be added to filter the DC influence from R4 and R9. Figure 12 shows a simplified circuit with external ramp compensation and a DC-blocking capacitor. With this capacitor, R1 can easily be obtained by using the simplified equation for PWM mode operation:

MPS Proprietary Information. Patent Protected. Unauthorized Photocopy and Duplication Prohibited.
© 2026 MPS. All Rights Reserved.

$$R_1 = \frac{(V_{OUT} - V_{REF} - \frac{1}{2}V_{RAMP})}{V_{REF} + \frac{1}{2}V_{RAMP}} R_2 \quad (17)$$

Cdc is suggested to be at least 10 times larger than C4 for better DC blocking performance, and should also not larger than 0.47uF considering start up performance. In case one wants to use larger Cdc for a better FB noise immunity, combined with reduced R1 and R2 to limit the Cdc in a reasonable value without affecting the system start up. Be noted that even when the Cdc is applied, the load and line regulation are still Vramp related.

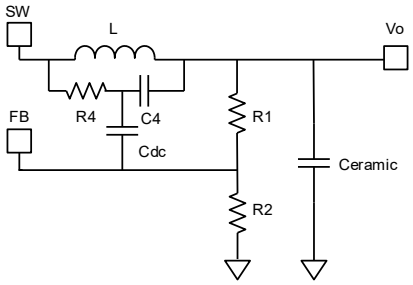

Figure12—Simplified Circuit of Ceramic Capacitor with DC blocking capacitor

Input Capacitor

The input current to the step-down converter is discontinuous and therefore requires a capacitor to supply the AC current to the step-down converter while maintaining the DC input voltage. Ceramic capacitors are recommended for best performance and should be placed as close to the VIN pin as possible. Capacitors with X5R and X7R ceramic dielectrics are recommended because they are fairly stable with temperature fluctuations.

The capacitors must also have a ripple current rating greater than the maximum input ripple current of the converter. The input ripple current can be estimated as follows:

$$I_{CIN} = I_{OUT} \times \sqrt{\frac{V_{OUT}}{V_{IN}} \times (1 - \frac{V_{OUT}}{V_{IN}})} \quad (18)$$

The worst-case condition occurs at $V_{IN} = 2V_{OUT}$, where:

$$I_{CIN} = \frac{I_{OUT}}{2} \quad (19)$$

For simplification, choose the input capacitor with an RMS current rating greater than half of the maximum load current.

The input capacitance value determines the input voltage ripple of the converter. If there is an input voltage ripple requirement in the system, choose the input capacitor that meets the specification.

The input voltage ripple can be estimated as follows::

$$\Delta V_{IN} = \frac{I_{OUT}}{F_{SW} \times C_{IN}} \times \frac{V_{OUT}}{V_{IN}} \times (1 - \frac{V_{OUT}}{V_{IN}}) \quad (20)$$

Under worst-case conditions where $V_{IN} = 2V_{OUT}$:

$$\Delta V_{IN} = \frac{1}{4} \times \frac{I_{OUT}}{F_{SW} \times C_{IN}} \quad (21)$$

Output Capacitor

The output capacitor is required to maintain the DC output voltage. Ceramic or POSCAP capacitors are recommended. The output voltage ripple can be estimated as:

$$\Delta V_{OUT} = \frac{V_{OUT}}{F_{SW} \times L} \times (1 - \frac{V_{OUT}}{V_{IN}}) \times (R_{ESR} + \frac{1}{8 \times F_{SW} \times C_{OUT}}) \quad (22)$$

In the case of ceramic capacitors, the impedance at the switching frequency is dominated by the capacitance. The output voltage ripple is mainly caused by the capacitance. For simplification, the output voltage ripple can be estimated as:

$$\Delta V_{OUT} = \frac{V_{OUT}}{8 \times F_{SW}^2 \times L \times C_{OUT}} \times (1 - \frac{V_{OUT}}{V_{IN}}) \quad (23)$$

The output voltage ripple caused by ESR is very small. Therefore, an external ramp is needed to stabilize the system. The external ramp can be generated through resistor R4 and capacitor C4.

In the case of POSCAP capacitors, the ESR dominates the impedance at the switching frequency. The ramp voltage generated from the ESR is high enough to stabilize the system. Therefore, an external ramp is not needed. A minimum ESR value around 12mΩ is required to ensure stable operation of the converter. For simplification, the output ripple can be approximated as:

MPS Proprietary Information. Patent Protected. Unauthorized Photocopy and Duplication Prohibited.
© 2026 MPS. All Rights Reserved.

$$\Delta V_{OUT} = \frac{V_{OUT}}{F_{SW} \times L} \times (1 - \frac{V_{OUT}}{V_{IN}}) \times R_{ESR} \quad (24)$$

Maximum output capacitor limitation should be also considered in design application. NB671LB has an around 1.6ms soft-start time period. If the output capacitor value is too high, the output voltage can't reach the design value during the soft-start time, and then it will fail to regulate. The maximum output capacitor value C_{o_max} can be limited approximately by:

$$C_{O_MAX} = (I_{LIM_AVG} - I_{OUT}) \times T_{ss} / V_{OUT} \quad (25)$$

Where, I_{LIM_AVG} is the average start-up current during soft-start period. T_{ss} is the soft-start time.

Inductor

The inductor is necessary to supply constant current to the output load while being driven by the switched input voltage. A larger-value inductor will result in less ripple current that will result in lower output ripple voltage. However, a larger-value inductor will have a larger physical footprint, higher series resistance, and/or lower saturation current. A good rule for determining the inductance value is to design the peak-to-peak ripple current in the inductor to be in the range of 30% to 40% of the maximum output current, and that the peak inductor current is below the maximum switch current limit. The inductance value can be calculated by:

$$L = \frac{V_{OUT}}{F_{SW} \times \Delta I_L} \times (1 - \frac{V_{OUT}}{V_{IN}}) \quad (26)$$

Where ΔI_L is the peak-to-peak inductor ripple current.

The inductor should not saturate under the maximum inductor peak current, where the peak inductor current can be calculated by:

$$I_{LP} = I_{OUT} + \frac{V_{OUT}}{2F_{SW} \times L} \times (1 - \frac{V_{OUT}}{V_{IN}}) \quad (27)$$

PCB Layout Guide

1. The high current paths (GND, IN, and SW) should be placed very close to the device with short, direct and wide traces.
2. Put the input capacitors as close to the IN and GND pins as possible.
3. Put the decoupling capacitor as close to the VCC and GND pins as possible. Place the Cap close to AGND if the distance is long. And place >3 Vias if via is required to reduce the leakage inductance.
4. Keep the switching node SW short and away from the feedback network.
5. The external feedback resistors should be placed next to the FB pin. Make sure that there is no via on the FB trace.
6. Keep the BST voltage path (BST, C3, and SW) as short as possible.
7. Keep the IN and GND pads connected with large copper and use at least two layers for IN and GND trace to achieve better thermal performance. Also, add several Vias with 10mil_drill/18mil_copper_width close to the IN and GND pads to help on thermal dissipation.
8. Four-layer layout is strongly recommended to achieve better thermal performance.

Note:

Please refer to the PCB Layout Application Note for more details.

MPS Proprietary Information. Patent Protected. Unauthorized Photocopy and Duplication Prohibited.
© 2026 MPS. All Rights Reserved.

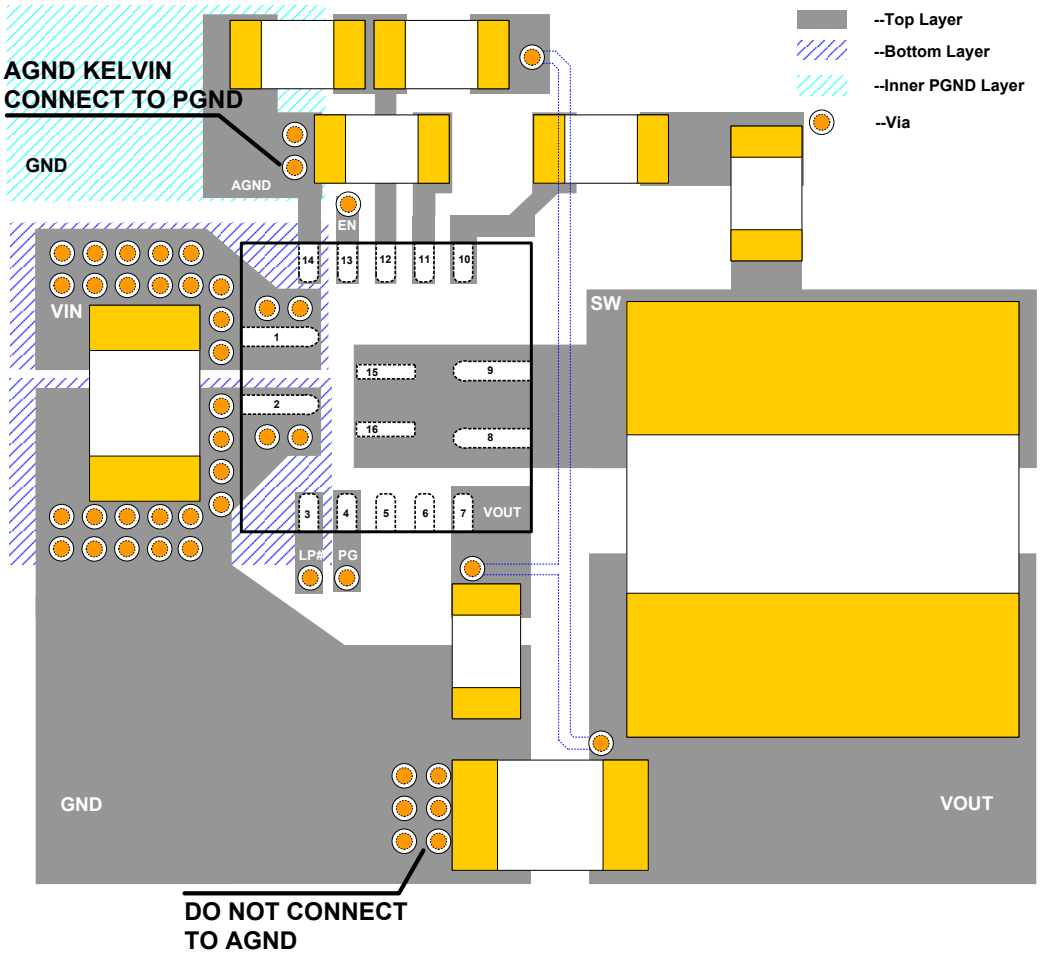

Figure 13—Recommend Layout

Recommend Design Example

A design example is provided below when the ceramic capacitors are applied:

Table 2—Design Example

NB671LB							
V_{OUT} (V)	Cout (F)	L (μH)	R4 (Ω)	C4 (F)	R9 (kΩ)	R1 (kΩ)	R2 (kΩ)
1.05	22μx3	1.2	NS	220p	0.5	59	82
5.0	22μ+330μF OSCON	2.2	NS	220p	0.5	71.5	10

The detailed application schematic is shown in Figure 14 when low ESR caps are used. The typical performance and circuit waveforms have been shown in the Typical Performance Characteristics section. For more possible applications of this device, please refer to related Evaluation Board Data Sheets.

MPS Proprietary Information. Patent Protected. Unauthorized Photocopy and Duplication Prohibited.
© 2026 MPS. All Rights Reserved.

TYPICAL APPLICATION

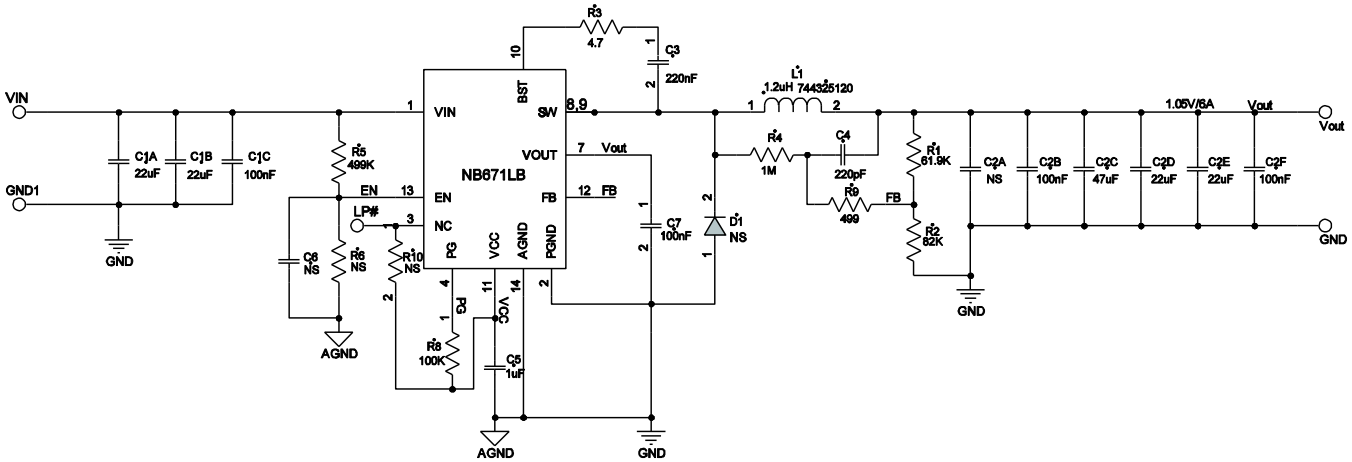

Figure 14 — Typical Application Circuit For NB671LB

V_{IN}=4.5-22V, V_{OUT}=1.05V, I_{OUT}=6A

MPS Proprietary Information. Patent Protected. Unauthorized Photocopy and Duplication Prohibited.
© 2026 MPS. All Rights Reserved.

PACKAGE INFORMATION

QFN16 (3X3mm)

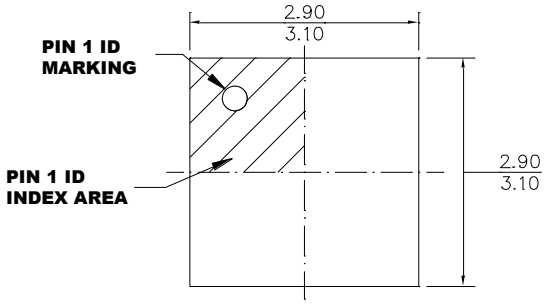

TOP VIEW

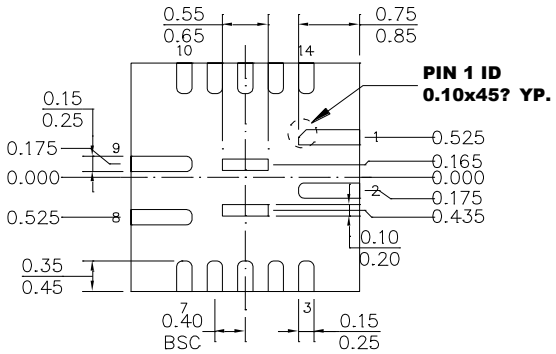

BOTTOM VIEW

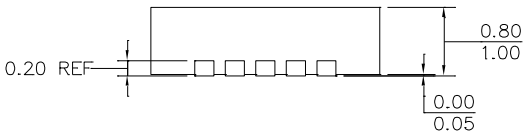

SIDE VIEW

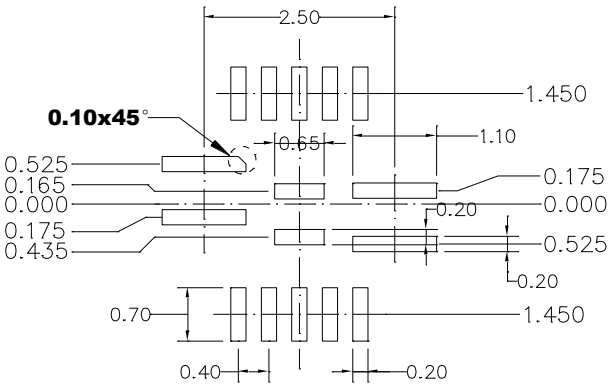

RECOMMENDED LAND PATTERN

NOTE:

1) ALL DIMENSIONS ARE IN MILLIMETERS.
2) EXPOSED PADDLE SIZE DOES NOT INCLUDE MOLD FLASH.
3) LEAD COPLANARITY SHALL BE 0.10 MILLIMETERS MAX.
4) JEDEC REFERENCE IS MO-220.
5) DRAWING IS NOT TO SCALE.

NOTICE: The information in this document is subject to change without notice. Users should warrant and guarantee that third party Intellectual Property rights are not infringed upon when integrating MPS products into any application. MPS will not assume any legal responsibility for any said applications.

MPS Proprietary Information. Patent Protected. Unauthorized Photocopy and Duplication Prohibited.
© 2026 MPS. All Rights Reserved.