International
IOR Rectifier

PD - 95943B

IRFR2905ZPbF
IRFU2905ZPbF

HEXFET® Power MOSFET

Features

- Advanced Process Technology
- Ultra Low On-Resistance
- 175°C Operating Temperature
- Fast Switching
- Repetitive Avalanche Allowed up to Tjmax
- Lead-Free

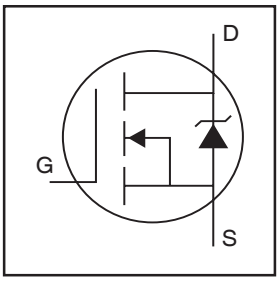

V_{DSS} = 55V

$R_{DS(on)}$ = 14.5mΩ

I_D = 42A

Description

This HEXFET® Power MOSFET utilizes the latest processing techniques to achieve extremely low on-resistance per silicon area. Additional features of this design are a 175°C junction operating temperature, fast switching speed and improved repetitive avalanche rating. These features combine to make this design an extremely efficient and reliable device for use in a wide variety of applications.

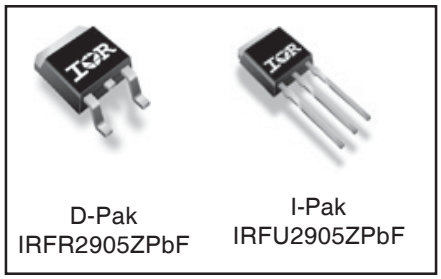

D-Pak
IRFR2905ZPbF

I-Pak
IRFU2905ZPbF

Absolute Maximum Ratings

	Parameter	Max.	Units
I_D @ T_C = 25°C	Continuous Drain Current, V_{GS} @ 10V (Silicon Limited)	59	A
I_D @ T_C = 100°C	Continuous Drain Current, V_{GS} @ 10V	42	
I_D @ T_C = 25°C	Continuous Drain Current, V_{GS} @ 10V (Package Limited)	42	
I_{DM}	Pulsed Drain Current ①	240	
P_D @T_C = 25°C	Power Dissipation	110	W
	Linear Derating Factor	0.72	W/°C
V_{GS}	Gate-to-Source Voltage	± 20	V
$E_{AS\ (Thermally\ limited)}$	Single Pulse Avalanche Energy②	55	mJ
E_{AS} (Tested)	Single Pulse Avalanche Energy Tested Value ⑥	82	
I_{AR}	Avalanche Current ①	See Fig.12a, 12b, 15, 16	A
E_{AR}	Repetitive Avalanche Energy ⑤		mJ
T_J T_{STG}	Operating Junction and Storage Temperature Range	-55 to + 175	°C
	Soldering Temperature, for 10 seconds	300 (1.6mm from case)	
	Mounting Torque, 6-32 or M3 screw	10 lbf•in (1.1N•m)	

Thermal Resistance

	Parameter	Typ.	Max.	Units
$R_{\theta JC}$	Junction-to-Case ⑦	——	1.38	°C/W
$R_{\theta JA}$	Junction-to-Ambient (PCB mount) ⑦⑧	——	40	
$R_{\theta JA}$	Junction-to-Ambient ⑧	——	110	

HEXFET® is a registered trademark of International Rectifier.

09/16/10

Electrical Characteristics @ T_J = 25°C (unless otherwise specified)

	Parameter	Min.	Typ.	Max.	Units	Conditions
$V_{(BR)DSS}$	Drain-to-Source Breakdown Voltage	55	——	——	V	V_{GS} = 0V, I_D = 250μA
$\Delta V_{(BR)DSS}/\Delta T_J$	Breakdown Voltage Temp. Coefficient	——	0.053	——	V/°C	Reference to 25°C, I_D = 1mA
$R_{DS(on)}$	Static Drain-to-Source On-Resistance	——	11.1	14.5	mΩ	V_{GS} = 10V, I_D = 36A ③
$V_{GS(th)}$	Gate Threshold Voltage	2.0	——	4.0	V	V_{DS} = V_{GS}, I_D = 250μA
gfs	Forward Transconductance	20	——	——	S	V_{DS} = 25V, I_D = 36A
I_{DSS}	Drain-to-Source Leakage Current	——	——	20	μA	V_{DS} = 55V, V_{GS} = 0V
		——	——	250		V_{DS} = 55V, V_{GS} = 0V, T_J = 125°C
I_{GSS}	Gate-to-Source Forward Leakage	——	——	200	nA	V_{GS} = 20V
	Gate-to-Source Reverse Leakage	——	——	-200		V_{GS} = -20V
Q_g	Total Gate Charge	——	29	44		I_D = 36A
Q_{gs}	Gate-to-Source Charge	——	7.7	——	nC	V_{DS} = 44V
Q_{gd}	Gate-to-Drain ("Miller") Charge	——	12	——		V_{GS} = 10V ③
R_G	Gate Input Resistance	——	1.3	——	Ω	f = 1MHz, open drain
$t_{d(on)}$	Turn-On Delay Time	——	14	——		V_{DD} = 28V
t_r	Rise Time	——	66	——		I_D = 36A
$t_{d(off)}$	Turn-Off Delay Time	——	31	——	ns	R_G = 15 Ω
t_f	Fall Time	——	35	——		V_{GS} = 10V ③
L_D	Internal Drain Inductance	——	4.5	——		Between lead,
					nH	6mm (0.25in.)
L_S	Internal Source Inductance	——	7.5	——		from package
						and center of die contact
C_{iss}	Input Capacitance	——	1380	——		V_{GS} = 0V
C_{oss}	Output Capacitance	——	240	——		V_{DS} = 25V
C_{rss}	Reverse Transfer Capacitance	——	120	——	pF	f = 1.0MHz
C_{oss}	Output Capacitance	——	820	——		V_{GS} = 0V, V_{DS} = 1.0V, f = 1.0MHz
C_{oss}	Output Capacitance	——	190	——		V_{GS} = 0V, V_{DS} = 44V, f = 1.0MHz
C_{oss} eff.	Effective Output Capacitance	——	300	——		V_{GS} = 0V, V_{DS} = 0V to 44V ④

Source-Drain Ratings and Characteristics

	Parameter	Min.	Typ.	Max.	Units	Conditions
I_S	Continuous Source Current	——	——	36		MOSFET symbol
	(Body Diode)				A	showing the
I_{SM}	Pulsed Source Current	——	——	240		integral reverse
	(Body Diode) ①					p-n junction diode.
V_{SD}	Diode Forward Voltage	——	——	1.3	V	T_J = 25°C, I_S = 36A, V_{GS} = 0V ③
t_{rr}	Reverse Recovery Time	——	23	35	ns	T_J = 25°C, I_F = 36A, V_{DD} = 28V
Q_{rr}	Reverse Recovery Charge	——	16	24	nC	di/dt = 100A/μs ③
t_{on}	Forward Turn-On Time	Intrinsic turn-on time is negligible (turn-on is dominated by LS+LD)				

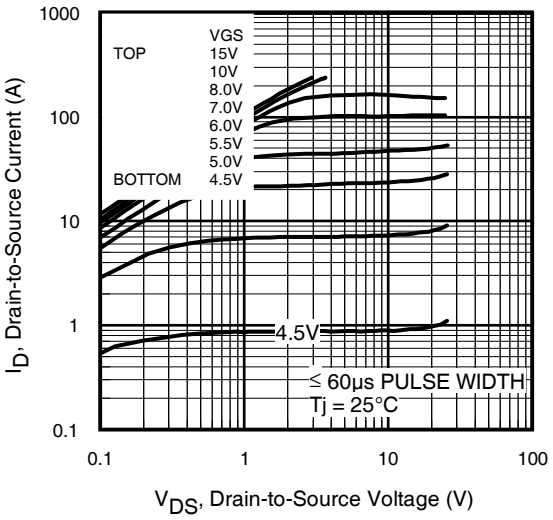

Fig 1. Typical Output Characteristics

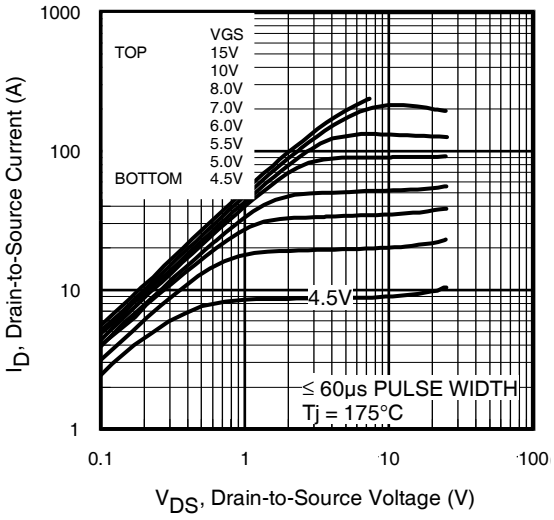

Fig 2. Typical Output Characteristics

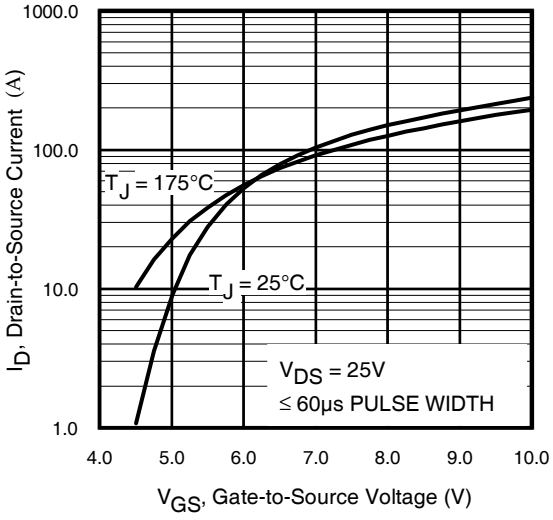

Fig 3. Typical Transfer Characteristics

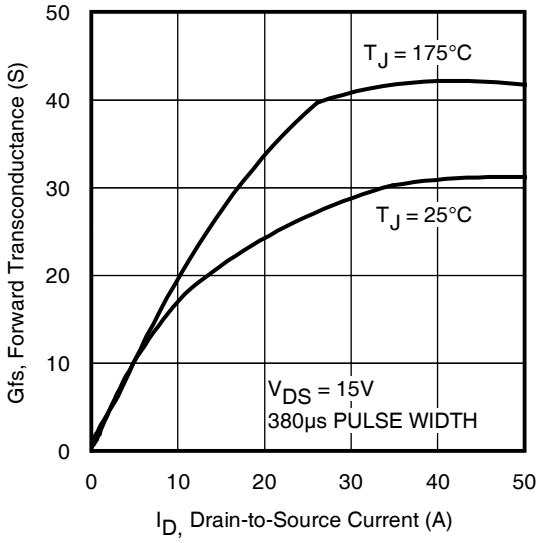

Fig 4. Typical Forward Transconductance Vs. Drain Current

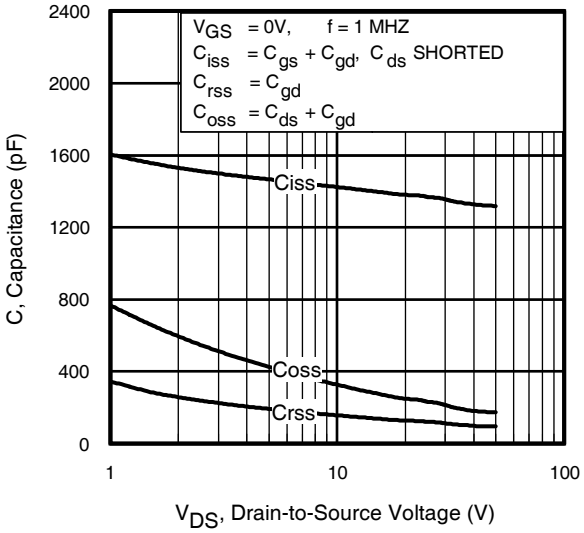

Fig 5. Typical Capacitance Vs. Drain-to-Source Voltage

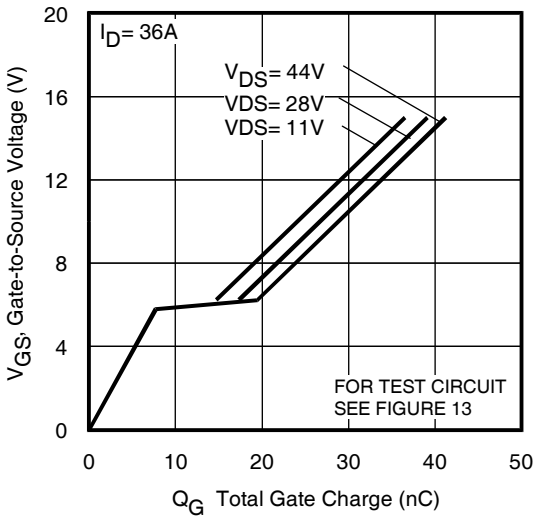

Fig 6. Typical Gate Charge Vs. Gate-to-Source Voltage

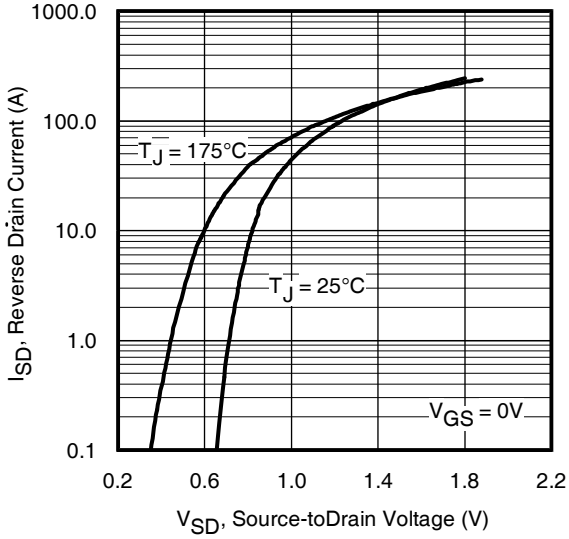

Fig 7. Typical Source-Drain Diode Forward Voltage

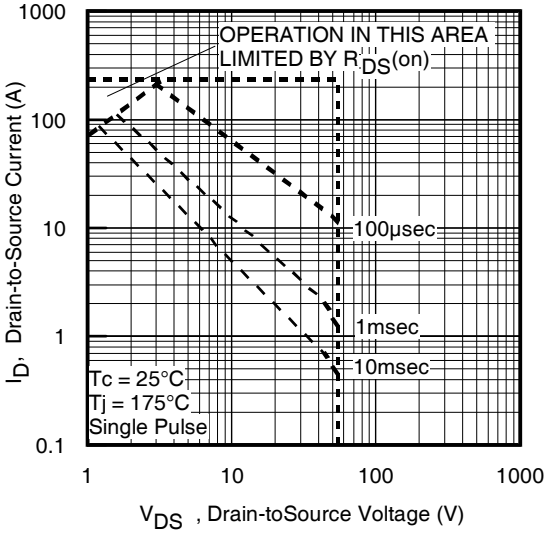

Fig 8. Maximum Safe Operating Area

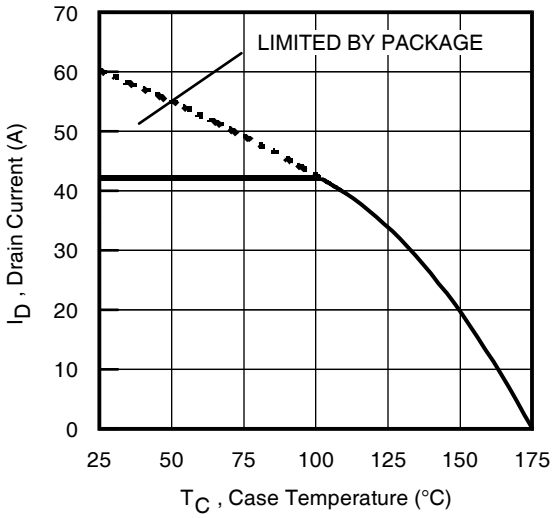

Fig 9. Maximum Drain Current Vs. Case Temperature

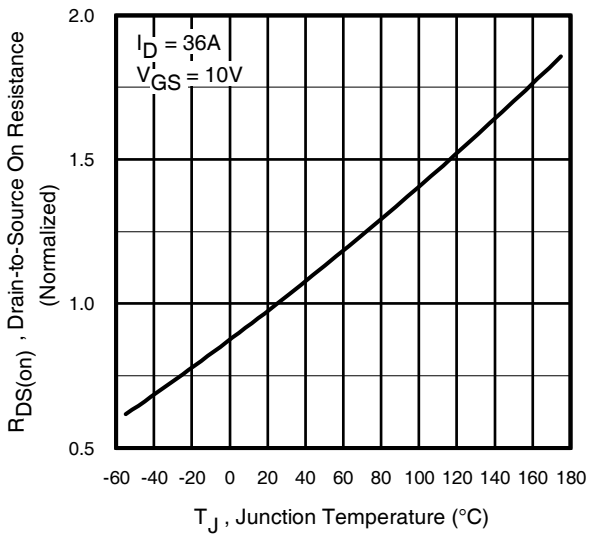

Fig 10. Normalized On-Resistance Vs. Temperature

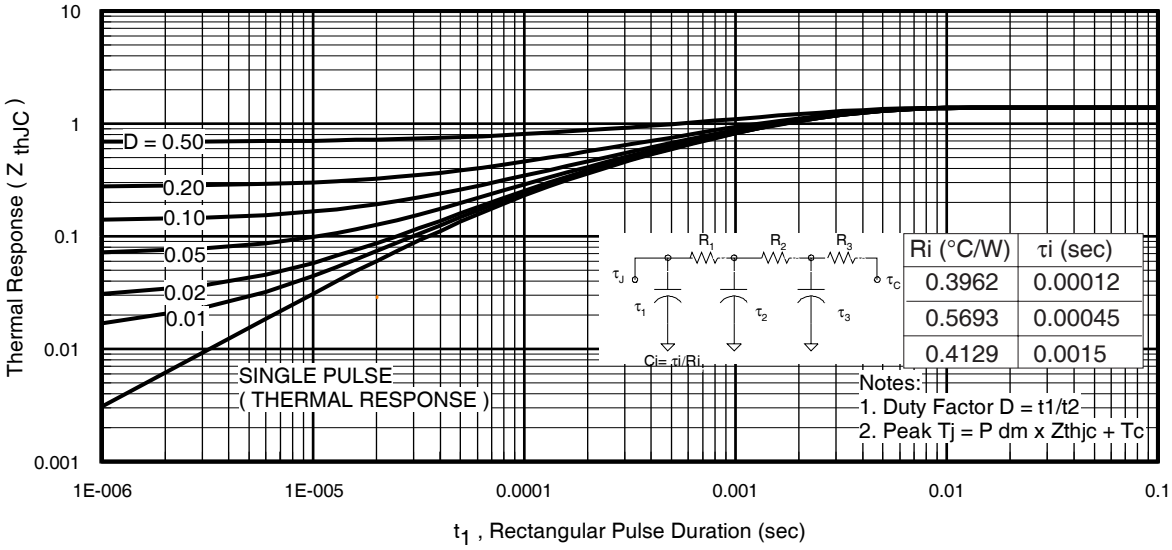

Ri (°C/W)	τi (sec)
0.3962	0.00012
0.5693	0.00045
0.4129	0.0015

Fig 11. Maximum Effective Transient Thermal Impedance, Junction-to-Case

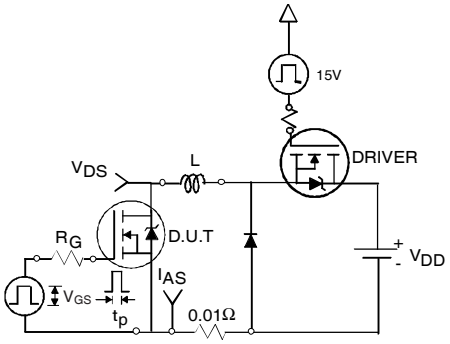

Fig 12a. Unclamped Inductive Test Circuit

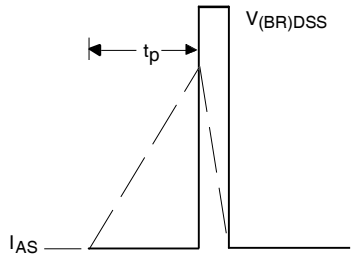

Fig 12b. Unclamped Inductive Waveforms

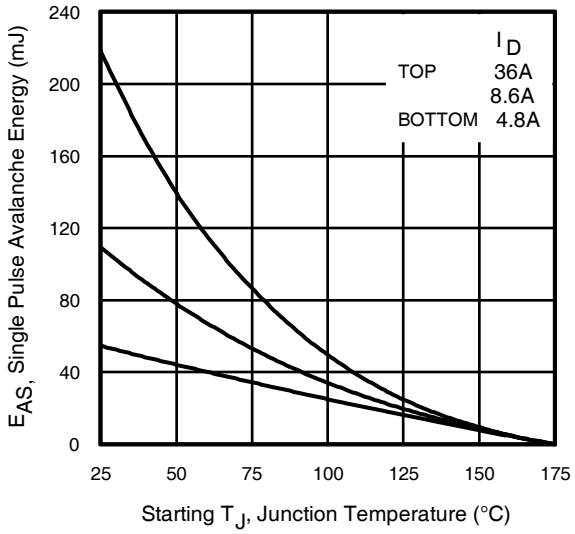

Fig 12c. Maximum Avalanche Energy Vs. Drain Current

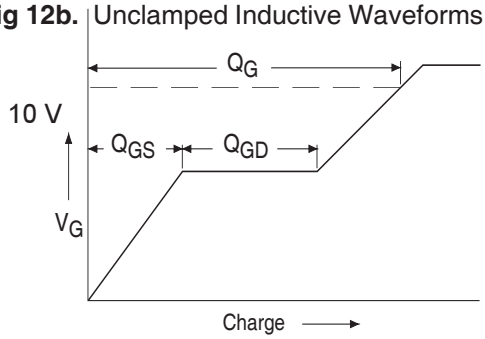

Fig 13a. Basic Gate Charge Waveform

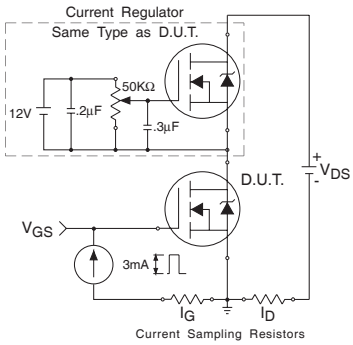

Fig 13b. Gate Charge Test Circuit

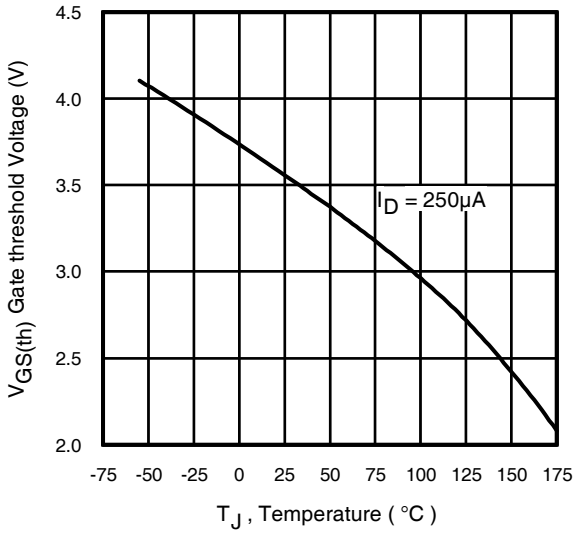

Fig 14. Threshold Voltage Vs. Temperature

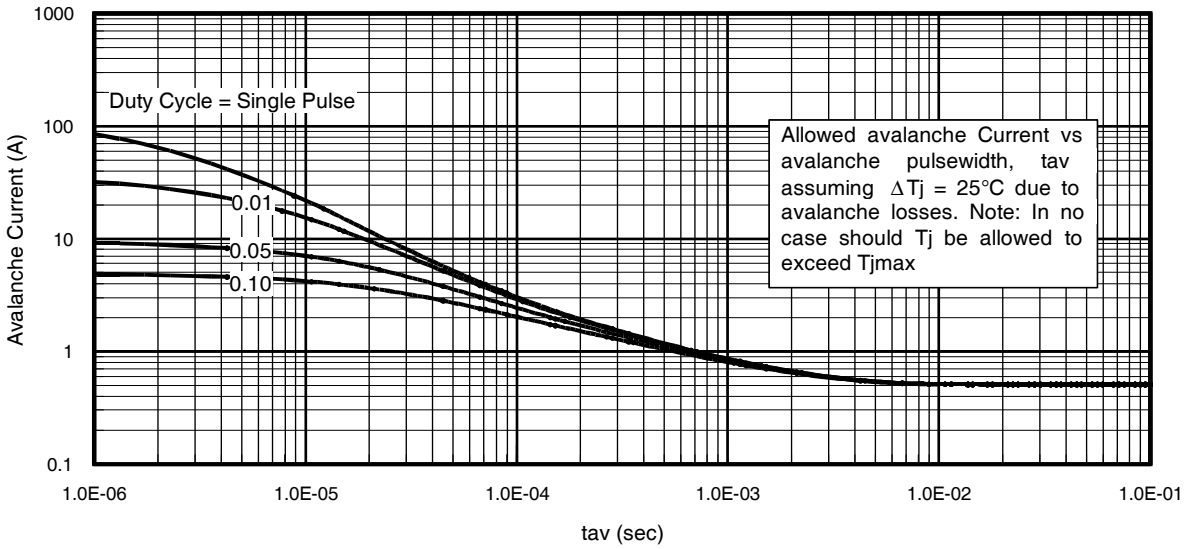

Fig 15. Typical Avalanche Current Vs.Pulsewidth

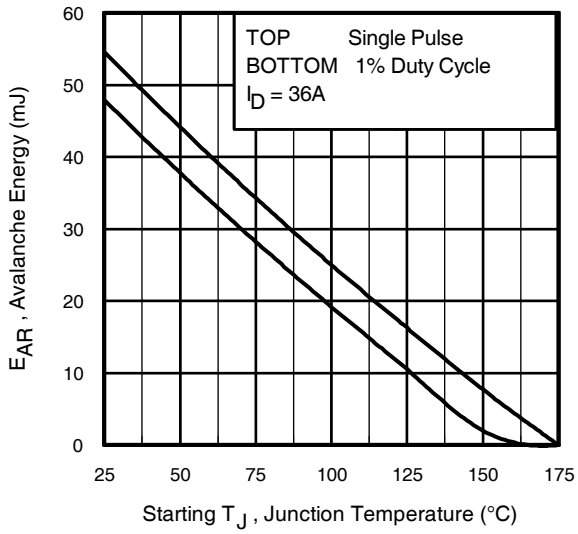

Fig 16. Maximum Avalanche Energy Vs. Temperature

Notes on Repetitive Avalanche Curves , Figures 15, 16:
(For further info, see AN-1005 at www.irf.com)

1. Avalanche failures assumption:
   Purely a thermal phenomenon and failure occurs at a temperature far in excess of T_{jmax}. This is validated for every part type.
2. Safe operation in Avalanche is allowed as long as T_{jmax} is not exceeded.
3. Equation below based on circuit and waveforms shown in Figures 12a, 12b.
4. $P_{D\ (ave)}$ = Average power dissipation per single avalanche pulse.
5. BV = Rated breakdown voltage (1.3 factor accounts for voltage increase during avalanche).
6. I_{av} = Allowable avalanche current.
7. ΔT = Allowable rise in junction temperature, not to exceed T_{jmax} (assumed as 25°C in Figure 15, 16).
   t_{av} = Average time in avalanche.
   D = Duty cycle in avalanche = $t_{av} \cdot f$
   $Z_{thJC}(D, t_{av})$ = Transient thermal resistance, see figure 11)

$$P_{D\ (ave)} = 1/2\ (1.3 \cdot BV \cdot I_{av}) = \Delta T / Z_{thJC}$$
$$I_{av} = 2\Delta T / [1.3 \cdot BV \cdot Z_{th}]$$
$$E_{AS\ (AR)} = P_{D\ (ave)} \cdot t_{av}$$

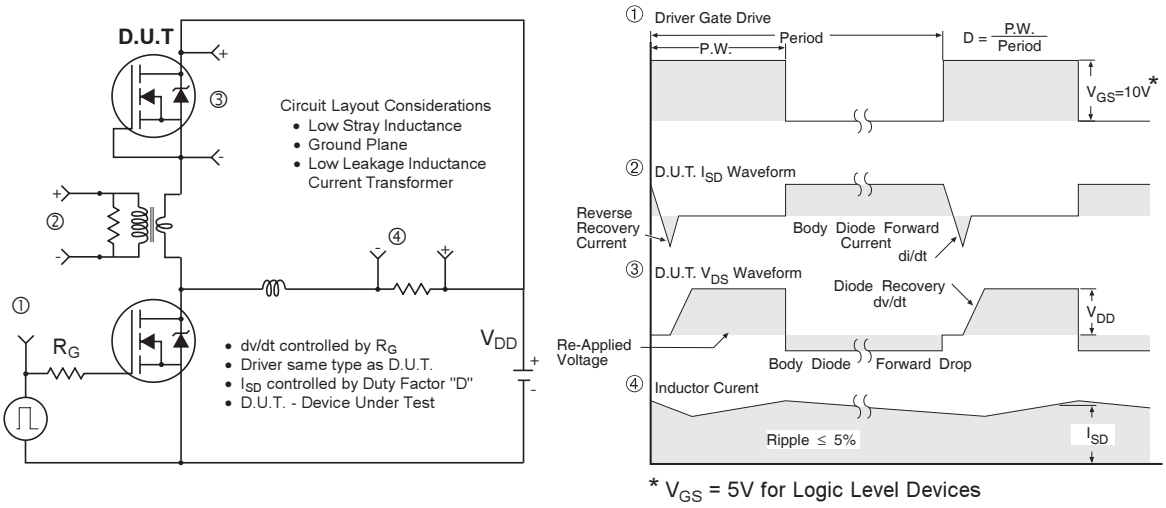

Fig 17. Peak Diode Recovery dv/dt Test Circuit for N-Channel HEXFET® Power MOSFETs

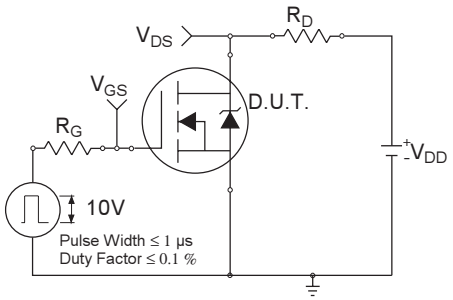

Fig 18a. Switching Time Test Circuit

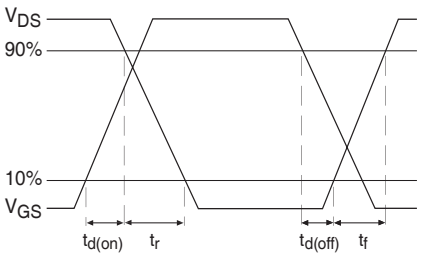

Fig 18b. Switching Time Waveforms

D-Pak (TO-252AA) Package Outline

Dimensions are shown in millimeters (inches)

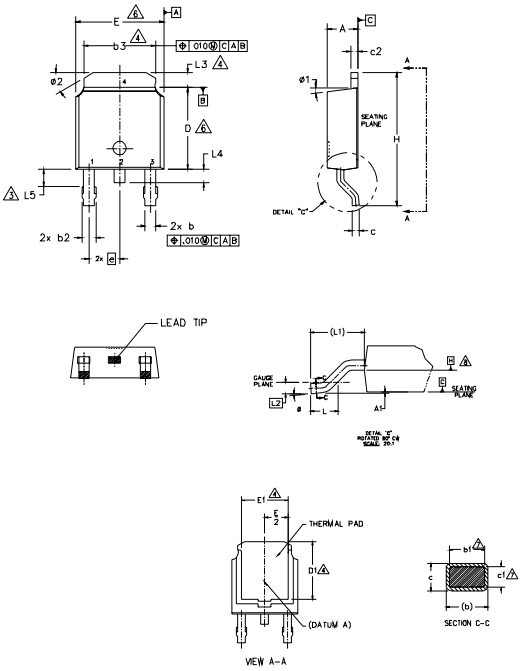

NOTES:

1.– DIMENSIONING AND TOLERANCING PER ASME Y14.5M–1994

2.– DIMENSION ARE SHOWN IN INCHES [MILLIMETERS].

3.– LEAD DIMENSION UNCONTROLLED IN L5.

4.– DIMENSION D1, E1, L3 & b3 ESTABLISH A MINIMUM MOUNTING SURFACE FOR THERMAL PAD.

5.– SECTION C–C DIMENSIONS APPLY TO THE FLAT SECTION OF THE LEAD BETWEEN .005 AND 0.10 [0.13 AND 0.25] FROM THE LEAD TIP.

6.– DIMENSION D & E DO NOT INCLUDE MOLD FLASH. MOLD FLASH SHALL NOT EXCEED .005 [0.13] PER SIDE. THESE DIMENSIONS ARE MEASURED AT THE OUTMOST EXTREMES OF THE PLASTIC BODY.

7.– DIMENSION b1 & c1 APPLIED TO BASE METAL ONLY.

8.– DATUM A & B TO BE DETERMINED AT DATUM PLANE H.

9.– OUTLINE CONFORMS TO JEDEC OUTLINE TO–252AA.

SYMBOL	DIMENSIONS				NOTES
	MILLIMETERS		INCHES		
	MIN.	MAX.	MIN.	MAX.	
A	2.18	2.39	.086	.094	
A1	–	0.13	–	.005	
b	0.64	0.89	.025	.035	
b1	0.65	0.79	.025	.031	7
b2	0.76	1.14	.030	.045	
b3	4.95	5.46	.195	.215	4
c	0.46	0.61	.018	.024	
c1	0.41	0.56	.016	.022	7
c2	0.46	0.89	.018	.035	
D	5.97	6.22	.235	.245	6
D1	5.21	–	.205	–	4
E	6.35	6.73	.250	.265	6
E1	4.32	–	.170	–	4
e	2.29 BSC		.090 BSC		
H	9.40	10.41	.370	.410	
L	1.40	1.78	.055	.070	
L1	2.74 BSC		.108 REF.		
L2	0.51 BSC		.020 BSC		
L3	0.89	1.27	.035	.050	4
L4	–	1.02	–	.040	
L5	1.14	1.52	.045	.060	3
ø	0°	10°	0°	10°	
ø1	0°	15°	0°	15°	
ø2	25°	35°	25°	35°	

LEAD ASSIGNMENTS

HEXFET

1.– GATE
2.– DRAIN
3.– SOURCE
4.– DRAIN

IGBT & CoPAK

1.– GATE
2.– COLLECTOR
3.– EMITTER
4.– COLLECTOR

D-Pak (TO-252AA) Part Marking Information

EXAMPLE: THIS IS AN IRFR120
WITH ASSEMBLY
LOT CODE 1234
ASSEMBLED ON WW 16, 2001
IN THE ASSEMBLY LINE "A"

Note: "P" in assembly line position indicates "Lead-Free"

"$\bar{P}$" in assembly line position indicates "Lead-Free" qualification to the consumer-level

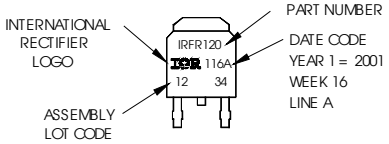

OR

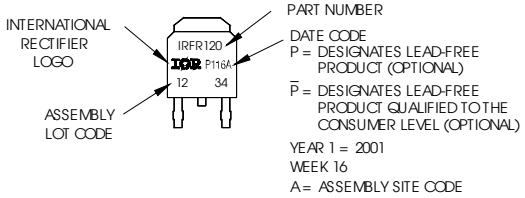

Notes:

1. For an Automotive Qualified version of this part please seehttp://www.irf.com/product-info/auto/

2. For the most current drawing please refer to IR website at http://www.irf.com/package/

I-Pak (TO-251AA) Package Outline

Dimensions are shown in millimeters (inches)

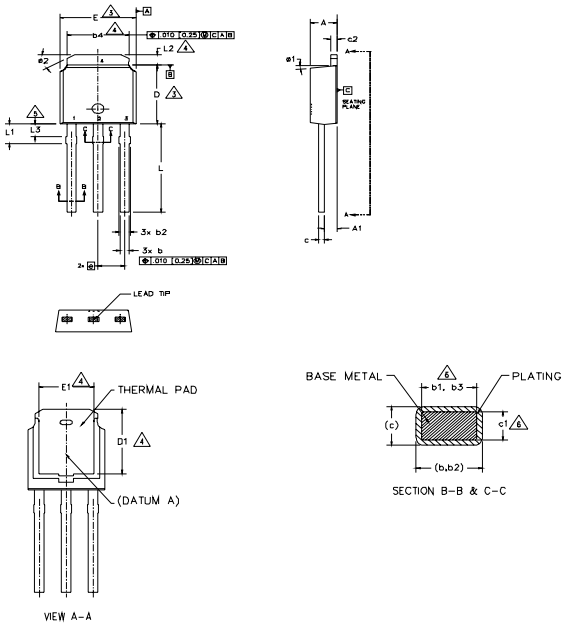

NOTES:

1.- DIMENSIONING AND TOLERANCING PER ASME Y14.5M-1994

2.- DIMENSION ARE SHOWN IN INCHES [MILLIMETERS].

3. DIMENSION D & E DO NOT INCLUDE MOLD FLASH. MOLD FLASH SHALL NOT EXCEED .005 [0.13] PER SIDE. THESE DIMENSIONS ARE MEASURED AT THE OUTMOST EXTREMES OF THE PLASTIC BODY.

4.- THERMAL PAD CONTOUR OPTION WITHIN DIMENSION b4, L2, E1 & D1.

5.- LEAD DIMENSION UNCONTROLLED IN L3.

6.- DIMENSION b1, b3 & c1 APPLY TO BASE METAL ONLY.

7.- OUTLINE CONFORMS TO JEDEC OUTLINE TO-251AA (Date 06/02).

8.- CONTROLLING DIMENSION : INCHES.

SYMBOL	DIMENSIONS				NOTES
	MILLIMETERS		INCHES		
	MIN.	MAX.	MIN.	MAX.	
A	2.18	2.39	.086	.094	
A1	0.89	1.14	.035	.045	
b	0.64	0.89	.025	.035	
b1	0.65	0.79	.025	.031	6
b2	0.76	1.14	.030	.045	
b3	0.76	1.04	.030	.041	6
b4	4.95	5.46	.195	.215	4
c	0.46	0.61	.018	.024	
c1	0.41	0.56	.016	.022	6
c2	0.46	0.89	.018	.035	
D	5.97	6.22	.235	.245	3
D1	5.21	–	.205	–	4
E	6.35	6.73	.250	.265	3
E1	4.32	–	.170	–	4
e	2.29 BSC		.090 BSC		
L	8.89	9.65	.350	.380	
L1	1.91	2.29	.045	.090	
L2	0.89	1.27	.035	.050	4
L3	1.14	1.52	.045	.060	5
ø1	0°	15°	0°	15°	
ø2	25°	35°	25°	35°	

LEAD ASSIGNMENTS

HEXFET

1.- GATE
2.- DRAIN
3.- SOURCE
4.- DRAIN

I-Pak (TO-251AA) Part Marking Information

EXAMPLE: THIS IS AN IRFU120
WITH ASSEMBLY
LOT CODE 5678
ASSEMBLED ON WW 19, 2001
IN THE ASSEMBLY LINE "A"

Note: "P" in assembly line position indicates Lead-Free"

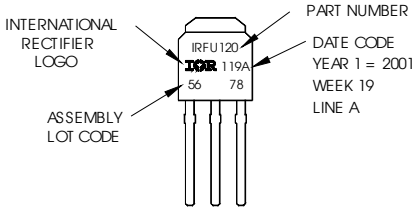

OR

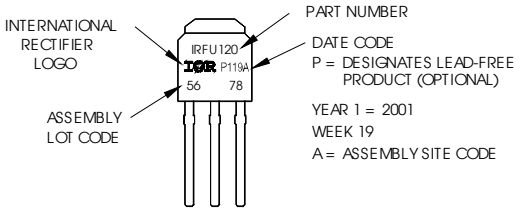

Notes:

1. For an Automotive Qualified version of this part please seehttp://www.irf.com/product-info/auto/

2. For the most current drawing please refer to IR website at http://www.irf.com/package/

D-Pak (TO-252AA) Tape & Reel Information

Dimensions are shown in millimeters (inches)

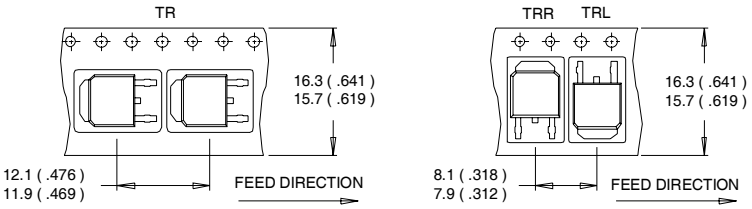

NOTES :
1. CONTROLLING DIMENSION : MILLIMETER.
2. ALL DIMENSIONS ARE SHOWN IN MILLIMETERS (INCHES).
3. OUTLINE CONFORMS TO EIA-481 & EIA-541.

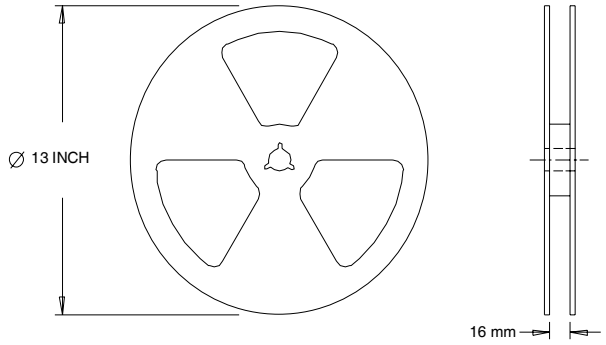

NOTES :
1. OUTLINE CONFORMS TO EIA-481.

Notes:

① Repetitive rating; pulse width limited by max. junction temperature. (See fig. 11).

② Limited by T_{Jmax}, starting $T_J = 25°C$, L = 0.08mH $R_G = 25\Omega$, $I_{AS} = 36A$, $V_{GS} = 10V$. Part not recommended for use above this value.

③ Pulse width ≤ 1.0ms; duty cycle ≤ 2%.

④ C_{oss} eff. is a fixed capacitance that gives the same charging time as C_{oss} while V_{DS} is rising from 0 to 80% V_{DSS} .

⑤ Limited by T_{Jmax} , see Fig.12a, 12b, 15, 16 for typical repetitive avalanche performance.

⑥ This value determined from sample failure population. 100% tested to this value in production.

⑦ When mounted on 1" square PCB (FR-4 or G-10 Material) . For recommended footprint and soldering techniques refer to application note #AN-994

⑧ R_θ is measured at T_J approximately 90°C

Data and specifications subject to change without notice.
This product has been designed and qualified for the Industrial market.
Qualification Standards can be found on IR's Web site.

International
IOR Rectifier

IR WORLD HEADQUARTERS: 233 Kansas St., El Segundo, California 90245, USA Tel: (310) 252-7105
TAC Fax: (310) 252-7903
Visit us at www.irf.com for sales contact information.09/2010

IMPORTANT NOTICE

The information given in this document shall in no event be regarded as a guarantee of conditions or characteristics ("Beschaffenheitsgarantie") .

With respect to any examples, hints or any typical values stated herein and/or any information regarding the application of the product, Infineon Technologies hereby disclaims any and all warranties and liabilities of any kind, including without limitation warranties of non-infringement of intellectual property rights of any third party.

In addition, any information given in this document is subject to customer's compliance with its obligations stated in this document and any applicable legal requirements, norms and standards concerning customer's products and any use of the product of Infineon Technologies in customer's applications.

The data contained in this document is exclusively intended for technically trained staff. It is the responsibility of customer's technical departments to evaluate the suitability of the product for the intended application and the completeness of the product information given in this document with respect to such application.

For further information on the product, technology, delivery terms and conditions and prices please contact your nearest Infineon Technologies office (**www.infineon.com**).

WARNINGS

Due to technical requirements products may contain dangerous substances. For information on the types in question please contact your nearest Infineon Technologies office.

Except as otherwise explicitly approved by Infineon Technologies in a written document signed by authorized representatives of Infineon Technologies, Infineon Technologies' products may not be used in any applications where a failure of the product or any consequences of the use thereof can reasonably be expected to result in personal injury.

Mouser Electronics

Authorized Distributor

Click to View Pricing, Inventory, Delivery & Lifecycle Information:

Infineon:

IRFR2905ZPBF IRFR2905ZTRLPBF IRFR2905ZTRPBF