42V, 5A/7A Peak Synchronous Step-Down Silent Switcher with 2.5μA Quiescent Current

FEATURES

- **Silent Switcher® Architecture**
  - **Ultralow EMI Emissions**
  - **Optional Spread Spectrum Modulation**
- **High Efficiency at High Frequency**
  - **Up to 96% Efficiency at 1MHz, $12V_{IN}$ to $5V_{OUT}$**
  - **Up to 95% Efficiency at 2MHz, $12V_{IN}$ to $5V_{OUT}$**
- **Wide Input Voltage Range: 3.4V to 42V**
- **5A Maximum Continuous, 7A Peak Transient Output**
- **Ultralow Quiescent Current Burst Mode® Operation**
  - **2.5μA I_Q Regulating $12V_{IN}$ to $3.3V_{OUT}$ (LT8636)**
  - **Output Ripple < $10mV_{P-P}$**
- **External Compensation: Fast Transient Response and Current Sharing (LT8637)**
- Fast Minimum Switch On-Time: 30ns
- Low Dropout Under All Conditions: 100mV at 1A
- Forced Continuous Mode
- Adjustable and Synchronizable: 200kHz to 3MHz
- Output Soft-Start and Power Good
- Small 20-Lead 4mm × 3mm LQFN Package
- AEC-Q100 Qualified for Automotive Applications

APPLICATIONS

- Automotive and Industrial Supplies
- General Purpose Step-Down

DESCRIPTION

The LT®8636/LT8637 synchronous step-down regulator features Silent Switcher architecture designed to minimize EMI emissions while delivering high efficiency at high switching frequencies. Peak current mode control with a 30ns minimum on-time allows high step-down ratios even at high switching frequencies.

The LT8636's ultralow 2.5μA quiescent current—with the output in full regulation—enables applications requiring highest efficiency at very small load currents. The LT8637 has external compensation to enable current sharing and fast transient response at high switching frequencies. A CLKOUT pin enables synchronizing other regulators to the LT8636/LT8637.

Burst Mode operation enables ultralow standby current consumption, forced continuous mode can control frequency harmonics across the entire output load range, or spread spectrum operation can further reduce EMI emissions. Soft-start and tracking functionality is accessed via the TR/SS pin, and an accurate input voltage UVLO threshold can be set using the EN/UV pin.

All registered trademarks and trademarks are the property of their respective owners. Protected by U.S. patents, including 8823345.

TYPICAL APPLICATION

5V, 5A Step-Down Converter

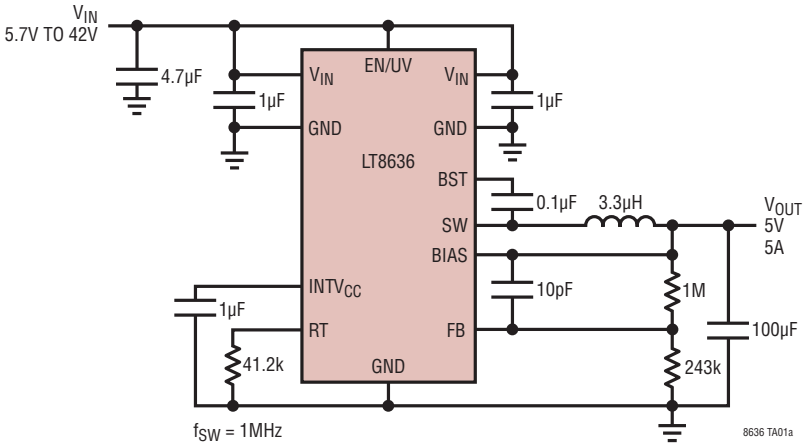

$12V_{IN}$ to $5V_{OUT}$ Efficiency

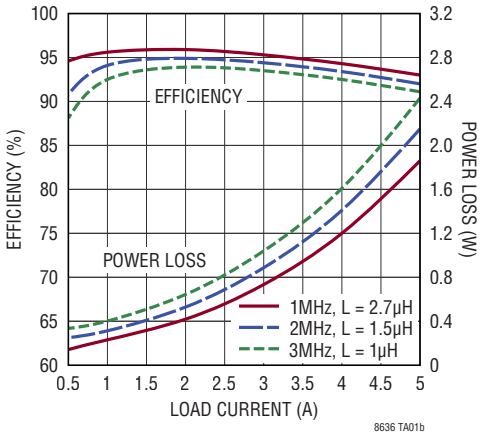

Rev. E

ABSOLUTE MAXIMUM RATINGS

(Note 1)

V_{IN}, EN/UV, PG.....42V
BIAS.....25V
FB, TR/SS 4V
SYNC/MODE Voltage 6V

Operating Junction Temperature Range (Note 2)
LT8636E/LT8637E ..... –40°C to 125°C
LT8636J/LT8637J ..... –40°C to 150°C
LT8636H ..... –40°C to 150°C
LT8636MP ..... –55°C to 150°C
Storage Temperature Range ..... –65°C to 150°C
Maximum Reflow (Package Body) Temperature..... 260°C

PIN CONFIGURATION

LT8636

TOP VIEW

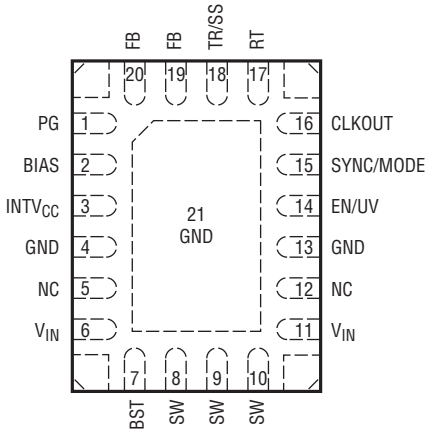

LQFN PACKAGE
20-LEAD (4mm × 3mm × 0.94mm)
JEDEC BOARD: θ_{JA} = 41°C/W, $\theta_{JC(top)}$ = 50.6°C/W, $\theta_{JC(pad)}$ = 8.0°C/W, (NOTE 3)
DEMO BOARD: θ_{JA} = 26°C/W, Ψ_{JT} = 0.8°C/W
EXPOSED PAD (PIN 21) IS GND, SHOULD BE SOLDERED TO PCB

LT8637

TOP VIEW

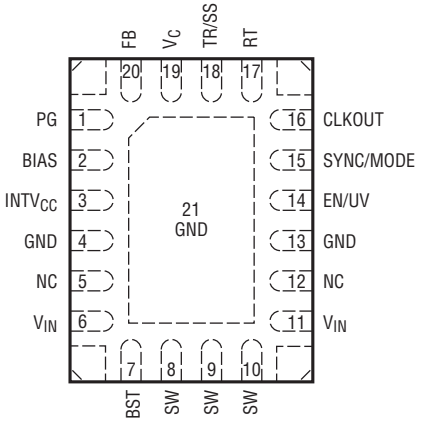

LQFN PACKAGE
20-LEAD (4mm × 3mm × 0.94mm)
JEDEC BOARD: θ_{JA} = 41°C/W, $\theta_{JC(top)}$ = 50.6°C/W, $\theta_{JC(pad)}$ = 8.0°C/W, (NOTE 3)
DEMO BOARD: θ_{JA} = 26°C/W, Ψ_{JT} = 0.8°C/W
EXPOSED PAD (PIN 21) IS GND, SHOULD BE SOLDERED TO PCB

ORDER INFORMATION

PART NUMBER	PART MARKING*	FINISH CODE	PAD FINISH	PACKAGE TYPE**	MSL RATING	TEMPERATURE RANGE
LT8636EV#PBF	8636	e4	Au (RoHS)	LQFN (Laminate Package with QFN Footprint)	3	–40°C to 125°C
LT8636JV#PBF						–40°C to 150°C
LT8636HV#PBF						–40°C to 150°C
LT8636MPV#PBF						–55°C to 150°C
LT8637EV#PBF	8637					–40°C to 125°C
LT8637JV#PBF						–40°C to 150°C

Rev. E

ORDER INFORMATION

PART NUMBER	PART MARKING*	FINISH CODE	PAD FINISH	PACKAGE TYPE**	MSL RATING	TEMPERATURE RANGE
AUTOMOTIVE PRODUCTS* **						
LT8636EV#WPBF	8636	e4	Au (RoHS)	LQFN (Laminate Package with QFN Footprint)	3	–40°C to 125°C
LT8636JV#WPBF						–40°C to 150°C
LT8636JV#WTRPBF						–40°C to 150°C
LT8636HV#WPBF						–40°C to 150°C
LT8637EV#WPBF	8637					–40°C to 125°C
LT8637JV#WPBF						–40°C to 150°C

- Contact the factory for parts specified with wider operating temperature ranges. *Device temperature grade is identified by a label on the shipping container.
- Pad finish code is per IPC/JEDEC J-STD-609.
- Recommended PCB Assembly and Manufacturing Procedures
- Package and Tray Drawings

Parts ending with PBF are RoHS and WEEE compliant. **The LT8636/LT8637 package has the same dimensions as a standard 4mm × 3mm QFN package.

***Versions of this part are available with controlled manufacturing to support the quality and reliability requirements of automotive applications. These models are designated with a #W suffix. Only the automotive grade products shown are available for use in automotive applications. Contact your local Analog Devices account representative for specific product ordering information and to obtain the specific Automotive Reliability reports for these models.

ELECTRICAL CHARACTERISTICS

The ● denotes the specifications which apply over the full operating temperature range, otherwise specifications are at T_A = 25°C.

PARAMETER	CONDITIONS		MIN	TYP	MAX	UNITS
Minimum Input Voltage		●		3.0	3.4	V
V_{IN} Quiescent Current in Shutdown	$V_{EN/UV}$ = 0V	 ●		1 1	3 10	µA µA
LT8636 V_{IN} Quiescent Current in Sleep (Internal Compensation)	$V_{EN/UV}$ = 2V, V_{FB} > 0.97V, V_{SYNC} = 0V	 ●		1.7 1.7	4 10	µA µA
LT8637 V_{IN} Quiescent Current in Sleep (External Compensation)	$V_{EN/UV}$ = 2V, V_{FB} > 0.97V, V_{SYNC} = 0V, V_{BIAS} = 0V	 ●		230 230	290 340	µA µA
	$V_{EN/UV}$ = 2V, V_{FB} > 0.97V, V_{SYNC} = 0V, V_{BIAS} = 5V			19	25	µA
LT8637 BIAS Quiescent Current in Sleep	$V_{EN/UV}$ = 2V, V_{FB} > 0.97V, V_{SYNC} = 0V, V_{BIAS} = 5V			200	260	µA
LT8636 V_{IN} Current in Regulation	V_{OUT} = 0.97V, V_{IN} = 6V, I_{LOAD} = 1mA, V_{SYNC} = 0			220	390	µA
Feedback Reference Voltage	V_{IN} = 6V V_{IN} = 6V	 ●	0.966 0.956	0.970 0.970	0.974 0.982	V V
Feedback Voltage Line Regulation	V_{IN} = 4.0V to 36V	●		0.004	0.02	%/V
Feedback Pin Input Current	V_{FB} = 1V		–20		20	nA
LT8637 Error Amp Transconductance	V_C = 1.25V			1.7		mS
LT8637 Error Amp Gain				260		
LT8637 V_C Source Current	V_{FB} = 0.77V, V_C = 1.25V			350		µA
LT8637 V_C Sink Current	V_{FB} = 1.17V, V_C = 1.25V			350		µA
LT8637 V_C Pin to Switch Current Gain				5		A/V
LT8637 V_C Clamp Voltage				2.6		V
BIAS Pin Current Consumption	V_{BIAS} = 3.3V, f_{SW} = 2MHz			14		mA

ELECTRICAL CHARACTERISTICS

The ● denotes the specifications which apply over the full operating temperature range, otherwise specifications are at T_A = 25°C.

PARAMETER	CONDITIONS		MIN	TYP	MAX	UNITS
Minimum On-Time	I_{LOAD} = 1.5A, SYNC = 0V I_{LOAD} = 1.5A, SYNC = 2V	● ●		30 30	50 45	ns ns
Minimum Off-Time				80	110	ns
Oscillator Frequency	R_T = 221k R_T = 60.4k R_T = 18.2k	● ● ●	180 665 1.8	210 700 1.95	240 735 2.1	kHz kHz MHz
Top Power NMOS On-Resistance	I_{SW} = 1A			66		mΩ
Top Power NMOS Current Limit		●	7.5	10	12.5	A
Bottom Power NMOS On-Resistance	V_{INTVCC} = 3.4V, I_{SW} = 1A			27		mΩ
SW Leakage Current	V_{IN} = 42V, V_{SW} = 0V, 42V		–3		3	µA
EN/UV Pin Threshold	EN/UV Rising	●	0.94	1.0	1.06	V
EN/UV Pin Hysteresis				40		mV
EN/UV Pin Current	$V_{EN/UV}$ = 2V		–20		20	nA
PG Upper Threshold Offset from V_{FB}	V_{FB} Falling	●	5	7.5	10.25	%
PG Lower Threshold Offset from V_{FB}	V_{FB} Rising	●	–10.75	–8	–5.25	%
PG Hysteresis				0.2		%
PG Leakage	V_{PG} = 3.3V		–80		80	nA
PG Pull-Down Resistance	V_{PG} = 0.1V	●		700	2000	Ω
SYNC/MODE Threshold	SYNC/MODE DC and Clock Low Level Voltage SYNC/MODE Clock High Level Voltage SYNC/MODE DC High Level Voltage	● ● ●	0.7 2.2	0.9 1.2 2.55	 1.4 2.9	V V V
Spread Spectrum Modulation Frequency Range	R_T = 60.4k, V_{SYNC} = 3.3V			22		%
Spread Spectrum Modulation Frequency	V_{SYNC} = 3.3V			3		kHz
TR/SS Source Current		●	1.2	1.9	2.6	µA
TR/SS Pull-Down Resistance	Fault Condition, TR/SS = 0.1V			200		Ω
V_{IN} to Disable Forced Continuous Mode	V_{IN} Rising		35	37	39	V

Note 1: Stresses beyond those listed under Absolute Maximum Ratings may cause permanent damage to the device. Exposure to any Absolute Maximum Rating condition for extended periods may affect device reliability and lifetime.

Note 2: The LT8636E is guaranteed to meet performance specifications from 0°C to 125°C junction temperature. Specifications over the –40°C to 125°C operating junction temperature range are assured by design, characterization, and correlation with statistical process controls. The LT8636J and LT8636H are guaranteed over the full –40°C to 150°C operating junction temperature range. High junction temperatures degrade operating lifetimes. The LT8636MP is 100% tested and guaranteed over the full –55°C to 150°C operating junction temperature range. Operating lifetime is derated at junction temperatures greater than 125°C. The junction temperature (T_J, in °C) is calculated from the ambient temperature (T_A in °C) and power dissipation (PD, in Watts) according to the formula:

$$T_J = T_A + (PD \bullet \theta_{JA})$$

where θ_{JA} (in °C/W) is the package thermal impedance.

Note 3: θ values determined per JEDEC 51-7, 51-12. See the Applications Information section for information on improving the thermal resistance and for actual temperature measurements of a demo board in typical operating conditions.

Note 4: This IC includes overtemperature protection that is intended to protect the device during overload conditions. Junction temperature will exceed 150°C when overtemperature protection is active. Continuous operation above the specified maximum operating junction temperature will reduce lifetime.

TYPICAL PERFORMANCE CHARACTERISTICS

$12V_{IN}$ to $5V_{OUT}$ Efficiency vs Frequency

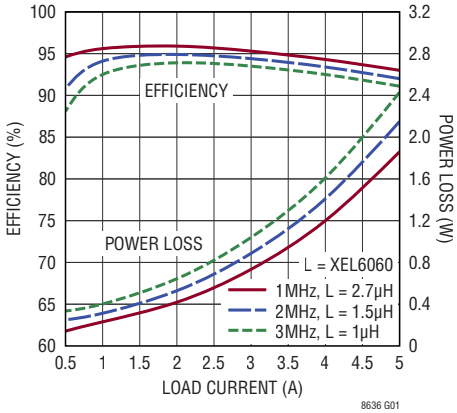

$12V_{IN}$ to $3.3V_{OUT}$ Efficiency vs Frequency

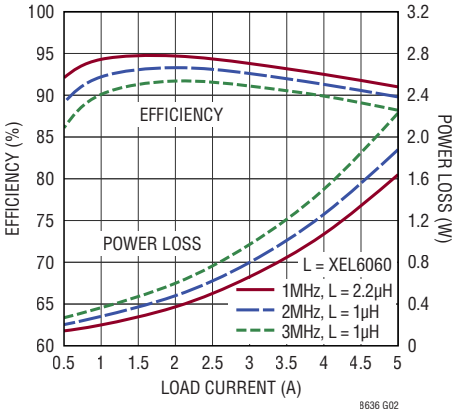

Efficiency at $5V_{OUT}$

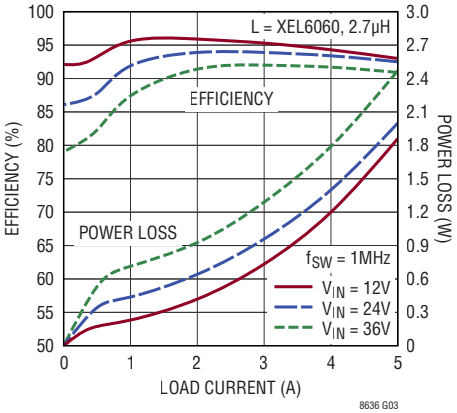

Efficiency at $3.3V_{OUT}$

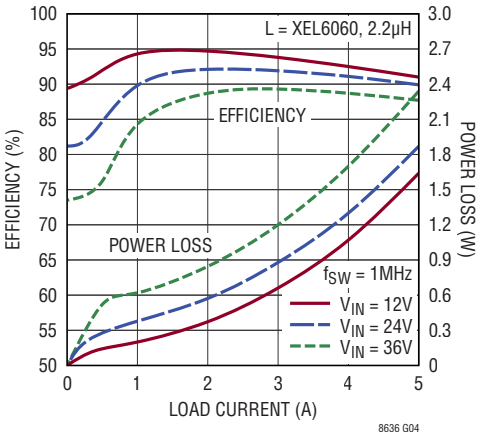

LT8636 Low Load Efficiency at $5V_{OUT}$

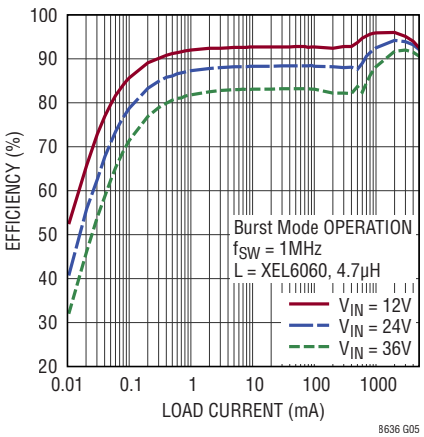

LT8637 Low Load Efficiency at $5V_{OUT}$

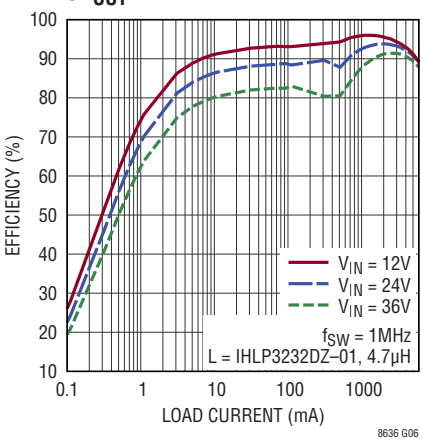

LT8636 Low Load Efficiency at $3.3V_{OUT}$

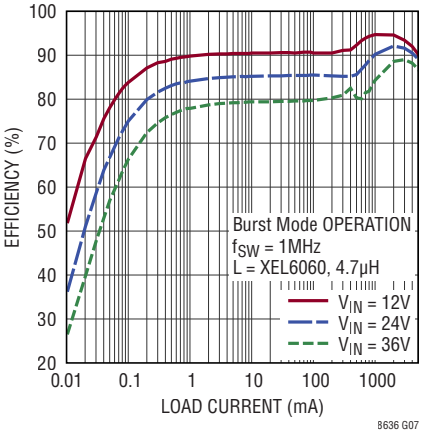

LT8637 Low Load Efficiency at $3.3V_{OUT}$

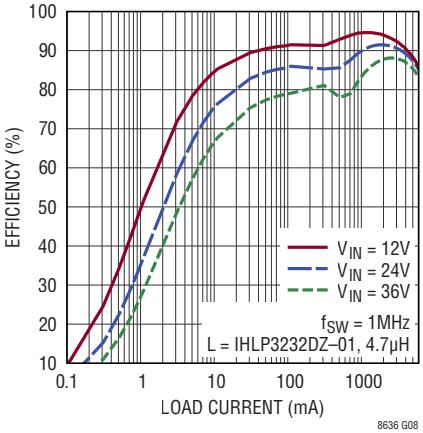

Efficiency vs Frequency

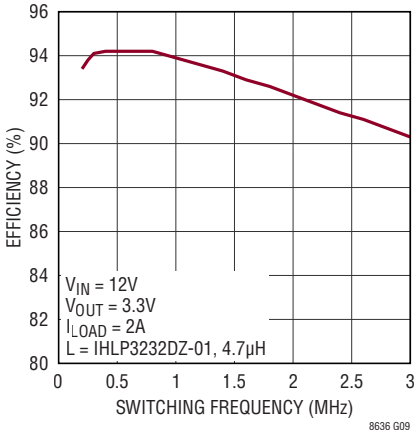

TYPICAL PERFORMANCE CHARACTERISTICS

Burst Mode Operation Efficiency vs Inductor Value (LT8636)

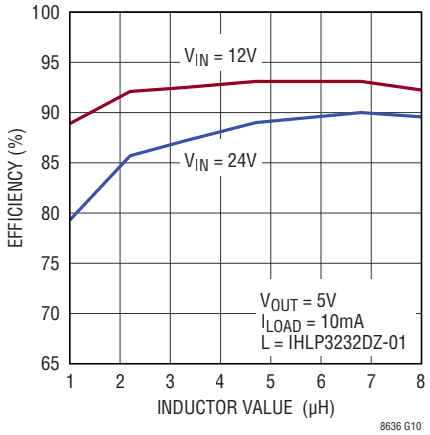

Reference Voltage

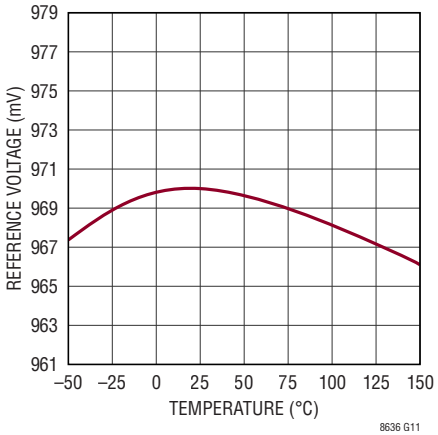

EN Pin Thresholds

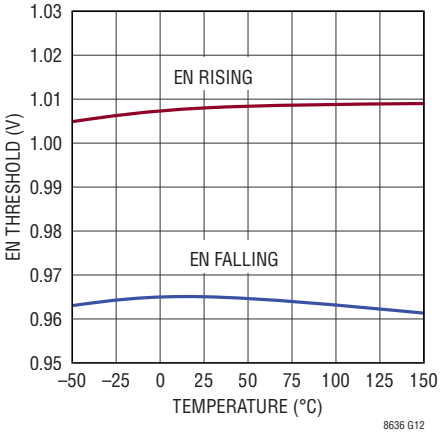

LT8636 Load Regulation

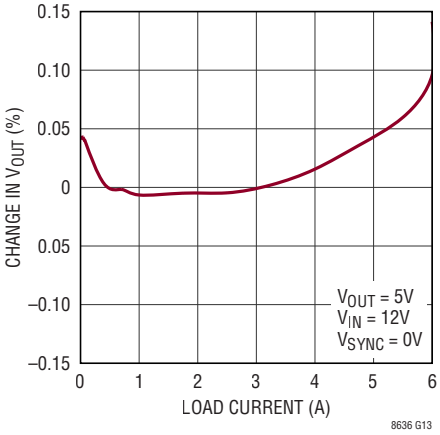

LT8637 Load Regulation

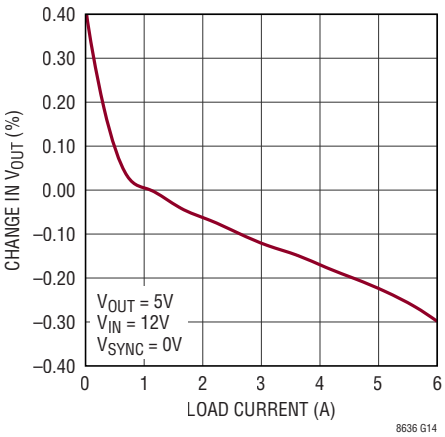

LT8636 Line Regulation

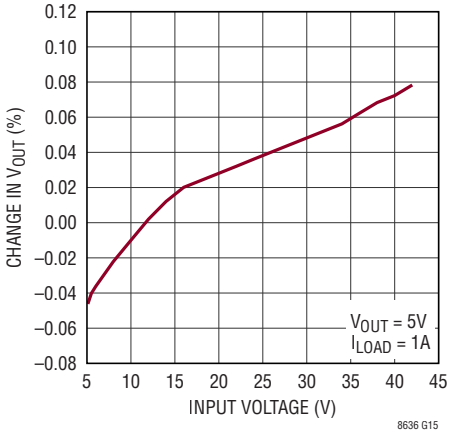

LT8637 Line Regulation

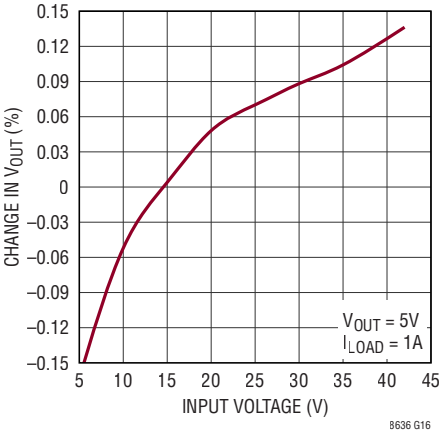

LT8636 No-Load Supply Current

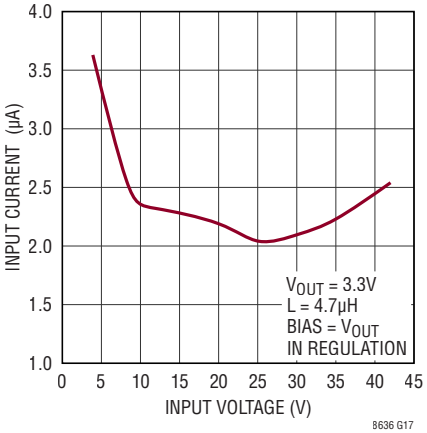

LT8637 No-Load Supply Current

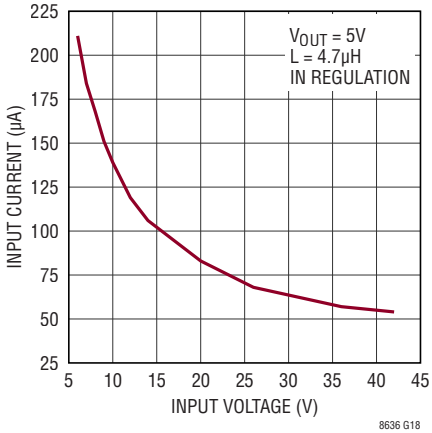

TYPICAL PERFORMANCE CHARACTERISTICS

Top FET Current Limit vs Duty Cycle

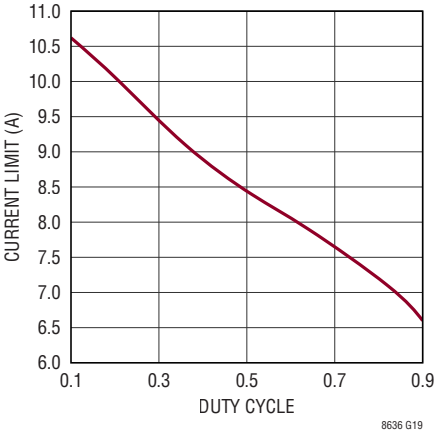

Top FET Current Limit

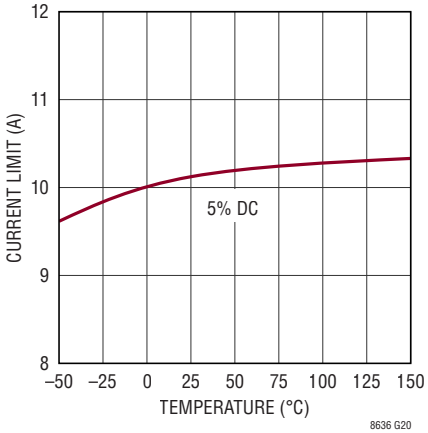

Switch Drop vs Temperature

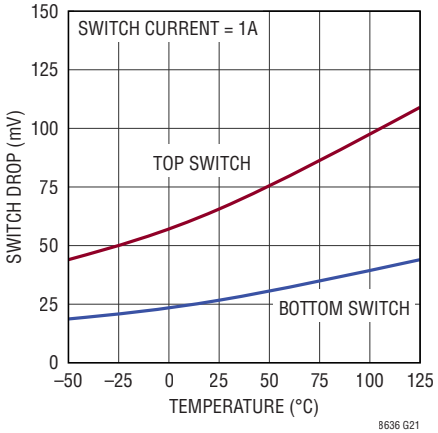

Switch Drop vs Switch Current

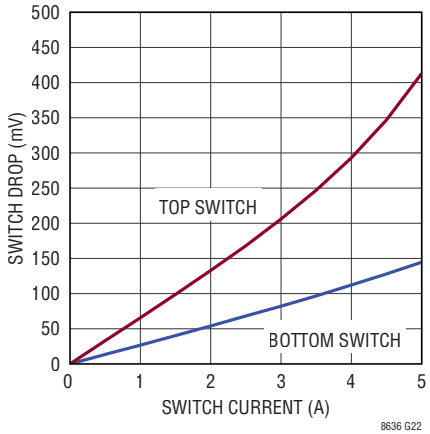

Dropout Voltage

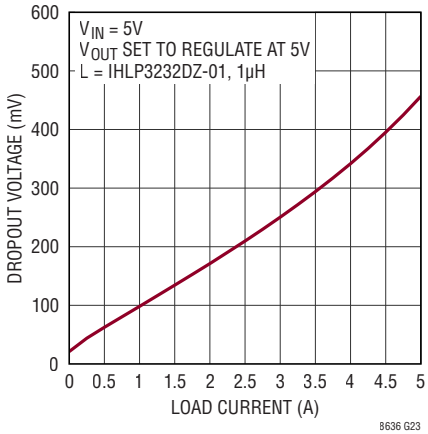

Minimum On-Time

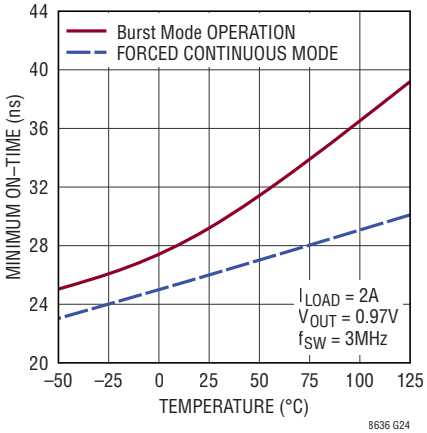

Switching Frequency

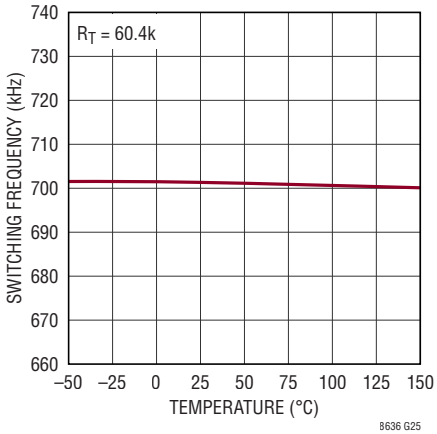

Burst Frequency

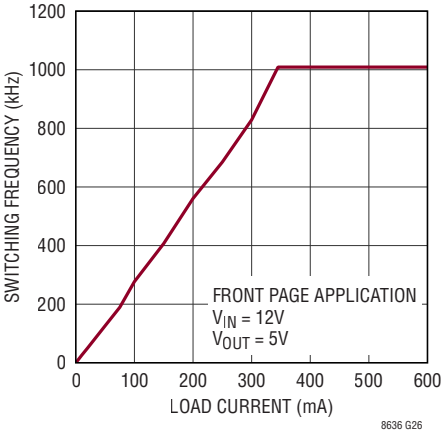

LT8636 Soft-Start Tracking

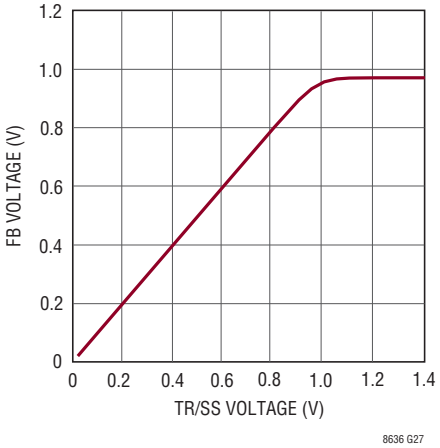

TYPICAL PERFORMANCE CHARACTERISTICS

LT8637 Soft-Start Tracking

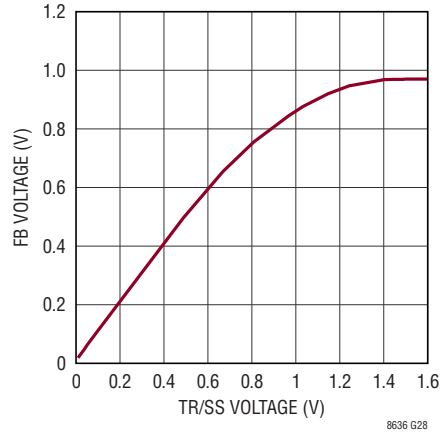

Soft-Start Current

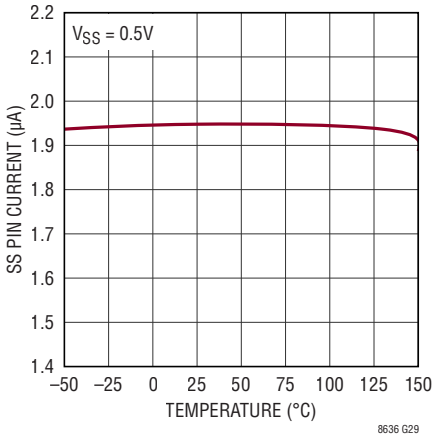

LT8637 Error Amp Output Current

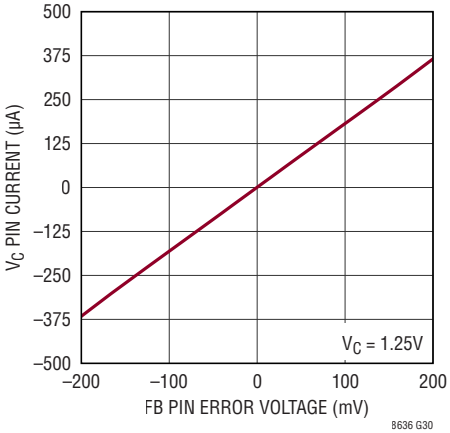

PG High Thresholds

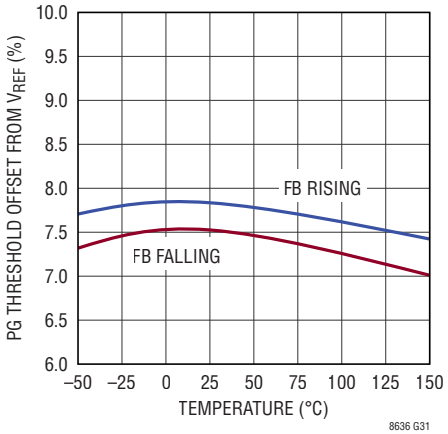

PG Low Thresholds

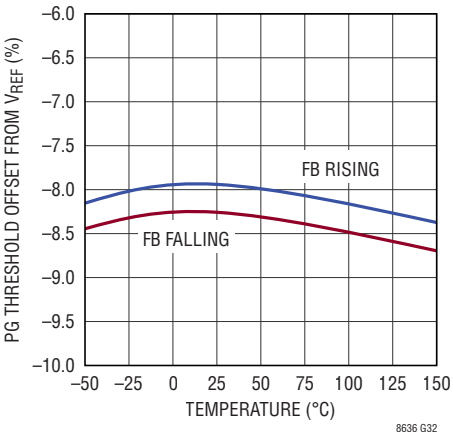

RT Programmed Switching Frequency

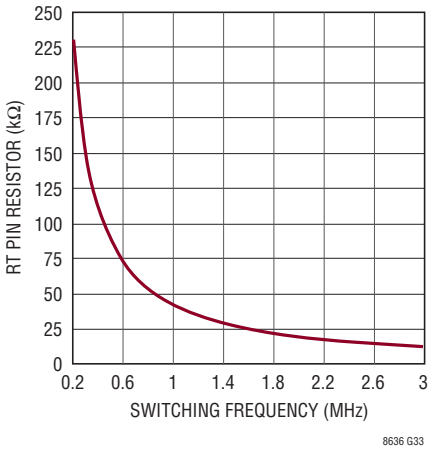

Minimum Input Voltage

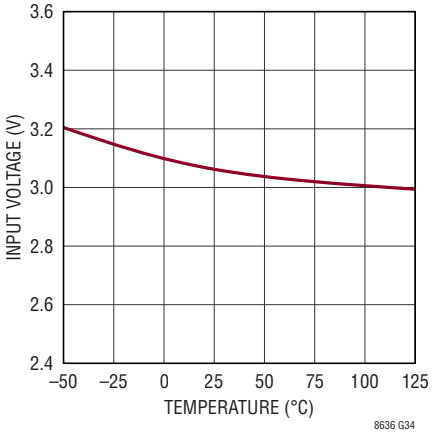

Bias Pin Current

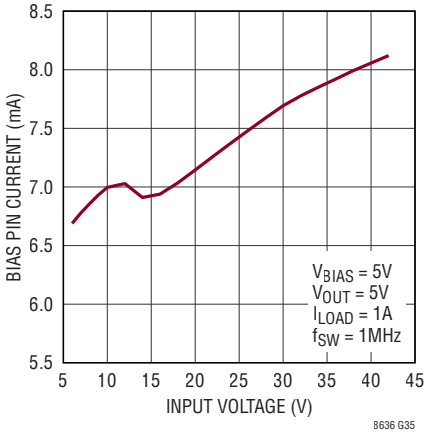

Bias Pin Current

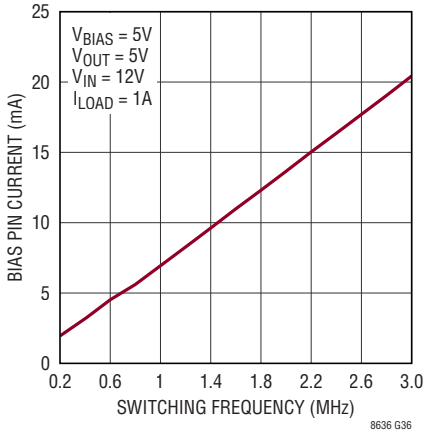

TYPICAL PERFORMANCE CHARACTERISTICS

Case Temperature Rise

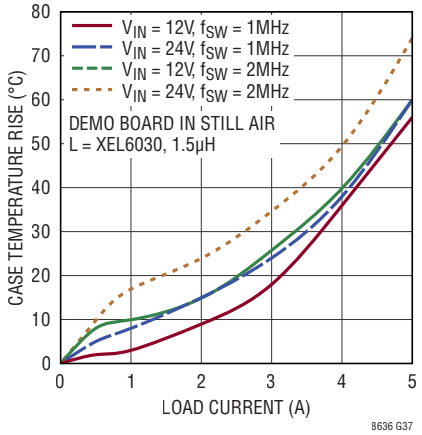

Case Temperature Rise vs 7A Pulsed Load

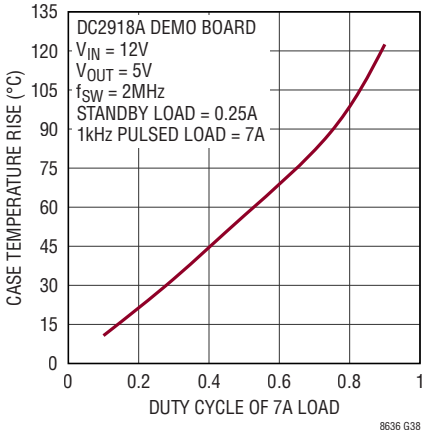

Switching Rising Edge

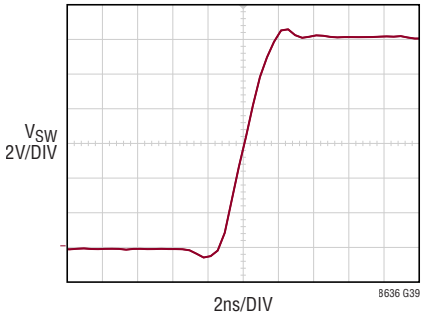

V_{IN} = 12V
I_{LOAD} = 2A

Switching Waveforms, Full Frequency Continuous Operation

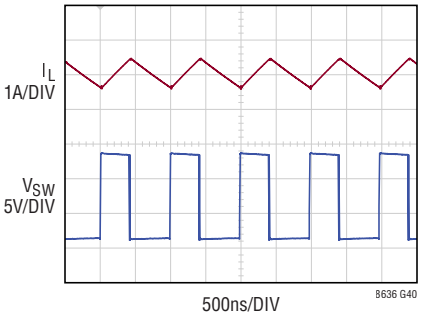

FRONT PAGE APPLICATION
$12V_{IN}$ TO $5V_{OUT}$ AT 1A

Switching Waveforms, Burst Mode Operation

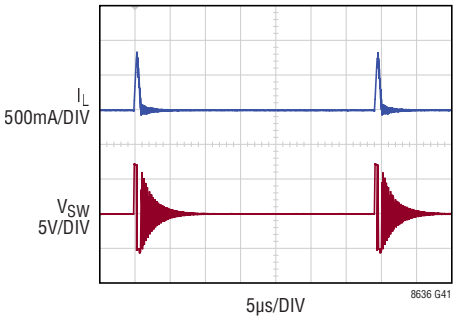

FRONT PAGE APPLICATION
$12V_{IN}$ TO $5V_{OUT}$ AT 10mA
V_{SYNC} = 0V

Switching Waveforms

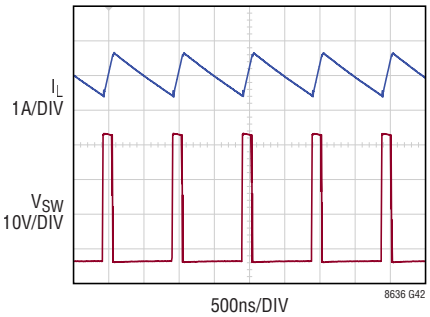

FRONT PAGE APPLICATION
$36V_{IN}$ TO $5V_{OUT}$ AT 1A

LT8636 Transient Response; Internal Compensation

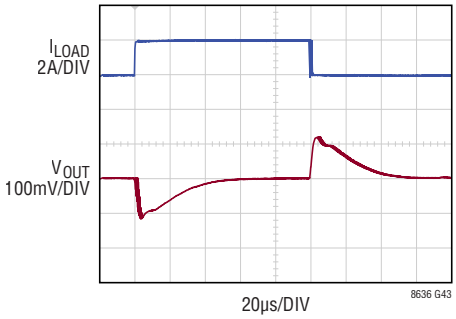

FRONT PAGE APPLICATION
2A TO 4A TRANSIENT
$12V_{IN}$, $5V_{OUT}$
f_{SW} = 2MHz
C_{OUT} = 100µF, C_{LEAD} = 10pF

LT8637 Transient Response; External Compensation

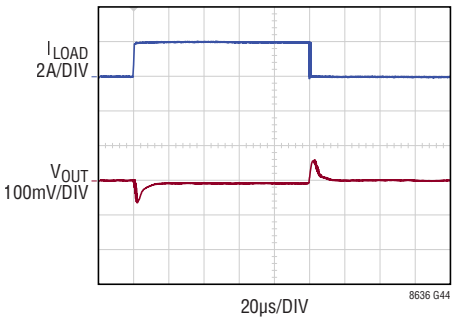

2A TO 4A TRANSIENT
$12V_{IN}$, $5V_{OUT}$
f_{SW} = 2MHz
C_C = 330pF, R_C = 8.45k
C_{OUT} = 100µF, C_{LEAD} = 4.7pF

TYPICAL PERFORMANCE CHARACTERISTICS

LT8636 Transient Response; 100mA to 1.1A Transient

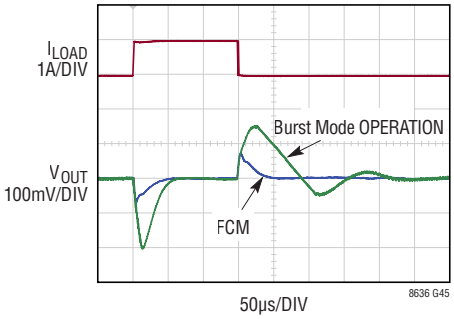

FRONT PAGE APPLICATION
100mA TO 1.1A TRANSIENT
$12V_{IN}$, $5V_{OUT}$, f_{SW} = 1MHz
C_{OUT} = 100µF

LT8637 Transient Response; 100mA to 1.1A Transient

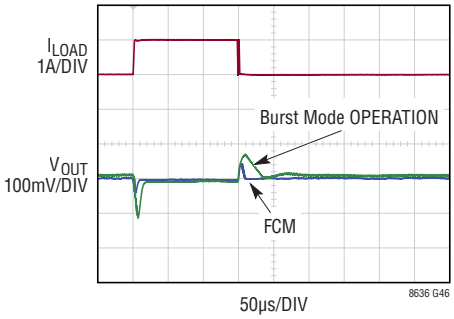

C_C = 330pF, R_C = 6.49k, C_{LEAD} = 4.7pF
100mA TO 1.1A TRANSIENT
$12V_{IN}$, $5V_{OUT}$, f_{SW} = 1MHz
C_{OUT} = 100µF

Start-Up Dropout Performance

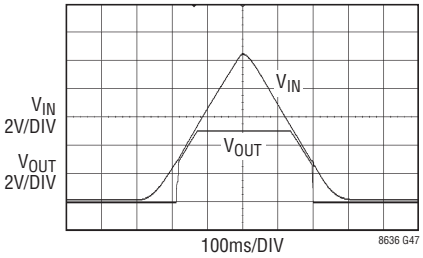

2.5Ω LOAD
(2A IN REGULATION)

Start-Up Dropout Performance

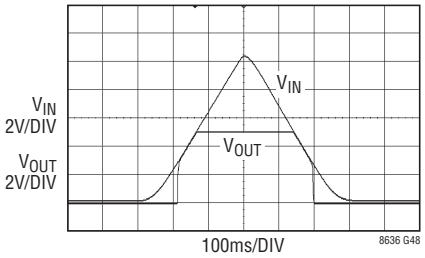

20Ω LOAD
(250mA IN REGULATION)

TYPICAL PERFORMANCE CHARACTERISTICS

Conducted EMI Performance

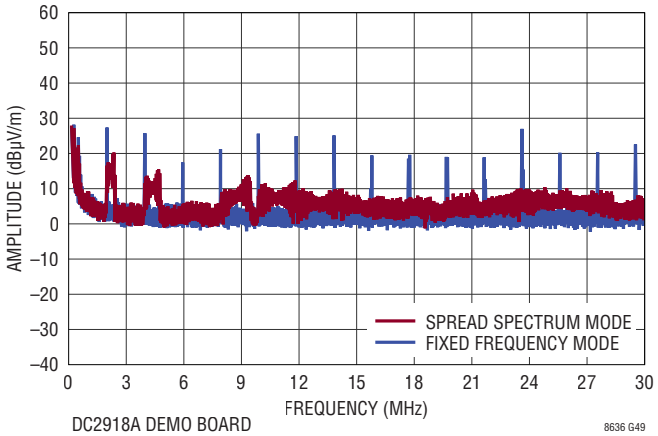

DC2918A DEMO BOARD
(WITH EMI FILTER INSTALLED)
14V INPUT TO 5V OUTPUT AT 5A, f_{SW} = 2MHz

Radiated EMI Performance
(CISPR25 Radiated Emission Test with Class 5 Peak Limits)

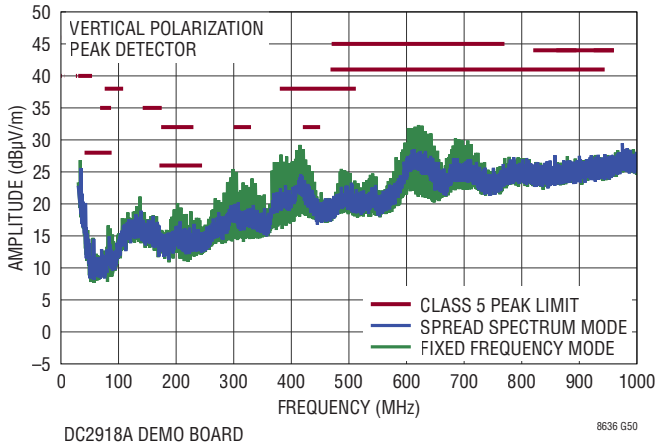

DC2918A DEMO BOARD
(WITH EMI FILTER INSTALLED)
14V INPUT TO 5V OUTPUT AT 5A, f_{SW} = 2MHz

PIN FUNCTIONS

PG (Pin 1): The PG pin is the open-drain output of an internal comparator. PG remains low until the FB pin is within ±8% of the final regulation voltage, and there are no fault conditions. PG is also pulled low when EN/UV is below 1V, $INTV_{CC}$ has fallen too low, V_{IN} is too low, or thermal shutdown. PG is valid when V_{IN} is above 3.4V.

BIAS (Pin 2): The internal regulator will draw current from BIAS instead of V_{IN} when BIAS is tied to a voltage higher than 3.1V. For output voltages of 3.3V to 25V this pin should be tied to V_{OUT}. If this pin is tied to a supply other than V_{OUT} use a 1µF local bypass capacitor on this pin. If no supply is available, tie to GND. However, especially for high input or high frequency applications, BIAS should be tied to output or an external supply of 3.3V or above.

$INTV_{CC}$ (Pin 3): Internal 3.4V Regulator Bypass Pin. The internal power drivers and control circuits are powered from this voltage. $INTV_{CC}$ maximum output current is 20mA. Do not load the $INTV_{CC}$ pin with external circuitry. $INTV_{CC}$ current will be supplied from BIAS if BIAS > 3.1V, otherwise current will be drawn from V_{IN}. Voltage on $INTV_{CC}$ will vary between 2.8V and 3.4V when BIAS is between 3.0V and 3.6V. Place a low ESR ceramic capacitor of at least 1µF from this pin to ground close to the IC.

GND (Pins 4, 13, Exposed Pad Pin 21): Ground. Place the negative terminal of the input capacitor as close to the GND pins as possible. The exposed pads should be soldered to the PCB for good thermal performance. If necessary due to manufacturing limitations Pin 21 may be left disconnected, however thermal performance will be degraded.

NC (Pins 5, 12): No Connect. This pin is not connected to internal circuitry and can be tied anywhere on the PCB, typically ground.

V_{IN} (Pins 6, 11): The V_{IN} pins supply current to the LT8636/LT8637 internal circuitry and to the internal topside power switch. The LT8636/LT8637 requires the use of multiple V_{IN} bypass capacitors. Two small 1µF capacitors should be placed as close as possible to the LT8636/LT8637, one capacitor on each side of the device (C_{IN1}, C_{IN2}). A third capacitor with a larger value, 2.2µF or higher, should be placed near C_{IN1} or C_{IN2}. See Applications Information section for sample layout.

BST (Pin 7): This pin is used to provide a drive voltage, higher than the input voltage, to the topside power switch. Place a 0.1µF boost capacitor as close as possible to the IC.

SW (Pins 8–10): The SW pins are the outputs of the internal power switches. Tie these pins together and connect them to the inductor. This node should be kept small on the PCB for good performance and low EMI.

EN/UV (Pin 14): The LT8636/LT8637 is shut down when this pin is low and active when this pin is high. The hysteretic threshold voltage is 1.00V going up and 0.96V going down. Tie to V_{IN} if the shutdown feature is not used. An external resistor divider from V_{IN} can be used to program a V_{IN} threshold below which the LT8636/LT8637 will shut down.

SYNC/MODE (Pin 15): For the LT8636/LT8637, this pin programs four different operating modes: 1) Burst Mode operation. Tie this pin to ground for Burst Mode operation at low output loads—this will result in ultralow quiescent current. 2) Forced Continuous mode (FCM). This mode offers fast transient response and full frequency operation over a wide load range. Float this pin for FCM. When floating, pin leakage currents should be <1µA. See Block Diagram for internal pull-up and pull-down resistance. 3) Spread spectrum mode. Tie this pin high to $INTV_{CC}$ (~3.4V) or an external supply of 3V to 4V for forced continuous mode with spread-spectrum modulation. 4) Synchronization mode. Drive this pin with a clock source to synchronize to an external frequency. During synchronization the part will operate in forced continuous mode.

CLKOUT (Pin 16): In forced continuous mode, spread spectrum, and synchronization modes, the CLKOUT pin will provide a ~200ns wide pulse at the switch frequency. The low and high levels of the CLKOUT pin are ground and $INTV_{CC}$ respectively, and the drive strength of the CLKOUT pin is several hundred ohms. In Burst Mode operation, the CLKOUT pin will be low. Float this pin if the CLKOUT function is not used.

RT (Pin 17): A resistor is tied between RT and ground to set the switching frequency.

PIN FUNCTIONS

TR/SS (Pin 18): Output Tracking and Soft-Start Pin. This pin allows user control of output voltage ramp rate during start-up. For the LT8636/LT8637, a TR/SS voltage below 0.97V forces it to regulate the FB pin to equal the TR/SS pin voltage. When TR/SS is above 0.97V, the tracking function is disabled and the internal reference resumes control of the error amplifier. For the LT8637, a TR/SS voltage below 1.6V forces it to regulate the FB pin to a function of the TR/SS pin voltage. See plot in the Typical Performance Characteristics section. When TR/SS is above 1.6V, the tracking function is disabled and the internal reference resumes control of the error amplifier. An internal 1.9µA pull-up current from $INTV_{CC}$ on this pin allows a capacitor to program output voltage slew rate. This pin is pulled to ground with an internal 200Ω MOSFET during shutdown and fault conditions; use a series resistor if driving from a low impedance output. This pin may be left floating if the tracking function is not needed.

FB (Pin 19, LT8636 Only): The LT8636/LT8637 regulates the FB pin to 0.970V. Connect the feedback resistor divider tap to this pin. Also, connect a phase lead capacitor between FB and V_{OUT}. Typically, this capacitor is 4.7pF to 22pF.

V_C (Pin 19, LT8637 Only): The V_C pin is the output of the internal error amplifier. The voltage on this pin controls the peak switch current. Tie an RC network from this pin to ground to compensate the control loop.

FB (Pin 20): The LT8636/LT8637 regulates the FB pin to 0.970V. Connect the feedback resistor divider tap to this pin. Also, connect a phase lead capacitor between FB and V_{OUT}. Typically, this capacitor is 4.7pF to 22pF.

Corner Pins: These pins are for mechanical support only and can be tied anywhere on the PCB, typically ground.

BLOCK DIAGRAM

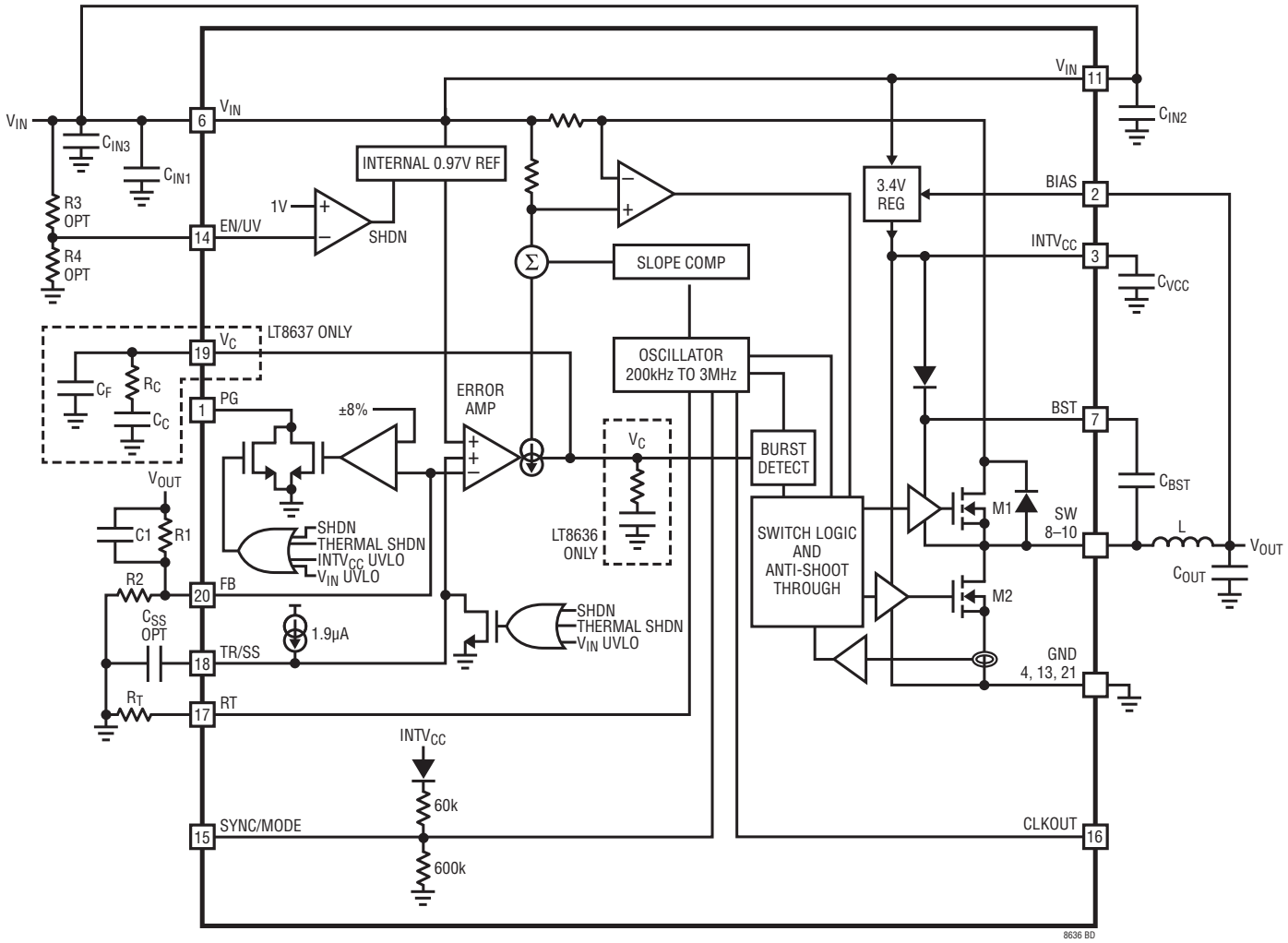

OPERATION

The LT8636/LT8637 is a monolithic, constant frequency, current mode step-down DC/DC converter. An oscillator, with frequency set using a resistor on the RT pin, turns on the internal top power switch at the beginning of each clock cycle. Current in the inductor then increases until the top switch current comparator trips and turns off the top power switch. The peak inductor current at which the top switch turns off is controlled by the voltage on the internal VC node. The error amplifier servos the VC node by comparing the voltage on the V_{FB} pin with an internal 0.97V reference. When the load current increases it causes a reduction in the feedback voltage relative to the reference leading the error amplifier to raise the VC voltage until the average inductor current matches the new load current. When the top power switch turns off, the synchronous power switch turns on until the next clock cycle begins or inductor current falls to zero. If overload conditions result in more than 10A flowing through the bottom switch, the next clock cycle will be delayed until switch current returns to a safe level.

If the EN/UV pin is low, the LT8636/LT8637 is shut down and draws 1µA from the input. When the EN/UV pin is above 1V, the switching regulator will become active.

To optimize efficiency at light loads, the LT8636/LT8637 operates in Burst Mode operation in light load situations. Between bursts, all circuitry associated with controlling the output switch is shut down, reducing the input supply current to 1.7µA (LT8636) or 230µA (LT8637 with BIAS = 0). In a typical application, 2.5µA (LT8636) or 120µA (LT8637 with BIAS = $5V_{OUT}$) will be consumed from the input supply when regulating with no load. The SYNC/MODE pin is tied low to use Burst Mode operation and can be floated to use forced continuous mode (FCM). If a clock is applied to the SYNC/MODE pin, the part will synchronize to an external clock frequency and operate in FCM.

The LT8636/LT8637 can operate in forced continuous mode (FCM) for fast transient response and full frequency operation over a wide load range. When in FCM the oscillator operates continuously and positive SW transitions are aligned to the clock. Negative inductor current is allowed. The LT8636/LT8637 can sink current from the output and return this charge to the input in this mode, improving load step transient response.

To improve EMI, the LT8636/LT8637 can operate in spread spectrum mode. This feature varies the clock with a triangular frequency modulation of +20%. For example, if the LT8636/LT8637's frequency is programmed to switch at 2MHz, spread spectrum mode will modulate the oscillator between 2MHz and 2.4MHz. The SYNC/MODE pin should be tied high to $INTV_{CC}$ (~3.4V) or an external supply of 3V to 4V to enable spread spectrum modulation with forced continuous mode.

To improve efficiency across all loads, supply current to internal circuitry can be sourced from the BIAS pin when biased at 3.3V or above. Else, the internal circuitry will draw current from V_{IN}. The BIAS pin should be connected to V_{OUT} if the LT8636/LT8637 output is programmed at 3.3V to 25V.

The V_C pin optimizes the loop compensation of the switching regulator based on the programmed switching frequency, allowing for a fast transient response. The V_C pin also enables current sharing and a CLKOUT pin enables synchronizing other regulators to the LT8637.

Comparators monitoring the FB pin voltage will pull the PG pin low if the output voltage varies more than ±8% (typical) from the set point, or if a fault condition is present.

The oscillator reduces the LT8636/LT8637's operating frequency when the voltage at the FB pin is low. This frequency foldback helps to control the inductor current when the output voltage is lower than the programmed value which occurs during start-up or overcurrent conditions. When a clock is applied to the SYNC/MODE pin, the SYNC/MODE pin is floated, or held DC high, the frequency foldback is disabled and the switching frequency will slow down only during overcurrent conditions.

APPLICATIONS INFORMATION

Low EMI PCB Layout

The LT8636/LT8637 is specifically designed to minimize EMI emissions and also to maximize efficiency when switching at high frequencies. For optimal performance the LT8636/LT8637 requires the use of multiple V_{IN} bypass capacitors.

Two small 1µF capacitors should be placed as close as possible to the LT8636/LT8637, one capacitor on each side of the device (C_{IN1}, C_{IN2}). A third capacitor with a larger value, 2.2µF or higher, should be placed near C_{IN1} or C_{IN2}.

See Figure 1 for recommended PCB layouts.

For more detail and PCB design files refer to the Demo Board guide for the LT8636/LT8637.

Note that large, switched currents flow in the LT8636/LT8637 V_{IN} and GND pins and the input capacitors. The loops formed by the input capacitors should be as small as possible by placing the capacitors adjacent to the V_{IN} and GND pins. Capacitors with small case size such as 0603 are optimal due to lowest parasitic inductance.

The input capacitors, along with the inductor and output capacitors, should be placed on the same side of the circuit board, and their connections should be made on that layer. Place a local, unbroken ground plane under the application circuit on the layer closest to the surface layer. The SW and BOOST nodes should be as small as possible. Finally, keep the FB and RT nodes small so that the ground traces will shield them from the SW and BOOST nodes.

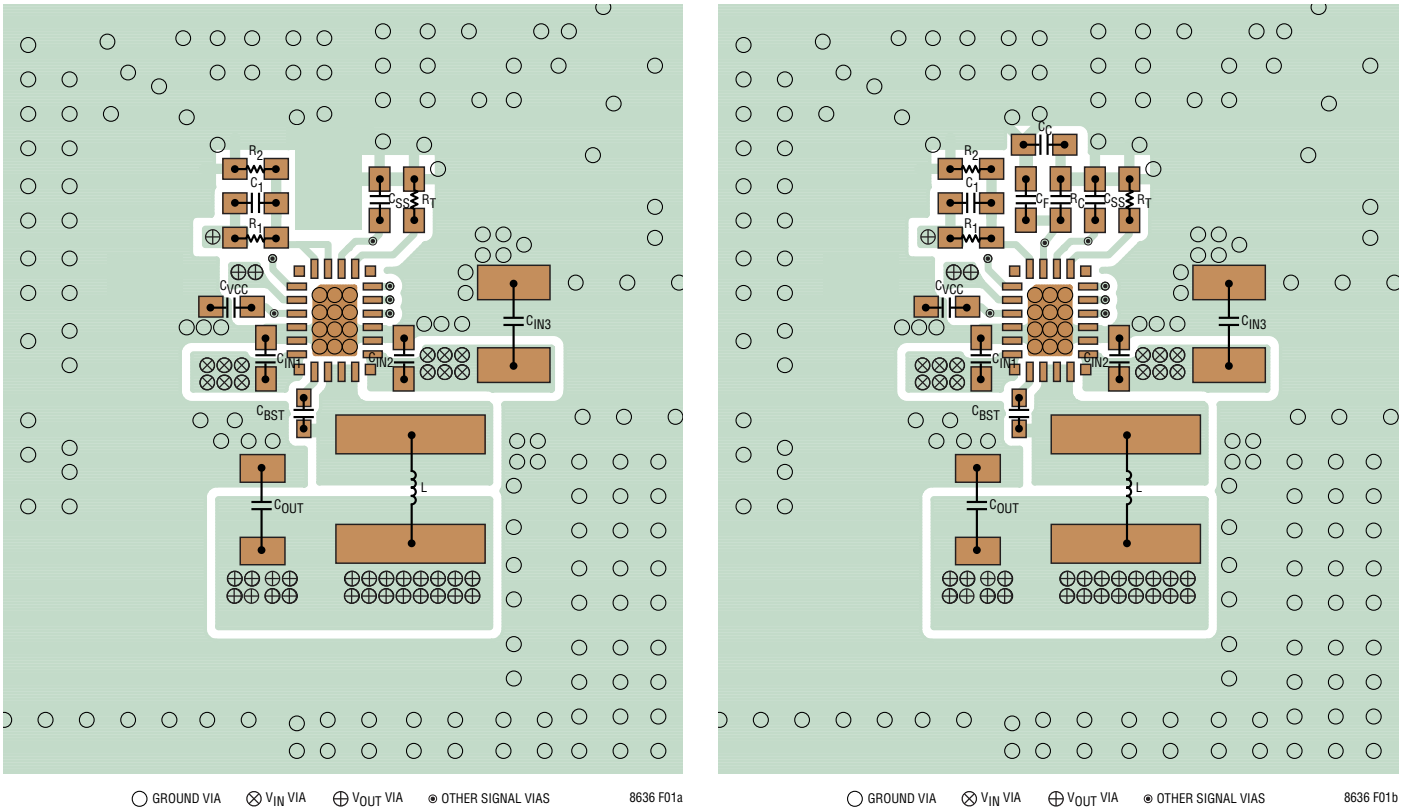

(a) LT8636

(b) LT8637

Figure 1. Recommended PCB Layouts for the LT8636

APPLICATIONS INFORMATION

The exposed pads on the bottom of the package should be soldered to the PCB to reduce thermal resistance to ambient. To keep thermal resistance low, extend the ground plane from GND as much as possible, and add thermal vias to additional ground planes within the circuit board and on the bottom side.

Burst Mode Operation

To enhance efficiency at light loads, the LT8636/LT8637 operates in low ripple Burst Mode operation, which keeps the output capacitor charged to the desired output voltage while minimizing the input quiescent current and minimizing output voltage ripple. In Burst Mode operation the LT8636/LT8637 delivers single small pulses of current to the output capacitor followed by sleep periods where the output power is supplied by the output capacitor. While in sleep mode the LT8636 consumes 1.7µA, and the LT8637 consumes 230µA.

As the output load decreases, the frequency of single current pulses decreases (see Figure 2) and the percentage of time the LT8636/LT8637 is in sleep mode increases, resulting in much higher light load efficiency than for typical converters. By maximizing the time between pulses, the LT8636/LT8637's quiescent current approaches 2.5µA for a typical application when there is no output load. Therefore, to optimize the quiescent current performance at light loads, the current in the feedback resistor divider must be minimized as it appears to the output as load current.

In order to achieve higher light load efficiency, more energy must be delivered to the output during the single small pulses in Burst Mode operation such that the LT8636/LT8637 can stay in sleep mode longer between each pulse. This can be achieved by using a larger value inductor (i.e., 4.7µH), and should be considered independent of switching frequency when choosing an inductor. For example, while a lower inductor value would typically be used for a high switching frequency application, if high light load efficiency is desired, a higher inductor value should be chosen. See curve in Typical Performance Characteristics.

While in Burst Mode operation the current limit of the top switch is approximately 900mA (as shown in Figure 3), resulting in low output voltage ripple. Increasing the output capacitance will decrease output ripple proportionally. As load ramps upward from zero the switching frequency will increase but only up to the switching frequency programmed by the resistor at the RT pin as shown in Figure 2.

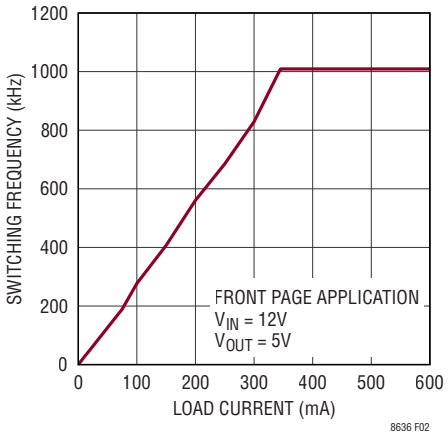

Figure 2. SW Frequency vs Load Information in Burst Mode Operation

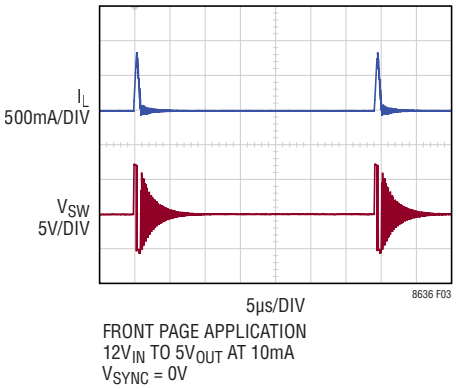

Figure 3. Burst Mode Operation

APPLICATIONS INFORMATION

The output load at which the LT8636/LT8637 reaches the programmed frequency varies based on input voltage, output voltage and inductor choice. To select low ripple Burst Mode operation, tie the SYNC/MODE pin below 0.4V (this can be ground or a logic low output).

Forced Continuous Mode

The LT8636/LT8637 can operate in forced continuous mode (FCM) for fast transient response and full frequency operation over a wide load range. When in FCM, the oscillator operates continuously and positive SW transitions are aligned to the clock. Negative inductor current is allowed at light loads or under large transient conditions. The LT8636/LT8637 can sink current from the output and return this charge to the input in this mode, improving load step transient response (see Figure 4). At light loads, FCM operation is less efficient than Burst Mode operation, but may be desirable in applications where it is necessary to keep switching harmonics out of the signal band. FCM must be used if the output is required to sink current. To enable FCM, float the SYNC/MODE pin. Leakage current on this pin should be <1μA. See Block Diagram for internal pull-up and pull-down resistance.

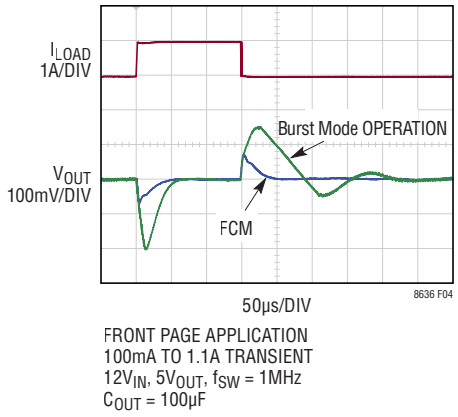

Figure 4. LT8636 Load Step Transient Response with and without Forced Continuous Mode

FCM is disabled if the V_{IN} pin is held above 37V or if the FB pin is held greater than 8% above the feedback reference voltage. FCM is also disabled during soft-start until the soft-start capacitor is fully charged. When FCM is disabled in these ways, negative inductor current is not allowed and the LT8636/LT8637 operates in pulse-skipping mode.

For robust operation over a wide V_{IN} and V_{OUT} range, use an inductor value greater than L_{MIN}:

$$L_{MIN} = \frac{V_{OUT}}{2 \bullet f_{SW}} \bullet \left(1 - \frac{V_{OUT}}{V_{IN,MAX}}\right)$$

Spread Spectrum Mode

The LT8636/LT8637 features spread spectrum operation to further reduce EMI emissions. To enable spread spectrum operation, the SYNC/MODE pin should be tied high to $INTV_{CC}$ (~3.4V)or an external supply of 3V to 4V. In this mode, triangular frequency modulation is used to vary the switching frequency between the value programmed by RT to approximately 20% higher than that value. The modulation frequency is approximately 3kHz. For example, when the LT8636/LT8637 is programmed to 2MHz, the frequency will vary from 2MHz to 2.4MHz at a 3kHz rate. When spread spectrum operation is selected, Burst Mode operation is disabled, and the part will run in forced continuous mode.

Synchronization

To synchronize the LT8636/LT8637 oscillator to an external frequency, connect a square wave to the SYNC/MODE pin. The square wave amplitude should have valleys that are below 0.4V and peaks above 1.5V (up to 6V) with a minimum on-time and off-time of 50ns.

APPLICATIONS INFORMATION

The LT8636/LT8637 will not enter Burst Mode operation at low output loads while synchronized to an external clock, but instead will run forced continuous mode to maintain regulation. The LT8636/LT8637 may be synchronized over a 200kHz to 3MHz range. The RT resistor should be chosen to set the LT8636/LT8637 switching frequency equal to or below the lowest synchronization input. For example, if the synchronization signal will be 500kHz and higher, the RT should be selected for 500kHz. The slope compensation is set by the RT value, while the minimum slope compensation required to avoid subharmonic oscillations is established by the inductor size, input voltage and output voltage. Since the synchronization frequency will not change the slopes of the inductor current waveform, if the inductor is large enough to avoid subharmonic oscillations at the frequency set by RT, then the slope compensation will be sufficient for all synchronization frequencies.

FB Resistor Network

The output voltage is programmed with a resistor divider between the output and the FB pin. Choose the resistor values according to:

$$R1 = R2\left(\frac{V_{OUT}}{0.970V} - 1\right) \quad (1)$$

Reference designators refer to the Block Diagram. 1% resistors are recommended to maintain output voltage accuracy.

For the LT8636/LT8637, if low input quiescent current and good light-load efficiency are desired, use large resistor values for the FB resistor divider. The current flowing in the divider acts as a load current, and will increase the no-load input current to the converter, which is approximately:

$$I_Q = 1.7\mu A + \left(\frac{V_{OUT}}{R1+R2}\right)\left(\frac{V_{OUT}}{V_{IN}}\right)\left(\frac{1}{n}\right) \quad (2)$$

where 1.7µA is the quiescent current of the LT8636/LT8637 and the second term is the current in the feedback divider reflected to the input of the buck operating at its light load efficiency n. For a 3.3V application with R1 = 1M and R2 = 412k, the feedback divider draws 2.3µA. With V_{IN} = 12V and n = 80%, this adds 0.8µA to the 1.7µA quiescent current resulting in 2.5µA no-load current from the 12V supply. Note that this equation implies that the no-load current is a function of V_{IN}; this is plotted in the Typical Performance Characteristics section.

When using large FB resistors, a 4.7pF to 22pF phase-lead capacitor should be connected from V_{OUT} to FB.

High V_{OUT} Considerations

In applications where the output voltage is higher than 10V, refer to the Reverse Current Considerations section in Application Note AN-2582.

Setting the Switching Frequency

The LT8636/LT8637 uses a constant frequency PWM architecture that can be programmed to switch from 200kHz to 3MHz by using a resistor tied from the RT pin to ground. A table showing the necessary R_T value for a desired switching frequency is in Table 1.

The R_T resistor required for a desired switching frequency can be calculated using:

$$R_T = \frac{46.5}{f_{SW}} - 5.2 \quad (3)$$

where R_T is in kΩ and f_{SW} is the desired switching frequency in MHz.

Table 1. SW Frequency vs R_T Value

f_{SW} (MHz)	R_T (kΩ)
0.2	232
0.3	150
0.4	110
0.5	88.7
0.6	71.5
0.7	60.4
0.8	52.3
1.0	41.2
1.2	33.2
1.4	28.0
1.6	23.7
1.8	20.5
2.0	17.8
2.2	15.8
3.0	10.7

APPLICATIONS INFORMATION

Operating Frequency Selection and Trade-Offs

Selection of the operating frequency is a trade-off between efficiency, component size, and input voltage range. The advantage of high frequency operation is that smaller inductor and capacitor values may be used. The disadvantages are lower efficiency and a smaller input voltage range.

The highest switching frequency ($f_{SW(MAX)}$) for a given application can be calculated as follows:

$$f_{SW(MAX)} = \frac{V_{OUT} + V_{SW(BOT)}}{t_{ON(MIN)}\left(V_{IN} - V_{SW(TOP)} + V_{SW(BOT)}\right)} \quad (4)$$

where V_{IN} is the typical input voltage, V_{OUT} is the output voltage, $V_{SW(TOP)}$ and $V_{SW(BOT)}$ are the internal switch drops (~0.4V, ~0.15V, respectively at maximum load) and $t_{ON(MIN)}$ is the minimum top switch on-time (see the Electrical Characteristics). This equation shows that a slower switching frequency is necessary to accommodate a high V_{IN}/V_{OUT} ratio.

For transient operation, V_{IN} may go as high as the absolute maximum rating of 42V regardless of the R_T value, however the LT8636/LT8637 will reduce switching frequency as necessary to maintain control of inductor current to assure safe operation.

The LT8636/LT8637 is capable of a maximum duty cycle of approximately 99%, and the V_{IN}-to-V_{OUT} dropout is limited by the $R_{DS(ON)}$ of the top switch. In this mode the LT8636/LT8637 skips switch cycles, resulting in a lower switching frequency than programmed by RT.

For applications that cannot allow deviation from the programmed switching frequency at low V_{IN}/V_{OUT} ratios use the following formula to set switching frequency:

$$V_{IN(MIN)} = \frac{V_{OUT} + V_{SW(BOT)}}{1 - f_{SW} \bullet t_{OFF(MIN)}} - V_{SW(BOT)} + V_{SW(TOP)} \quad (5)$$

where $V_{IN(MIN)}$ is the minimum input voltage without skipped cycles, V_{OUT} is the output voltage, $V_{SW(TOP)}$ and $V_{SW(BOT)}$ are the internal switch drops (~0.4V, ~0.15V, respectively at maximum load), f_{SW} is the switching frequency (set by R_T), and $t_{OFF(MIN)}$ is the minimum switch off-time. Note that higher switching frequency will increase the minimum input voltage below which cycles will be dropped to achieve higher duty cycle.

Inductor Selection and Maximum Output Current

The LT8636/LT8637 is designed to minimize solution size by allowing the inductor to be chosen based on the output load requirements of the application. During overload or short-circuit conditions the LT8636/LT8637 safely tolerates operation with a saturated inductor through the use of a high speed peak-current mode architecture.

A good first choice for the inductor value is:

$$L = \left(\frac{V_{OUT} + V_{SW(BOT)}}{f_{SW}}\right) \bullet 0.7 \quad (6)$$

where f_{SW} is the switching frequency in MHz, V_{OUT} is the output voltage, $V_{SW(BOT)}$ is the bottom switch drop (~0.15V) and L is the inductor value in µH.

To avoid overheating and poor efficiency, an inductor must be chosen with an RMS current rating that is greater than the maximum expected output load of the application. In addition, the saturation current (typically labeled I_{SAT}) rating of the inductor must be higher than the load current plus 1/2 of in inductor ripple current:

$$I_{L(PEAK)} = I_{LOAD(MAX)} + \frac{1}{2}\Delta I_L \quad (7)$$

where ΔI_L is the inductor ripple current as calculated in Equation 9 and $I_{LOAD(MAX)}$ is the maximum output load for a given application.

As a quick example, an application requiring 3A output should use an inductor with an RMS rating of greater than 3A and an I_{SAT} of greater than 4A. During long duration overload or short-circuit conditions, the inductor RMS rating requirement is greater to avoid overheating of the inductor. To keep the efficiency high, the series resistance (DCR) should be less than 0.02Ω, and the core material should be intended for high frequency applications.

The LT8636/LT8637 limits the peak switch current in order to protect the switches and the system from overload faults. The top switch current limit (I_{LIM}) is 10A at low duty cycles and decreases linearly to 7A at DC = 0.8. The inductor value must then be sufficient to supply the desired maximum output current ($I_{OUT(MAX)}$), which is a function of the switch current limit (I_{LIM}) and the ripple current.

APPLICATIONS INFORMATION

$$I_{OUT(MAX)} = I_{LIM} - \frac{\Delta I_L}{2} \quad (8)$$

The peak-to-peak ripple current in the inductor can be calculated as follows:

$$\Delta I_L = \frac{V_{OUT}}{L \bullet f_{SW}} \bullet \left(1 - \frac{V_{OUT}}{V_{IN(MAX)}}\right) \quad (9)$$

where f_{SW} is the switching frequency of the LT8636/LT8637, and L is the value of the inductor. Therefore, the maximum output current that the LT8636/LT8637 will deliver depends on the switch current limit, the inductor value, and the input and output voltages. The inductor value may have to be increased if the inductor ripple current does not allow sufficient maximum output current ($I_{OUT(MAX)}$) given the switching frequency, and maximum input voltage used in the desired application.

In order to achieve higher light load efficiency, more energy must be delivered to the output during the single small pulses in Burst Mode operation such that the LT8636/LT8637 can stay in sleep mode longer between each pulse. This can be achieved by using a larger value inductor (i.e., 4.7µH), and should be considered independent of switching frequency when choosing an inductor. For example, while a lower inductor value would typically be used for a high switching frequency application, if high light load efficiency is desired, a higher inductor value should be chosen. See curve in Typical Performance Characteristics.

The optimum inductor for a given application may differ from the one indicated by this design guide. A larger value inductor provides a higher maximum load current and reduces the output voltage ripple. For applications requiring smaller load currents, the value of the inductor may be lower and the LT8636/LT8637 may operate with higher ripple current. This allows use of a physically smaller inductor, or one with a lower DCR resulting in higher efficiency. Be aware that low inductance may result in discontinuous mode operation, which further reduces maximum load current.

For more information about maximum output current and discontinuous operation, see Analog Devices Application Note 44.

For duty cycles greater than 50% ($V_{OUT}/V_{IN} > 0.5$), a minimum inductance is required to avoid subharmonic oscillation (See Equation 10). See Application Note 19 for more details.

$$L_{MIN} = \frac{V_{IN}(2 \bullet DC - 1)}{3.5 \bullet f_{SW}} \quad (10)$$

where DC is the duty cycle ratio (V_{OUT}/V_{IN}) and f_{SW} is the switching frequency.

Input Capacitors

The V_{IN} of the LT8636/LT8637 should be bypassed with at least three ceramic capacitors for best performance. Two small ceramic capacitors of 1µF should be placed close to the part; one on each side of the device (C_{IN1}, C_{IN2}). These capacitors should be 0402 or 0603 in size. For automotive applications requiring 2 series input capacitors, two small 0402 or 0603 may be placed at each side of the LT8636/LT8637 near the V_{IN} and GND pins.

A third, larger ceramic capacitor of 2.2µF or larger should be placed close to C_{IN1} or C_{IN2}. See layout section for more detail. X7R or X5R capacitors are recommended for best performance across temperature and input voltage variations.

Note that larger input capacitance is required when a lower switching frequency is used. If the input power source has high impedance, or there is significant inductance due to long wires or cables, additional bulk capacitance may be necessary. This can be provided with a low performance electrolytic capacitor.

A ceramic input capacitor combined with trace or cable inductance forms a high quality (under damped) tank circuit. If the LT8636/LT8637 circuit is plugged into a live supply, the input voltage can ring to twice its nominal value, possibly exceeding the LT8636/LT8637's voltage rating. This situation is easily avoided (see Analog Devices Application Note 88).

APPLICATIONS INFORMATION

Output Capacitor and Output Ripple

The output capacitor has two essential functions. Along with the inductor, it filters the square wave generated by the LT8636/LT8637 to produce the DC output. In this role it determines the output ripple, thus low impedance at the switching frequency is important. The second function is to store energy in order to satisfy transient loads and stabilize the LT8636/LT8637's control loop. Ceramic capacitors have very low equivalent series resistance (ESR) and provide the best ripple performance. For good starting values, see the Typical Applications section.

Use X5R or X7R types. This choice will provide low output ripple and good transient response. Transient performance can be improved with a higher value output capacitor and the addition of a feedforward capacitor placed between V_{OUT} and FB. Increasing the output capacitance will also decrease the output voltage ripple. A lower value of output capacitor can be used to save space and cost but transient performance will suffer and may cause loop instability. See the Typical Applications in this data sheet for suggested capacitor values.

When choosing a capacitor, special attention should be given to the data sheet to calculate the effective capacitance under the relevant operating conditions of voltage bias and temperature. A physically larger capacitor or one with a higher voltage rating may be required.

Ceramic Capacitors

Ceramic capacitors are small, robust and have very low ESR. However, ceramic capacitors can cause problems when used with the LT8636/LT8637 due to their piezoelectric nature. When in Burst Mode operation, the LT8636/LT8637's switching frequency depends on the load current, and at very light loads the LT8636/LT8637 can excite the ceramic capacitor at audio frequencies, generating audible noise. Since the LT8636/LT8637 operates at a lower current limit during Burst Mode operation, the noise is typically very quiet to a casual ear. If this is unacceptable, use a high performance tantalum or electrolytic capacitor at the output. Low noise ceramic capacitors are also available.

A final precaution regarding ceramic capacitors concerns the maximum input voltage rating of the LT8636/LT8637. As previously mentioned, a ceramic input capacitor combined with trace or cable inductance forms a high quality (underdamped) tank circuit. If the LT8636/LT8637 circuit is plugged into a live supply, the input voltage can ring to twice its nominal value, possibly exceeding the LT8636/LT8637's rating. This situation is easily avoided (see Analog Devices Technology Application Note 88).

Enable Pin

The LT8636/LT8637 is in shutdown when the EN pin is low and active when the pin is high. The rising threshold of the EN comparator is 1.0V, with 40mV of hysteresis. The EN pin can be tied to V_{IN} if the shutdown feature is not used, or tied to a logic level if shutdown control is required.

Adding a resistor divider from V_{IN} to EN programs the LT8636/LT8637 to regulate the output only when V_{IN} is above a desired voltage (see the Block Diagram). Typically, this threshold, $V_{IN(EN)}$, is used in situations where the input supply is current limited, or has a relatively high source resistance. A switching regulator draws constant power from the source, so source current increases as source voltage drops. This looks like a negative resistance load to the source and can cause the source to current limit or latch low under low source voltage conditions. The $V_{IN(EN)}$ threshold prevents the regulator from operating at source voltages where the problems might occur. This threshold can be adjusted by setting the values R3 and R4 such that they satisfy the following equation:

$$V_{IN(EN)} = \left(\frac{R3}{R4} + 1\right) \bullet 1.0V \qquad (11)$$

where the LT8636/LT8637 will remain off until V_{IN} is above $V_{IN(EN)}$. Due to the comparator's hysteresis, switching will not stop until the input falls slightly below $V_{IN(EN)}$.

When operating in Burst Mode operation for light load currents, the current through the $V_{IN(EN)}$ resistor network can easily be greater than the supply current consumed by the LT8636/LT8637. Therefore, the $V_{IN(EN)}$ resistors should be large to minimize their effect on efficiency at low loads.

APPLICATIONS INFORMATION

$INTV_{CC}$ Regulator

An internal low dropout (LDO) regulator produces the 3.4V supply from V_{IN} that powers the drivers and the internal bias circuitry. The $INTV_{CC}$ can supply enough current for the LT8636/LT8637's circuitry and must be bypassed to ground with a minimum of 1µF ceramic capacitor. Good bypassing is necessary to supply the high transient currents required by the power MOSFET gate drivers. To improve efficiency the internal LDO can also draw current from the BIAS pin when the BIAS pin is at 3.1V or higher. Typically the BIAS pin can be tied to the output of the LT8636/LT8637, or can be tied to an external supply of 3.3V or above. If BIAS is connected to a supply other than V_{OUT}, be sure to bypass with a local ceramic capacitor. If the BIAS pin is below 3.0V, the internal LDO will consume current from V_{IN}. Applications with high input voltage and high switching frequency where the internal LDO pulls current from V_{IN} will increase die temperature because of the higher power dissipation across the LDO. Do not connect an external load to the $INTV_{CC}$ pin.

Frequency Compensation (LT8637 Only)

Loop compensation determines the stability and transient performance, and is provided by the components tied to the V_C pin. Generally, a capacitor (C_C) and a resistor (R_C) in series to ground are used. Designing the compensation network is a bit complicated and the best values depend on the application. A practical approach is to start with one of the circuits in this data sheet that is similar to your application and tune the compensation network to optimize the performance. LTspice® simulations can help in this process. Stability should then be checked across all operating conditions, including load current, input voltage and temperature. The LT1375 data sheet contains a more thorough discussion of loop compensation and describes how to test the stability using a transient load.

Figure 5 shows an equivalent circuit for the LT8637 control loop. The error amplifier is a transconductance amplifier with finite output impedance. The power section, consisting of the modulator, power switches, and inductor, is modeled as a transconductance amplifier generating an output current proportional to the voltage at the V_C pin. Note that the output capacitor integrates this current, and that the capacitor on the V_C pin (C_C) integrates the error amplifier output current, resulting in two poles in the loop. A zero is required and comes from a resistor R_C in series with C_C. This simple model works well as long as the value of the inductor is not too high and the loop crossover frequency is much lower than the switching frequency. A phase lead capacitor (C_{PL}) across the feedback divider can be used to improve the transient response and is required to cancel the parasitic pole caused by the feedback node to ground capacitance.

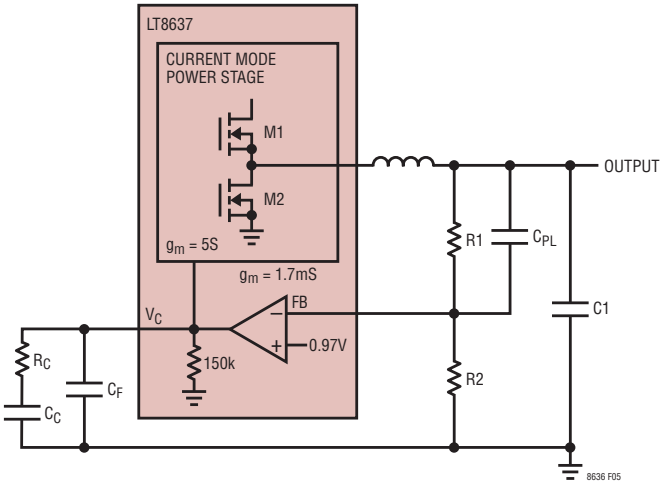

Figure 5. Model for Loop Response

APPLICATIONS INFORMATION

Output Voltage Tracking and Soft-Start

The LT8636/LT8637 allows the user to program its output voltage ramp rate by means of the TR/SS pin. An internal 1.9µA pulls up the TR/SS pin to $INTV_{CC}$. Putting an external capacitor on TR/SS enables soft starting the output to prevent current surge on the input supply. During the soft-start ramp the output voltage will proportionally track the TR/SS pin voltage.

For output tracking applications, TR/ SS can be externally driven by another voltage source. For the LT8636, from 0V to 0.97V, the TR/SS voltage will override the internal 0.97V reference input to the error amplifier, thus regulating the FB pin voltage to that of TR/SS pin. When TR/SS is above 0.97V, tracking is disabled and the feedback voltage will regulate to the internal reference voltage. For the LT8637, from 0V to 1.6V, the TR/SS voltage will override the internal 0.97V reference input to the error amplifier, thus regulating the FB pin voltage to a function of the TR/SS pin. See plot in the Typical Performance Characteristics section. When TR/SS is above 1.6V, tracking is disabled and the feedback voltage will regulate to the internal reference voltage. The TR/SS pin may be left floating if the function is not needed. The TR/SS pin may be left floating if the function is not needed.

An active pull-down circuit is connected to the TR/SS pin which will discharge the external soft-start capacitor in the case of fault conditions and restart the ramp when the faults are cleared. Fault conditions that clear the soft-start capacitor are the EN/UV pin transitioning low, V_{IN} voltage falling too low, or thermal shutdown.

Paralleling (LT8637 Only)

To increase the possible output current, two LT8637s can be connected in parallel to the same output. To do this, the V_C and FB pins are connected together, and each LT8637's SW node is connected to the common output through its own inductor. The CLKOUT pin of one LT8637 should be connected to the SYNC/MODE pin of the second LT8637 to have both devices operate in the same mode. During FCM, spread spectrum, and synchronization modes, both devices will operate at the same frequency. Figure 6 shows an application where two LT8637 are paralleled to get one output capable of up to 10A.

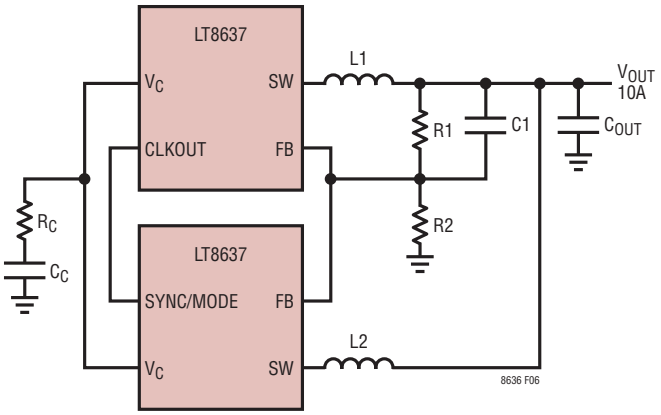

Figure 6. Paralleling Two LT8637s

TYPICAL APPLICATIONS

Output Power Good

When the LT8636/LT8637's output voltage is within the ±8% window of the regulation point, the output voltage is considered good and the open-drain PG pin goes high impedance and is typically pulled high with an external resistor. Otherwise, the internal pull-down device will pull the PG pin low. To prevent glitching both the upper and lower thresholds include 0.2% of hysteresis. PG is valid when V_{IN} is above 3.4V.

The PG pin is also actively pulled low during several fault conditions: EN/UV pin is below 1V, $INTV_{CC}$ has fallen too low, V_{IN} is too low, or thermal shutdown.

Shorted and Reversed Input Protection

The LT8636/LT8637 will tolerate a shorted output. Several features are used for protection during output short-circuit and brownout conditions. The first is the switching frequency will be folded back while the output is lower than the set point to maintain inductor current control. Second, the bottom switch current is monitored such that if inductor current is beyond safe levels switching of the top switch will be delayed until such time as the inductor current falls to safe levels.

Frequency foldback behavior depends on the state of the SYNC pin: If the SYNC pin is low the switching frequency will slow while the output voltage is lower than the programmed level. If the SYNC pin is connected to a clock source, floated or tied high, the LT8636/LT8637 will stay at the programmed frequency without foldback and only slow switching if the inductor current exceeds safe levels.

There is another situation to consider in systems where the output will be held high when the input to the LT8636/LT8637 is absent. This may occur in battery charging applications or in battery-backup systems where a battery or some other supply is diode ORed with the LT8636/LT8637's output. If the V_{IN} pin is allowed to float and the EN pin is held high (either by a logic signal or because it is tied to V_{IN}), then the LT8636/LT8637's internal circuitry will pull its quiescent current through its SW pin. This is acceptable if the system can tolerate several µA in this state. If the EN pin is grounded the SW pin current will drop to near 1µA. However, if the V_{IN} pin is grounded while the output is held high, regardless of EN, parasitic body diodes inside the LT8636/LT8637 can pull current from the output through the SW pin and the V_{IN} pin, which may damage the IC. Figure 7 shows a connection of the V_{IN} and EN/UV pins that will allow the LT8636/LT8637 to run only when the input voltage is present and that protects against a shorted or reversed input.

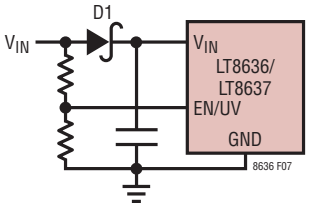

Figure 7. Reverse V_{IN} Protection

APPLICATIONS INFORMATION

Thermal Considerations and Peak Output Current

For higher ambient temperatures, care should be taken in the layout of the PCB to ensure good heat sinking of the LT8636/LT8637. The ground pins on the bottom of the package should be soldered to a ground plane. This ground should be tied to large copper layers below with thermal vias; these layers will spread heat dissipated by the LT8636/LT8637. Placing additional vias can reduce thermal resistance further. The maximum load current should be derated as the ambient temperature approaches the maximum junction rating. Power dissipation within the LT8636/LT8637 can be estimated by calculating the total power loss from an efficiency measurement and subtracting the inductor loss. The die temperature is calculated by multiplying the LT8636/LT8637 power dissipation by the thermal resistance from junction to ambient.

The internal overtemperature protection monitors the junction temperature of the LT8636/LT8637. If the junction temperature reaches approximately 180°C, the LT8636/LT8637 will stop switching and indicate a fault condition until the temperature drops about 10°C cooler.

Temperature rise of the LT8636/LT8637 is worst when operating at high load, high V_{IN}, and high switching frequency. If the case temperature is too high for a given application, then either V_{IN}, switching frequency, or load current can be decreased to reduce the temperature to an acceptable level. Figure 8 shows examples of how case temperature rise can be managed by reducing V_{IN}, switching frequency, or load.

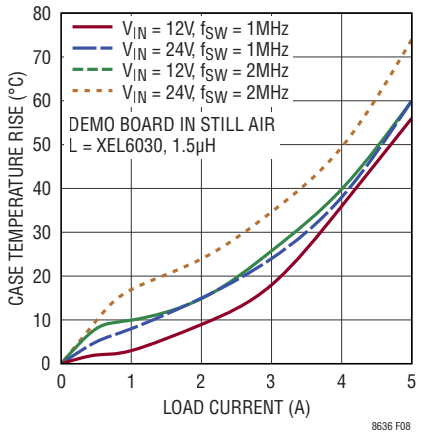

Figure 8. Case Temperature Rise

The LT8636/LT8637's internal power switches are capable of safely delivering up to 7A of peak output current. However, due to thermal limits, the package can only handle 7A loads for short periods of time. This time is determined by how quickly the case temperature approaches the maximum junction rating. Figure 9 shows an example of how case temperature rise changes with the duty cycle of a 1kHz pulsed 7A load.

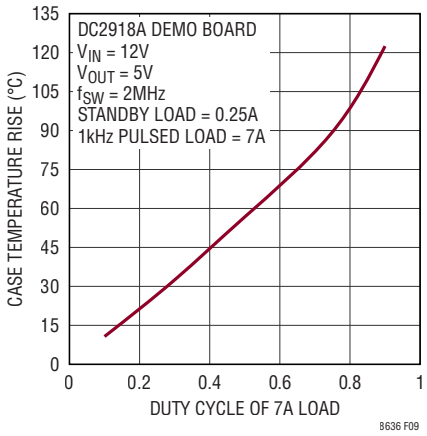

Figure 9. Case Temperature Rise vs 7A Pulsed Load

The LT8636/LT8637's top switch current limit decreases with higher duty cycle operation for slope compensation. This also limits the peak output current the LT8636/LT8637 can deliver for a given application. See curve in Typical Performance Characteristics.

TYPICAL APPLICATIONS

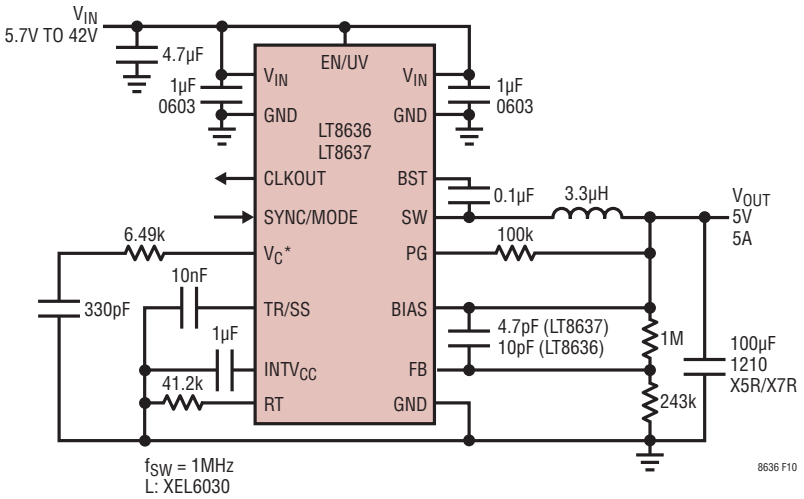

Figure 10. 5V, 5A Step-Down Converter with Soft-Start and Power Good

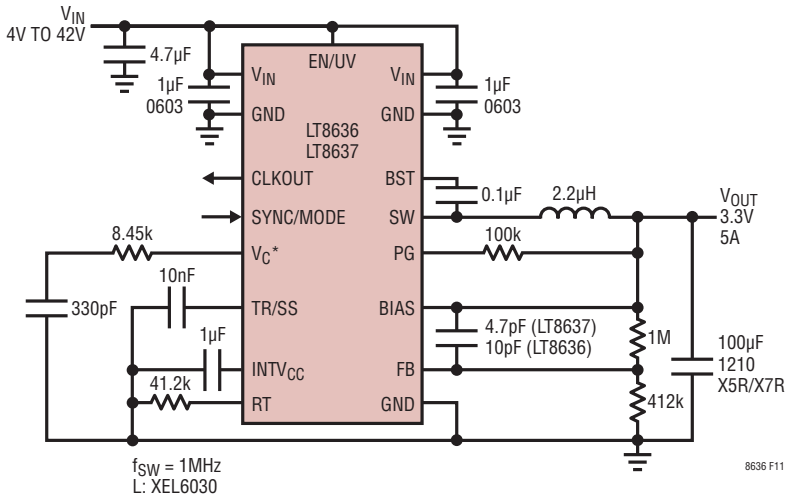

Figure 11. 3.3V, 5A Step-Down Converter with Soft-Start and Power Good

* V_C pin and components only apply to LT8637.

TYPICAL APPLICATIONS

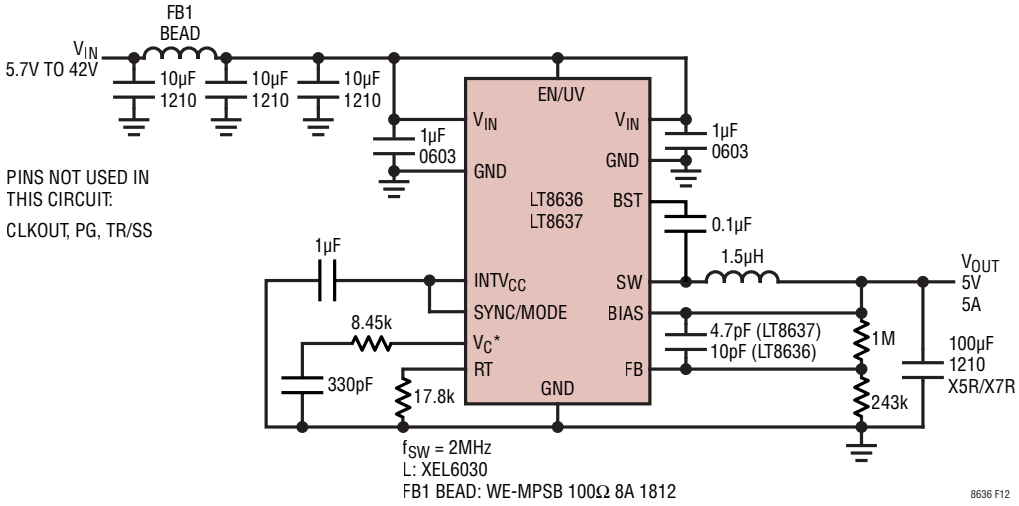

Figure 12. Ultralow EMI 5V, 5A Step-Down Converter with Spread Spectrum

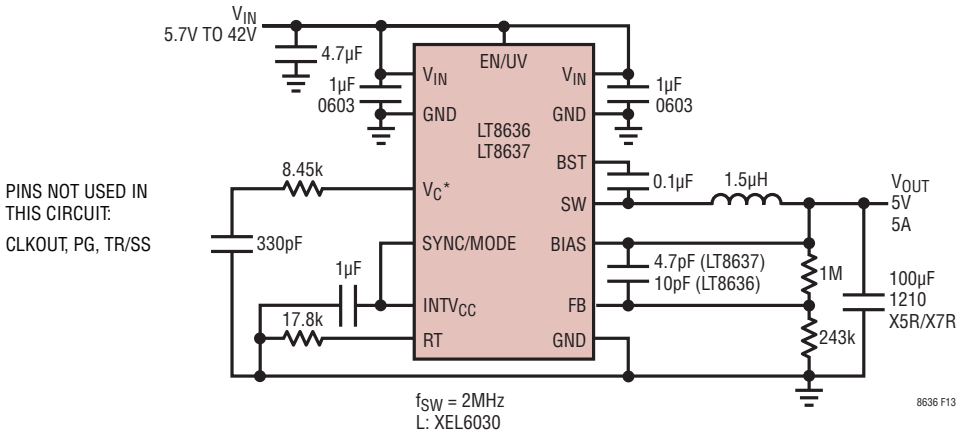

Figure 13. 2MHz 5V, 5A Step-Down Converter with Spread Spectrum

* V_C pin and components only apply to LT8637.

TYPICAL APPLICATIONS

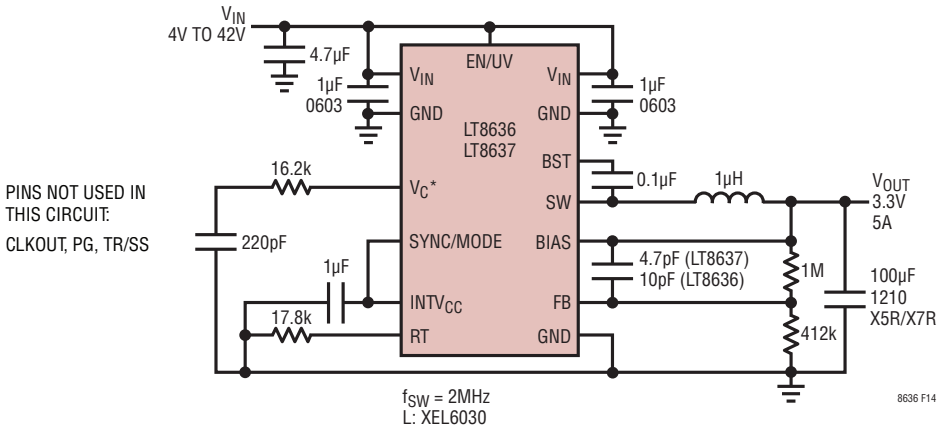

Figure 14. 2MHz 3.3V, 5A Step-Down Converter with Spread Spectrum

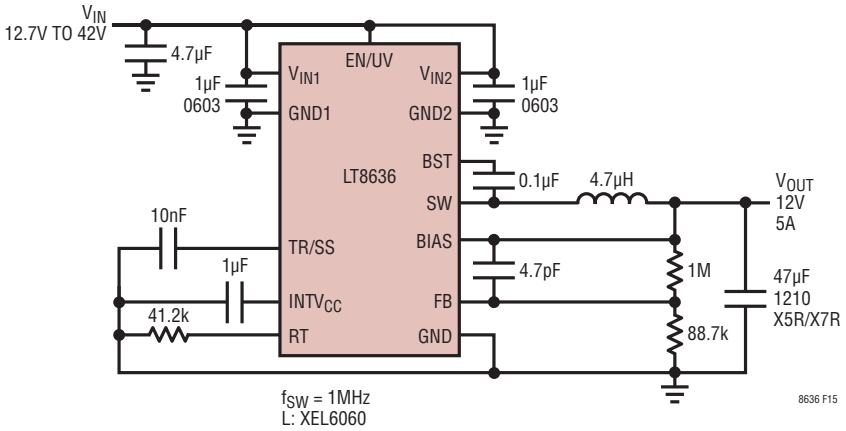

Figure 15. 12V, 5A Step-Down Converter

* V_C pin and components only apply to LT8637.

PACKAGE DESCRIPTION

LQFN Package
20-Lead (4mm × 3mm × 0.94mm)
(Reference LTC DWG # 05-08-1602 Rev A)

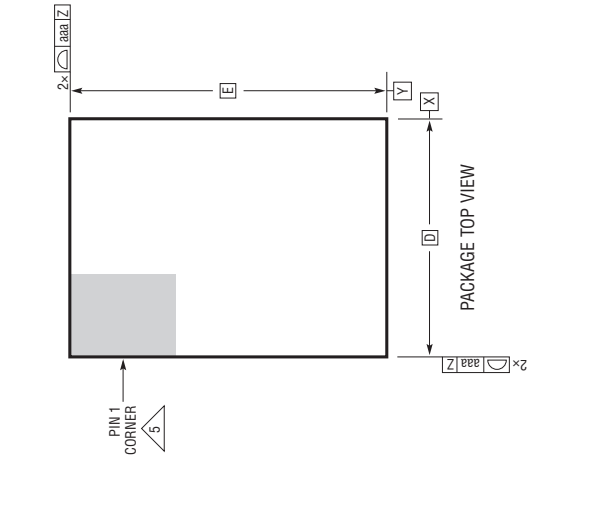

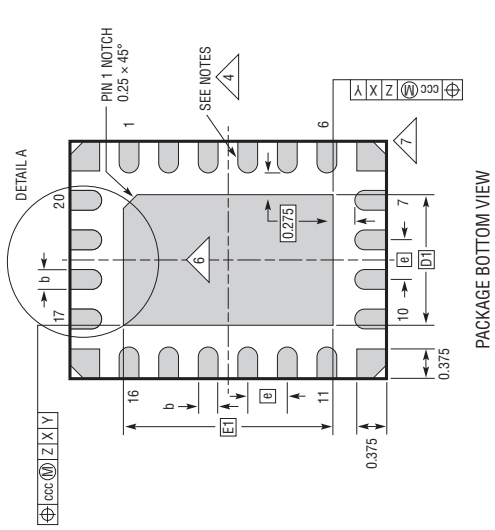

NOTES:
1. DIMENSIONING AND TOLERANCING PER ASME Y14.5M-1994
2. ALL DIMENSIONS ARE IN MILLIMETERS
3. PRIMARY DATUM -Z- IS SEATING PLANE
4. METAL FEATURES UNDER THE SOLDER MASK OPENING NOT SHOWN SO AS NOT TO OBSCURE THESE TERMINALS AND HEAT FEATURES
5. DETAILS OF PIN 1 IDENTIFIER ARE OPTIONAL, BUT MUST BE LOCATED WITHIN THE ZONE INDICATED. THE PIN 1 IDENTIFIER MAY BE EITHER A MOLD OR MARKED FEATURE
6. THE EXPOSED HEAT FEATURE MAY HAVE OPTIONAL CORNER RADII
7. CORNER SUPPORT PAD CHAMFER IS OPTIONAL

PACKAGE IN TRAY LOADING ORIENTATION

DIMENSIONS

SYMBOL	MIN	NOM	MAX	NOTES
A	0.85	0.94	1.03	
A1	0.01	0.02	0.03	
L	0.30	0.40	0.50	
b	0.22	0.25	0.28	
D		3.00		
E		4.00		
D1		1.65		
E1		2.65		
e		0.50		
H1		0.24 REF		SUBSTRATE THK
H2		0.70 REF		MOLD CAP HT
aaa			0.10	
bbb			0.10	
ccc			0.10	
ddd			0.10	
eee			0.15	
fff			0.08	

SUGGESTED PCB LAYOUT
TOP VIEW

Rev. E

REVISION HISTORY

REV	DATE	DESCRIPTION	PAGE NUMBER
A	11/19	Replaced 5A with 5/7A Peak in Title	1
		Replaced 7A Peak Output with 7A Peak Transient Output	1
		Replace Tracking with Power Good	1
		Added AEC-Q100 Quaified for Automotive Applications	1
		Clarified GND pin numbers in Pin Functions	10
		Clarified Equations 7, 8, 9	16-17
B	04/20	Added LT8636JV#WTRPBF to the Order Information Table	2
C	12/20	Added LT8637	All
		Added 8636MP	2, 4
D	06/24	Added High V_{OUT} Considerations Section to the Applications Information.	19
E	08/24	Replaced the Application Note AN-2582 with its English Version.	19

Information furnished by Analog Devices is believed to be accurate and reliable. However, no responsibility is assumed by Analog Devices for its use, nor for any infringements of patents or other rights of third parties that may result from its use. Specifications subject to change without notice. No license is granted by implication or otherwise under any patent or patent rights of Analog Devices.

TYPICAL APPLICATIONS

2MHz 1.8V, 5A Step-Down Converter

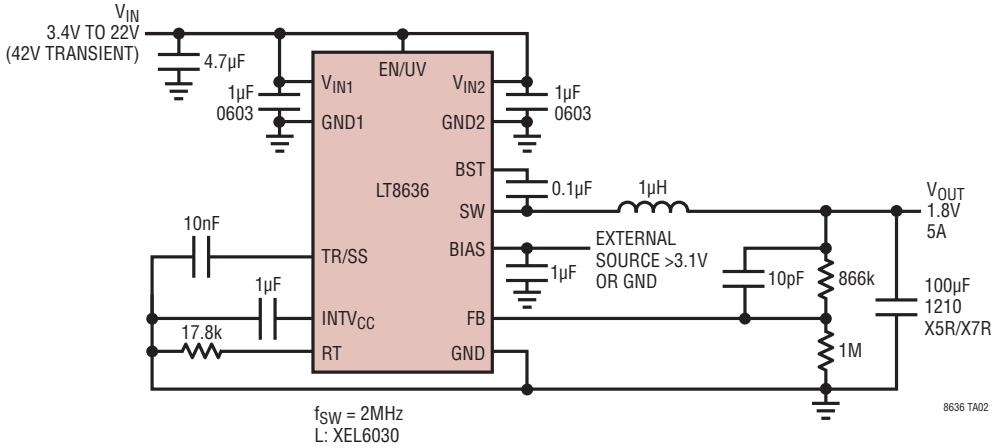

PINS NOT USED IN THIS CIRCUIT:
CLKOUT, PG, SYNC/MODE

RELATED PARTS

PART	DESCRIPTION	COMMENTS
LT8640S/ LT8643S	42V, 6A Synchronous Step-Down Silent Switcher 2 with I_Q = 2.5µA	$V_{IN(MIN)}$ = 3.4V, $V_{IN(MAX)}$ = 42V, $V_{OUT(MIN)}$ = 0.97V, I_Q = 2.5µA, I_{SD} < 1µA, 4mm × 4mm LQFN-24
LT8640/ LT8640-1	42V, 5A, 96% Efficiency, 3MHz Synchronous MicroPower Step-Down DC/DC Converter with I_Q = 2.5µA	$V_{IN(MIN)}$ = 3.4V, $V_{IN(MAX)}$ = 42V, $V_{OUT(MIN)}$ = 0.97V, I_Q = 2.5µA, I_{SD} < 1µA, 3mm × 4mm QFN-18
LT8645S/ LT8646S	65V, 8A, Synchronous Step-Down Silent Switcher 2 with I_Q = 2.5µA	$V_{IN(MIN)}$ = 3.4V, $V_{IN(MAX)}$ = 65V, $V_{OUT(MIN)}$ = 0.97V, I_Q = 2.5µA, I_{SD} < 1µA, 4mm × 6mm LQFN-32
LT8641	65V, 3.5A, 95% Efficiency, 3MHz Synchronous MicroPower Step-Down DC/DC Converter with I_Q = 2.5µA	$V_{IN(MIN)}$ = 3V, $V_{IN(MAX)}$ = 65V, $V_{OUT(MIN)}$ = 0.81V, I_Q = 2.5µA, I_{SD} < 1µA, 3mm × 4mm QFN-18
LT8609/ LT8609A	42V, 2A, 94% Efficiency, 2.2MHz Synchronous MicroPower Step-Down DC/DC Converter with I_Q = 2.5µA	$V_{IN(MIN)}$ = 3V, $V_{IN(MAX)}$ = 42V, $V_{OUT(MIN)}$ = 0.8V, I_Q = 2.5µA, I_{SD} < 1µA, MSOP-10E
LT8610A/ LT8610AB	42V, 3.5A, 96% Efficiency, 2.2MHz Synchronous MicroPower Step-Down DC/DC Converter with I_Q = 2.5µA	$V_{IN(MIN)}$ = 3.4V, $V_{IN(MAX)}$ = 42V, $V_{OUT(MIN)}$ = 0.97V, I_Q = 2.5µA, I_{SD} < 1µA, MSOP-16E
LT8610AC	42V, 3.5A, 96% Efficiency, 2.2MHz Synchronous MicroPower Step-Down DC/DC Converter with I_Q = 2.5µA	$V_{IN(MIN)}$ = 3V, $V_{IN(MAX)}$ = 42V, $V_{OUT(MIN)}$ = 0.8V, I_Q = 2.5µA, I_{SD} < 1µA, MSOP-16E
LT8610	42V, 2.5A, 96% Efficiency, 2.2MHz Synchronous MicroPower Step-Down DC/DC Converter with I_Q = 2.5µA	$V_{IN(MIN)}$ = 3.4V, $V_{IN(MAX)}$ = 42V, $V_{OUT(MIN)}$ = 0.97V, I_Q = 2.5µA, I_{SD} < 1µA, MSOP-16E
LT8616	42V, Dual 2.5A + 1.5A, 95% Efficiency, 2.2MHz Synchronous MicroPower Step-Down DC/DC Converter with I_Q = 5µA	$V_{IN(MIN)}$ = 3.4V, $V_{IN(MAX)}$ = 42V, $V_{OUT(MIN)}$ = 0.8V, I_Q = 5µA, I_{SD} < 1µA, TSSOP-28E, 3mm × 6mm QFN-28
LT8620	65V, 2.5A, 94% Efficiency, 2.2MHz Synchronous MicroPower Step-Down DC/DC Converter with I_Q = 2.5µA	$V_{IN(MIN)}$ = 3.4V, $V_{IN(MAX)}$ = 65V, $V_{OUT(MIN)}$ = 0.97V, I_Q = 2.5µA, I_{SD} < 1µA, MSOP-16E, 3mm × 5mm QFN-24
LT8614	42V, 4A, 96% Efficiency, 2.2MHz Synchronous Silent Switcher Step-Down DC/DC Converter with I_Q = 2.5µA	$V_{IN(MIN)}$ = 3.4V, $V_{IN(MAX)}$ = 42V, $V_{OUT(MIN)}$ = 0.97V, I_Q = 2.5µA, I_{SD} < 1µA, 3mm × 4mm QFN18
LT8612	42V, 6A, 96% Efficiency, 2.2MHz Synchronous MicroPower Step-Down DC/DC Converter with I_Q = 2.5µA	$V_{IN(MIN)}$ = 3.4V, $V_{IN(MAX)}$ = 42V, $V_{OUT(MIN)}$ = 0.97V, I_Q = 3.0µA, I_{SD} < 1µA, 3mm × 6mm QFN-28
LT8602	42V, Quad Output (2.5A + 1.5A + 1.5A + 1.5A) 95% Efficiency, 2.2MHz Synchronous MicroPower Step-Down DC/DC Converter with I_Q = 25µA	$V_{IN(MIN)}$ = 3V, $V_{IN(MAX)}$ = 42V, $V_{OUT(MIN)}$ = 0.8V, I_Q = 2.5µA, I_{SD} < 1µA, 6mm × 6mm QFN-40

© ANALOG DEVICES, INC. 2019-2024

Mouser Electronics

Authorized Distributor

Click to View Pricing, Inventory, Delivery & Lifecycle Information:

Analog Devices Inc.:

LT8636HV#PBF LT8636JV#PBF LT8636EV#PBF DC2918A LT8636MPV#PBF LT8636EV#WPBF