Photometric Front Ends

Data Sheet

ADPD105/ADPD106/ADPD107

FEATURES

Multifunction photometric front end
Fully integrated AFE, ADC, LED drivers, and timing core
Enables best-in-class ambient light rejection capability without the need for photodiode optical filters
Three 370 mA LED drivers
Flexible, multiple, short LED pulses per optical sample
20-bit burst accumulator enabling 20 bits per sample period
On-board sample to sample accumulator, enabling up to 27 bits per data read
Low power operation
SPI, I²C interface, and 1.8 V analog/digital core
Flexible sampling frequency ranging from 0.122 Hz to 3820 Hz
FIFO data operation

APPLICATIONS

Wearable health and fitness monitors
Clinical measurements, for example, SpO_2
Industrial monitoring
Background light measurements

GENERAL DESCRIPTION

The ADPD105/ADPD106/ADPD107 are highly efficient, photometric front ends, each with an integrated 14-bit analog-to-digital converter (ADC) and a 20-bit burst accumulator that works with flexible light emitting diode (LED) drivers. The accumulator is designed to stimulate an LED and measure the corresponding optical return signal. The data output and functional configuration occur over a 1.8 V I²C interface on the ADPD105 or SPI on the ADPD106 and ADPD107. The control circuitry includes flexible LED signaling and synchronous detection.

The analog front end (AFE) features best-in-class rejection of signal offset and corruption due to modulated interference commonly caused by ambient light.

Couple the ADPD105/ADPD106/ADPD107 with a low capacitance photodiode of <100 pF for optimal performance. The ADPD105/ADPD106/ADPD107 can be used with any LED. The ADPD105 is available in a 2.46 mm × 1.4 mm WLCSP and a 4 mm × 4 mm LFCSP. The SPI only versions, ADPD106 and ADPD107, are available in a 2.46 mm × 1.4 mm WLCSP.

Rev. A
Document Feedback
Information furnished by Analog Devices is believed to be accurate and reliable. However, no responsibility is assumed by Analog Devices for its use, nor for any infringements of patents or other rights of third parties that may result from its use. Specifications subject to change without notice. No license is granted by implication or otherwise under any patent or patent rights of Analog Devices. Trademarks and registered trademarks are the property of their respective owners.

One Technology Way, P.O. Box 9106, Norwood, MA 02062-9106, U.S.A.
Tel: 781.329.4700
©2017 Analog Devices, Inc. All rights reserved.
Technical Support
www.analog.com

TABLE OF CONTENTS

Features ... 1
Applications ... 1
General Description ... 1
Revision History ... 3
Functional Block Diagrams ... 4
Specifications ... 6
  Temperature and Power Specifications ... 6
  Performance Specifications ... 7
  Analog Specifications ... 8
  Digital Specifications ... 9
  Timing Specifications ... 10
Absolute Maximum Ratings ... 12
  Thermal Resistance ... 12
  Recommended Soldering Profile ... 12
  ESD Caution ... 12
Pin Configurations and Function Descriptions ... 13
Typical Performance Characteristics ... 17
Theory of Operation ... 19
  Introduction ... 19
  Dual Time Slot Operation ... 19
  Time Slot Switch ... 20
  Adjustable Sampling Frequency ... 22
  State Machine Operation ... 23
  Normal Mode Operation and Data Flow ... 23
  AFE Operation ... 25
  AFE Integration Offset Adjustment ... 25
  I^2C Serial Interface ... 27
  SPI Port ... 28
  Typical Connection Diagram ... 30
  LED Driver Pins and LED Supply Voltage ... 31
  LED Driver Operation ... 31
  Determining the Average Current ... 31
  Determining C_{VLED} ... 32
  LED Inductance Considerations ... 32
  Recommended Start-Up Sequence ... 33
  Reading Data ... 33
  Clocks and Timing Calibration ... 34
  Optional Timing Signals Available on GPIO0 and GPIO1 ... 35
  Calculating Current Consumption ... 37
  Optimizing SNR per Watt ... 38
  Optimizing Power by Disabling Unused Channels and Amplifiers ... 39
  TIA ADC Mode ... 40
  Digital Integrate Mode ... 42
  Pulse Connect Mode ... 45
  Synchronous ECG and PPG Measurement Using TIA ADC Mode ... 45
Register Listing ... 48
  LED Control Registers ... 52
  AFE Global Configuration Registers ... 54
  System Registers ... 59
  ADC Registers ... 63
  Data Registers ... 64
  Required Start-Up Load Procedure ... 64
Outline Dimensions ... 65
  Ordering Guide ... 66

REVISION HISTORY

1/2017—Rev. 0 to Rev. A

Added ADPD106 ..... Universal
Changes to Features Section and General Description Section 1
Changes to Figure 1 4
Added Figure 2; Renumbered Sequentially 5
Changes to Table 2 6
Changes to Table 9 12
Added Figure 6 and Table 11; Renumbered Sequentially 13
Added Figure 8 and Table 13 15
Changes to ADPD105 LFCSP Input Configurations Section 20
Added Register 0x14, PD1 to PD8 Input Configurations Section and Figure 19 to Figure 21 20
Added Table 16 and WLCSP Input Configurations Section 21
Changes to Register 0x14, PD1 to PD4 Input Configurations Section 21
Changes to Typical Connection Diagram Section 30
Added Figure 37 and Table 22 31
Added Measuring Voltages Using the Current Input Section, Figure 52, and Figure 53 47
Changes to Table 28 48
Updated Outline Dimensions 65
Changes to Ordering Guide 66

7/2016—Revision 0: Initial Version

FUNCTIONAL BLOCK DIAGRAMS

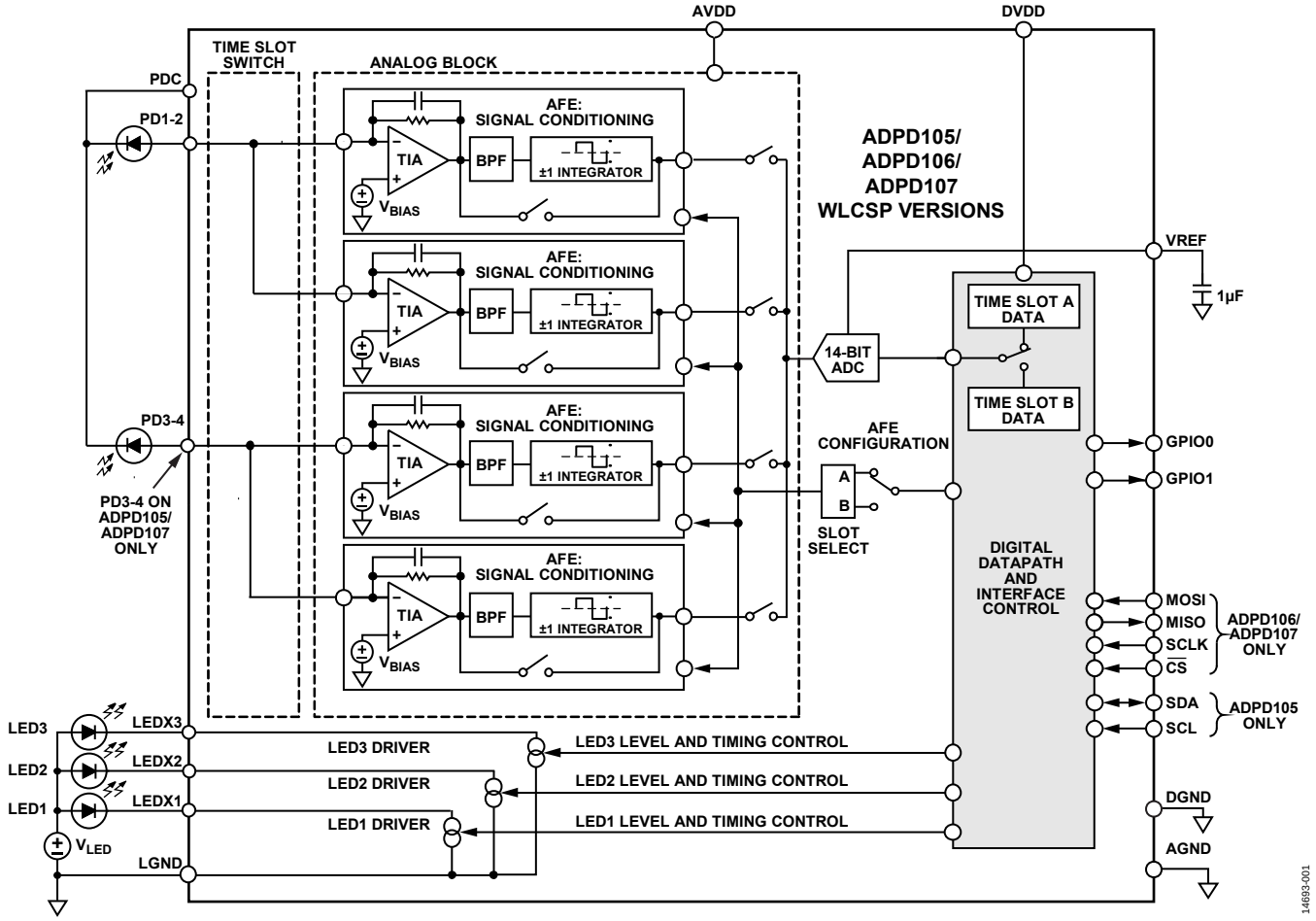

Figure 1. Block Diagram for ADPD105/ADPD106/ADPD107 WLCSP (Chip Scale Package) Versions

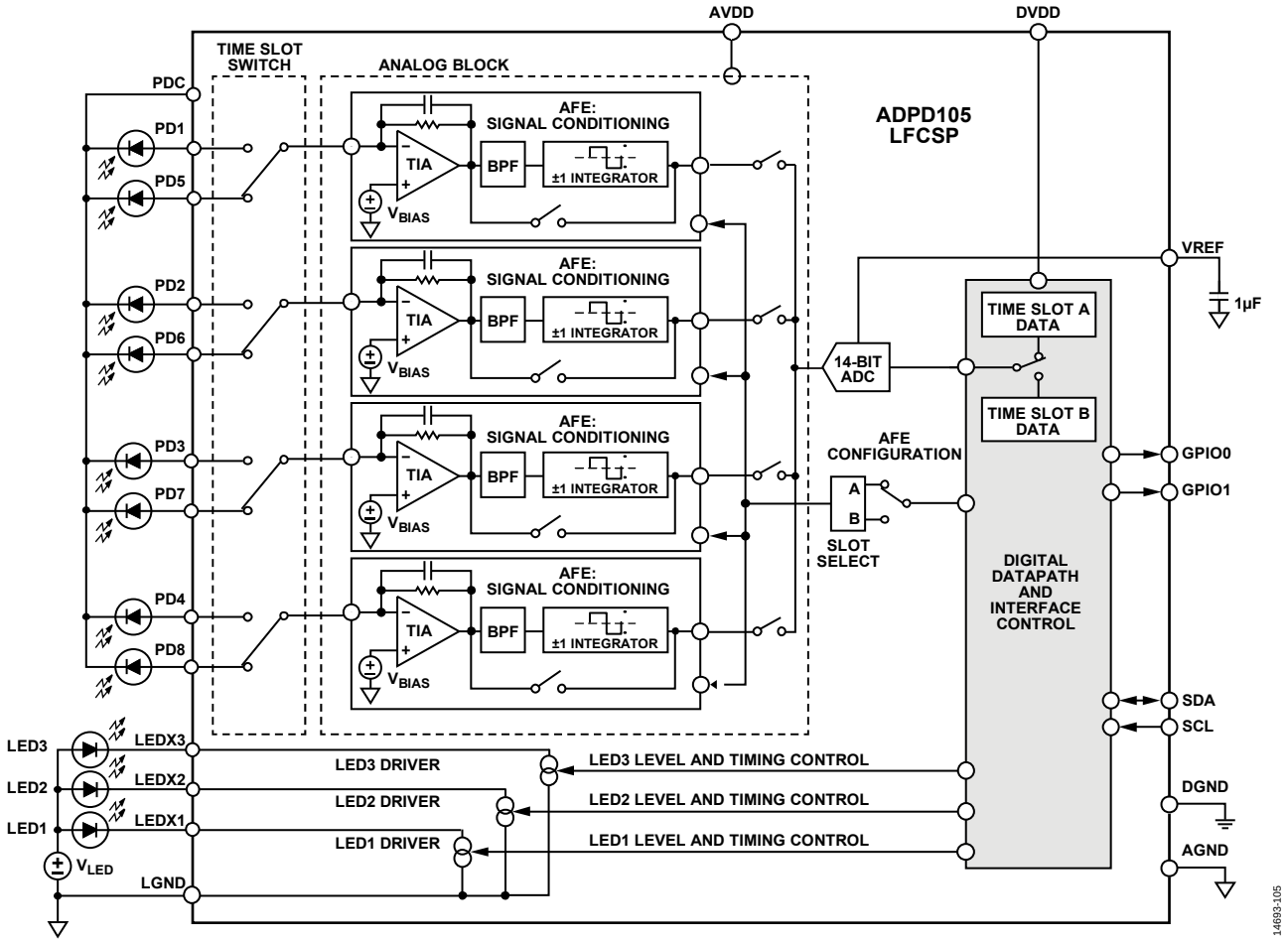

Figure 2. Block Diagram for ADPD105 LFCSP Version

SPECIFICATIONS

TEMPERATURE AND POWER SPECIFICATIONS

Table 1. Operating Conditions

Parameter	Test Conditions/Comments	Min	Typ	Max	Unit
TEMPERATURE RANGE					
Operating Range		−40		+85	°C
Storage Range		−65		+150	°C
POWER SUPPLY VOLTAGES					
V_{DD}	Applied at the AVDD and DVDD pins	1.7	1.8	1.9	V

AVDD = DVDD = 1.8 V, T_A = 25°C, unless otherwise noted.

Table 2. Current Consumption

Parameter	Symbol	Test Conditions/Comments	Min	Typ	Max	Unit
POWER SUPPLY (V_{DD}) CURRENT						
V_{DD} Supply Current[1]		SLOTx_LED_OFFSET = 25 µs; LED_PERIOD =19 µs; LED peak current = 25 mA, single-channel mode				
1 Pulse		100 Hz data rate; Time Slot A only		92		µA
		100 Hz data rate; Time Slot B only		75		µA
		100 Hz data rate; both Time Slot A and Time Slot B		119		µA
10 Pulses		100 Hz data rate; Time Slot A only		175		µA
		100 Hz data rate; Time Slot B only		155		µA
		100 Hz data rate; both Time Slot A and Time Slot B		281		µA
Peak V_{DD} Supply Current (1.8 V)	IV_{DD_PEAK}					
4-Channel Operation				9.3		mA
1-Channel Operation				4.5		mA
Standby Mode Current	$IV_{DD_STANDBY}$			0.3		µA
V_{LED} SUPPLY CURRENT[2]						
Average Supply Current						
V_{LEDA} or V_{LEDB}		Peak LED current = 25 mA; LED pulse width = 3 µs				
1 Pulse		50 Hz data rate		3.75		µA
		100 Hz data rate		7.5		µA
		200 Hz data rate		15		µA
10 Pulses		50 Hz data rate		38		µA
		100 Hz data rate		75		µA
		200 Hz data rate		150		µA

[1] V_{DD} is the voltage applied at the AVDD and DVDD pins.
[2] V_{LED} applies to the external LED supply voltage for any given LED being driven by the ADPD105/ADPD106/ADPD107 LED drivers under the listed conditions.

PERFORMANCE SPECIFICATIONS

AVDD = DVDD = 1.8 V, T_A = full operating temperature range, unless otherwise noted.

Table 3.

Parameter	Test Conditions/Comments	Min	Typ	Max	Unit
DATA ACQUISITION					
Resolution	Single pulse		14		Bits
Resolution/Sample	64 to 255 pulses		20		Bits
Resolution/Data Read	64 to 255 pulses and sample average = 128		27		Bits
LED DRIVER					
LED Current Slew Rate[1]					
Rise	Slew rate control setting = 0; T_A = 25°C; I_{LED} = 70 mA		240		mA/µs
	Slew rate control setting = 7; T_A = 25°C; I_{LED} = 70 mA		1400		mA/µs
Fall	Slew rate control setting = 0, 1, 2; T_A = 25°C; I_{LED} = 70 mA		3200		mA/µs
	Slew rate control setting = 6, 7; T_A = 25°C; I_{LED} = 70 mA		4500		mA/µs
LED Peak Current	LED pulse enabled			370	mA
Driver Compliance Voltage	Voltage above ground required for LED driver operation		0.6		V
LED PERIOD	AFE width = 4 µs[2]		19		µs
	AFE width = 3 µs		17		µs
Sampling Frequency[3]	Time Slot A only; normal mode; 1 pulse; SLOTA_LED_OFFSET = 23 µs; SLOTA_LED_PERIOD = 19 µs	0.122		3230	Hz
	Time Slot B only; normal mode; 1 pulse; SLOTA_LED_OFFSET = 23 µs; SLOTA_LED_PERIOD = 19 µs	0.122		3820	Hz
	Both time slots; normal mode; 1 pulse; SLOTA_LED_OFFSET = 23 µs; SLOTA_LED_PERIOD = 19 µs	0.122		1750	Hz
	Time Slot A only; normal mode; 8 pulses; SLOTA_LED_OFFSET = 23 µs; SLOTA_LED_PERIOD = 19 µs	0.122		2257	Hz
	Time Slot B only; normal mode; 8 pulses; SLOTA_LED_OFFSET = 23 µs; SLOTA_LED_PERIOD = 19 µs	0.122		2531	Hz
	Both time slots; normal mode; 8 pulses; SLOTA_LED_OFFSET = 23 µs; SLOTA_LED_PERIOD = 19 µs	0.122		1193	Hz
CATHODE PIN (PDC) VOLTAGE					
During All Sampling Periods	Register 0x54, Bit 7 = 0x0; Register 0x3C, Bit 9 = 1[4]		1.8		V
	Register 0x54, Bit 7 = 0x0; Register 0x3C, Bit 9 = 0		1.3		V
During Slot A Sampling	Register 0x54, Bit 7 = 0x1; Register 0x54, Bits[9:8] = 0x0[4]		1.8		V
	Register 0x54, Bit 7 = 0x1; Register 0x54, Bits[9:8] = 0x1		1.3		V
	Register 0x54, Bit 7 = 0x1; Register 0x54, Bits[9:8] = 0x2		1.55		V
	Register 0x54, Bit 7 = 0x1; Register 0x54, Bits[9:8] = 0x3[5]		0		V
During Slot B Sampling	Register 0x54, Bit 7 = 0x1; Register 0x54, Bits[11:10] = 0x0[4]		1.8		V
	Register 0x54, Bit 7 = 0x1; Register 0x54, Bits[11:10] = 0x1		1.3		V
	Register 0x54, Bit 7 = 0x1; Register 0x54, Bits[11:10] = 0x2		1.55		V
	Register 0x54, Bit 7 = 0x1; Register 0x54, Bits[11:10] = 0x3[5]		0		V
During Sleep Periods	Register 0x54, Bit 7 = 0x0; Register 0x3C, Bit 9 = 1		1.8		V
	Register 0x54, Bit 7 = 0x0; Register 0x3C, Bit 9 = 0		1.3		V
	Register 0x54, Bit 7 = 0x1; Register 0x54, Bits[13:12] = 0x0		1.8		V
	Register 0x54, Bit 7 = 0x1; Register 0x54, Bits[13:12] = 0x1		1.3		V
	Register 0x54, Bit 7 = 0x1; Register 0x54, Bits[13:12] = 0x2		1.55		V
	Register 0x54, Bit 7 = 0x1; Register 0x54, Bits[13:12] = 0x3		0		V
PHOTODIODE INPUT PINS/ ANODE VOLTAGE					
During All Sampling Periods			1.3		V
During Sleep Periods			Cathode voltage		V

[1] LED inductance is negligible for these values. The effective slew rate slows with increased inductance.
[2] Minimum LED period = (2 × AFE width) + 5 µs.
[3] The maximum values in this specification are the internal ADC sampling rates in normal mode. The I^2C read rates in some configurations may limit the output data rate.
[4] This mode may induce additional noise and is not recommended unless absolutely necessary. The 1.8 V setting uses V_{DD}, which contains greater amounts of differential voltage noise with respect to the anode voltage. A differential voltage between the anode and cathode injects a differential current across the capacitance of the photodiode of the magnitude of C × dV/dt.
[5] This setting is not recommended for photodiodes because it causes a 1.3 V forward bias of the photodiode.

ANALOG SPECIFICATIONS

AVDD = DVDD = 1.8 V, T_A = full operating temperature range, unless otherwise noted. Compensation of the AFE offset is explained in the AFE Operation section.

Table 4.

Parameter	Test Conditions/Comments	Min	Typ	Max	Unit
INPUT CAPACITANCE				100	pF
PULSED SIGNAL CONVERSIONS, 3 µs WIDE LED PULSE[1]	4 µs wide AFE integration; normal operation, Register 0x43/Register 0x45 = 0xADA5				
ADC Resolution[2]	Transimpedance amplifier (TIA) feedback resistor				
	25 kΩ		3.27		nA/LSB
	50 kΩ		1.64		nA/LSB
	100 kΩ		0.82		nA/LSB
	200 kΩ		0.41		nA/LSB
ADC Saturation Level	TIA feedback resistor				
	25 kΩ		26.8		µA
	50 kΩ		13.4		µA
	100 kΩ		6.7		µA
	200 kΩ		3.35		µA
Ambient Signal Headroom on Pulsed Signal	TIA feedback resistor				
	25 kΩ		23.6		µA
	50 kΩ		11.8		µA
	100 kΩ		5.9		µA
	200 kΩ		2.95		µA
PULSED SIGNAL CONVERSIONS, 2 µs WIDE LED PULSE[1]	3 µs wide AFE integration; normal operation, Register 0x43/Register 0x45 = 0xADA5				
ADC Resolution[2]	TIA feedback resistor				
	25 kΩ		4.62		nA/LSB
	50 kΩ		2.31		nA/LSB
	100 kΩ		1.15		nA/LSB
	200 kΩ		0.58		nA/LSB
ADC Saturation Level	TIA feedback resistor				
	25 kΩ		37.84		µA
	50 kΩ		18.92		µA
	100 kΩ		9.46		µA
	200 kΩ		4.73		µA
Ambient Signal Headroom on Pulsed Signal	TIA feedback resistor				
	25 kΩ		12.56		µA
	50 kΩ		6.28		µA
	100 kΩ		3.14		µA
	200 kΩ		1.57		µA
FULL SIGNAL CONVERSIONS[3]					
TIA Saturation Level of Pulsed Signal and Ambient Level	TIA feedback resistor				
	25 kΩ		50.4		µA
	50 kΩ		25.2		µA
	100 kΩ		12.6		µA
	200 kΩ		6.3		µA

Parameter	Test Conditions/Comments	Min	Typ	Max	Unit
SYSTEM PERFORMANCE					
Total Output Noise Floor	Normal mode; per pulse; per channel; no LED; photodiode capacitance (C_{PD}) = 70 pF				
	25 kΩ; referred to ADC input		1.0		LSB rms
	25 kΩ; referred to peak input signal for 2 µs LED pulse		4.6		nA rms
	25 kΩ; referred to peak input signal for 3 µs LED pulse		3.3		nA rms
	25 kΩ; saturation signal-to-noise ratio (SNR) per pulse per channel[4]		78.3		dB
	50 kΩ; referred to ADC input		1.2		LSB rms
	50 kΩ; referred to peak input signal for 2 µs LED pulse		2.8		nA rms
	50 kΩ; referred to peak input signal for 3 µs LED pulse		2.0		nA rms
	50 kΩ; saturation SNR per pulse per channel[4]		76.6		dB
	100 kΩ; referred to ADC input		1.7		LSB rms
	100 kΩ; referred to peak input signal for 2 µs LED pulse		1.9		nA rms
	100 kΩ; referred to peak input signal for 3 µs LED pulse		1.4		nA rms
	100 kΩ; saturation SNR per pulse per channel[4]		73.6		dB
	200 kΩ; referred to ADC input		2.75		LSB rms
	200 kΩ; referred to peak input signal for 2 µs LED pulse		1.6		nA rms
	200 kΩ; referred to peak input signal for 3 µs LED pulse		1.1		nA rms
	200 kΩ; saturation SNR per pulse per channel[4]		69.5		dB
DC Power Supply Rejection Ratio (DC PSRR)			−37		dB

[1] This saturation level applies to the ADC only and, therefore, includes only the pulsed signal. Any nonpulsatile signal is removed prior to the ADC stage.
[2] ADC resolution is listed per pulse when the AFE offset is correctly compensated per the AFE Operation section. If using multiple pulses, divide by the number of pulses.
[3] This saturation level applies to the full signal path and, therefore, includes both the ambient signal and the pulsed signal.
[4] The noise term of the saturation SNR value refers to the receive noise only and does not include photon shot noise or any noise on the LED signal itself.

DIGITAL SPECIFICATIONS

DVDD = 1.7 V to 1.9 V, unless otherwise noted.

Table 5.

Parameter	Symbol	Test Conditions/Comments	Min	Typ	Max	Unit
LOGIC INPUTS (GPIOx, SCL, SDA, SCLK, MOSI, $\overline{CS}$)						
Input Voltage Level						
High	V_{IH}		0.7 × DVDD		3.6	V
Low	V_{IL}				0.3 × DVDD	V
Input Current Level						
High	I_{IH}		−10		+10	µA
Low	I_{IL}		−10		+10	µA
Input Capacitance	C_{IN}			10		pF
LOGIC OUTPUTS						
Output Voltage Level		GPIOx, MOSI				
High	V_{OH}	2 mA high level output current	DVDD − 0.5			V
Low	V_{OL}	2 mA low level output current			0.5	V
Output Voltage Level		SDA				
Low	V_{OL1}	2 mA low level output current			0.2 × DVDD	V
Output Current Level		SDA				
Low	I_{OL}	V_{OL1} = 0.6 V	6			mA

TIMING SPECIFICATIONS

Table 6. I²C Timing Specifications

Parameter	Symbol	Test Conditions/Comments	Min	Typ	Max	Unit
I²C PORT[1]		See Figure 3				
SCL						
Frequency				400		kHz
Minimum Pulse Width						
High	t_1		600			ns
Low	t_2		1300			ns
Start Condition						
Hold Time	t_3		600			ns
Setup Time	t_4		600			ns
SDA Setup Time	t_5		100			ns
SCL and SDA						
Rise Time	t_6				1000	ns
Fall Time	t_7				300	ns
Stop Condition						
Setup Time	t_8		600			ns

[1] Guaranteed by design.

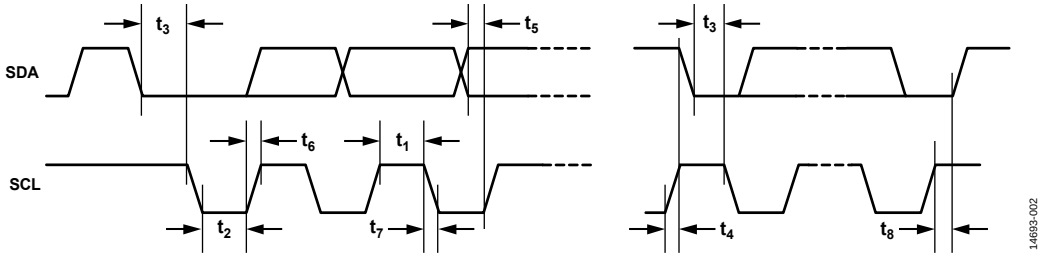

Figure 3. I²C Timing Diagram

Table 7. SPI Timing Specifications

Parameter	Symbol	Test Conditions/Comments	Min	Typ	Max	Unit
SPI PORT						
SCLK						
Frequency	f_{SCLK}				10	MHz
Minimum Pulse Width						
High	$t_{SCLKPWH}$		20			ns
Low	$t_{SCLKPWL}$		20			ns
$\overline{CS}$						
Setup Time	$t_{\overline{CS}S}$	$\overline{CS}$ setup to SCLK rising edge	10			ns
Hold Time	$t_{\overline{CS}H}$	$\overline{CS}$ hold from SCLK rising edge	10			ns
Pulse Width High	$t_{\overline{CS}PWH}$	$\overline{CS}$ pulse width high	10			ns
MOSI						ns
Setup Time	t_{MOSIS}	MOSI setup to SCLK rising edge	10			ns
Hold Time	t_{MOSIH}	MOSI hold from SCLK rising edge	10			
MISO Output Delay	t_{MISOD}	MISO valid output delay from SCLK falling edge			20	ns

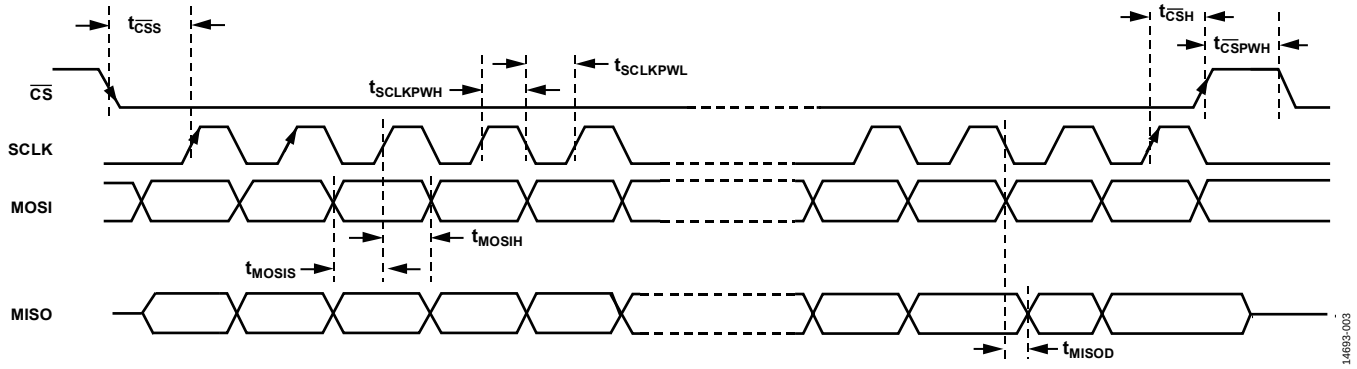

Figure 4. SPI Timing Diagram

ABSOLUTE MAXIMUM RATINGS

Table 8.

Parameter	Rating
AVDD to AGND	−0.3 V to +2.2 V
DVDD to DGND	−0.3 V to +2.2 V
GPIO0 to DGND	−0.3 V to +2.2 V
GPIO1 to DGND	−0.3 V to +2.2 V
LEDXx to LGND	−0.3 V to +3.6 V
SCL to DGND	−0.3 V to +3.9 V
SDA to DGND	−0.3 V to +3.9 V
Junction Temperature	150°C
ESD	
Human Body Model (HBM)	1500 V
Charged Device Model (CDM)	500 V
Machine Model (MM)	100 V

Stresses at or above those listed under Absolute Maximum Ratings may cause permanent damage to the product. This is a stress rating only; functional operation of the product at these or any other conditions above those indicated in the operational section of this specification is not implied. Operation beyond the maximum operating conditions for extended periods may affect product reliability.

THERMAL RESISTANCE

Thermal performance is directly linked to printed circuit board (PCB) design and operating environment. Close attention to PCB thermal design is required.

Table 9. Thermal Resistance

Package Type	θ_{JA}	Unit
CP-28-5	54.9	°C/W
CB-16-18	60	°C/W
CB-17-1	60	°C/W

RECOMMENDED SOLDERING PROFILE

Figure 5 and Table 10 provide details about the recommended soldering profile.

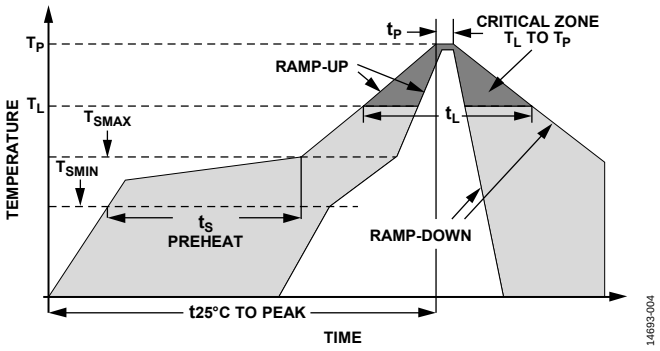

Figure 5. Recommended Soldering Profile

Table 10. Recommended Soldering Profile

Profile Feature	Condition (Pb-Free)
Average Ramp Rate (T_L to T_P)	3°C/sec max
Preheat	
Minimum Temperature (T_{SMIN})	150°C
Maximum Temperature (T_{SMAX})	200°C
Time (T_{SMIN} to T_{SMAX}) (t_S)	60 sec to 180 sec
T_{SMAX} to T_L Ramp-Up Rate	3°C/sec maximum
Time Maintained Above Liquidous Temperature	
Liquidous Temperature (T_L)	217°C
Time (t_L)	60 sec to 150 sec
Peak Temperature (T_P)	+260 (+0/−5)°C
Time Within 5°C of Actual Peak Temperature (t_P)	<30 sec
Ramp-Down Rate	6°C/sec maximum
Time from 25°C to Peak Temperature	8 minutes maximum

ESD CAUTION

ESD (electrostatic discharge) sensitive device. Charged devices and circuit boards can discharge without detection. Although this product features patented or proprietary protection circuitry, damage may occur on devices subjected to high energy ESD. Therefore, proper ESD precautions should be taken to avoid performance degradation or loss of functionality.

PIN CONFIGURATIONS AND FUNCTION DESCRIPTIONS

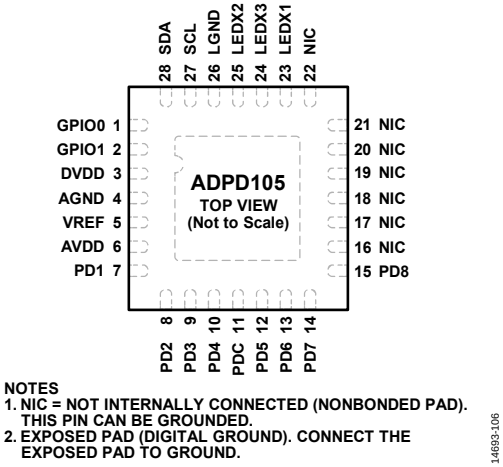

Figure 6. 28-Lead LFCSP Pin Configuration (ADPD105)

Table 11. 28-Lead LFCSP Pin Function Descriptions

Pin No.	Mnemonic	Type[1]	Description
1	GPIO0	DIO	General-Purpose Input/Output (I/O). This pin is used for interrupts and various clocking options.
2	GPIO1	DIO	General-Purpose I/O. This pin is used for interrupts and various clocking options.
3	DVDD	S	1.8 V Digital Supply.
4	AGND	S	Analog Ground.
5	VREF	REF	Internally Generated ADC Voltage Reference. Buffer this pin with a 1 µF capacitor to AGND.
6	AVDD	S	1.8 V Analog Supply.
7	PD1	AI	Photodiode Current Input (Anode). If not in use, leave this pin floating.
8	PD2	AI	Photodiode Current Input (Anode). If not in use, leave this pin floating.
9	PD3	AI	Photodiode Current Input (Anode). If not in use, leave this pin floating.
10	PD4	AI	Photodiode Current Input (Anode). If not in use, leave this pin floating.
11	PDC	AO	Photodiode Common Cathode Bias.
12	PD5	AI	Photodiode Current Input (Anode). If not in use, leave this pin floating.
13	PD6	AI	Photodiode Current Input (Anode). If not in use, leave this pin floating.
14	PD7	AI	Photodiode Current Input (Anode). If not in use, leave this pin floating.
15	PD8	AI	Photodiode Current Input (Anode). If not in use, leave this pin floating.
16 to 22	NIC	R	Not Internally Connected (Nonbonded Pad). This pin can be grounded.
23	LEDX1	AO	LED Driver 1 Current Sink. If not in use, leave this pin floating.
24	LEDX3	AO	LED Driver 3 Current Sink. If not in use, leave this pin floating.
25	LEDX2	AO	LED Driver 2 Current Sink. If not in use, leave this pin floating.
26	LGND	S	LED Driver Ground.
27	SCL	DI	I^2C Clock Input.
28	SDA	DIO	I^2C Data Input/Output.
	EPAD (DGND)	S	Exposed Pad (Digital Ground). Connect the exposed pad to ground.

[1] DIO means digital input/output, S means supply, REF means voltage reference, AI means analog input, AO means analog output, R means reserved, and DI means digital input.

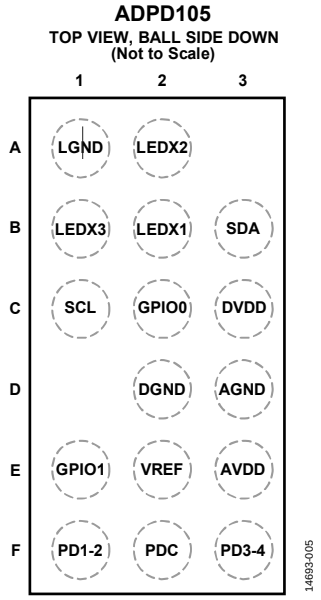

Figure 7. ADPD105 Pin Configuration

Table 12. ADPD105 Pin Function Descriptions

Pin No.	Mnemonic	Type[1]	Description
A1	LGND	S	LED Driver Ground.
A2	LEDX2	AO	LED Driver 2 Current Sink. If not in use, leave this pin floating.
B1	LEDX3	AO	LED Driver 3 Current Sink. If not in use, leave this pin floating.
B2	LEDX1	AO	LED Driver 1 Current Sink. If not in use, leave this pin floating.
B3	SDA	DIO	I^2C Data Input/Output (I/O).
C1	SCL	DI	I^2C Clock Input.
C2	GPIO0	DIO	General Purpose I/O. This pin is used for interrupts and various clocking options.
C3	DVDD	S	1.8 V Digital Supply.
D2	DGND	S	Digital Ground.
D3	AGND	S	Analog Ground.
E1	GPIO1	DIO	General Purpose I/O. This pin is used for interrupts and various clocking options.
E2	VREF	REF	Internally Generated ADC Voltage Reference. Buffer this pin with a 1 µF capacitor to AGND.
E3	AVDD	S	1.8 V Analog Supply.
F1	PD1-2	AI	Photodiode Combined Current Input of Photodiode 1 (PD1) and Photodiode 2 (PD2). If not in use, leave this pin floating.
F2	PDC	AO	Photodiode Common Cathode Bias.
F3	PD3-4	AI	Photodiode Combined Current Input of Photodiode 3 (PD3) and Photodiode 4 (PD4). If not in use, leave this pin floating.

[1] S means supply, AO means analog output, DIO means digital input/output, DI means digital input, REF means voltage reference, AI means analog input, and AO means analog output.

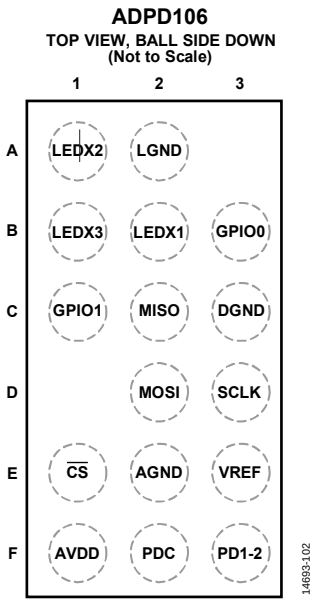

Figure 8. 16-Ball WLCSP Pin Configuration (ADPD106)

Table 13. 16-Ball WLCSP Pin Function Descriptions

Pin No.	Mnemonic	Type[1]	Description
A1	LEDX2	AO	LED Driver 2 Current Sink. If not in use, leave this pin floating.
A2	LGND	S	LED Driver Ground
B1	LEDX3	AO	LED Driver 3 Current Sink. If not in use, leave this pin floating.
B2	LEDX1	AO	LED Driver 1 Current Sink. If not in use, leave this pin floating.
B3	GPIO0	DIO	General Purpose I/O. This pin is used for interrupts and various clocking options.
C1	GPIO1	DIO	General Purpose I/O. This pin is used for interrupts and various clocking options.
C2	MISO	DO	SPI Data Output.
C3	DGND	S	Digital Ground.
D2	MOSI	DI	SPI Data Input.
D3	SCLK	DI	SPI Clock Input.
E1	$\overline{CS}$	DI	SPI Chip Select, Active Low.
E2	AGND	S	Analog Ground.
E3	VREF	REF	Internally Generated ADC Voltage Reference. Buffer this pin with a 1 µF capacitor to AGND.
F1	AVDD	S	1.8 V Analog Supply.
F2	PDC	AO	Photodiode Common Cathode Bias.
F3	PD1-2	AI	Photodiode Combined Current Input of PD1 and PD2. If not in use, leave this pin floating.

[1] AO means analog output, S means supply, DIO means digital input/output, DO means digital output, DI means digital input, REF means voltage reference, and AI means analog input.

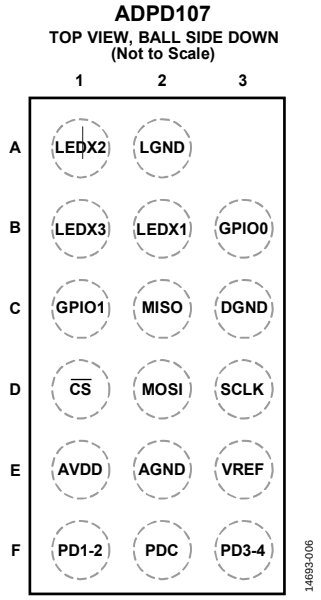

Figure 9. ADPD107 Pin Configuration

Table 14. ADPD107 Pin Function Descriptions

Pin No.	Mnemonic	Type[1]	Description
A1	LEDX2	AO	LED Driver 2 Current Sink. If not in use, leave this pin floating.
A2	LGND	S	LED Driver Ground.
B1	LEDX3	AO	LED Driver 3 Current Sink. If not in use, leave this pin floating.
B2	LEDX1	AO	LED Driver 1 Current Sink. If not in use, leave this pin floating.
B3	GPIO0	DIO	General Purpose I/O. This pin is used for interrupts and various clocking options.
C1	GPIO1	DIO	General Purpose I/O. This pin is used for interrupts and various clocking options.
C2	MISO	DO	Master Input, Slave Output.
C3	DGND	S	Digital Ground.
D1	$\overline{CS}$	DI	SPI Chip Select. Active low.
D2	MOSI	DI	Master Output, Slave Input.
D3	SCLK	DI	SPI Clock Input.
E1	AVDD	S	1.8 V Analog Supply.
E2	AGND	S	Analog Ground.
E3	VREF	REF	Internally Generated ADC Voltage Reference. Buffer this pin with a 1 µF capacitor to AGND.
F1	PD1-2	AI	Photodiode Combined Current Input of PD1 and PD2. If not in use, leave this pin floating.
F2	PDC	AO	Photodiode Common Cathode Bias.
F3	PD3-4	AI	Photodiode Combined Current Input of PD3 and PD4. If not in use, leave this pin floating.

[1] AO means analog output, S means supply, DIO means digital input/output, DO means digital output, DI means digital input, REF means voltage reference, and AI means analog input.

TYPICAL PERFORMANCE CHARACTERISTICS

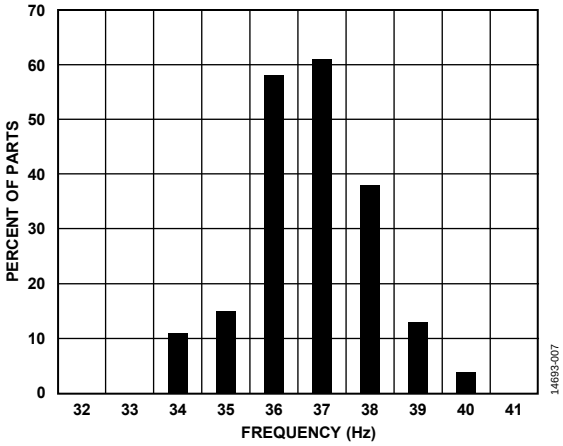

Figure 10. 32 kHz Clock Frequency Distribution (Default Settings, Before User Calibration: Register 0x4B = 0x2612)

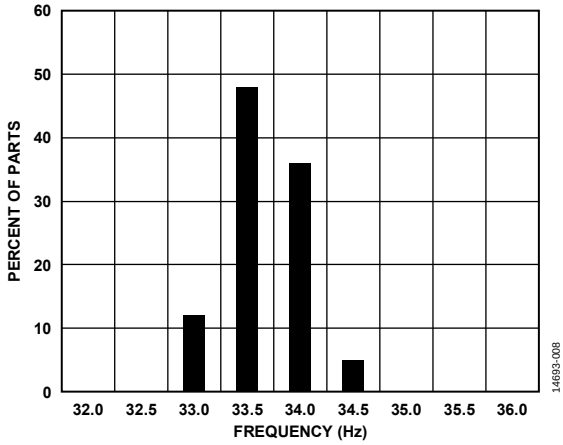

Figure 11. 32 MHz Clock Frequency Distribution (Default Settings, Before User Calibration: Register 0x4D = 0x0098)

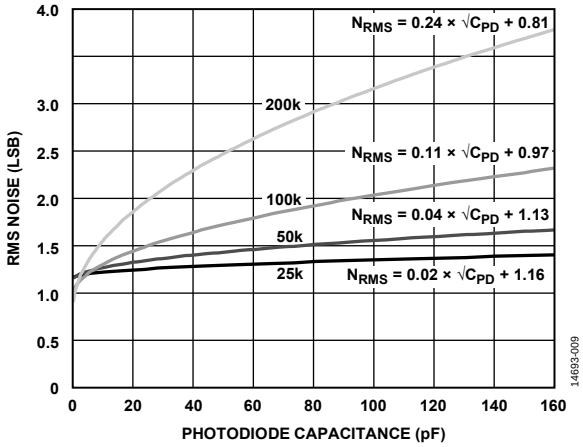

Figure 12. RMS Noise vs. Photodiode Capacitance

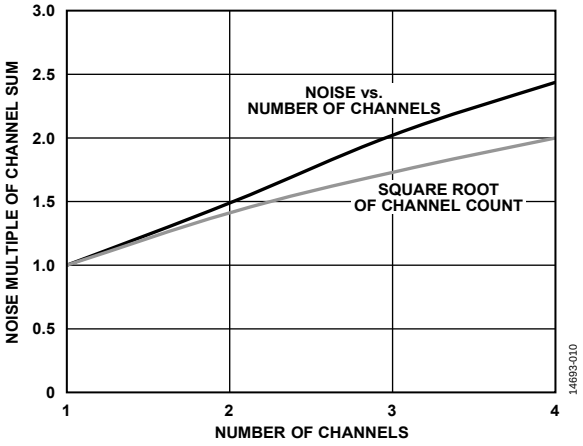

Figure 13. Noise Multiple of Channel Sum vs. Number of Channels

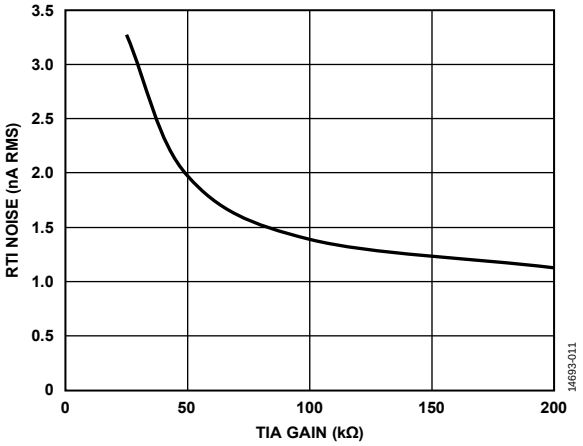

Figure 14. Referred to Input (RTI) Noise vs. TIA Gain

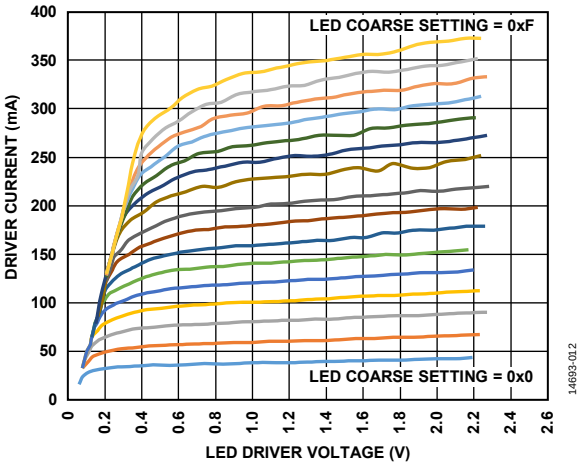

Figure 15. LED Driver Current vs. LED Driver Voltage at Various Coarse Settings

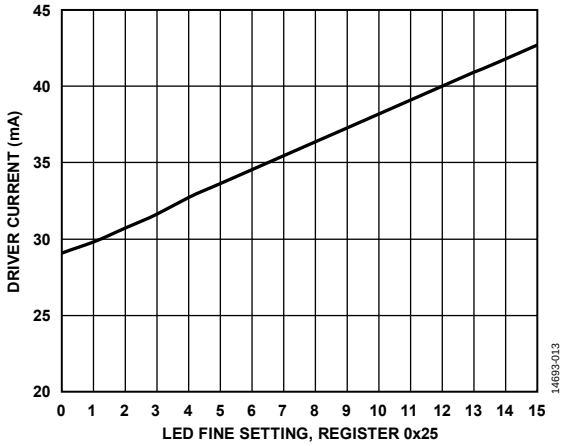

Figure 16. LED Driver Current vs. LED Fine Setting (Coarse Setting = 0x0)

Figure 17. LED Driver Current vs. LED Fine Setting (Coarse Setting = 0xF)

THEORY OF OPERATION

INTRODUCTION

The ADPD105/ADPD106/ADPD107 operate as a complete optical transceiver stimulating up to three LEDs and measuring the return signal on up to two separate current inputs. The core consists of a photometric front end coupled with an ADC, digital block, and three independent LED drivers. The core circuitry stimulates the LEDs and measures the return in the analog block through one to eight photodiode inputs, storing the results in discrete data locations. The two inputs can be configured to drive four simultaneous input channels. Data can be read directly by a register, or through a FIFO. This highly integrated system includes an analog signal processing block, digital signal processing block, I²C communication interface on the ADPD105 or an SPI port on the ADPD107, and programmable pulsed LED current sources.

The LED driver is a current sink and is agnostic to LED supply voltage and LED type. The photodiode (PDx) inputs can accommodate any photodiode with an input capacitance of less than 100 pF. The ADPD105/ADPD106/ADPD107 are designed to produce a high SNR for relatively low LED power while greatly reducing the effect of ambient light on the measured signal.

DUAL TIME SLOT OPERATION

The ADPD105/ADPD106/ADPD107 operate in two independent time slots, Time Slot A and Time Slot B, which are carried out sequentially. The entire signal path from LED stimulation to data capture and processing is executed during each time slot. Each time slot has a separate datapath that uses independent settings for the LED driver, AFE setup, and the resulting data. Time Slot A and Time Slot B operate in sequence for every sampling period, as shown in Figure 18.

The timing parameters are defined as follows:

$$t_A\ (\mu s) = SLOTA_LED_OFFSET + n_A \times SLOTA_LED_PERIOD$$

where n_A is the number of pulses for Time Slot A (Register 0x31, Bits[15:8]).

$$t_B\ (\mu s) = SLOTB_LED_OFFSET + n_B \times SLOTB_LED_PERIOD$$

where n_B is the number of pulses for Time Slot B (Register 0x36, Bits[15:8]).

Calculate the LED period using the following equation:

$$LED_PERIOD,\ minimum = 2 \times AFE_WIDTH + 11$$

t_1 and t_2 are fixed and based on the computation time for each slot. If a slot is not in use, these times do not add to the total active time. Table 15 defines the values for these LED and sampling time parameters.

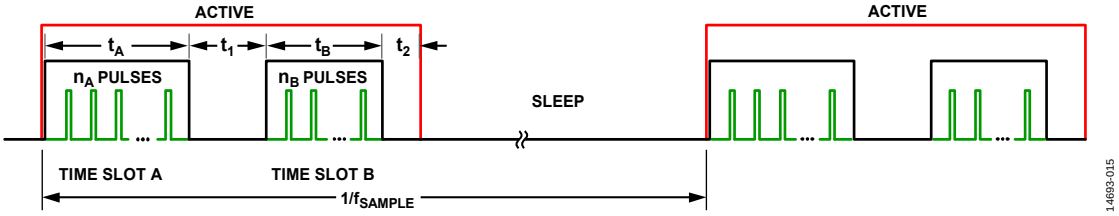

Figure 18. Time Slot Timing Diagram

Table 15. LED Timing and Sample Timing Parameters

Parameter	Register	Bits	Test Conditions/Comments	Min	Typ	Max	Unit
SLOTA_LED_OFFSET[1]	0x30	[7:0]	Delay from power-up to LEDA rising edge	23		63	µs
SLOTB_LED_OFFSET[1]	0x35	[7:0]	Delay from power-up to LEDB rising edge	23		63	µs
SLOTA_LED_PERIOD[2]	0x31	[7:0]	Time between LED pulses in Time Slot A; SLOTx_AFE_WIDTH = 4 µs	19		63	µs
SLOTB_LED_PERIOD[2]	0x36	[7:0]	Time between LED pulses in Time Slot B; SLOTx_AFE_WIDTH = 4 µs	19		63	µs
t_1			Compute time for Time Slot A		68		µs
t_2			Compute time for Time Slot B		20		µs
t_{SLEEP}			Sleep time between sample periods	222			µs

[1] Setting the SLOTx_LED_OFFSET below the specified minimum value may cause failure of ambient light rejection for large photodiodes.
[2] Setting the SLOTx_LED_PERIOD below the specified minimum value can cause invalid data captures.

TIME SLOT SWITCH

ADPD105 LFCSP Input Configurations

Up to eight photodiodes (PD1 to PD8) can be connected to the ADPD105 in the LFCSP package. The photodiode anodes are connected to the PD1 to PD8 input pins; the photodiode cathodes are connected to the cathode pin, PDC. The anodes are assigned in three different configurations depending on the settings of Register 0x14 (see Figure 22, Figure 23, and Figure 21).

A switch sets which photodiode group is connected during Time Slot A and Time Slot B. See Table 17 for the time slot switch registers. It is important to leave any unused inputs floating for proper operation of the devices. The photodiode inputs are current inputs and as such, these pins are also considered to be voltage outputs. Tying these inputs to a voltage may saturate the analog block.

Register 0x14, PD1 to PD8 Input Configurations

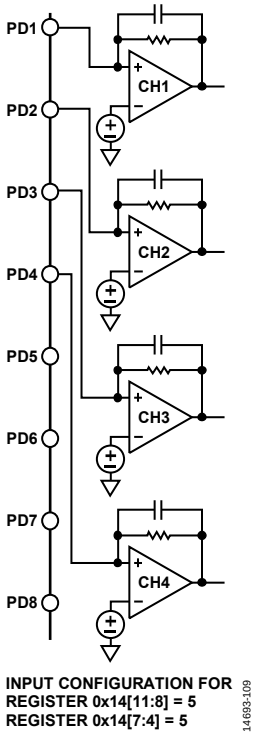

Figure 19. PD1 to PD4 Connection

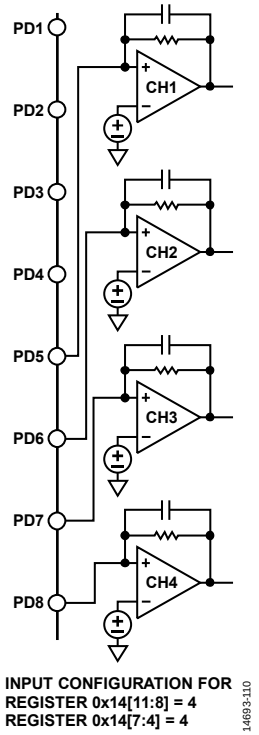

Figure 20. PD5 to PD8 Connection

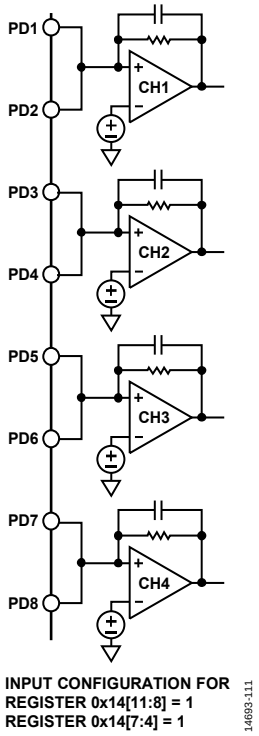

Figure 21. 2 to 1 PD Current Summation

Table 16. Time Slot Switch (Register 0x14)

Address	Bits	Name	Description
0x14	[11:8]	SLOTB_PD_SEL	Selects connection of photodiode for Time Slot B as shown in Figure 22, Figure 23, and Figure 21. 0x0: inputs are floating in Time Slot B. 0x1: all PDx pins (PD1 to PD8) are connected during Time Slot B. 0x4: PD5 to PD8 are connected during Time Slot B. 0x5: PD1 to PD4 are connected during Time Slot B. Other: reserved.
	[7:4]	SLOTA_PD_SEL	Selects connection of photodiode for Time Slot A as shown in Figure 22, Figure 23, and Figure 21. 0x0: inputs are floating in Time Slot A. 0x1: all PDx pins (PD1 to PD8) are connected during Time Slot A. 0x4: PD5 to PD8 are connected during Time Slot A. 0x5: PD1 to PD4 are connected during Time Slot A. Other: reserved.

WLCSP Input Configurations

Up to two photodiodes can be connected to four channels of the ADPD105 and ADPD107 WLCSP models. The ADPD106 accommodates a single photodiode that can be connected to Channel 1 and Channel 2. The photodiode anodes are connected to the PD1-2 and PD3-4 input pins; the photodiode cathodes are connected to the cathode pin, PDC. The anodes are assigned in two different configurations depending on the settings of Register 0x14 (see Figure 22 and Figure 23).

Register 0x14, PD1 to PD4 Input Configurations

Figure 22 shows the configuration where each of the PD inputs is connected to two channels. This configuration is the high dynamic range mode used for large photodiode currents. Figure 23 shows the configuration where each of the inputs to the device is connected to a single channel. This mode allows the user to maximize SNR for situations where lower photodiode currents are expected.

A switch sets which photodiode group is connected during Time Slot A and Time Slot B. See Table 17 for the time slot switch registers. It is important to leave any unused inputs floating for proper operation of the devices. The photodiode inputs are current inputs and, as such, these pins are also considered to be voltage outputs. Tying these inputs to a voltage may saturate the analog block.

Note that the ADPD106 only includes the options shown for the PD1-2 input pin shown in Figure 22 and Figure 23.

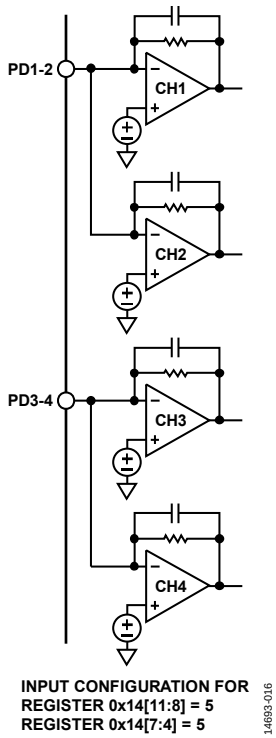

Figure 22. PD1 to PD4 Connection

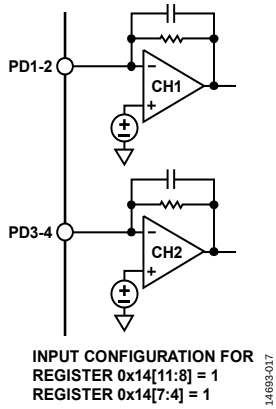

Figure 23. Current Summation—Two Photodiodes Summed into One Current

Table 17. Time Slot Switch (Register 0x14)

Address	Bits	Name	Description
0x14	[11:8]	SLOTB_PD_SEL	Selects connection of photodiode for Time Slot B as shown in Figure 22 and Figure 23. 0x0: inputs are floating in Time Slot B. 0x1: PD1-2 is connected to Channel 1; PD3-4 is connected to Channel 2 during Time Slot B. 0x5: PD1-2 is connected to Channel 1 and Channel 2; PD3-4 is connected to Channel 3 and Channel 4 during Time Slot B. Other: reserved.
	[7:4]	SLOTA_PD_SEL	Selects connection of photodiode for Time Slot A as shown in Figure 22 and Figure 23. 0x0: inputs are floating in Time Slot A. 0x1: PD1-2 is connected to Channel 1; PD3-4 is connected to Channel 2 during Time Slot A. 0x5: PD1-2 is connected to Channel 1 and Channel 2; PD3-4 is connected to Channel 3 and Channel 4 during Time Slot A. Other: reserved.

ADJUSTABLE SAMPLING FREQUENCY

Register 0x12 controls the sampling frequency setting of the ADPD105/ADPD106/ADPD107 and Register 0x4B, Bits[5:0] further tunes this clock for greater accuracy. The sampling frequency is governed by an internal 32 kHz sample rate clock that also drives the trans-ition of the internal state machine. The maximum sampling frequencies for some sample conditions are listed in Table 3. The maximum sample frequency for all conditions is determined by the following equation:

$$f_{SAMPLE,\ MAX} = 1/(t_A + t_1 + t_B + t_2 + t_{SLEEP,\ MIN})$$

where $t_{SLEEP,\ MIN}$ is the minimum sleep time required between samples.

If a given time slot is not in use, elements from that time slot do not factor into the calculation. For example, if Time Slot A is not in use, t_A and t_1 do not add to the sampling period and the new maximum sampling frequency is calculated as follows:

$$f_{SAMPLE,\ MAX} = 1/(t_B + t_2 + t_{SLEEP,\ MIN})$$

See the Dual Time Slot Operation section for the definitions of t_A, t_1, t_B, and t_2.

External Sync for Sampling

The ADPD105/ADPD106/ADPD107 provide an option to use an external sync signal to trigger the sampling periods. This external sample sync signal can be provided either on the GPIO0 pin or the GPIO1 pin. This functionality is controlled by Register 0x4F, Bits[3:2]. When enabled, a rising edge on the selected input specifies when the next sample cycle occurs. When triggered, there is a delay of one to two internal sampling clock (32 kHz) cycles, and then the normal start-up sequence occurs. This sequence is the same as when the normal sample timer providesthe trigger. To enable the external sync signal feature, use the following procedure:

1. Write 0x1 to Register 0x10 to enter program mode.
2. Write the appropriate value to Register 0x4F, Bits[3:2] to select whether the GPIO0 pin or the GPIO1 pin specifies when the next sample cycle occurs. Also, enable the appropriate input buffer using Register 0x4F, Bit 1, for the GPIO0 pin, or Register 0x4F, Bit 5, for the GPIO1 pin.
3. Write 0x4000 to Register 0x38.
4. Write 0x2 to Register 0x10 to start the sampling operations.
5. Apply the external sync signal on the selected pin at the desired rate; sampling occurs at that rate. As with normal sampling operations, read the data using the FIFO or the data registers.

The maximum frequency constraints also apply in this case.

Providing an External 32kHz Clock

The ADPD105/ADPD106/ADPD107 have an option for the user to provide an external 32 kHz clock to the devices for system synchronization or for situations where a clock with better accuracy than the internal 32 kHz clock is required. The external 32 kHz clock is provided on the GPIO1 pin. To enable the 32 kHz external clock, use the following procedure at startup:

1. Drive the GPIO1 pin to a valid logic level or with the desired 32 kHz clock prior to enabling the GPIO1 pin as an input. Do not leave the pin floating prior to enabling it.
2. Write 01 to Register 0x4F, Bits[6:5] to enable the GPIO1 pin as an input.
3. Write 10 to Register 0x4B, Bits[8:7] to configure the devices to use an external 32 kHz clock. This setting disables the internal 32 kHz clock and enables the external 32 kHz clock.
4. Write 0x1 to Register 0x10 to enter program mode.
5. Write additional control registers in any order while the devices are in program mode to configure the devices as required.
6. Write 0x2 to Register 0x10 to start the normal sampling operation.

STATE MACHINE OPERATION

During each time slot, the ADPD105/ADPD106/ADPD107 operate according to a state machine. The state machine operates in the following sequence, shown in Figure 24.

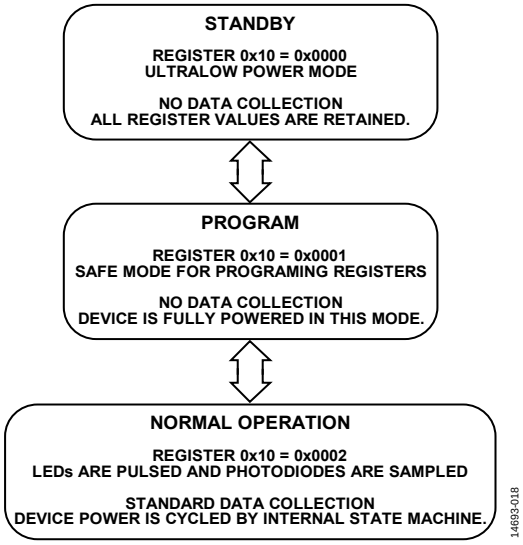

Figure 24. State Machine Operation Flowchart

The ADPD105/ADPD106/ADPD107 operate in one of three modes: standby, program, and normal sampling mode.

Standby mode is a power saving mode in which no data collection occurs. All register values are retained in this mode. To place the devices in standby mode, write 0x0 to Register 0x10, Bits[1:0]. The devices power up in standby mode.

Program mode is used for programming registers. Always cycle the ADPD105/ADPD106/ADPD107 through program mode when writing registers or changing modes. Because no power cycling occurs in this mode, the devices may consume higher current in program mode than in normal operation. To place the devices in program mode, write 0x1 to Register 0x10, Bits[1:0].

In normal operation, the ADPD105/ADPD106/ADPD107 pulse light and collect data. Power consumption in this mode depends on the pulse count and data rate. To place the devices in normal sampling mode, write 0x2 to Register 0x10, Bits[1:0].

NORMAL MODE OPERATION AND DATA FLOW

In normal mode, the ADPD105/ADPD106/ADPD107 follow a specific pattern set up by the state machine. This pattern is shown in the corresponding data flow in Figure 25. The pattern is as follows:

1. LED pulse and sample. The ADPD105/ADPD106/ADPD107 pulse external LEDs. The response of a photodiode or photodiodes to the reflected light is measured by the ADPD105/ADPD106/ADPD107. Each data sample is constructed from the sum of n individual pulses, where n is user configurable between 1 and 255.
2. Intersample averaging. If desired, the logic can average n samples, from 2 to 128 in powers of 2, to produce output data. New output data is saved to the output registers every N samples.
3. Data read. The host processor reads the converted results from the data register or the FIFO.
4. Repeat. The sequence has a few different loops that enable different types of averaging while keeping both time slots close in time relative to each other.

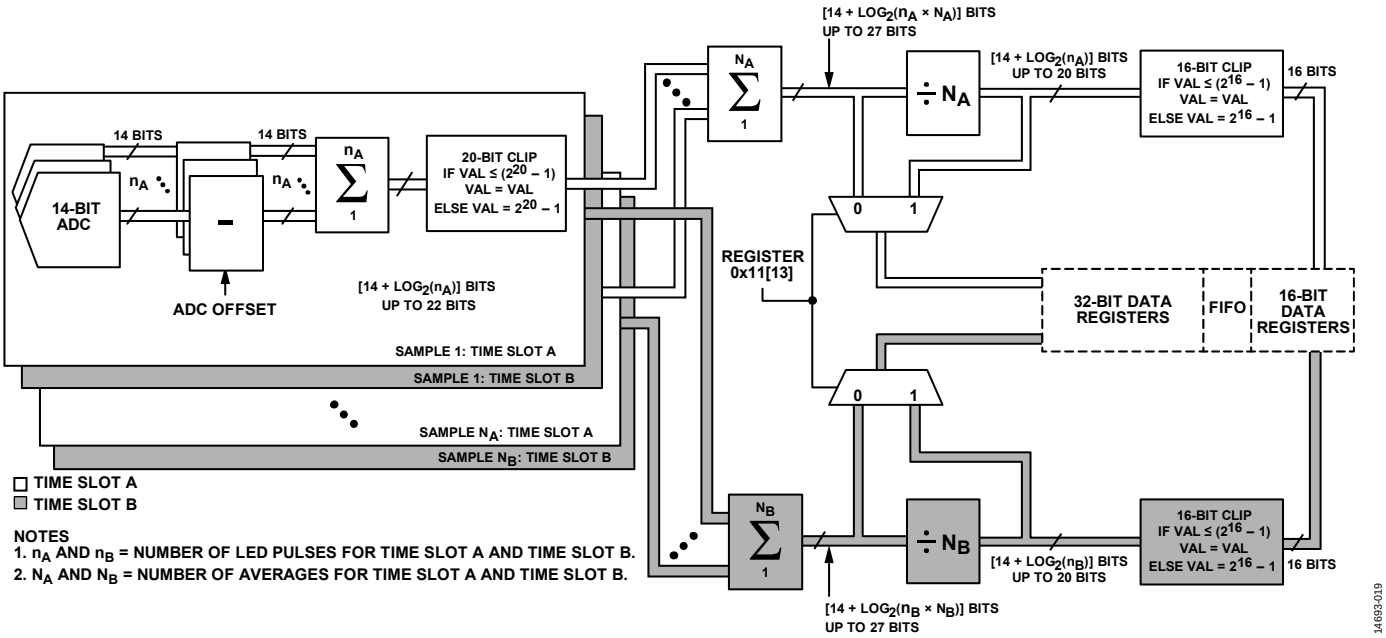

Figure 25. ADPD105/ADPD106/ADPD107 Datapath

LED Pulse and Sample

At each sampling period, the selected LED driver drives a series of LED pulses, as shown in Figure 26. The magnitude, duration, and number of pulses are programmable over the I²C interface. Each LED pulse coincides with a sensing period so that the sensed value represents the total charge acquired on the photodiode in response to only the corresponding LED pulse. Charge, such as ambient light, that does not correspond to the LED pulse is rejected.

After each LED pulse, the photodiode output relating the pulsed LED signal is sampled and converted to a digital value by the 14-bit ADC. Each subsequent conversion within a sampling period is summed with the previous result. Up to 255 pulse values from the ADC can be summed in an individual sampling period. There is a 20-bit maximum range for each sampling period.

Averaging

The ADPD105/ADPD106/ADPD107 offer sample accumulation and averaging functionality to increase signal resolution.

Within a sampling period, the AFE can sum up to 256 sequential pulses. As shown in Figure 25, samples acquired by the AFE are clipped to 20 bits at the output of the AFE. Additional resolution, up to 27 bits, can be achieved by averaging between sampling periods. This accumulated data of N samples is stored as 27-bit values and can be read out directly by using the 32-bit output registers or the 32-bit FIFO configuration.

When using the averaging feature set up by Register 0x15, subsequent pulses can be averaged by powers of 2. The user can select from 2, 4, 8 … up to 128 samples to be averaged. Pulse data is still acquired by the AFE at the sampling frequency, f_{SAMPLE} (Register 0x12), but new data is written to the registers at the rate of f_{SAMPLE}/N every N^{th} sample. This new data consists of the sum of the previous N samples. The full 32-bit sum is stored in the 32-bit registers. However, before sending this data to the FIFO, a divide by N operation occurs. This divide operation maintains bit depth to prevent clipping on the FIFO.

Use this between sample averaging to lower the noise while maintaining 16-bit resolution. If the pulse count registers are kept to 8 or less, the 16-bit width is never exceeded. Therefore, when using Register 0x15 to average subsequent pulses, many pulses can be accumulated without exceeding the 16-bit word width. This averaging can reduce the number of FIFO reads required by the host processor.

Data Read

The host processor reads output data from the ADPD105/ADPD107 via the I²C protocol on the ADPD105 or the SPI port on the ADPD107. Data is read from the data registers or from the FIFO. New output data is made available every N samples, where N is the user configured averaging factor. The averaging factors for Time Slot A and Time Slot B are configurable independently of each other. If they are the same, both time slots can be configured to save data to the FIFO. If the two averaging factors are different, only one time slot can save data to the FIFO; data from the other time slot can be read from the output registers.

The data read operations are described in more detail in the Reading Data section.

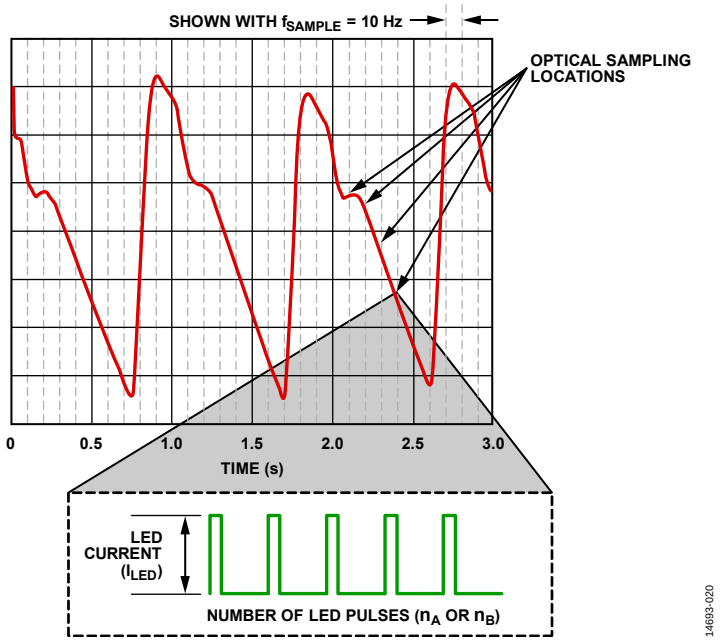

Figure 26. Example of a Photoplethysmography (PPG) Signal Sampled at a Data Rate of 10 Hz Using Five Pulses per Sample

AFE OPERATION

The timing within each pulse burst is important for optimizing the operation of the ADPD105/ADPD106/ADPD107. Figure 27 shows the timing waveforms for a single time slot as an LED pulse response propagates through the analog block of the AFE. The first graph, shown in green, shows the ideal LED pulsed output. The filtered LED response, shown in blue, shows the output of the analog integrator. The third graph, shown in orange, illustrates an optimally placed integration window. When programmed to the optimized value, the full signal of the filtered LED response can be integrated. The AFE integration window is then applied to the output of the band-pass filter (BPF) and the result is sent to the ADC and summed for N pulses. If the AFE window is not correctly sized or located, all of the receive signal is not properly reported and system performance is not optimal; therefore, it is important to verify proper AFE position for every new hardware design or the LED width.

AFE INTEGRATION OFFSET ADJUSTMENT

The AFE integration width must be equal or larger than the LED width. As AFE width increases, the output noise increases and the ability to suppress high frequency content from the environment decreases. It is therefore desirable to keep the AFE integration width small. However, if the AFE width is too small, the LED signal is attenuated. With most hardware selections, the AFE width produces the optimal SNR at 1 µs more than the LED width. After setting LED width, LED offset, and AFE width, the ADC offset can then be optimized. The AFE offset must be manually set such that the falling edge of the first segment of the integration window matches the zero crossing of the filtered LED response.

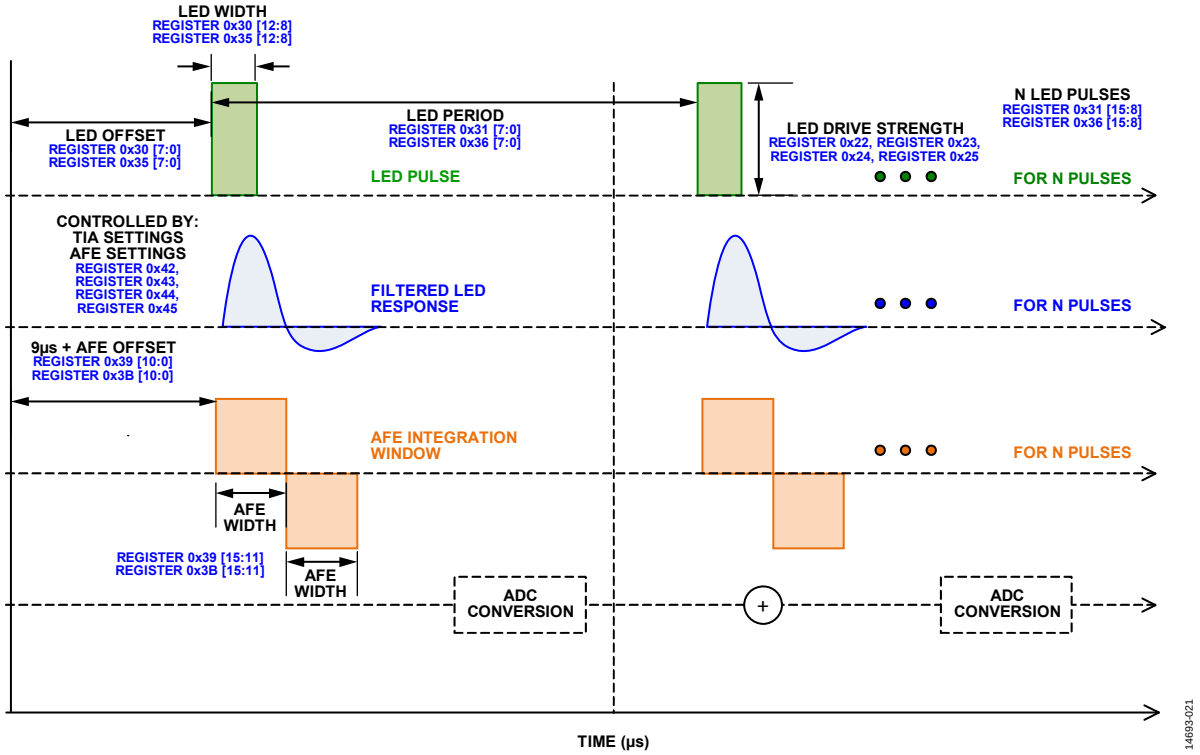

Figure 27. AFE Operation Diagram

AFE Integration Offset Starting Point

The starting point of this offset, as expressed in microseconds, is set such that the falling edge of the integration window aligns with the falling edge of the LED.

LED_FALLING_EDGE = SLOTx_LED_OFFSET + SLOTx_LED_WIDTH

and,

AFE_INTEGRATION_FALLING_EDGE = 9 + SLOTx_AFE_OFFSET + SLOTx_AFE_WIDTH

If both falling edges are set equal to each other, solve for SLOTx_AFE_OFFSET to obtain the following equation:

AFE_OFFSET_STARTING_POINT = SLOTx_LED_OFFSET + SLOTx_LED_WIDTH – 9 – SLOTx_AFE_WIDTH

Setting the AFE offset to any point in time earlier than the starting point is equivalent to setting the integration in the future; the AFE cannot integrate the result from an LED pulse that has not yet occurred. As a result, a SLOTx_AFE_OFFSET value less than the AFE_OFFSET_STARTING_POINT value is an erroneous setting. Such a result may indicate that current in the TIA is operating in the reverse direction from intended, where the LED pulse is causing the current to leave the TIA rather than enter it.

Because, for most setups, the SLOTx_AFE_WIDTH is 1 µs wider than the SLOTx_LED_WIDTH, the AFE_OFFSET_STARTING_POINT value is typically 10 µs less than the SLOTx_LED_OFFSET value. Any value less than SLOTx_LED_OFFSET – 10 is erroneous. The optimal AFE offset is some time after the AFE_OFFSET_STARTING_POINT value. The band-pass filter response, LED response, and photodiode response each add some delay. In general, the component choice, board layout, SLOTx_LED_OFFSET, and SLOTx_LED_WIDTH are the variables that can change the SLOTx_AFE_OFFSET value. After a specific design is set, the SLOTx_AFE_OFFSET value can be locked down and does not need to be optimized further.

Sweeping the AFE Position

The AFE offsets for Time Slot A and Time Slot B are controlled by Bits[10:0] of Register 0x39 and Register 0x3B, respectively. Each LSB represents one cycle of the 32 MHz clock, or 31.25 ns. The register can be thought of as 2^{11-1} of these 31.25 ns steps, or it can be broken into an AFE coarse setting using Bits[10:5] to represent 1 µs steps and Bits[4:0] to represent 31.25 ns steps. Sweeping the AFE position from the starting point to find a local maximum is the recommended way to optimize the AFE offset. The setup for this test is to allow the LED light to fall on the photodiode in a static way. This test is typically done with a reflecting surface at a fixed distance. The AFE position can then be swept to look for changes in the output level. When adjusting the AFE position, it is important to sweep the position using the 31.25 ns steps. Typically, a local maximum is found within 2 µs of the starting point for most systems. Figure 28 shows an example of an AFE sweep, where 0 on the x-axis represents the AFE starting point defined previously. Each data point in Figure 28 corresponds to one 31.25 ns step of the SLOTx_AFE_OFFSET. The optimal location for SLOTx_AFE_OFFSET in this example is 0.687 µs from the AFE starting point.

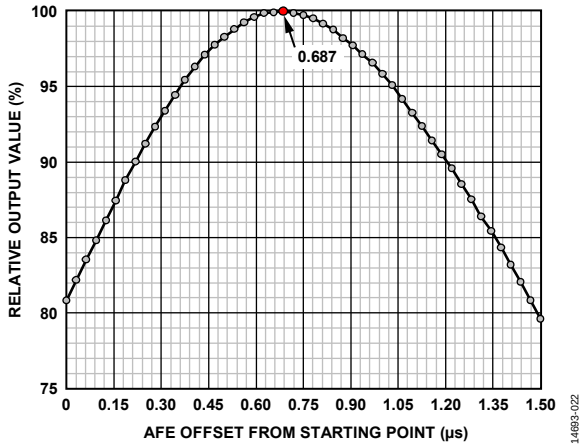

Figure 28. AFE Sweep Example

Table 18 lists some typical LED and AFE values after optimization. In general, it is not recommended to use the SLOTx_AFE_OFFSET numbers in Table 18 without first verifying them against the AFE sweep method. Repeat this method for every new LED width and with every new set of hardware made with the ADPD105/ADPD107. For maximum accuracy, it is recommended that the 32 MHz clock be calibrated prior to sweeping the AFE.

Table 18. AFE Window Settings

LED Register 0x30 or Register 0x35	AFE Register 0x39 or Register 0x3B	Comment
0x0219	0x1A08	2 µs LED pulse, 3 µs AFE width, 25 µs LED delay
0x0319	0x21FE	3 µs LED pulse, 4 µs AFE width, 25 µs LED delay

I²C SERIAL INTERFACE

The ADPD105 supports an I²C serial interface via the SDA (data) and SCL (clock) pins. All internal registers are accessed through the I²C interface. The ADPD105 is an I²C only device and does not support an SPI.

The ADPD105 conforms to the *UM10204 I²C-Bus Specification and User Manual*, Rev. 05—9 October 2012, available from NXP Semiconductors. It supports a fast mode (400 kbps) data transfer. Register read and write are supported, as shown in Figure 29. Figure 3 shows the timing diagram for the I²C interface.

Slave Address

The default 7-bit I²C slave address for the device is 0x64, followed by the R/$\overline{W}$ bit. For a write, the default I²C slave address is 0xC8; for a read, the default I²C address is 0xC9. The slave address is configurable by writing to Register 0x09, Bits[7:1]. When multiple ADPD105 devices are on the same bus lines, the GPIO0 and GPIO1 pins can be used to select specific devices for the address change. Register 0x0D can be used to select a key to enable address changes in specific devices. Use the following procedure to change the slave address when multiple ADPD105 devices are connected to the same I²C bus lines:

1. Using Register 0x4F, enable the input buffer of the GPIO1 pin, the GPIO0 pin, or both, depending on the key being used.
2. For the device identified as requiring an address change, set the GPIO0 and/or GPIO1 pins high or low to match the key being used.
3. Write the SLAVE_ADDRESS_KEY bits using Register 0x0D, Bits[15:0] to match the desired function. The allowed keys are shown in Table 33.
4. Write the desired SLAVE_ADDRESS bits using Register 0x09, Bits[7:1]. While writing to Register 0x09, Bits[7:1], write 0xAD to Register 0x09, Bit[15:8]. Register 0x09 must be written to immediately after writing to Register 0x0D.
5. Repeat Step 1 to Step 4 for all the devices that need SLAVE_ADDRESS changed.
6. Set the GPIO0 and GPIO1 pins as desired for normal operation using the new SLAVE_ADDRESS for each device.

I²C Write and Read Operations

Figure 29 illustrates the ADPD105 I²C write and read operations. Single-word and multiword read operations are supported. For a single register read, the host sends a no acknowledge (NACK) after the second data byte is read and a new register address is needed for each access.

For multiword operations, each pair of data bytes is followed by an acknowledge from the host until the last byte of the last word is read. The host indicates the last read word by sending a no acknowledge. When reading from the FIFO (Register 0x60), the data is automatically advanced to the next word in the FIFO and the space is freed. When reading from other registers, the register address is automatically advanced to the next register, except at Register 0x5F or Register 0x7F, where the address does not increment. This autoincrementing allows lower overhead reading of sequential registers.

All register writes are single word only and require 16 bits (one word) of data.

The software reset (Register 0x0F, Bit 0) returns an acknowledge. The device then returns to standby mode with all registers in the default state.

Table 19. Definition of I²C Terminology

Term	Description
SCL	Serial clock.
SDA	Serial address and data.
Master	The master is the device that initiates a transfer, generates clock signals, and terminates a transfer.
Slave	The slave is the device addressed by a master. The ADPD105 operates as a slave device.
Start (S)	A high to low transition on the SDA line while SCL is high; all transactions begin with a start condition.
Start (Sr)	Repeated start condition.
Stop (P)	A low to high transition on the SDA line while SCL is high. A stop condition terminates all transactions.
ACK	During the acknowledge or no acknowledge clock pulse, the SDA line is pulled low and remains low.
NACK	During the acknowledge or no acknowledge clock pulse, the SDA line remains high.
Slave Address	After a start (S), a 7-bit slave address is sent, which is followed by a data direction bit (read or write).
Read (R)	A 1 indicates a request for data.
Write (W)	A 0 indicates a transmission.

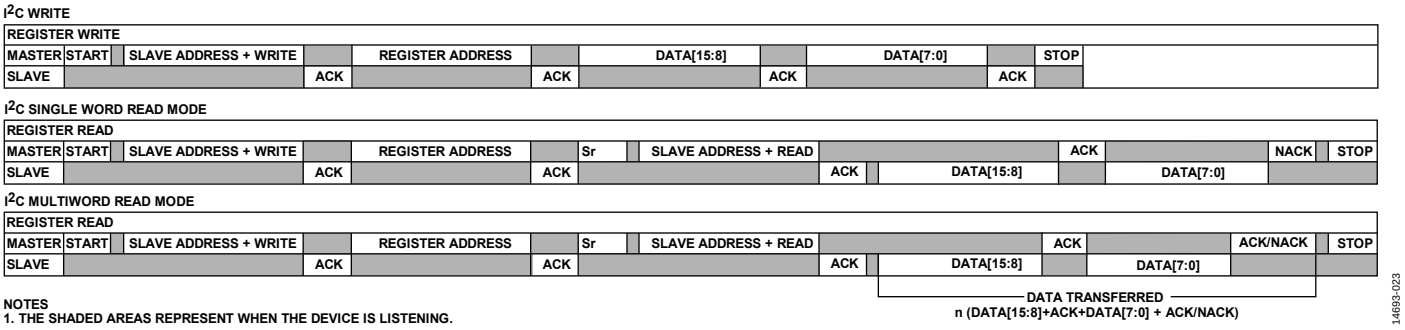

Figure 29. I²C Write and Read Operations

SPI PORT

The ADPD106 and ADPD107 are SPI only devices. They do not support the I²C interface. The SPI port uses a 4-wire interface, consisting of the $\overline{CS}$, MOSI, MISO, and SCLK signals, and it is always a slave port. The $\overline{CS}$ signal goes low at the beginning of a transaction and high at the end of a transaction. The SCLK signal latches MOSI on a low to high transition. The MISO data is shifted out of the device on the falling edge of SCLK and must be clocked into a receiving device, such as a microcontroller, on the SCLK rising edge. The MOSI signal carries the serial input data, and the MISO signal carries the serial output data. The MISO signal remains three state until a read operation is requested, which allows other SPI-compatible peripherals to share the same MISO line. All SPI transactions have the same basic format shown in Table 20. A timing diagram is shown in Figure 4. Write all data MSB first.

Table 20. Generic Control Word Sequence

Byte 0	Byte 1	Byte 2	Subsequent Bytes
Address[6:0], W/$\overline{R}$	Data[15:8]	Data[7:0]	Data[15:8], Data[7:0]

The first byte written in a SPI transaction is a 7-bit address, which is the location of the address being accessed, followed by the W/$\overline{R}$ bit. This bit determines whether the communication is a write (Logic Level 1) or a read (Logic Level 0). This format is shown in Table 21.

Table 21. SPI Address and Write/$\overline{R}$ Byte Format

Bit 0	Bit 1	Bit 2	Bit 3	Bit 4	Bit 5	Bit 6	Bit 7
A6	A5	A4	A3	A2	A1	A0	W/$\overline{R}$

The format for the SPI communications slave port is commonly known as SPI Mode 3, where clock polarity (CPOL) = 1 and clock phase (CPHA) = 1 (see Figure 30). The base value of the clock is 1. Data is captured on the rising edge of the clock, and data is propagated on the falling edge.

The maximum read and write speed for the SPI slave port is 10 MHz.

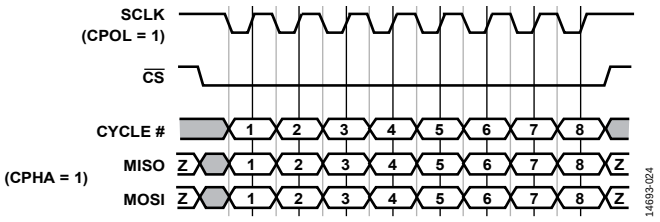

Figure 30. Clock Polarity and Phase for the SPI Slave Port (CPOL = 1, CPHA = 1)

A sample timing diagram for a multiple word SPI write operation to a register is shown in Figure 31. A sample timing diagram of a single-word SPI read operation is shown in Figure 32. The MISO pin transitions from being three-state to being driven following the reception of a valid $\overline{R}$ bit. In this example, Byte 0 contains the address and the W/$\overline{R}$ bit, and subsequent bytes carry the data. A sample timing diagram of a multiple word SPI read operation is shown in Figure 33. In Figure 31 to Figure 33, rising edges on SCLK are indicated with an arrow, signifying that the data lines are sampled on the rising edge.

When performing multiple word reads or writes, the data address is automatically incremented to the next consecutive address for subsequent transactions except for Address 0x5F, Address 0x60 (FIFO), and Address 0x7F.

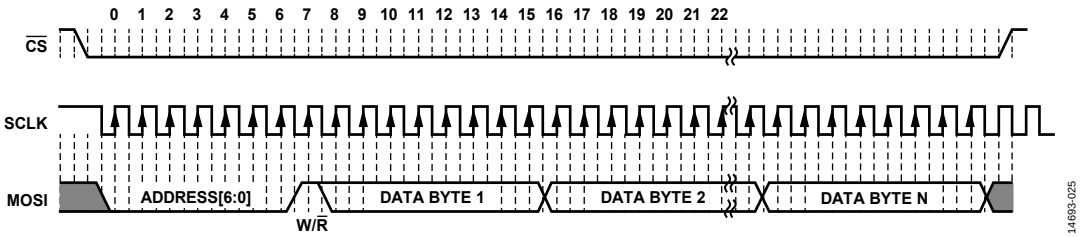

Figure 31. SPI Slave Write Clocking (Burst Write Mode, N Bytes)

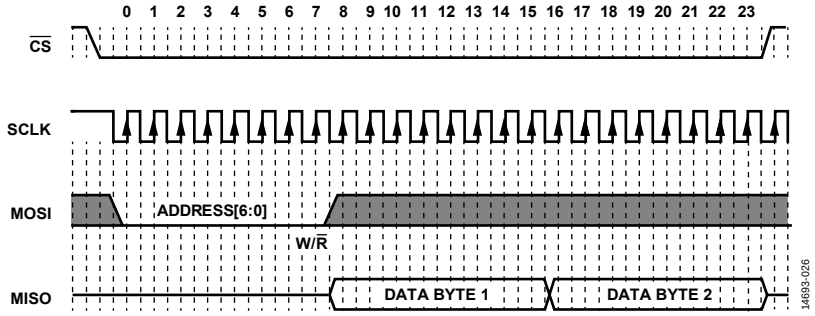

Figure 32. SPI Slave Read Clocking (Single-Word Mode, Two Bytes)

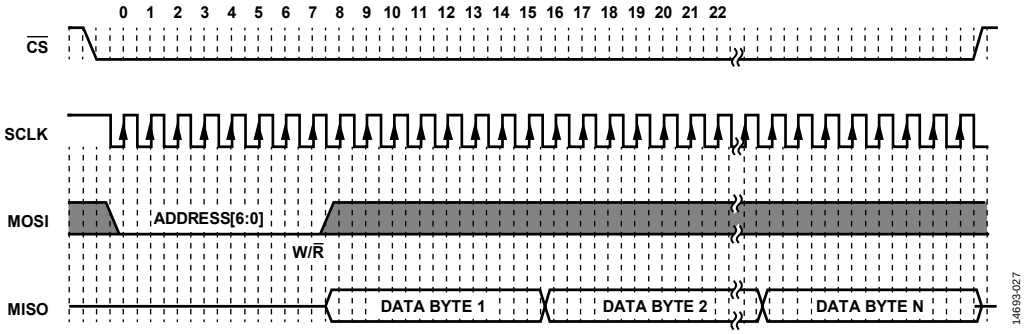

Figure 33. SPI Slave Read Clocking (Burst Read Mode, N Bytes)

TYPICAL CONNECTION DIAGRAM

Figure 34 shows a typical circuit used for wrist-based heart rate measurement with the ADPD105 WLCSP using a green LED. The 1.8 V I²C communication lines, SCL and SDA, along with the GPIO0 and GPIO1 lines, connect to a system microprocessor or sensor hub. The I²C signals can have pull-up resistors connected to a 1.8 V or a 3.3 V power supply. The GPIO0 and GPIO1 signals are only compatible with a 1.8 V supply and may need a level translator. The circuit shown in Figure 34 is identical for the ADPD107, except the I²C interface is replaced by an SPI. There are multiple ways to connect photodiodes to the 8-channel ADPD105 LFCSP, as shown in Table 22 and Figure 37. The photodiode anodes are connected to the PD1 to PD8 input pins and the photodiode cathodes are connected to the cathode pin, PDC.

Provide the 1.8 V supply, V_{DD}, to AVDD and DVDD. The LED supply uses a standard regulator circuit according to the peak current requirements specified in Table 3 and calculated in the LED Driver Pins and LED Supply Voltage section.

For best noise performance, connect AGND, DGND, and LGND together at a large conductive surface, such as a ground plane, a ground pour, or a large ground trace.

The number of photodiodes or LEDs used varies depending on the application as well as the dynamic range and SNR required. For example, in an application where a single, large photodiode is used, the dynamic range can be increased by splitting the current between multiple inputs. This is achieved by connecting the anode of the photodiode to multiple channels so that the current can be split evenly among the number of channels connected, effectively increasing the dynamic range over a single channel configuration. Alternatively, in situations where the photodiode is small or the signal is greatly attenuated, SNR can be maximized by connecting the anode of the photodiode to just a single channel. It is important to leave the unused input floating for proper device operation.

Figure 35 and Figure 36 show the recommended connection diagram and printed circuit board (PCB) layout for the ADPD105 and ADPD107, respectively. The current input pins, PD1-2 and PD3-4, have a typical voltage of 1.3 V during the sampling period. During the sleep period, these pins are connected to the cathode pin. The cathode and anode voltages are listed in Table 3.

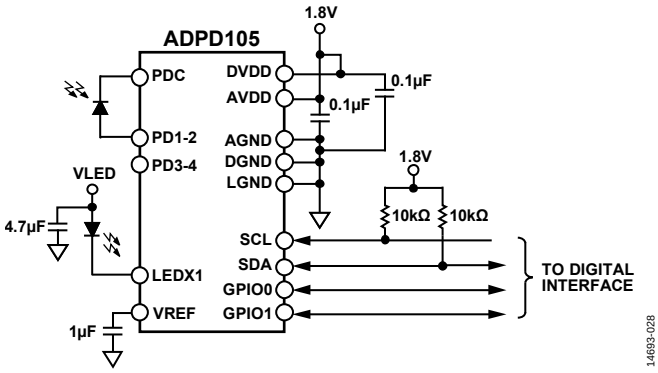

Figure 34. Typical Wrist-Based HRM Measurement

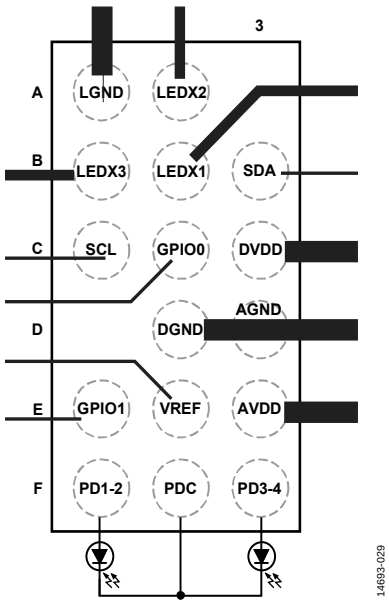

Figure 35. ADPD105 Connection and PCB Layout Diagram (Top View)

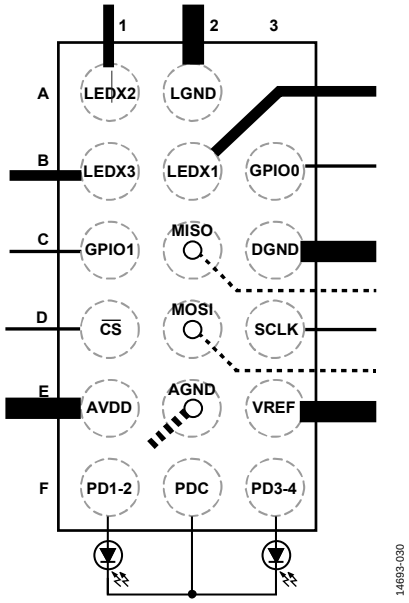

Figure 36. ADPD107 Connection and PCB Layout Diagram, Dashed Line Traces From Blind Vias (Top View)

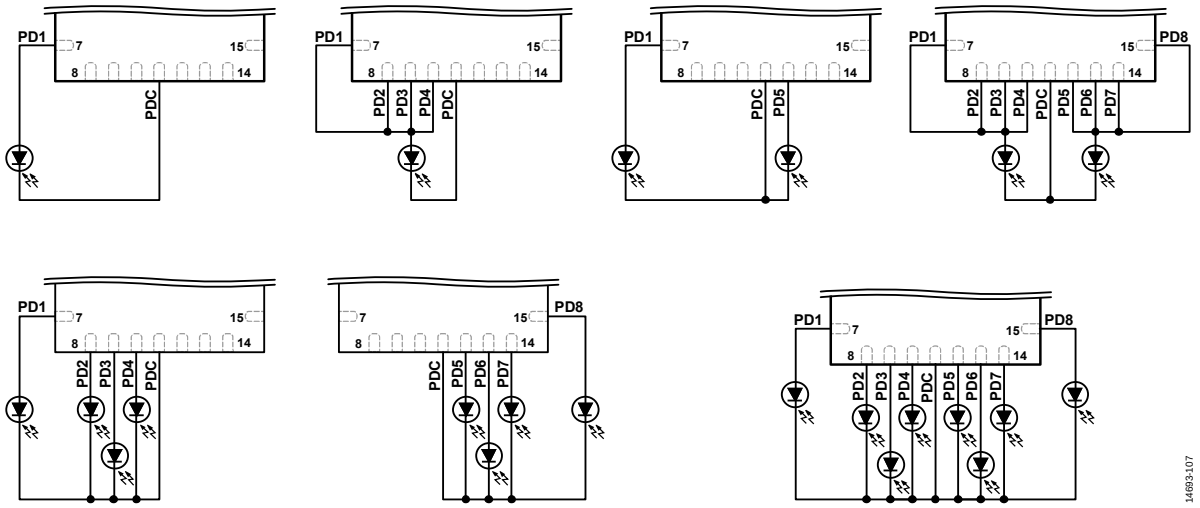

Figure 37. Photodiode Configuration Options for the ADPD105 LFCSP

Table 22. Typical Photodiode Anode to Input Channel Connections for the ADPD105 LFCSP[1, 2]

	Input Channel							
Photodiode Anode Configuration	**PD1**	**PD2**	**PD3**	**PD4**	**PD5**	**PD6**	**PD7**	**PD8**
Single Photodiode (PD1)	D1	NC	NC	NC	NC	NC	NC	NC
	NC	NC	NC	NC	D1	NC	NC	NC
	D1	D1	D1	D1	NC	NC	NC	NC
	NC	NC	NC	NC	D1	D1	D1	D1
Two Photodiodes (PD1, PD2)	D1	NC	NC	NC	D2	NC	NC	NC
	D1	D1	D1	D1	D2	D2	D2	D2
Four Photodiodes (PD1 to PD4)	D1	D2	D3	D4	NC	NC	NC	NC
	NC	NC	NC	NC	D1	D2	D3	D4
Eight Photodiodes (PD1 to PD8)	D1	D2	D3	D4	D5	D6	D7	D8

[1] Dx refers to the diode connected to the specified channel.
[2] NC means do not connect under the conditions provided in Table 21. Leave all unused inputs floating.

LED DRIVER PINS AND LED SUPPLY VOLTAGE

The LEDX1, LEDX2, and LEDX3 pins have an absolute maximum voltage rating of 3.6 V. Any voltage exposure over this rating affects the reliability of the device operation and, in certain circumstances, causes the device to cease proper operation. The voltage of the LEDx pins must not be confused with the supply voltages for the LED themselves (V_{LEDx}). V_{LEDx} is the voltage applied to the anode of the external LED, whereas the LEDXx pin is the input of the internal current driver, and the pins are connected to the cathode of the external LED.

LED DRIVER OPERATION

The LED driver for the ADPD105/ADPD106/ADPD107 is a current sink. The compliance voltage, measured at the driver pin with respect to ground, required to maintain the programmed LED current level is a function of the current required. Figure 15 shows the typical compliance voltages required at the various coarse LED settings. Figure 38 shows the basic schematic of how the ADPD105/ADPD106/ADPD107 connect to an LED through the LED driver. The Determining the Average Current and the Determining CVLED sections define the requirements for the bypass capacitor (C_{VLED}) and the supply voltages of the LEDs (V_{LEDx}).

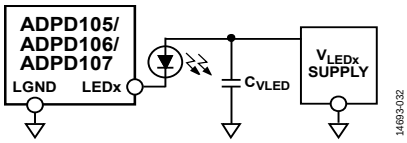

Figure 38. V_{LEDx} Supply Schematic

DETERMINING THE AVERAGE CURRENT

The ADPD105/ADPD106/ADPD107 drive an LED in a series of short pulses. Figure 39 shows the typical ADPD105/ADPD106/ADPD107 configuration of a pulse burst sequence.

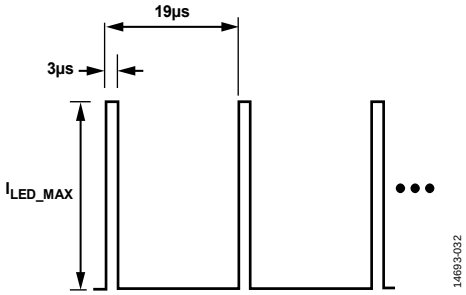

Figure 39. Typical LED Pulse Burst Sequence Configuration

In this example, the LED pulse width, t_{LED_PULSE}, is 3 µs, and the LED pulse period, t_{LED_PERIOD}, is 19 µs. The LED being driven is a pair of green LEDs driven to a 250 mA peak. The goal of C_{VLED} is to buffer the LED between individual pulses. In the worst case scenario, where the pulse train shown in Figure 39 is a continuous sequence of short pulses, the V_{LEDx} supply must supply the average current. Therefore, calculate $I_{LED_AVERAGE}$ as follows:

$$I_{LED_AVERAGE} = (t_{LED_PULSE}/t_{LED_PERIOD}) \times I_{LED_MAX} \quad (1)$$

where:

$I_{LED_AVERAGE}$ is the average current needed from the V_{LEDx} supply during the pulse period, and it is also the V_{LEDx} supply current rating.

I_{LED_MAX} is the peak current setting of the LED.

For the numbers shown in Equation 1, $I_{LED_AVERAGE} = 3/19 \times I_{LED_MAX}$. For typical LED timing, the average V_{LEDx} supply current is 3/19 × 250 mA = 39.4 mA, indicating that the V_{LEDx} supply must support a dc current of 40 mA.

DETERMINING C_{VLED}

To determine the C_{VLED} capacitor value, determine the maximum forward-biased voltage, $V_{FB_LED_MAX}$, of the LED in operation. The LED current, I_{LED_MAX}, converts to $V_{FB_LED_MAX}$ as shown in Figure 40. In this example, 250 mA of current through two green LEDs in parallel yields $V_{FB_LED_MAX}$ = 3.95 V. Any series resistance in the LED path must also be included in this voltage. When designing the LED path, keep in mind that small resistances can add up to large voltage drops due to the LED peak current being very large. In addition, these resistances can be unnecessary constraints on the V_{LEDx} supply.

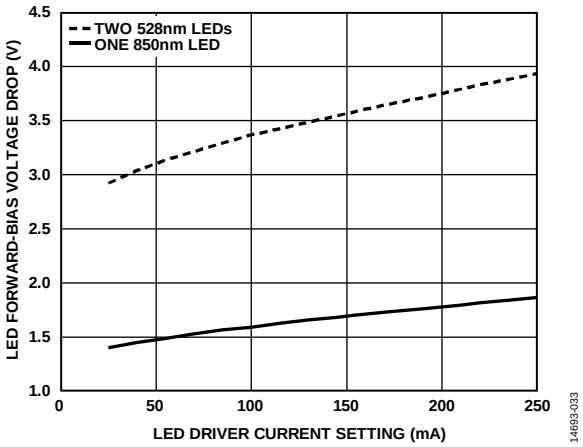

Figure 40. Example of the Average LED Forward-Bias Voltage Drop as a Function of the Driver Current

To correctly size the C_{VLED} capacitor, do not deplete it during the pulse of the LED to the point where the voltage on the capacitor is less than the forward bias on the LED. To calculate the minimum value for the V_{LEDx} bypass capacitor, use the following equation:

$$C_{VLED} = \frac{t_{LED_PULSE} \times I_{LED_MAX}}{V_{LED_MIN} - (V_{FB_LED_MAX} + 0.2)} \quad (2)$$

where:

t_{LED_PULSE} is the LED pulse width.

I_{LED_MAX} is the maximum forward-biased current on the LED used in operating the device.

V_{LED_MIN} is the lowest voltage from the VLEDx supply with no load.

$V_{FB_LED_MAX}$ is the maximum forward-biased voltage required on the LED to achieve I_{LED_MAX}.

The numerator of the C_{VLED} equation sets up the total discharge amount in coulombs from the bypass capacitor to satisfy a single programmed LED pulse of the maximum current. The denominator represents the difference between the lowest voltage from the V_{LEDx} supply and the LED required voltage. The LED required voltage is the voltage of the anode of the LED such that the 0.2 V compliance of the LED driver and the forward-biased voltage of the LED operating at the maximum current is satisfied. For a typical ADPD105/ADPD106/ADPD107 example, assume that the lowest value for the V_{LEDx} supply is 4.4 V, and that the peak current is 250 mA for two 528 nm LEDs in parallel. The minimum value for C_{VLED} is then equal to 3 µF.

$$C_{VLED} = (3 \times 10^{-6} \times 0.250)/(4.4 - (3.95 + 0.2)) = 3\ \mu F \quad (3)$$

As shown in the Equation 3, as the minimum supply voltage drops close to the maximum anode voltage, the demands on C_{VLED} become more stringent, forcing the capacitor value higher. It is important to insert the correct values into Equation 2, Equation 2, and Equation 3. For example, using an average value for V_{LED_MIN} instead of the worst case value for V_{LED_MIN} can cause a serious design deficiency, resulting in a C_{VLED} value that is too small and that causes insufficient optical power in the application. Therefore, adding a sufficient margin on C_{VLED} is strongly recommended. Add additional margin to C_{VLED} to account for derating of the capacitor value over voltage, bias, temperature, and other factors over the life of the component.

LED INDUCTANCE CONSIDERATIONS

The LED drivers (LEDXx) on the ADPD105/ADPD106/ADPD107 have configurable slew rate settings (Register 0x22, Bits[6:4], Register 0x23, Bits[6:4], and Register 0x24, Bits[6:4]). These slew rates are defined in Table 3. Even at the lowest setting, careful consideration must be taken in board design and layout. If a large series inductor, such as a long PCB trace, is placed between the LED cathode and one of the LEDXx pins, voltage spikes from the switched inductor can cause violations of absolute maximum and minimum voltages on the LEDXx pins during the slew portion of the LED pulse.

To verify that there are no voltage spikes on the LEDXx pins due to parasitic inductance, use an oscilloscope on the LEDXx pins to monitor the voltage during normal operation. Any positive spike >3.6 V may damage the devices.

In addition, a negative spike <−0.3 V may also damage the devices.

RECOMMENDED START-UP SEQUENCE

At power-up, the device is in standby mode (Register 0x10 = 0x0), as shown in Figure 24. The ADPD105/ADPD106/ADPD107 do not require a particular power-up sequence.

From standby mode, to begin measurement, initiate the ADPD105/ADPD106/ADPD107 as follows:

1. Set the CLK32K_EN bit (Register 0x4B, Bit 7) to start the sample clock (32 kHz clock). This clock controls the state machine. If this clock is off, the state machine is not able to transition as defined by Register 0x10.
2. Write 0x1 to Register 0x10 to force the device into program mode. Step 1 and Step 2 can be swapped, but the actual state transition does not occur until both steps occur.
3. Write additional control registers in any order while the device is in program mode to configure the devices as required.
4. Write 0x2 to Register 0x10 to start normal sampling operation.

To terminate normal operation, follow this sequence to place the ADPD105/ADPD106/ADPD107 in standby mode:

1. Write 0x1 to Register 0x10 to force the devices into program mode.
2. Write to the registers in any order while the devices are in program mode.
3. Write 0x00FF to Register 0x00 to clear all interrupts. If desired, clear the FIFO as well by writing 0x80FF to Register 0x00.
4. Write 0x0 to Register 0x10 to force the devices into standby mode.
5. Optionally, stop the 32 kHz clock by resetting the CLK32K_EN bit (Register 0x4B, Bit 7). Register 0x4B, Bit 7 = 0 is the only write that must be written when the device is in standby mode (Register 0x10 = 0x0). If 0 is written to this bit while in program mode or normal mode, the devices become unable to transition into any other mode, including standby mode, even if they are subsequently written to do so. As a result, the power consumption in what appears to be standby mode is greatly elevated. For this reason, and due to the very low current draw of the 32 kHz clock while in operation, it is recommended from an ease of use perspective to keep the 32 kHz clock running after it is turned on.

READING DATA

The ADPD105/ADPD106/ADPD107 provide multiple methods for accessing the sample data. Each time slot can be independently configured to provide data access using the FIFO or the data registers. Interrupt signaling is also available to simplify timely data access. The FIFO is available to loosen the system timing requirements for data accesses.

Reading Data Using the FIFO

The ADPD105/ADPD106/ADPD107 include a 128-byte FIFO memory buffer that can be configured to store data from either or both time slots. Register 0x11 selects the kind of data from each time slot to be written to the FIFO. Note that both time slots can be enabled to use the FIFO, but only if their output data rate is the same.

$$\text{Output data rate} = f_{SAMPLE}/N$$

where:
f_{SAMPLE} is the sampling frequency.
N is the averaging factor for each time slot (N_A for Time Slot A and N_B for Time Slot B). In other words, $N_A = N_B$ must be true to store data from both time slots in the FIFO.

Data packets are written to the FIFO at the output data rate. A data packet for the FIFO consists of a complete sample for each enabled time slot. Data for each photodiode channel can be stored as either 16 or 32 bits. Each time slot can store 2, 4, 8, or 16 bytes of data per sample, depending on the mode and data format. To ensure that data packets are intact, new data is only written to the FIFO if there is sufficient space for a complete packet. Any new data that arrives when there is not enough space is lost. The FIFO continues to store data when sufficient space exists. Always read FIFO data in complete packets to ensure that data packets remain intact.

The number of bytes currently stored in the FIFO is available in Register 0x00, Bits[15:8]. A dedicated FIFO interrupt is also available and automatically generates when a specified amount of data is written to the FIFO.

Interrupt-Based Method

To read data from the FIFO using an interrupt-based method, use the following procedure:

1. In program mode, set the configuration of the time slots as desired for operation.
2. Write Register 0x11 with the desired data format for each time slot.
3. Set FIFO_THRESH in Register 0x06, Bits[13:8] to the interrupt threshold. A recommended value for this is the number of 16-bit words in a data packet, minus 1. This causes an interrupt to generate when there is at least one complete packet in the FIFO.
4. Enable the FIFO interrupt by writing a 0 to the FIFO_INT_MASK in Register 0x01, Bit 8. Also, configure the interrupt pin (GPIO0) by writing the appropriate value to the bits in Register 0x02.

5. Enter normal operation mode by setting Register 0x10 to 0x2.
6. When an interrupt occurs
   a. There is no requirement to read the FIFO_SAMPLES bits, because the interrupt is generated only if there is one or more full packets. Optionally, the interrupt routine can check for the presence of more than one available packet by reading these bits.
   b. Read a complete packet using one or more multiword accesses using Register 0x60. Reading the FIFO automatically frees the space for new samples.

The FIFO interrupt automatically clears immediately upon reading any data from the FIFO and is set again only when the FIFO is written and the number of words is above the threshold.

Polling Method

To read data from the FIFO in a polling method, use the following procedure:

1. In program mode, set the configuration of the time slots as desired for operation.
2. Write Register 0x11 with the desired data format for each time slot.
3. Enter normal operation mode by setting Register 0x10 to 2.

Next, begin the polling operations.

1. Wait for the polling interval to expire.
2. Read the FIFO_SAMPLES bits (Register 0x00, Bits[15:8]).
3. If FIFO_SAMPLES ≥ the packet size, read a packet using the following steps:
   a. Read a complete packet using one or more multiword accesses via Register 0x60. Reading the FIFO automatically frees the space for new samples.
   b. Repeat Step 1.

When a mode change is required, or any other disruption to normal sampling is necessary, the FIFO must be cleared. Use the following procedure to clear the state and empty the FIFO:

1. Enter program mode by setting Register 0x10 to 0x1.
2. Write 1 to Register 0x00, Bit 15.

Reading Data from Registers Using Interrupts

The latest sample data is always available in the data registers and is updated simultaneously at the end of each time slot. The data value for each photodiode channel is available as a 16-bit value in Register 0x64 through Register 0x67 for Time Slot A, and Register 0x68 through Register 0x6B for Time Slot B. If allowed to reach their maximum value, Register 0x64 through Register 0x6B clip. If Register 0x64 through Register 0x6B saturate, the unsaturated (up to 27 bits) values for each channel are available in Register 0x70 through Register 0x77 for Time Slot A and Register 0x78 through Register 0x7F for Time Slot B. Sample interrupts are available to indicate when the registers are updated and can be read. To use the interrupt for a given time slot, use the following procedure:

1. Enable the sample interrupt by writing a 0 to the appropriate bit in Register 0x01. To enable the interrupt for Time Slot A, write 0 to Bit 5. To enable the interrupt for Time Slot B, write 0 to Bit 6. Either or both interrupts can be set.
2. Configure the interrupt pin (GPIOx) by writing the appropriate value to the bits in Register 0x02.
3. An interrupt generates when the data registers are updated.
4. The interrupt handler must perform the following:
   a. Read Register 0x00 and observe Bit 5 or Bit 6 to confirm which interrupt has occurred. This step is not required if only one interrupt is in use.
   b. Read the data registers before the next sample can be written. The system must have interrupt latency and service time short enough to respond before the next data update, based on the output data rate.
   c. Write a 1 to Bit 5 or Bit 6 in Register 0x00 to clear the interrupt.

If both time slots are in use, it is possible to use only the Time Slot B interrupt to signal when all registers can be read. It is recommended to use the multiword read to transfer the data from the data registers.

Reading Data from Registers Without Interrupts

If the system interrupt response is not fast or predictable enough to use the interrupt method, or if the interrupt pin (GPIOx) is not used, it is possible to obtain reliable data access by using the data hold mechanism. To guarantee that the data read from the registers is from the same sample time, it is necessary to prevent the update of samples while reading the current values. The method for doing register reads without interrupt timing is as follows:

1. Write a 1 to SLOTA_DATA_HOLD or SLOTB_DATA_HOLD (Register 0x5F, Bit 1 and Bit 2, respectively) for the time slot requiring access (both time slots can be accessed). This setting prevents sample updates.
2. Read the registers as desired.
3. Write a 0 to the SLOTA_DATA_HOLD or SLOTB_DATA_HOLD bits (Register 0x5F, Bit 1 and Bit 2, respectively) previously set. Sample updates are allowed again.

Because a new sample may arrive while the reads are occurring, this method prevents the new sample from partially overwriting the data being read.

CLOCKS AND TIMING CALIBRATION

The ADPD105/ADPD106/ADPD107 operate using two internal time bases: a 32 kHz clock sets the sample timing, and a 32 MHz clock controls the timing of the internal functions such as LED pulsing and data capture. Both clocks are internally generated and exhibit device to device variation of approximately 10% (typical).

Heart rate monitoring applications require an accurate time base to achieve an accurate count of beats per minute. The ADPD105/ADPD106/ADPD107 provide a simple calibration procedure for both clocks.

Calibrating the 32 kHz Clock

Calibrating the 32 kHz clock also calibrates items associated with the output data rate. Calibration of this clock is important for applications where an accurate data rate is important, such as heart rate measurements.

To calibrate the 32 kHz clock,

1. Set the sampling frequency to the highest the system can handle, such as 2000 Hz. Because the 32 kHz clock controls sample timing, its frequency is readily accessible via the GPIO0 pin. Configure the interrupt by writing the appropriate value to the bits in Register 0x02 and set the interrupt to occur at the sampling frequency by writing 0 to Register 0x01, Bit 5 or Bit 6. Monitor the GPIO0 pin. The interrupt frequency must match the set sample frequency.
2. If the monitored interrupt frequency is less than the set sampling frequency, increase the CLK32K_ADJUST bit (Register 0x4B, Bits[5:0]). If the monitored interrupt frequency is larger than the set sampling frequency, decrease the CLK32K_ADJUST bits.
3. Repeat Step b until the monitored interrupt signal frequency is close enough to the set sampling frequency.

Calibrating the 32 MHz Clock

Calibrating the 32 MHz clock also calibrates items associated with the fine timing within a sample period, such as LED pulse width and spacing, assuming that the 32 kHz clock has been calibrated.

To calibrate the 32 MHz clock,

1. Write 0x1 to Register 0x5F, Bit 0.
2. Enable the CLK_RATIO calculation by writing 0x1 to Register 0x50, Bit 5. This function counts the number of 32 MHz clock cycles in two cycles of the 32 kHz clock. With this function enabled, this cycle value is stored in Register 0x0A, Bits[11:0] and nominally this ratio is 2000 (0x7D0).
3. Calculate the 32 MHz clock error as follows:

   $$Clock\ Error = 32\ \text{MHz} \times (1 - CLK_RATIO/2000)$$

4. Adjust the frequency by setting Bits[7:0] in Register 0x4D per the following equation:

   $$CLK32M_ADJUST = Clock\ Error/109\ \text{kHz}$$

5. Write 0x0 to Register 0x50, Bit 5 to reset the CLK_RATIO function.

Repeat Step 2 through Step 5 until the desired accuracy is achieved.

Write 0x0 to Register 0x5F, Bit 0. Also, set the GPIO0 pin back to the mode desired for normal operation.

OPTIONAL TIMING SIGNALS AVAILABLE ON GPIO0 AND GPIO1

The ADPD105/ADPD106/ADPD107 provide a number of different timing signals, available via the GPIO0 and GPIO1 pins, to enable ease of system synchronization and flexible triggering options. Each of the GPIOx pins can be configured as an open-drain output if they are to share the bus with other drivers, or they can be configured to always drive the bus. Both outputs also have polarity control in situations where a timing signal must be inverted from the default.

Table 23. GPIOx Control Settings

Pin Name	Register[Bits]	Setting Description
GPIO0	0x02[0]	0: polarity active high 1: polarity active low
	0x02[1]	0: always drives the bus 1: drives the bus when asserted
	0x02[2]	0: disables the GPIO0 pin drive 1: enables the GPIO0 pin drive
GPIO1	0x02[8]	0: polarity active high 1: polarity active low
	0x02[9]	0: always drives the bus 1: drives the bus when asserted
	0x4F[6]	0: disables the GPIO1 pin drive 1: enables the GPIO1 pin drive

The various available timing signals are controlled by the settings in Register 0x0B. Bits[12:8] of this register control the timing signals available on GPIO1, and Bits[4:0] control the timing signals available on GPIO0. All of the timing signals described in this data sheet are available on either (or both) of the GPIO0 and GPIO1 pins. Timing diagrams are shown in Figure 41 and Figure 42. The time slot settings used to generate the timing diagrams are described in Table 24.

Table 24. ADPD105/ADPD106/ADPD107 Settings Used for Timing Diagrams Shown in Figure 41 and Figure 42

Register	Setting	Description
0x31	0x0118	Time Slot A: 1 LED pulse
0x36	0x0418	Time Slot B: 4 LED pulses
0x15	0x0120	Time Slot A decimation = 4, Time Slot B decimation = 2

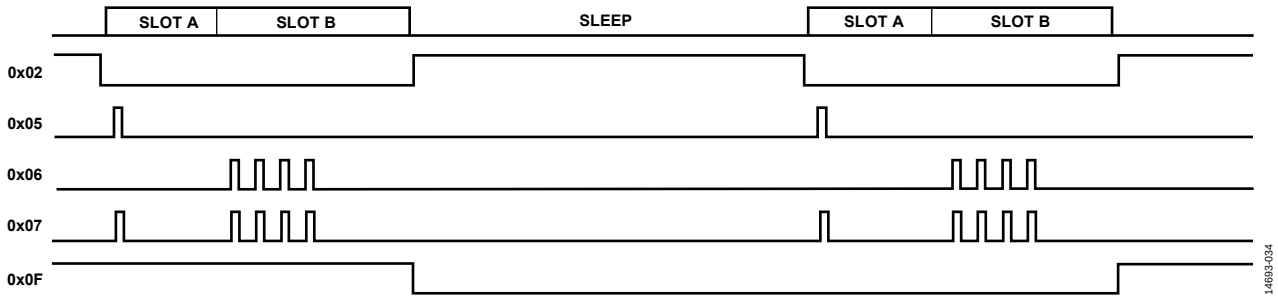

Figure 41. Optional Timing Signals Available on GPIOx—Register 0x0B, Bits[12:8] or Bits[4:0] = 0x02, 0x05, 0x06, 0x07, and 0x0F

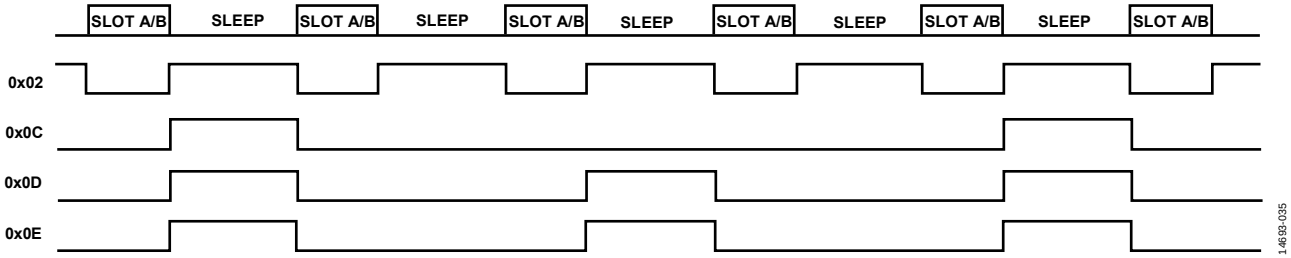

Figure 42. Optional Timing Signals Available on GPIOx—Register 0x0B, Bits[12:8] or Bits[4:0] = 0x02, 0x0C, 0x0D, and 0x0E

ADPD103 Backward Compatibility

Setting Register 0x0B = 0 provides backward compatibility to the ADPD103. The GPIO0 pin mirrors the functionality of the ADPD103 INT pin. The GPIO1 pin mirrors the functionality of the ADPD103 PDSO pin.

Interrupt Function

Setting Register 0x0B, Bits[12:8] or Bits[4:0] = 0x01 configures the respective pin to perform the interrupt function as defined by the settings in Register 0x01.

Sample Timing

Setting Register 0x0B, Bits[12:8] or Bits[4:0] = 0x02 configures the respective pin to provide a signal that asserts at the beginning of the first time slot of the current sample and deasserts at the end of the last time slot of the current sample. For example, if both time slots are enabled, this signal asserts at the beginning of Time Slot A and deasserts at the end of Time Slot B. If only a single time slot is enabled, the signal asserts at the beginning of the enabled time slot and deasserts at the end of this same time slot.

Pulse Outputs

Three options are available to provide a copy of the LED pulse outputs. Setting Register 0x0B, Bits[12:8] or Bits[4:0] = 0x05 provides a copy of the Time Slot A LED pulses on the respective pin. A setting of 0x06 provides the Time Slot B pulses, and a setting of 0x07 provides the pulse outputs of both time slots.

Output Data Cycle Signal

There are three options available to provide a signal that indicates when the output data is written to the output data registers or to the FIFO. Setting Register 0x0B, Bits[12:8] or Bits[4:0] = 0x0C provides a signal that indicates that a data value is written for Time Slot A. A setting of 0x0D provides a signal that indicates that a data value is written for Time Slot B, and 0x0E provides a signal to indicate that a value is written for either time slot. The signal asserts at the end of the time slot, when the output data is already written, and deasserts at the start of the subsequent sample. This timing signal is especially useful in situations where the FIFO is being used. For example, one of the GPIOx pins can be configured to provide an interrupt after the FIFO reaches the FIFO threshold set in Register 0x06, Bits[13:8], while the other GPIOx pin can be configured to provide the output data cycle signal. This signal can be used to trigger a peripheral device, such as an accelerometer, so that time aligned signals are provided to the processor.

$f_S/2$ Output

Setting Register 0x0B, Bits[12:8] or Bits[4:0] = 0x0F configures the respective pin to provide a signal that toggles at half the sampling rate. This timing signal is useful in, for example, situations where more than two LEDs per sample are required. This signal can be used as a select signal to a multiplexer being used to mux two LEDs into a single LED driver, providing the ability to drive up to four separate LEDs per sample period. In such a case, the ADPD105/ADPD106/ADPD107 are operated at 2× the sampling rate and the LED settings can be reconfigured during the sleep period between samples. If identical LED settings (current and timing) are used for the LEDs being muxed, then up to four LEDs can be sampled per sampling period without host inter-vention. An example of this configuration is shown in Figure 43.

The $f_S/2$ timing signal always starts in an active low state when the device switches from standby mode to normal operating mode and transitions to a high state at the completion of the first sample.

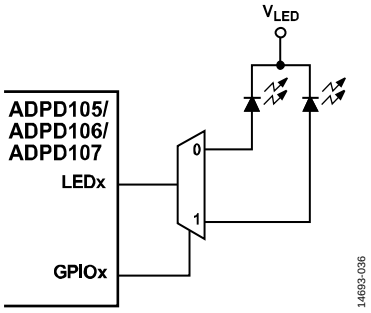

Figure 43. Example Using the $f_S/2$ Timing Signal

Logic 0 Output

Setting Register 0x0B, Bits[12:8] or Bits[4:0] = 0x10 configures the respective pin to provide a Logic 0 output.

Logic 1 Output

Setting Register 0x0B, Bits[12:8] or Bits[4:0] = 0x11 configures the respective pin to provide a Logic 1 output.

32 kHz Oscillator Output

Setting Register 0x0B, Bits[12:8] or Bits[4:0] = 0x13 configures the respective pin to provide a copy of the on-board 32 kHz oscillator.

CALCULATING CURRENT CONSUMPTION

The current consumption of the ADPD105/ADPD106/ADPD107 depends on the user selected operating configuration, as determined by the following equations.

Total Power Consumption

To calculate the total power consumption, use Equation 4.

$$Total\ Power = I_{VDD_AVG} \times V_{DD} + I_{LEDA_AVG} \times V_{LEDA} + I_{LEDB_AVG} \times V_{LEDB} \quad (4)$$

Average V_{DD} Supply Current

To calculate the average V_{DD} supply current, use Equation 5.

$$I_{VDD_AVG} = DR \times ((I_{AFE_A} \times t_{SLOTA}) + (I_{AFE_B} \times t_{SLOTB}) + Q_{PROC_X}) + I_{VDD_STANDBY} \quad (5)$$

where:
DR is the data rate in Hz.
$I_{VDD_STANDBY}$ = 0.2 µA.
Q_{PROC_X} is an average charge associated with a processing time, as follows:

When only Time Slot A is enabled,

$$Q_{PROC_A}\ (C) = 0.135 \times 10^{-6} + (186 \times 10^{-6} \times (2.69 \times 10^{-3} + (6.2 \times 10^{-3}/SCALE_A \times I_{LEDA_PK}))$$

When only Time Slot B is enabled,

$$Q_{PROC_B}\ (C) = 0.135 \times 10^{-6} + (134 \times 10^{-6} \times (2.69 \times 10^{-3} + (6.2 \times 10^{-3}/SCALE_A \times I_{LEDA_PK}))$$

When Time Slot A and Time Slot B are enabled,

$$Q_{PROC_AB}\ (C) = 0.135 \times 10^{-6} + (206 \times 10^{-6} \times (2.69 \times 10^{-3} + (6.2 \times 10^{-3}/SCALE_A \times I_{LEDA_PK}))$$

$$I_{AFE_x}\ (A) = 3.0 \times 10^{-3} + (1.5 \times 10^{-3} \times NUM_CHANNELS) + (5.7 \times 10^{-3}/SCALE_X \times I_{LEDX_PK}) \quad (6)$$

$$t_{SLOTx}\ (sec) = LEDx_OFFSET + LEDx_PERIOD \times PULSE_COUNT \quad (7)$$

where:
NUM_CHANNELS is the number of active channels.
I_{LEDX_PK} is the peak LED current, expressed in amps, for whichever LED is enabled in that particular timeslot. Note that in the Q_{PROC} calculations, the processing charge only scales as a function of the LED current setting for the LED configured to operate in Time Slot A, regardless of whether or not Time Slot A is enabled. For this reason, be sure to minimize the LED peak current for the Time Slot A LED to save power when Time Slot A is not being used.
SCALE_X is the scale factor for the LED current drive determined by Bit 13 of the LEDX_DRV registers: Register 0x22, Register 0x23, and Register 0x24.
LEDx_OFFSET is the pulse start time offset expressed in seconds.
LEDx_PERIOD is the pulse period expressed in seconds.
PULSE_COUNT is the number of pulses.

Note that if either Time Slot A or Time Slot B are disabled, $I_{AFE_x} = 0$ for that respective time slot. Additionally, if operating in digital integrate mode, power savings can be realized by setting Register 0x3C, Bits[8:3] = 010010. This setting disables the band-pass filters that are bypassed in digital integrate mode, changing the AFE power contribution calculation to

$$I_{AFE_x}\,(\text{mA}) = 3.0 \times 10^{-3} + (1.0 \times 10^{-3} \times NUM_CHANNELS) + (5.7 \times 10^{-3}/SCALE_X \times I_{LEDX_PK}) \quad (8)$$

Average V_{LEDA} Supply Current

To calculate the average V_{LEDA} supply current, use Equation 9.

$$I_{LED_AVG_A} = SLOTA_LED_WIDTH \times I_{LEDA_PK} \times DR \times PULSE_COUNT \quad (9)$$

where:
SLOTA_LED_WIDTH is the LED pulse width expressed in seconds.
I_{LEDA_PK} is the peak current, expressed in amps, for whichever LED is selected for Time Slot A.

Average V_{LEDB} Supply Current

To calculate the average V_{LEDB} supply current, use Equation 10.

$$I_{LED_AVG_B} = SLOTB_LED_WIDTH \times I_{LEDB_PK} \times DR \times PULSE_COUNT \quad (10)$$

where:
SLOTB_LED_WIDTH is the LED pulse width expressed in seconds.
I_{LEDB_PK} is the peak current, expressed in amps, for whichever LED is selected for Time Slot B.

OPTIMIZING SNR PER WATT

The ADPD105/ADPD106/ADPD107 offer a variety of parameters that the user can adjust to achieve the best signal. One of the key goals of system performance is to obtain the best system SNR for the lowest total power. This goal is often referred to as optimizing SNR/watt. Even in systems where only the SNR matters and power is a secondary concern, there may be a lower power or a high power means of achieving the same SNR.

Optimizing for Peak SNR

The first step in optimizing for peak SNR is to find a TIA gain and LED level that gives the best performance where the number of LED pulses remains constant. If peak SNR is the goal, the noise section of Table 4 can be used as a guide. It is important to note that the SNR improves as a square root of the number of pulses averaged together, whereas the increase in the LED power consumed is directly proportional to the number of LED pulses. In other words, for every doubling of the LED pulse count, there is a doubling of the LED power consumed and a 3 dB SNR improvement. As a result, avoid any change in the gain configuration that provides less than 3 dB of improvement for a 2× power penalty; any TIA gain configuration that provides more than 3 dB of improvement for a 2× power penalty is a good choice. If peak SNR is the goal and there is no issue saturating the photodiode with LED current at any gain, the 50k TIA gain setting is an optimal choice. After the SNR per pulse per channel is optimized, the user can then increase the number of pulses to achieve the desired system SNR.

Optimizing SNR per Watt in a Signal Limited System

In practice, optimizing for peak SNR is not always practical. One scenario in which the PPG signal has a poor SNR is the signal limited regime. In this scenario, the LED current reaches an upper limit before the desired dc return level is achieved.

Tuning in this case starts where the peak SNR tuning stops. The starting point is nominally a 50k gain, as long as the lowest LED current setting of 8 mA does not saturate the photodiode and the 50k gain provides enough protection against intense background light. In these cases, use a 25k gain as the starting point.

The goal of the tuning process is to bring the dc return signal to a specific ADC range, such as 50% or 60%. The ADC range choice is a function of the margin of headroom needed to prevent saturation as the dc level fluctuates over time. The SNR of the PPG waveform is always some percentage of the dc level. If the target level cannot be achieved at the base gain, increase the gain and repeat the procedure. The tuning system may need to place an upper limit on the gain to prevent saturation from ambient signals.

Tuning the Pulse Count

After the LED peak current and TIA gain are optimized, increasing the number of pulses per sample increases the SNR by the square root of the number of pulses. There are two ways to increase the pulse count. The pulse count registers (Register 0x31, Bits[15:8], and Register 0x36, Bits[15:8]) change the number of pulses per internal sample. Register 0x15, Bits[6:4] and Bits[10:8], controls the number of internal samples that are averaged together before the data is sent to the output. Therefore, the number of pulses per sample is the pulse count register multiplied by the number of subsequent samples being averaged. In general, the internal sampling rate increases as the number of internal sample averages increase to maintain the desired output data rate. The SNR/watt is most optimal with pulse count values of 16 or less. Above pulse count values of 16, the square root relationship does not hold in the pulse count register. However, this relationship continues to hold when averaged between samples using Register 0x15.

Note that increasing LED peak current increases SNR almost directly proportional to LED power, whereas increasing the number of pulses by a factor of n results in only a nominal√(n) increase in SNR.

When using the sample sum/average function (Register 0x15), the output data rate decreases by the number of summed samples. To maintain a static output data rate, increase the sample frequency (Register 0x12) by the same factor as that selected in Register 0x15. For example, for a 100 Hz output data rate and a sample sum/average of four samples, set the sample frequency to 400 Hz.

OPTIMIZING POWER BY DISABLING UNUSED CHANNELS AND AMPLIFIERS

Single-Channel AFE Mode

When using a single photodiode in an application, with that photodiode connected to a single AFE channel (either Channel 1 or Channel 2), the ADPD105/ADPD106/ADPD107 have an option to power down the unused channels, placing the device in single AFE channel mode. Because three of the four AFE channels are turned off in this mode, the power consumption is considerably reduced.

If only Channel 1 is being used, disable Channel 2, Channel 3, and Channel 4 by writing 0x7 to Register 0x3C, Bits[8:6]. If only Channel 2 is being used, disable Channel 1 by writing 0x7 to Register 0x3C, Bits[5:3], and disable Channel 3 and Channel 4 by writing 0x7 to Register 0x37, Bits[15:13].

Dual-Channel AFE Mode

In situations where two of the four channels are in use, the other two channels can be disabled. Enable Channel 1 and Channel 2 (with Channel 3 and Channel 4 disabled) by writing 0x7 to Register 0x37, Bits[15:13]. Operate Channel 3 and Channel 4 in dual channel mode (with Channel 1 and Channel 2 disabled) by writing 0x7 to both Register 0x3C, Bits[5:3] and Register 0x37, Bits[12:10].

Three-channel mode can also be achieved with the appropriate settings. See Table 25 for the settings required to power down different combinations of channels. Refer to the Time Slot Switch section to determine the different combinations of the PDx inputs and enabled channels required to optimize the system configuration for maximum SNR and lowest power.

Table 25. Channel Power-Down Settings

Number of Channels	Channels Enabled	Register 0x3C, Bits[8:6]	Register 0x3C, Bits[5:3]	Register 0x37, Bits[15:13]	Register 0x37, Bits[12:10]
1	Channel 1	0x7	0x0	Not applicable	Not applicable
1	Channel 2	0x0	0x7	0x7	0x0
2	Channel 1, Channel 2	0x0	0x0	0x7	0x0
2	Channel 3, Channel 4	0x0	0x7	0x0	0x7
3	Channel 2, Channel 3, Channel 4	0x0	0x7	0x0	0x0
4	All channels	0x0	0x0	0x0	0x0

Powering Down Individual Amplifiers for Additional Power Savings

Each channel includes a TIA, a BPF, and an integrator, which can also be configured as a buffer (see Figure 44).Options are built into the devices to power down individual amplifiers in the signal path. For example, in digital integrate mode, the BPF is bypassed but left powered up by default. The BPF can be disabled completely, which saves 1/3 of the power dissipated by the AFE during the sampling phase. See the descriptions for Register 0x3C and Register 0x37 in Table 30 for information on how to disable the individual amplifiers.

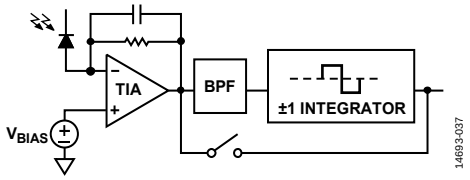

Figure 44. Signal Path Block Diagram

It is important to leave any unused input channels floating for proper device operation.

TIA ADC MODE

There is a way to put the devices into a mode that effectively runs the TIA directly into the ADC without using the analog band-pass filter and integrator as shown in Figure 45. This mode is referred to as TIA ADC mode. There are two basic applications of TIA ADC mode. In normal operation, all of the background light is blocked from the signal chain, and therefore cannot be measured. TIA_ADC mode can be used to measure the amount of background/ambient light. This mode can also be used to measure other dc input currents, such as leakage resistance.

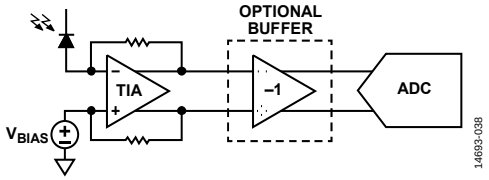

Figure 45. TIA ADC Mode Block Diagram

When the devices are in TIA ADC mode, the band-pass filter and the integrator stage are bypassed. This bypass effectively wires the TIA directly into the ADC. At the set sampling frequency, the ADC samples Channel 1 through Channel 4 in sequential order, and each sample is taken at 1 µs intervals.

There are two modes of operation in TIA ADC mode. One mode is an inverting configuration where TIA ADC mode directly drives the ADC. This mode is enabled by setting Register 0x43 (Time Slot A) and/or Register 0x45 (Time Slot B) to 0xB065, which bypasses the band-pass filter and the integrator. With the ADC offset register(s) for the desired channel set to 0, the output of the ADC is at ~13,000 codes for a single pulse and a zero input current condition. As the input current from the photodiode increases, the ADC output decreases toward 0. This configuration is a legacy TIA ADC mode from the ADPD103 that is kept in the ADPD105/ADPD106/ADPD107 for backward compatibility.

The recommended TIA ADC mode is one in which the band-pass filter is bypassed and the integrator is configured as an inverting buffer. This mode is enabled by writing 0xAE65 to Register 0x43 (Time Slot A) and/or Register 0x45 (Time Slot B) to bypass the band-pass filter. Additionally, Bit 7 of Register 0x42 (Time Slot A) and/or Register 0x44 (Time Slot B) must be set to 1 to configure the integrator as a buffer. With the ADC offset register(s) for the desired channel set to 0, the output of the ADC is at ~3000 codes for a single pulse and a zero input current condition. As the input current from the photodiode increases, the ADC output increases toward 16,384.

The ADC output (ADC_{OUT}) is calculated as follows:

$$ADC_{OUT} = 8192 \pm ((2\ V_{BIAS} - 2iR_F - 1.8\ \text{V})/146\ \mu\text{V/LSB}) \quad (11)$$

where:
V_{BIAS} is the bias voltage for the TIA (the default value is 1.265 V).
i is the input current to the TIA.
R_F is the TIA feedback resistor.

In Equation 11, use + for the inverting configuration and use – when using the noninverting configuration with the buffer.

Equation 11 is an approximation and does not account for internal offsets and gain errors. The calculation also assumes that the ADC offset registers are set to 0

One time slot can be used in TIA ADC mode at the same time the other time slot is being used in normal pulsed mode. This capability is useful for monitoring ambient and pulsed signals at the same time. The ambient signal is monitored during the time slot configured for TIA ADC mode, while the pulsed signal, with the ambient signal rejected, is monitored in the time slot configured for normal mode.

Protecting Against TIA Saturation in Normal Operation

One of the reasons to monitor TIA ADC mode is to protect against environments that may cause saturation. One concern when operating in high light conditions, especially with larger photodiodes, is that the TIA stage may become saturated while the ADPD105/ADPD106/ADPD107 continue to communicate data. The resulting saturation is not typical. The TIA, based on its settings, can only handle a certain level of photodiode current. Based on the way the ADPD105/ADPD106/ADPD107 are configured, if there is a current level from the photodiode that is larger than the TIA can handle, the TIA output during the LED pulse effectively extends the current pulse, making it wider. The AFE timing is then violated because the positive portion of the band-pass filter output extends into the negative section of the integration window. Thus, the photosignal is subtracted from itself, causing the output signal to decrease when the effective light signal increases.

To measure the response from the TIA and verify that this stage is not saturating, place the device in TIA ADC mode and slightly modify the timing. Specifically, sweep SLOTx_AFE_OFFSET

until two or three of the four channels reach a minimum value (note that TIA is in an inverting configuration). All four channels do not reach this minimum value because, typically, 3 µs LED pulse widths are used and the ADC samples the four channels sequentially at 1 µs intervals. This procedure aligns the ADC sampling time with the LED pulse to measure the total amount of light falling on the photodetector (for example, background light + LED pulse).

If this minimum value is above 0 LSB, the TIA is not saturated. However, take care, because even if the result is not 0 LSB, operating the device near saturation can quickly result in saturation if light conditions change. A safe operating region is typically at ¾ full scale and lower. Use Table 26 to determine how the input codes map to ADC levels on a per channel per pulse basis. These codes are not the same as in normal mode because the band-pass filter and integrator are not unity-gain elements.

Coarse Ambient Light Measurement

Using the typical values in Table 26, TIA ADC mode can be used to measure or quantify the amount of background or ambient light present on the photodetector. The settings are the same in the method described in the Protecting Against TIA Saturation in Normal Operation section, except the timing used in the normal operating mode is sufficient for this mode. There is no need to sweep SLOTx_AFE_OFFSET. If SLOTx_AFE_OFFSET is in the same place as the normal mode operation, the TIA ADC mode does not return the same value, regardless of whether the LED is on or off.

In TIA_MODE, the dark level is a high level near 13,000 LSBs per channel per pulse (see Table 26). To measure this value, select no photodiode by writing a 0x0 to Register 0x14, Bits[11:8] for Time Slot B or Register 0x14, Bits[7:4] for Time Slot A. This setting internally opens the photodiode connection and gives a baseline LSB value that coincides with a zero signal input.

After Register 0x14 is restored to its normal value, while connecting the photodiode to the TIA, this TIA ADC result can be subtracted from the open photodiode case to yield a background light measurement. Use Table 26 to translate this measurement into an input photocurrent. Use this result for coarse absolute measurements only, because it is typically only accurate to within 10%.

Measuring PCB Parasitic Input Resistance

During the process of mounting the ADPD105/ADPD106/ADPD107, undesired resistance can develop on the inputs through assembly errors or debris on the PCB. These resistances can form between the anode and cathode, or between the anode and some other supply or ground. In normal operation, the ambient rejection feature of the ADPD105/ADPD106/ADPD107 masks the primary effects of these resistances, making it very difficult to detect them. However, even at 1 MΩ to 10 MΩ, such resistance can impact performance significantly through added noise or decreased dynamic range. TIA ADC mode can be used to screen for these assembly issues.

Measuring Shunt Resistance on the Photodiode

A shunt resistor across the photodiode does not generally affect the output level of the device in operation because the effective impedance of the TIA is very low, especially if the photodiode is held to 0 V in operation. However, such resistance can add noise to the system, degrading performance. The best way to detect photodiode leakage, also called photodiode shunt resistance, is to place the device in TIA ADC mode in the dark and vary the operation mode cathode voltage. Setting the cathode to 1.3 V places 0 V across the photodiode because the anode is always at 1.3 V while in operation. Setting the cathode to 1.8 V places 0.5 V across the photodiode. Using the register settings in Table 3 to control the cathode voltage, measure the TIA ADC value at both voltages. Next, divide the voltage difference of 0.5 V by the difference of the ADC result after converting it to a current. This result is the approximate shunt resistance. Values greater than 10 MΩ may be difficult to measure, but this method is useful in identifying gross failures.

Measuring TIA Input Shunt Resistance

A resistance to develop between the TIA input and another supply or ground on the PCB is an example of another problem that can occur. These resistances can force the TIA into saturation prematurely. This premature saturation, in turn, takes away dynamic range from the device in operation and adds a Johnson noise component to the input. To measure these resistances, place the device in TIA ADC mode in the dark and start by measuring the TIA ADC offset level with the photodiode inputs disconnected (Register 0x14, Bits[11:8] = 0 or Register 0x14, Bits[7:4] = 0). From this, subtract the value of TIA ADC mode with the darkened photodiode connected and convert the difference into a current. If the value is positive, and the ADC signal decreased, the resistance is to a voltage higher than 1.3 V, such as V_{DD}. Current entering the TIA causes the output to drop. If the output difference is negative due to an increase of codes at the ADC, current is being pulled out of the TIA and there is a shunt resistance to a lower potential than 1.3 V, such as ground.

Table 26. Analog Specifications for TIA ADC and Digital Integrate Modes

Parameter	Test Conditions/Comments	Typ	Unit
TIA ADC/Digital Integration Saturation Levels	Values expressed per channel, per sample; TIA feedback resistor		
	25 kΩ	38.32	µA
	50 kΩ	19.16	µA
	100 kΩ	9.58	µA
	200 kΩ	4.79	µA
TIA ADC Resolution	Values expressed per channel, per sample; TIA feedback resistor		
	25 kΩ	2.92	nA/LSB
	50 kΩ	1.5	nA/LSB
	100 kΩ	0.73	nA/LSB
	200 kΩ	0.37	nA/LSB
Output with No Input Photocurrent	ADC offset (Register 0x18 to Register 0x21) = 0x0	13,000	LSB

DIGITAL INTEGRATE MODE

Digital integrate mode is built into the ADPD105/ADPD106/ADPD107 and allows the device to accommodate longer LED/AFE pulse widths and different types of sensors at the input. The analog integration mode described in the AFE Operation section is ideally suited for applications requiring a large LED duty cycle, or applications that require customization of the sampling scheme. Digital integrate mode allows the integration function to be performed after the ADC in the digital domain. This mode enables the device to handle a much wider range of sensors at the input.

In digital integrate mode, the ADC performs a conversion every 1 µs during the integration window. During the integration window, the digital engine either adds to or subtracts from the previous sample. The band-pass filter is bypassed and the integrator is converted to a voltage buffer, allowing the digital engine to perform the integration function. In this mode, after the timing is optimized, the output of the ADC increases as the light level on the photodiode increases.

The integration window is a combination of negative and positive windows where the duration of these windows is set by SLOTx_AFE_WIDTH. At the end of the digital integration window, the resulting sum is sent to the decimate unit as the sample for that LED pulse. There is one sample per time slot for every sample cycle. Table 27 lists the registers required for placing the device in digital integrate mode.

There may also be changes needed in the SLOTx_AFE_OFFSET registers and FIFO configuration register (0x11). To read the final value through the FIFO, set the appropriate values in Register 0x11, Bits[4:2] for Time Slot A, and Register 0x11, Bits[8:6] for Time Slot B. Alternatively, the final output is also available through the data registers; Register 0x64, Register 0x70, and Register 0x74 for Time Slot A, and Register 0x68, Register 0x78, and Register 0x7C for Time Slot B.

To put the ADPD105/ADPD106/ADPD107 into digital integration mode during Time Slot A, write 0x1 to Register 0x58, Bit 12. To put the ADPD105/ADPD106/ADPD107 into digital integration mode in Time Slot B, write 0x1 to Register 0x58, Bit 13.

The other writes required to switch to digital integration mode are listed in Table 27.

When using digital integrate mode, up to two photodiodes can be connected to the ADPD105/ADPD106/ADPD107 inputs; one photodiode per PDx input group (PD1/PD2/PD3/PD4 or PD5/PD6/PD7/PD8). Never connect the same photodiode across the two PDx groups. In digital integrate mode, there are options to connect the photodiode to all four AFE channels (PD1/PD2/PD3/PD4 or PD5/PD6/PD7/PD8), or just a single AFE channel (PD1 or PD5). When connecting to a single AFE channel, write 0x1 to Register 0x54, Bit 14 for Time Slot A, or, for Time Slot B, write 0x1 to Register 0x54, Bit 15.

When connecting to a single AFE channel, there is also an option to turn off Channel 2, Channel 3, and Channel 4 (and to save power) by writing 0x7 to Register 0x55, Bits[15:13]. When connecting to all four channels (PD1/PD2/PD3/PD4 or PD5/PD6/PD7/PD8), write 0x0 (default)to Register 0x54, Bit 14 for Time Slot A, or write 0x0 (default) to Register 0x54, Bit 15 for Time Slot B. Ensure that all AFE channels are powered up by writing 0x0 to Register 0x55, Bits[15:13].

Connecting the single photodiode to a single AFE channel offers the best SNR performance in cases where signal is limited, whereas connecting the single photodiode to all four AFE channels offers the best dynamic range in cases where signal is large.

Digital Integration Sampling Modes

There are two sampling modes that can be used while the device is in digital integration mode. These modes are single-sample pair mode and double-sample pair mode.

In single-sample pair mode, there is a single negative sample region and a single positive sample region, shown in Figure 48 and Figure 49. To use single-sample pair mode, write 0x1 to Register 5A, Bit 5 for Time Slot A, or Register 5A, Bit 6 for Time Slot B. The negative sample region starts at SLOTx_AFE_OFFSET + 9 and its duration (the number of samples taken) is set by SLOTx_AFE_WIDTH. The positive sample region starts at SLOTx_AFE_OFFSET + 9 + SLOTx_AFE_WIDTH, and its duration is also set by SLOTx_AFE_WIDTH. Set the timing such that the negative sample region falls entirely in the flat

(dark) portion of the LED response, whereas the positive sample region falls in the pulsed region of the LED response. Placing the LED pulse offset, SLOTx_LED_OFFSET, at the beginning of SLOTx_AFE_OFFSET + 9 + SLOTx_AFE_WIDTH achieves this timing. The output is the difference of the signals in the two regions.

Double-sample pair mode is another way to sample. In this mode, there are two negative sample regions and one long positive sample region (see Figure 46 and Figure 47). To use double-sample pair mode, write 0x0 to Register 0x5A, Bit 5 for Time Slot A, or Bit 6 for Time Slot B. The first negative sample region starts at SLOTx_AFE_OFFSET + 9 and its duration is set by SLOTx_AFE_WIDTH. The positive sample region starts at SLOTx_AFE_OFFSET + 9+ SLOTx_AFE_WIDTH and its duration is twice the SLOTx_AFE_WIDTH. After this, there is another negative sample region that starts at SLOTx_AFE_OFFSET + 9 + 3 × SLOTx_AFE_WIDTH, and its duration is SLOTx_AFE_WIDTH. Set the timing such that both of the negative sample regions fall in the flat (dark) portion of the LED response and the positive sample region falls in the pulsed portion of the LED response. Placing the LED pulse offset, SLOTx_LED_OFFSET at the beginning of SLOTx_AFE_OFFSET + 9 + SLOTx_AFE_WIDTH achieves this timing. The output is calculated by summing the response of all the regions in a negative/positive/negative manner. The double-sample pair mode is useful for cases when the background light is not constant because it has better background rejection, but it also uses more power than single-sample pair mode.

Sample Timing Modes

There are two options for timing the sample regions: gapped mode and continuous mode.

In gapped timing mode, there is a space between the negative and positive sample regions. The width of this region is specified by SLOTA_AFE_FOFFSET for Time Slot A and SLOTB_AFE_FOFFSET for Time Slot B in 31.25 ns steps. To enable this feature, write 0x1 to Register 0x5A, Bit 7. This bit enables gapped timing for the time slot (or time slots) that are in digital integrate mode. This mode is helpful when there are unwanted transients in the LED response that must be ignored for an accurate output.

If there are no concerns about LED response transients, select continuous timing mode. In this mode, there is no space between the negative and positive sample regions. Write 0x0 to Register 0x5A, Bit 7 for continuous timing of the sample regions.

Both gapped and continuous sample timing modes can be used with single-sample pair or double-sample pair mode. Example timing diagrams are shown in Figure 46, Figure 47, Figure 48, and Figure 49.

Background Values

In digital integrate mode, the digital integration background value, DI_BACKGROUND, or dark values are also stored and available as output data. This is in addition to the output value during the LED pulse, DI_OUTPUT, which has the dark value subtracted. DI_BACKGROUND is the sum of the negative region samples.

To include these values in the FIFO, set Register 0x11, Bits[4:2] for Time Slot A, and Register 0x11, Bits[8:6] for Time Slot B. For 16-bit data, set this value to 0x3; for 32-bit data, set this value to 0x04. These settings are also available through the data registers; Register 0x65, Register 0x71, and Register 0x75 for Time Slot A, and Register 0x69, Register 0x79, and Register 0x7D for Time Slot B. It is recommended that the channel offsets (Register 0x18 to Register 0x21) be set to 0x1F00 when including the background values in the FIFO in digital integration mode. These channel offsets do not affect the sample values, but do provide more headroom for the background values.

Saturation Detection in Digital Integrate Mode

In normal operation, when using the band-pass filter and the integrator, the ADC almost always saturates before the TIA. Unlike in normal operation, saturation of the TIA or the ADC cannot be detected solely by looking at the signal value where the signal value is the positive sample region minus the reference region in digital integrate mode. This is because the integrated value does not by itself contain any information indicating whether one of the ADC conversions during the integration period exceeded the ADC output range. As a result, the real-time output may have saturated only for a fraction of the ADC conversions within a sample and the final accumulated sum may not reflect this. To detect TIA saturation in digital integration mode, both the background values, DI_BACKGROUND, and the signal values, DI_OUTPUT, must be collected. Refer to the Background Values section for the correct settings for Register 0x11 that provide these values.

For single-sample pair mode, saturation has occurred when

$$(DI_OUTPUT/(\min(SLOTx_LED_WIDTH, SLOTx_AFE_WIDTH)) + DI_BACKGROUND/AFE_WIDTH)/NUM_PULSES > 0x3FFF$$

For double-sample pair mode, saturation has occurred when

$$(DI_OUTPUT/(\min(SLOTx_LED_WIDTH, 2 \times SLOTx_AFE_WIDTH)) + DI_BACKGROUND/(2 \times SLOTx_AFE_WIDTH))/NUM_PULSES > 0x3FFF$$

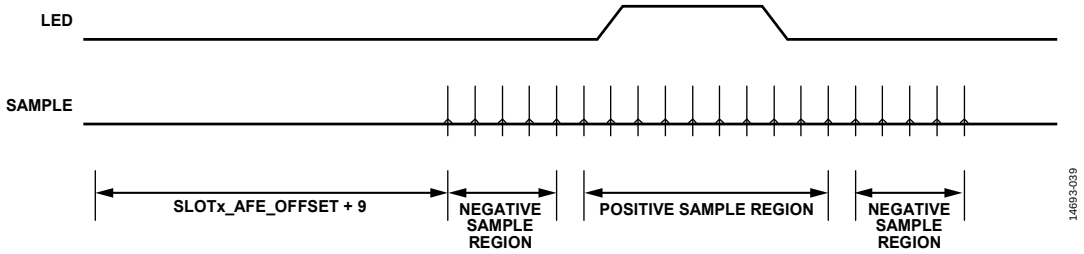

Figure 46. Digital Integration Mode in Double-Sample Pair Mode with Continuous Sample Timing

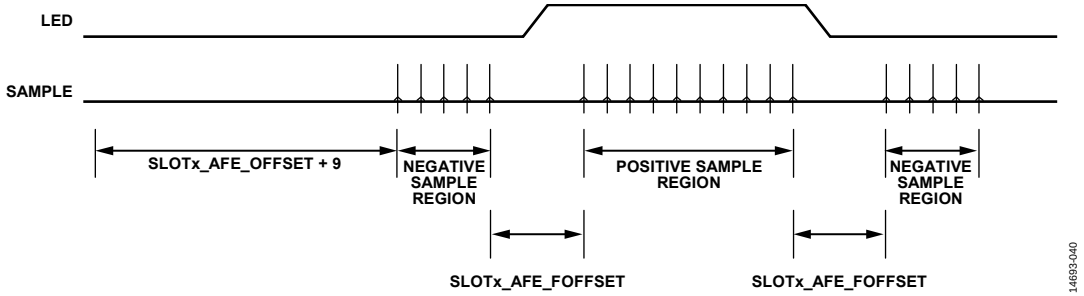

Figure 47. Digital Integration Mode in Double-Sample Pair Mode with Gapped Sample Timing

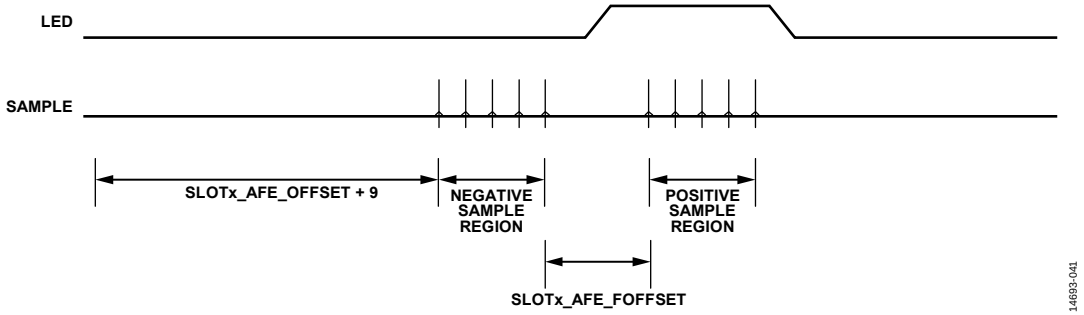

Figure 48. Digital Integration Mode in Single-Sample Pair Mode with Gapped Sample Timing

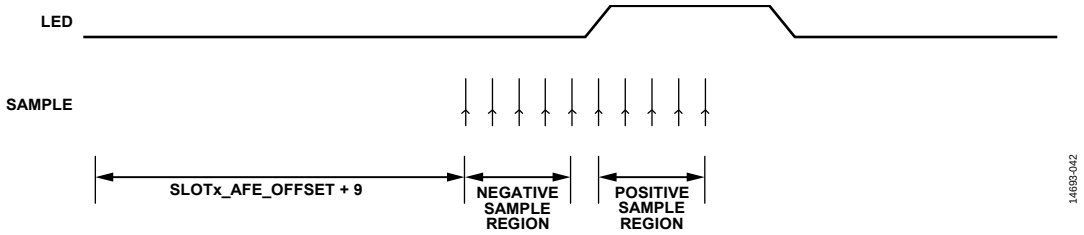

Figure 49. Digital Integration Mode in Single-Sample Pair Mode with Continuous Sample Timing

Table 27. Configuration Registers to Switch Between the Normal Sample Mode, TIA ADC Mode, and Digital Integration Mode

Address	Data Bits	Bit Name	Normal Mode Value	TIA ADC Mode Value	Digital Integration Mode Value	Description
0x42	[15:8]	SLOTA_AFE_MODE	0x1C	Not applicable	0x1D	In normal mode, this setting configures the integrator block for optimal operation. In digital integration mode, this setting configures the integrator block as a buffer. This setting is not important for TIA ADC mode.
	7	SLOTA_INT_AS_BUF	0x0	0x1	Not applicable	0: normal integrator configuration. 1: convert integrator to buffer amplifier (this is done automatically in digital integrate mode).
0x43	[15:0]	SLOTA_AFE_CFG	0xADA5	0xAE65	0xAE65	Time Slot A AFE connection. 0xAE65 bypasses the band-pass filter. 0xB065 can also be used in TIA ADC mode. This setting bypasses the BPF and the integrator.
0x44	[15:8]	SLOTB_AFE_MODE	0x1C	Not applicable	0x1D	In normal mode, this setting configures the integrator block for optimal operation. In digital integration mode, this setting configures the integrator block as a buffer. This setting is not important for TIA ADC mode.
	7	SLOTB_INT_AS_BUF	0x0	0x1	Not applicable	0: normal integrator configuration. 1: convert integrator to buffer amplifier (this is done automatically in digital integrate mode).
0x45	[15:0]	SLOTB_AFE_CFG	0xADA5	0xAE65	0xAE65	Time Slot B AFE connection. 0xAE65 bypasses the band-pass filter. 0xB065 can also be used in TIA ADC mode. This setting bypasses the BPF and the integrator.
0x4E	[15:0]	ADC_TIMING	Not applicable	Not applicable	0x0040	Set ADC clock to 1 MHz in TIA ADC mode.
0x58	13	SLOTB_DIGITAL_INT_EN	0x0	0x0	0x1	Digital integrate mode enable, Time Slot B. 0: disable. 1: enable.
	12	SLOTA_DIGITAL_INT_EN	0x0	0x0	0x1	Digital integrate mode enable, Time Slot A. 0: disable. 1: enable.
0x5A	[15:0]	DIG_INT_CFG	Not applicable	Not applicable	Variable	Configuration of digital integration depends on the use case. This register is ignored for other modes.

PULSE CONNECT MODE

In pulse connect mode, the photodiode input connections are pulsed according to the timing set up in the LED pulse timing registers. In this mode, if the LED pulse timing is set up to provide a 2 µs LED pulse, the device pulses the connection to the photodiode input for 2 µs instead of providing a 2 µs LED pulse. This mode is an alternate to TIA ADC mode, allowing the entire signal path, including the band-pass filter and integrator, to be used to measure ambient light as well as other types of measurements with different types of sensors (for example, ECGs).

To enable pulse connect mode, the device is configured identically to normal mode, except that Register 0x14, Bits[3:2] = 0 for Time Slot B, and Register 0x14, Bits[1:0] = 0 for Time Slot A.

SYNCHRONOUS ECG AND PPG MEASUREMENT USING TIA ADC MODE

In wearable devices developed for monitoring the health care of patients, it is often necessary to have synchronized measurements of biomedical signals. For example, a synchronous measurement of patient ECG and PPG can be used to determine the pulse wave transit time (PWTT), which can then be used to estimate blood pressure.

The circuit shown in Figure 50 shows a synchronous ECG and PPG measurement using the AD8233 and the ADPD105. The AD8233 implements a two-pole high-pass filter with a cutoff frequency at 0.3 Hz, and a two-pole low-pass filter with a cutoff frequency of 37 Hz. The output of the AD8233 is fed to one of the current inputs of the ADPD105 through a 50 kΩ resistor to convert the voltage output of the AD8233 into a current.

The ADPD105 is configured to alternately measure the photodiode signal and the ECG signal from the AD8233 on consecutive timeslots to provide fully synchronized PPG and ECG measurements. Data can be read out of the on-chip FIFO or straight from data registers. The ADPD105 channel used to process the ECG signal is set up in TIA ADC mode and the input bias voltage must be set to the 0.90 V setting using Bits[5:4] of Register 0x42 if the ECG signal is on Time Slot A, or Register 0x44 on Time Slot B. The TIA gain setting can be set to optimize the dynamic range of the signal path. The channel used to process the PPG signal is configured in its normal operating mode. Figure 51 shows a plot of a synchronized ECG and PPG measurement using the AD8233 with the ADPD105.

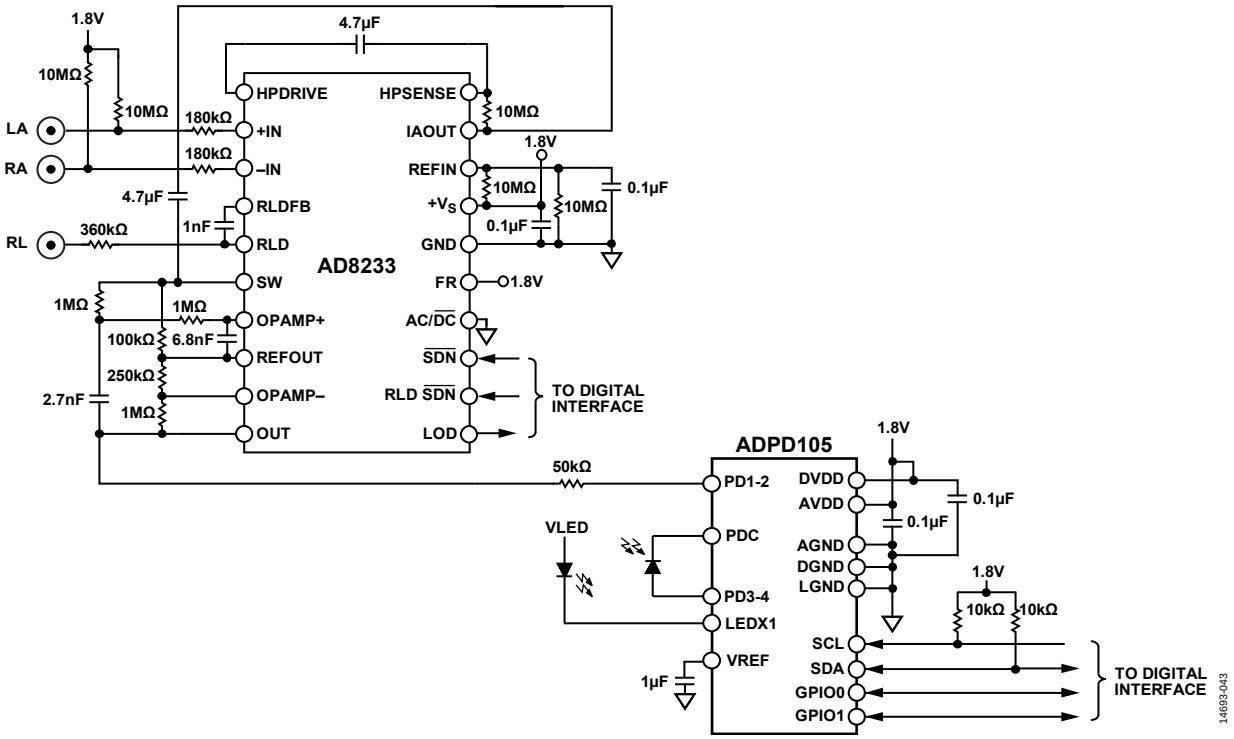

Figure 50. Synchronized PPG and ECG Measurement Using ADPD105 with the AD8233

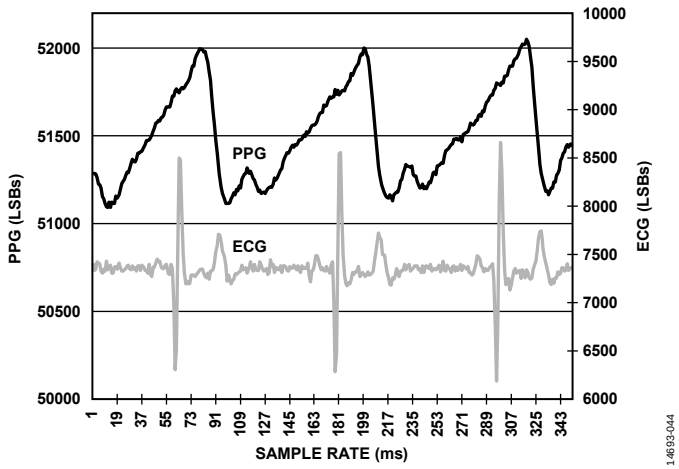

Figure 51. Plot of Synchronized ECG and PPG Waveforms

Measuring Voltages Using the Current Inputs

In some situations, as in a case where a synchronized ECG and PPG measurement is being attempted, a voltage measurement must be made using the current inputs of the ADPD105/ADPD106/ADPD107. First, convert the voltage source to a current by placing a series resistor, R_S, in series between the voltage source and the current input of the device, as shown in Figure 52.

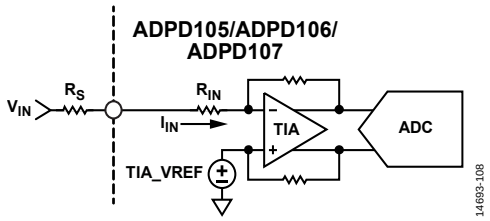

Figure 52. Using the ADPD105/ADPD106/ADPD107 Inputs with Voltage Sources

Secondly, there is a switch resistance, R_{IN}, that must be taken into consideration when converting a voltage source to a current. This switch resistance is not a factor in a typical photodiode application since the device is only dealing with input currents and these currents are not a function of the input resistance. However, when driving the device inputs from a voltage source through a series resistance, R_{IN} must be taken into consideration. The conversion gain from a voltage into a current can be determined by following the schematic in Figure 52.

$$I_{IN} = (V_{IN} - TIA_VREF)/(R_S + R_{IN})$$

Typically, R_{IN} is approximately 13 kΩ. The value of R_{IN} varies as a function of supply voltage. This variability is shown in Figure 53

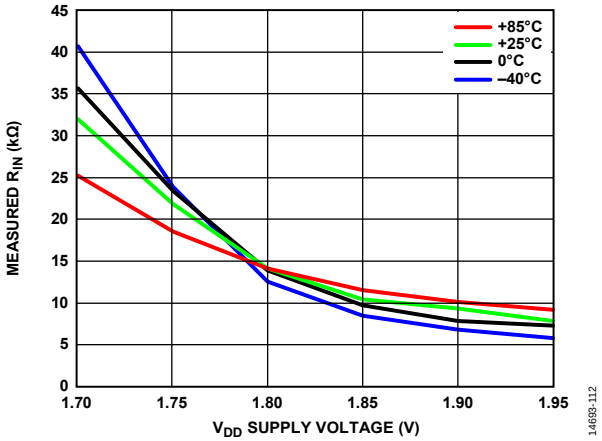

Figure 53. Variability of Switch Input Resistance as a Function of V_{DD} Supply Voltage

REGISTER LISTING

Table 28. Numeric Register Listing[1]

Hex. Addr.	Name	Bits	Bit 15 / Bit 7	Bit 14 / Bit 6	Bit 13 / Bit 5	Bit 12 / Bit 4	Bit 11 / Bit 3	Bit 10 / Bit 2	Bit 9 / Bit 1	Bit 8 / Bit 0	Reset	RW
0x00	Status	[15:8]	FIFO_SAMPLES[7:0]								0x0000	R/W
		[7:0]	Reserved	SLOTB_INT	SLOTA_INT	Reserved						
0x01	INT_MASK	[15:8]	Reserved							FIFO_INT_MASK	0x00FF	R/W
		[7:0]	Reserved	SLOTB_INT_MASK	SLOTA_INT_MASK	Reserved						
0x02	GPIO_DRV	[15:8]	Reserved						GPIO1_DRV	GPIO1_POL	0x0000	R/W
		[7:0]	Reserved					GPIO0_ENA	GPIO0_DRV	GPIO0_POL		
0x06	FIFO_THRESH	[15:8]	Reserved		FIFO_THRESH[5:0]						0x0000	R/W
		[7:0]	Reserved									
0x08	DEVID	[15:8]	REV_NUM[7:0]								0x0516	R
		[7:0]	DEV_ID[7:0]									
0x09	I2CS_ID	[15:8]	ADDRESS_WRITE_KEY[7:0]								0x00C8	R/W
		[7:0]	SLAVE_ADDRESS[6:0]							Reserved		
0x0A	CLK_RATIO	[15:8]	Reserved				CLK_RATIO[11:8]				0x0000	R
		[7:0]	CLK_RATIO[7:0]									
0x0B	GPIO_CTRL	[15:8]	Reserved			GPIO1_ALT_CFG[4:0]					0x0000	R/W
		[7:0]	Reserved			GPIO0_ALT_CFG[4:0]						
0x0D	SLAVE_ADDRESS_KEY	[15:8]	SLAVE_ADDRESS_KEY[15:8]								0x0000	R/W
		[7:0]	SLAVE_ADDRESS_KEY[7:0]									
0x0F	SW_RESET	[15:8]	Reserved								0x0000	R/W
		[7:0]	Reserved							SW_RESET		
0x10	Mode	[15:8]	Reserved								0x0000	R/W
		[7:0]	Reserved						Mode[1:0]			
0x11	SLOT_EN	[15:8]	Reserved		RDOUT_MODE	FIFO_OVRN_PREVENT	Reserved			SLOTB_FIFO_MODE[2]	0x1000	R/W
		[7:0]	SLOTB_FIFO_MODE[1:0]		SLOTB_EN	SLOTA_FIFO_MODE[2:0]			Reserved	SLOTA_EN		
0x12	FSAMPLE	[15:8]	FSAMPLE[15:8]								0x0028	R/W
		[7:0]	FSAMPLE[7:0]									
0x14	PD_LED_SELECT	[15:8]	Reserved				SLOTB_PD_SEL[3:0]				0x0541	R/W
		[7:0]	SLOTA_PD_SEL[3:0]				SLOTB_LED_SEL[1:0]		SLOTA_LED_SEL[1:0]			
0x15	NUM_AVG	[15:8]	Reserved					SLOTB_NUM_AVG[2:0]			0x0600	R/W
		[7:0]	Reserved	SLOTA_NUM_AVG[2:0]			Reserved					
0x18	SLOTA_CH1_OFFSET	[15:8]	SLOTA_CH1_OFFSET[15:8]								0x2000	R/W
		[7:0]	SLOTA_CH1_OFFSET[7:0]									
0x19	SLOTA_CH2_OFFSET	[15:8]	SLOTA_CH2_OFFSET[15:8]								0x2000	R/W
		[7:0]	SLOTA_CH2_OFFSET[7:0]									
0x1A	SLOTA_CH3_OFFSET	[15:8]	SLOTA_CH3_OFFSET[15:8]								0x2000	R/W
		[7:0]	SLOTA_CH3_OFFSET[7:0]									
0x1B	SLOTA_CH4_OFFSET	[15:8]	SLOTA_CH4_OFFSET[15:8]								0x2000	R/W
		[7:0]	SLOTA_CH4_OFFSET[7:0]									
0x1E	SLOTB_CH1_OFFSET	[15:8]	SLOTB_CH1_OFFSET[15:8]								0x2000	R/W
		[7:0]	SLOTB_CH1_OFFSET[7:0]									
0x1F	SLOTB_CH2_OFFSET	[15:8]	SLOTB_CH2_OFFSET[15:8]								0x2000	R/W
		[7:0]	SLOTB_CH2_OFFSET[7:0]									
0x20	SLOTB_CH3_OFFSET	[15:8]	SLOTB_CH3_OFFSET[15:8]								0x2000	R/W
		[7:0]	SLOTB_CH3_OFFSET[7:0]									
0x21	SLOTB_CH4_OFFSET	[15:8]	SLOTB_CH4_OFFSET[15:8]								0x2000	RW
		[7:0]	SLOTB_CH4_OFFSET[7:0]									

Hex. Addr.	Name	Bits	Bit 15 / Bit 7	Bit 14 / Bit 6	Bit 13 / Bit 5	Bit 12 / Bit 4	Bit 11 / Bit 3	Bit 10 / Bit 2	Bit 9 / Bit 1	Bit 8 / Bit 0	Reset	RW
0x22	ILED3_ COARSE	[15:8]	Reserved		ILED3_SCALE	Reserved					0x3000	R/W
		[7:0]	Reserved	ILED3_SLEW[2:0]			ILED3_COARSE[3:0]					
0x23	ILED1_ COARSE	[15:8]	Reserved		ILED1_SCALE	Reserved					0x3000	R/W
		[7:0]	Reserved	ILED1_SLEW[2:0]			ILED1_COARSE[3:0]					
0x24	ILED2_ COARSE	[15:8]	Reserved		ILED2_SCALE	Reserved					0x3000	R/W
		[7:0]	Reserved	ILED2_SLEW[2:0]			ILED2_COARSE[3:0]					
0x25	ILED_FINE	[15:8]	ILED3_FINE[4:0]					ILED2_FINE[4:2]			0x630C	R/W
		[7:0]	ILED2_FINE[1:0]		Reserved	ILED1_FINE[4:0]						
0x30	SLOTA_LED_ PULSE	[15:8]	Reserved			SLOTA_LED_WIDTH[4:0]					0x0320	R/W
		[7:0]	SLOTA_LED_OFFSET[7:0]									
0x31	SLOTA_ NUMPULSES	[15:8]	SLOTA_LED_NUMBER[7:0]								0x0818	R/W
		[7:0]	SLOTA_LED_PERIOD[7:0]									
0x34	LED_ DISABLE	[15:8]	Reserved						SLOTB_ LED_DIS	SLOTA_ LED_DIS	0x0000	R/W
		[7:0]	Reserved									
0x35	SLOTB_LED_ PULSE	[15:8]	Reserved			SLOTB_LED_WIDTH[4:0]					0x0320	R/W
		[7:0]	SLOTB_LED_OFFSET[7:0]									
0x36	SLOTB_ NUMPULSES	[15:8]	SLOTB_LED_NUMBER[7:0]								0x0818	R/W
		[7:0]	SLOTB_LED_PERIOD[7:0]									
0x37	ALT_PWR_ DN	[15:8]	CH34_DISABLE[15:13]				CH2_DISABLE[12:10]		Reserved		0x0000	R/W
		[7:0]	Reserved									
0x38	EXT_SYNC_ STARTUP	[15:8]	EXT_SYNC_STARTUP[15:8]								0x000	R/W
		[7:0]	EXT_SYNC_STARTUP[7:0]									
0x39	SLOTA_AFE_ WINDOW	[15:8]	SLOTA_AFE_WIDTH[4:0]					SLOTA_AFE_OFFSET[5:3]			0x22FC	R/W
		[7:0]	SLOTA_AFE_OFFSET[2:0]				SLOTA_AFE_FOFFSET[4:0]					
0x3B	SLOTB_AFE_ WINDOW	[15:8]	SLOTB_AFE_WIDTH[4:0]					SLOTB_AFE_OFFSET[5:3]			0x22FC	R/W
		[7:0]	SLOTB_AFE_OFFSET[2:0]				SLOTB_AFE_FOFFSET[4:0]					
0x3C	AFE_PWR_ CFG1	[15:8]	Reserved		Reserved			Reserved	V_CATHODE	AFE_ POWER-DOWN[5]	0x3006	R/W
		[7:0]	AFE_POWERDOWN[4:0]					Reserved				
0x42	SLOTA_ TIA_CFG	[15:8]	SLOTA_AFE_MODE[7:0]								0x1C38	R/W
		[7:0]	SLOTA_INT_ AS_BUF	SLOTA_TIA_ IND_EN	SLOTA_TIA_VBIAS[1:0]		Reserved (write 0x1)		SLOTA_TIA_GAIN[1:0]			
0x43	SLOTA_ AFE_CFG	[15:8]	SLOTA_AFE_CFG[15:8]								0xADA5	R/W
		[7:0]	SLOTA_AFE_CFG[7:0]									
0x44	SLOTB_ TIA_CFG	[15:8]	SLOTB_AFE_MODE[7:0]								0x1C38	R/W
		[7:0]	SLOTB_INT_ AS_BUF	SLOTB_ TIA_IND_EN	SLOTB_TIA_VBIAS[1:0]		Reserved (write 0x1)		SLOTB_TIA_GAIN[1:0]			
0x45	SLOTB_ AFE_CFG	[15:8]	SLOTB_AFE_CFG[15:8]								0xADA5	R/W
		[7:0]	SLOTB_AFE_CFG[7:0]									
0x4B	SAMPLE_ CLK	[15:8]	Reserved							CLK32K_ BYP	0x2612	R/W
		[7:0]	CLK32K_EN	Reserved	CLK32K_ADJUST[5:0]							
0x4D	CLK32M_ ADJUST	[15:8]	Reserved								0x0098	R/W
		[7:0]	CLK32M_ADJUST[7:0]									
0x4E	ADC_CLOCK	[15:8]	ADC_TIMING[15:8]								0x0060	R/W
		[7:0]	ADC_TIMING[7:0]									
0x4F	EXT_SYNC_ SEL	[15:8]	Reserved								0x2090	R/W
		[7:0]	Reserved	GPIO1_OE	GPIO1_IE	Reserved	EXT_SYNC_SEL[1:0]		GPIO0_IE	Reserved		
0x50	CLK32M_ CAL_EN	[15:8]	Reserved								0x0000	R/W
		[7:0]	Reserved	GPIO1_CTRL	CLK32M_ CAL_EN	Reserved						
0x54	AFE_PWR_ CFG2	[15:8]	SLOTB_ SINGLE_CH_ DIG_INT	SLOTA_ SINGLE_CH_ DIG_INT	SLEEP_V_CATHODE [1:0]		SLOTB_V_CATHODE[1:0]		SLOTA_V_CATHODE[1:0]		0x0020	R/W
		[7:0]	REG54_VCAT_ ENABLE	Reserved								
0x55	TIA_INDEP_ GAIN	[15:8]	DIGINT_POWER[2:0]			Reserved	SLOTB_TIA_GAIN_4[1:0]		SLOTB_TIA_GAIN_3[1:0]		0x0000	R/W
		[7:0]	SLOTB_TIA_GAIN_2[1:0]		SLOTA_TIA_GAIN_4[1:0]		SLOTA_TIA_GAIN_3[1:0]		SLOTA_TIA_GAIN_2[1:0]			

Hex. Addr.	Name	Bits	Bit 15 / Bit 7	Bit 14 / Bit 6	Bit 13 / Bit 5	Bit 12 / Bit 4	Bit 11 / Bit 3	Bit 10 / Bit 2	Bit 9 / Bit 1	Bit 8 / Bit 0	Reset	RW
0x58	DIGITAL_ INT_EN	[15:8]	Reserved		SLOTB_ DIGITAL_ INT_EN	SLOTA_ DIGITAL_INT_ EN	Reserved				0x0000	R/W
		[7:0]	Reserved									
0x5A	DIG_ INT_CFG	[15:8]	Reserved								0x0000	R/W
		[7:0]	DIG_INT_ GAPMODE	SLOTB_DIG_ INT_SAMPLE_ MODE	SLOTA_DIG_ INT_SAMPLE_ MODE	Reserved						
0x5F	DATA_ ACCESS_CTL	[15:8]	Reserved								0x0000	R/W
		[7:0]	Reserved					SLOTB_ DATA_ HOLD	SLOTA_ DATA_ HOLD	DIGITAL_ CLOCK_ ENA		
0x60	FIFO_ ACCESS	[15:8]	FIFO_DATA[15:8]								0x0000	R
		[7:0]	FIFO_DATA[7:0]									
0x64	SLOTA_ PD1_16BIT	[15:8]	SLOTA_CH1_16BIT[15:8]								0x0000	R
		[7:0]	SLOTA_CH1_16BIT[7:0]									
0x65	SLOTA_ PD2_16BIT	[15:8]	SLOTA_CH2_16BIT[15:8]								0x0000	R
		[7:0]	SLOTA_CH2_16BIT[7:0]									
0x66	SLOTA_ PD3_16BIT	[15:8]	SLOTA_CH3_16BIT[15:8]								0x0000	R
		[7:0]	SLOTA_CH3_16BIT[7:0]									
0x67	SLOTA_ PD4_16BIT	[15:8]	SLOTA_CH4_16BIT[15:8]								0x0000	R
		[7:0]	SLOTA_CH4_16BIT[7:0]									
0x68	SLOTB_ PD1_16BIT	[15:8]	SLOTB_CH1_16BIT[15:8]								0x0000	R
		[7:0]	SLOTB_CH1_16BIT[7:0]									
0x69	SLOTB_ PD2_16BIT	[15:8]	SLOTB_CH2_16BIT[15:8]								0x0000	R
		[7:0]	SLOTB_CH2_16BIT[7:0]									
0x6A	SLOTB_ PD3_16BIT	[15:8]	SLOTB_CH3_16BIT[15:8]								0x0000	R
		[7:0]	SLOTB_CH3_16BIT[7:0]									
0x6B	SLOTB_ PD4_16BIT	[15:8]	SLOTB_CH4_16BIT[15:8]								0x0000	R
		[7:0]	SLOTB_CH4_16BIT[7:0]									
0x70	A_PD1_ LOW	[15:8]	SLOTA_CH1_LOW[15:8]								0x0000	R
		[7:0]	SLOTA_CH1_LOW[7:0]									
0x71	A_PD2_ LOW	[15:8]	SLOTA_CH2_LOW[15:8]								0x0000	R
		[7:0]	SLOTA_CH2_LOW[7:0]									
0x72	A_PD3_ LOW	[15:8]	SLOTA_CH3_LOW[15:8]								0x0000	R
		[7:0]	SLOTA_CH3_LOW[7:0]									
0x73	A_PD4_ LOW	[15:8]	SLOTA_CH4_LOW[15:8]								0x0000	R
		[7:0]	SLOTA_CH4_LOW[7:0]									
0x74	A_PD1_ HIGH	[15:8]	SLOTA_CH1_HIGH[15:8]								0x0000	R
		[7:0]	SLOTA_CH1_HIGH[7:0]									
0x75	A_PD2_ HIGH	[15:8]	SLOTA_CH2_HIGH[15:8]								0x0000	R
		[7:0]	SLOTA_CH2_HIGH[7:0]									
0x76	A_PD3_ HIGH	[15:8]	SLOTA_CH3_HIGH[15:8]								0x0000	R
		[7:0]	SLOTA_CH3_HIGH[7:0]									
0x77	A_PD4_ HIGH	[15:8]	SLOTA_CH4_HIGH[15:8]								0x0000	R
		[7:0]	SLOTA_CH4_HIGH[7:0]									
0x78	B_PD1_ LOW	[15:8]	SLOTB_CH1_LOW[15:8]								0x0000	R
		[7:0]	SLOTB_CH1_LOW[7:0]									
0x79	B_PD2_ LOW	[15:8]	SLOTB_CH2_LOW[15:8]								0x0000	R
		[7:0]	SLOTB_CH2_LOW[7:0]									
0x7A	B_PD3_ LOW	[15:8]	SLOTB_CH3_LOW[15:8]								0x0000	R
		[7:0]	SLOTB_CH3_LOW[7:0]									
0x7B	B_PD4_ LOW	[15:8]	SLOTB_CH4_LOW[15:8]								0x0000	R
		[7:0]	SLOTB_CH4_LOW[7:0]									
0x7C	B_PD1_ HIGH	[15:8]	SLOTB_CH1_HIGH[15:8]								0x0000	R
		[7:0]	SLOTB_CH1_HIGH[7:0]									
0x7D	B_PD2_ HIGH	[15:8]	SLOTB_CH2_HIGH[15:8]								0x0000	R
		[7:0]	SLOTB_CH2_HIGH[7:0]									

Hex. Addr.	Name	Bits	Bit 15 / Bit 7	Bit 14 / Bit 6	Bit 13 / Bit 5	Bit 12 / Bit 4	Bit 11 / Bit 3	Bit 10 / Bit 2	Bit 9 / Bit 1	Bit 8 / Bit 0	Reset	RW
0x7E	B_PD3_ HIGH	[15:8]	SLOTB_CH3_HIGH[15:8]								0x0000	R
		[7:0]	SLOTB_CH3_HIGH[7:0]									
0x7F	B_PD4_ HIGH	[15:8]	SLOTB_CH4_HIGH[15:8]								0x0000	R
		[7:0]	SLOTB_CH4_HIGH[7:0]									

[1] The recommended values are not shown. Only power-on reset values are shown in Table 28. The recommended values are largely dependent on use case. See Table 29 to Table 35 for the recommended values.

LED CONTROL REGISTERS

Table 29. LED Control Registers

Address	Data Bit	Default Value	Access	Name	Description
0x14	[15:12]	0x0	R/W	Reserved	Write 0x0 to these bits for proper operation.
	[11:8]	0x5	R/W	SLOTB_PD_SEL	PDx connection selection for Time Slot B. See Figure 22 and Figure 23 0x0: all photodiode inputs are floating. 0x1: all photodiode inputs are connected during Time Slot B. 0x5: PD1/PD2/PD3/PD4 are connected during Time Slot B. Other: reserved.
	[7:4]	0x4	R/W	SLOTA_PD_SEL	PDx connection selection for Time Slot A. See Figure 22 and Figure 23. 0x0: all photodiode inputs are floating. 0x1: all photodiode inputs are connected during Time Slot A. 0x5: PD1/PD2/PD3/PD4 are connected during Time Slot A. Other: reserved.
	[3:2]	0x0	R/W	SLOTB_LED_SEL	Time Slot B LED configuration. These bits determine which LED is associated with Time Slot B. 0x0: pulse PDx connection to AFE. 0x1: LEDX1 pulses during Time Slot B. 0x2: LEDX2 pulses during Time Slot B. 0x3: LEDX3 pulses during Time Slot B.
	[1:0]	0x1	R/W	SLOTA_LED_SEL	Time Slot A LED configuration. These bits determine which LED is associated with Time Slot A. 0x0: pulse PDx connection to AFE. 0x1: LEDX1 pulses during Time Slot A. 0x2: LEDX2 pulses during Time Slot A. 0x3: LEDX3 pulses during Time Slot A.
0x22	[15:14]	0x0	R/W	Reserved	Write 0x0.
	13	0x1	R/W	ILED3_SCALE	LEDX3 current scale factor. 1: 100% strength. 0: 40% strength; sets the LEDX3 driver in low power mode. LEDX3 Current Scale = 0.4 + 0.6 × (Register 0x22, Bit 13).
	12	0x1	R/W	Reserved	Write 0x1.
	[11:7]	0x0	R/W	Reserved	Write 0x0.
	[6:4]	0x0	R/W	ILED3_SLEW	LEDX3 driver slew rate control. The slower the slew rate, the safer the performance in terms of reducing the risk of overvoltage of the LED driver. 0x0: the slowest slew rate. … 0x7: the fastest slew rate.
	[3:0]	0x0	R/W	ILED3_COARSE	LEDX3 coarse current setting. Coarse current sink target value of LEDX3 in standard operation. 0x0: lowest coarse setting. … 0xF: highest coarse setting. $LED3_{PEAK} = LED3_{COARSE} \times LED3_{FINE} \times LED3_{SCALE}$ where: $LED3_{PEAK}$ is the LEDX3 peak target value (mA). $LED3_{COARSE}$ = 50.3 + 19.8 × (*Register 0x22, Bits[3:0]*). $LED3_{FINE}$ = 0.74 + 0.022 × (*Register 0x25, Bits[15:11]*). $LED3_{SCALE}$ = 0.4 + 0.6 × (*Register 0x22, Bit 13*).

Address	Data Bit	Default Value	Access	Name	Description
0x23	[15:14]	0x0	R/W	Reserved	Write 0x0.
	13	0x1	R/W	ILED1_SCALE	LEDX1 current scale factor. 1: 100% strength. 0: 40% strength; sets the LEDX1 driver in low power mode. *LEDX1 Current Scale* = 0.4 + 0.6 × (*Register 0x23, Bit 13*).
	12	0x1	R/W	Reserved	Write 0x1.
	[11:7]	0x0	R/W	Reserved	Write 0x0.
	[6:4]	0x0	R/W	ILED1_SLEW	LEDX1 driver slew rate control. The slower the slew rate, the safer the performance in terms of reducing the risk of overvoltage of the LED driver. 0: the slowest slew rate. … 7: the fastest slew rate.
	[3:0]	0x0	R/W	ILED1_COARSE	LEDX1 coarse current setting. Coarse current sink target value of LEDX1 in standard operation. 0x0: lowest coarse setting. … 0xF: highest coarse setting. $LED1_{PEAK} = LED1_{COARSE} \times LED1_{FINE} \times LED1_{SCALE}$ where: $LED1_{PEAK}$ is the LEDX1 peak target value (mA). $LED1_{COARSE}$ = 50.3 + 19.8 × (*Register 0x23, Bits[3:0]*). $LED1_{FINE}$ = 0.74 + 0.022 × (*Register 0x25, Bits[4:0]*). $LED1_{SCALE}$ = 0.4 + 0.6 × (*Register 0x23, Bit 13*).
0x24	[15:14]	0x0	R/W	Reserved	Write 0x0.
	13	0x1	R/W	ILED2_SCALE	LEDX2 current scale factor. 1: 100% strength. 0: 40% strength; sets the LEDX2 driver in low power mode. *LED2 Current Scale* = 0.4 + 0.6 × (*Register 0x24, Bit 13*)
	12	0x1	R/W	Reserved	Write 0x1.
	[11:7]	0x0	R/W	Reserved	Write 0x0.
	[6:4]	0x0	R/W	ILED2_SLEW	LEDX2 driver slew rate control. The slower the slew rate, the safer the performance in terms of reducing the risk of overvoltage of the LED driver. 0: the slowest slew rate. … 7: the fastest slew rate.
	[3:0]	0x0	R/W	ILED2_COARSE	LEDX2 coarse current setting. Coarse current sink target value of LEDX2 in standard operation. 0x0: lowest coarse setting. … 0xF: highest coarse setting. $LED2_{PEAK} = LED2_{COARSE} \times LED2_{FINE} \times LED2_{SCALE}$ where: $LED2_{PEAK}$ is the LEDX2 peak target value (mA). $LED2_{COARSE}$ = 50.3 + 19.8 × (*Register 0x24, Bits[3:0]*). $LED2_{FINE}$ = 0.74 + 0.022 × (*Register 0x25, Bits[10:6]*). $LED2_{SCALE}$ = 0.4 + 0.6 × (*Register 0x24, Bit 13*).

Address	Data Bit	Default Value	Access	Name	Description
0x25	[15:11]	0xC	R/W	ILED3_FINE	LEDX3 fine adjust. Current adjust multiplier for LED3. *LEDX3 fine adjust* = 0.74 + 0.022 × (*Register 0x25, Bits[15:11]*). See Register 0x22, Bits[3:0], for the full LED3 formula.
	[10:6]	0xC	R/W	ILED2_FINE	LEDX2 fine adjust. Current adjust multiplier for LED2. *LEDX2 fine adjust* = 0.74 + 0.022 × (*Register 0x25, Bits[10:6]*). See Register 0x24, Bits[3:0], for the full LED2 formula.
	5	0x0	R/W	Reserved	Write 0x0.
	[4:0]	0xC	R/W	ILED1_FINE	LEDX1 fine adjust. Current adjust multiplier for LED1. *LEDX1 fine adjust* = 0.74 + 0.022 × (*Register 0x25, Bits[4:0]*). See Register 0x23, Bits[3:0], for the full LED1 formula.
0x30	[15:13]	0x0	R/W	Reserved	Write 0x0.
	[12:8]	0x3	R/W	SLOTA_LED_WIDTH	LED pulse width (in 1 µs step) for Time Slot A.
	[7:0]	0x20	R/W	SLOTA_LED_OFFSET	LED offset width (in 1 µs step) for Time Slot A.
0x31	[15:8]	0x08	R/W	SLOTA_LED_NUMBER	LED Time Slot A pulse count. n_A: number of LED pulses in Time Slot A. This is typically LED1. Adjust in the application. A setting of six pulses (0x06) is typical.
	[7:0]	0x18	R/W	SLOTA_LED_PERIOD	LED Time Slot A pulse period (in 1 µs step).
0x34	[15:10]	0x00	R/W	Reserved	Write 0x0.
	9	0x0	R/W	SLOTB_LED_DIS	Time Slot B LED disable. 1: disables the LED assigned to Time Slot B. Register 0x34 keeps the drivers active and prevents them from pulsing current to the LEDs. Disabling both LEDs via this register is often used to measure the dark level. Use Register 0x11 instead to enable or disable the actual time slot usage and not only the LED.
	8	0x0	R/W	SLOTA_LED_DIS	Time Slot A LED disable. 1: disables the LED assigned to Time Slot A. Use Register 0x11 instead to enable or disable the actual time slot usage and not only the LED.
	[7:0]	0x00	R/W	Reserved	Write 0x00.
0x35	[15:13]	0x0	R/W	Reserved	Write 0x0.
	[12:8]	0x3		SLOTB_LED_WIDTH	LED pulse width (in 1 µs step) for Time Slot B.
	[7:0]	0x20		SLOTB_LED_OFFSET	LED offset width (in 1 µs step) for Time Slot B.
0x36	[15:8]	0x08	R/W	SLOTB_LED_NUMBER	LED Time Slot B pulse count. n_B: number of LED pulses in Time Slot B. This is typically LED2. A setting of six pulses (0x06) is typical.
	[7:0]	0x18	R/W	SLOTB_LED_PERIOD	LED Time Slot B pulse period (in 1 µs step).

AFE GLOBAL CONFIGURATION REGISTERS

Table 30. AFE Global Configuration Registers

Address	Data Bit	Default Value	Access	Name	Description
0x37	[15:13]	0x0	R/W	CH34_DISABLE	Power-down options for Channel 3 and Channel 4 only. Bit 13: power down Channel 3, Channel 4 TIA op amp. Bit 14: power down Channel 3, Channel 4 BPF op amp. Bit 15: power down Channel 3, Channel 4 integrator op amp.
	[12:10]	0x0	R/W	CH2_DISABLE	Bit 10: power down Channel 2 TIA op amp. Bit 11: power down Channel 2 BPF op amp. Bit 12: power down Channel 2 integrator op amp.
	[9:0]	0x000	R/W	Reserved	Write 0x000.

Address	Data Bit	Default Value	Access	Name	Description
0x3C	[15:14]	0x0	R/W	Reserved	Write 0x0.
	[13:11]	0x6	R/W	Reserved	Write 0x6.
	10	0x0	R/W	Reserved	Reserved.
	9	0x0	R/W	V_CATHODE	0x0: 1.3 V (identical to anode voltage); recommended setting. 0x1: 1.8 V (reverse bias photodiode by 550 mV). This setting may add noise.
	[8:3]	0x00	R/W	AFE_POWERDOWN	AFE channels power-down select. 0x0: keeps all channels on. Bit 3: power down Channel 1 TIA op amp. Bit 4: power down Channel 1 BPF op amp. Bit 5: power down Channel 1 integrator op amp. Bit 6: power down Channel 2, Channel 3, and Channel 4 TIA op amp. Bit 7: power down Channel 2, Channel 3, and Channel 4 BPF op amp. Bit 8: power down Channel 2, Channel 3, and Channel 4 integrator op amp.
	[2:0]	0x6	R/W	Reserved	Write 0x6.
0x54	15	0x0	R/W	SLOTB_SINGLE_CH_DIG_INT	0: in Time Slot B, use all four photodiode channels in parallel for digital integration (default setting for highest dynamic range). 1: in Time Slot B, use only Channel 1 for digital integration. This limits connection to PD1 or PD5.
	14	0x0	R/W	SLOTA_SINGLE_CH_DIG_INT	0: in Time Slot A, use all four photodiode channels in parallel for digital integration (default setting for highest dynamic range) 1: in Time Slot A, use only Channel 1 for digital integration. This limits connection to PD1 or PD5.
	[13:12]	0x0	R/W	SLEEP_V_CATHODE	If Bit 7 = 1; this setting is applied to the cathode voltage while the device is in sleep mode. The anode voltage is always set to the cathode voltage in sleep mode. 0x0: V_{DD} (1.8 V). 0x1: 1.3 V. 0x2: 1.55 V. 0x3: 0.0 V.
	[11:10]	0x0	R/W	SLOTB_V_CATHODE	If Bit 7 = 1; this setting is applied to the cathode voltage while the device is in Time Slot B operation. The anode voltage is always 1.3 V in Time Slot B mode. 0x0: V_{DD} (1.8 V). 0x1: 1.3 V. 0x2: 1.55 V. 0x3: 0.0 V (this forward biases a diode at the input).
	[9:8]	0x0	R/W	SLOTA_V_CATHODE	If Bit 7 = 1; this setting is applied to the cathode voltage while the device is in Time Slot A operation. The anode voltage is always 1.3 V in Time Slot A mode. 0x0: V_{DD} (1.8 V). 0x1: 1.3 V. 0x2: 1.55 V. 0x3: 0.0 V (this forward biases a diode at the input).
	7	0x0	R/W	REG54_VCAT_ENABLE	0: use the cathode voltage settings defined by Register 0x3C, Bit 9. 1: override Register 0x3C, Bit 9 with cathode settings defined by Register 0x54, Bits[13:8].
	[6:0]	0x20	R/W	Reserved	Reserved.

Address	Data Bit	Default Value	Access	Name	Description
0x58	[15:14]	0x0	R/W	Reserved	Reserved.
	13	0x0	R/W	SLOTB_DIGITAL_INT_EN	0x0: Time Slot B operating in normal mode. 0x1: Time Slot B operating in digital integration mode.
	12	0x0	R/W	SLOTA_DIGITAL_INT_EN	0x0: Time Slot A operating in normal mode. 0x1: Time Slot A operating in digital integration mode.
	[11:0]	0x000	R/W	Reserved	Reserved.
0x5A	[15:8]	0x00	R/W	Reserved	Write 0x0.
	7	0x0	R/W	DIG_INT_GAPMODE	Digital integrate gapped mode enable. 0: no gap between negative and positive sample regions. 1: use SLOTA_AFE_FOFFSET for Time Slot A or SLOTB_AFE_FOFFSET for Time Slot B to specify the gap in µs.
	6	0x0	R/W	SLOTB_DIG_INT_SAMPLE_MODE	Digital integrate single sample pair mode for Time Slot B. 0: double sample pair mode. 1: single sampled pair mode.
	5	0x0	R/W	SLOTA_DIG_INT_SAMPLE_MODE	Digital integrate single sample pair mode for Time Slot A. 0: double sample pair mode. 1: single sampled pair mode.
	[4:0]	0x00	R/W	Reserved	Write 0x00.

Table 31. AFE Configuration Registers, Time Slot A

Address	Data Bit	Default Value	Access	Name	Description
0x39	[15:11]	0x4	R/W	SLOTA_AFE_WIDTH	AFE integration window width (in 1 µs step) for Time Slot A.
	[10:5]	0x17	R/W	SLOTA_AFE_OFFSET	AFE integration window coarse offset (in 1 µs step) for Time Slot A.
	[4:0]	0x1C	R/W	SLOTA_AFE_FOFFSET	AFE integration window fine offset (in 31.25 ns step) for Time Slot A.
0x42	[15:8]	0x1C	R/W	SLOTA_AFE_MODE	0x1C: Time Slot A AFE setting for normal mode. All four blocks of the signal chain are in use during normal mode (the TIA, the BPF, followed by the integrator, and finally the ADC). 0x1D: Time Slot A AFE setting for digital integrate mode.
	7	0x0	R/W	SLOTA_INT_AS_BUF	0: normal integrator configuration. 1: converts integrator to buffer amplifier (this is done automatically in digital integrate mode).
	6	0x0	R/W	SLOTA_TIA_IND_EN	Enable Time Slot A TIA gain individual settings. When it is enabled, the Channel 1 TIA gain is set via Register 0x42, Bits[1:0], and the Channel 2 through Channel 4 TIA gain is set via Register 0x55, Bits[5:0]. 0: disable TIA gain individual setting. 1: enable TIA gain individual setting.
	[5:4]	0x3	R/W	SLOTA_TIA_VBIAS	Set V_{BIAS} of the TIA for Time Slot A. 0: 1.14 V. 1: 1.01 V. 2: 0.90 V. 3: 1.27 V (default recommended).
	[3:2]	0x2	R/W	Reserved	Reserved. Write 0x1.
	[1:0]	0x0	R/W	SLOTA_TIA_GAIN	Transimpedance amplifier gain for Time Slot A. When SLOTA_TIA_IND_EN is enabled, this value is for Time Slot B, Channel 1 TIA gain. When SLOTA_TIA_IND_EN is disabled, it is for all four Time Slot A channel TIA gain settings. 0: 200 kΩ. 1: 100 kΩ. 2: 50 kΩ. 3: 25 kΩ.

Address	Data Bit	Default Value	Access	Name	Description
0x43	[15:0]	0xADA5	R/W	SLOTA_AFE_CFG	AFE connection in Time Slot A. 0xADA5: analog full path mode (TIA_BPF_INT_ADC). 0xAE65: TIA ADC mode (if Register 0x42, Bit 7 = 1). 0xB065: TIA ADC mode (if Register 0x42, Bit 7 = 0). 0xAE65: digital integration mode. Others: reserved.
0x55	[15:13]	0x0	R/W	DIGINT_POWER	Power-down for Channel 2, Channel 3, and Channel 4 in digital integration mode. 0: keep all channels powered up. 7: powers down Channel 2, Channel 3, and Channel 4.
	[12]	0x0	R/W	Reserved	Write 0x0.
	[11:10]	0x0	R/W	SLOTB_TIA_GAIN_4	TIA gain for Time Slot B, Channel 4 (PD4). 0: 200 kΩ 1: 100 kΩ. 2: 50 kΩ. 3: 25 kΩ.
	[9:8]	0x0	R/W	SLOTB_TIA_GAIN_3	TIA gain for Time Slot B, Channel 3 (PD3). 0: 200 kΩ 1: 100 kΩ. 2: 50 kΩ. 3: 25 kΩ.
	[7:6]	0x0	R/W	SLOTB_TIA_GAIN_2	TIA gain for Time Slot B, Channel 2 (PD2). 0: 200 kΩ 1: 100 kΩ. 2: 50 kΩ. 3: 25 kΩ.
	[5:4]	0x0	R/W	SLOTA_TIA_GAIN_4	TIA gain for Time Slot A, Channel 4 (PD4). 0: 200 kΩ 1: 100 kΩ. 2: 50 kΩ. 3: 25 kΩ.
	[3:2]	0x0	R/W	SLOTA_TIA_GAIN_3	TIA gain for Time Slot A, Channel 3 (PD3). 0: 200 kΩ 1: 100 kΩ. 2: 50 kΩ. 3: 25 kΩ.
	[1:0]	0x0	R/W	SLOTA_TIA_GAIN_2	TIA gain for Time Slot A, Channel 2 (PD2). 0: 200 kΩ 1: 100 kΩ. 2: 50 kΩ. 3: 25 kΩ.
0x5A	[15:8]	0x00	R/W	Reserved	Write 0x0.
	[7]	0x0	R/W	DIG_INT_GAPMODE	Digital integration gapped mode enable. 0: no gap between negative and positive sample regions. 1: use SLOTA_AFE_FOFFSET for Time Slot A or SLOTB_AFE_FOFFSET for Time Slot B to specify the gap in µs.
	[6]	0x0	R/W	SLOTB_DIG_INT_SAMPLEMODE	Digital integration single-sample pair mode for Time Slot B. 0: double-sample pair mode. 1: single-sampled pair mode.
	[5]	0x0	R/W	SLOTA_DIG_INT_SAMPLEMODE	Digital integration single-sample pair mode for Time Slot A. 0: double-sample pair mode. 1: single-sampled pair mode.
	[4:0]	0x00	R/W	Reserved	Write 0x0.

Table 32. AFE Configuration Registers, Time Slot B

Address	Data Bit	Default Value	Access	Name	Description
0x3B	[15:11]	0x04	R/W	SLOTB_AFE_WIDTH	AFE integration window width (in 1 µs step) for Time Slot B.
	[10:5]	0x17	R/W	SLOTB_AFE_OFFSET	AFE integration window coarse offset (in 1 µs step) for Time Slot B.
	[4:0]	0x1C	R/W	SLOTB_AFE_FOFFSET	AFE integration window fine offset (in 31.25 ns step) for Time Slot B.
0x44	[15:8]	0x1C	R/W	SLOTB_AFE_MODE	0x1C: Time Slot B AFE setting for normal mode (TIA_BPF_INT_ADC). 0x1D: Time Slot B AFE setting for digital integrate mode.
	7	0x0	R/W	SLOTB_INT_AS_BUF	0: normal integrator configuration. 1: convert integrator to buffer amplifier (this is done automatically in digital integrate mode).
	6	0x0	R/W	SLOTB_TIA_IND_EN	Enable Time Slot B TIA gain individual settings. When it is enabled, the Channel 1 TIA gain is set via Register 0x44, Bits[1:0], and the Channel 2 through Channel 4 TIA gain is set via Register 0x55, Bits[11:6]. 0: disable TIA gain individual setting. 1: enable TIA gain individual setting.
	[5:4]	0x3	R/W	SLOTB_TIA_VBIAS	Set VBIAS of the TIA for Time Slot B. 0: 1.14 V. 1: 1.01 V. 2: 0.90 V. 3: 1.27 V (default recommended).
	[3:2]	0x2	R/W	Reserved	Write 0x1.
	[1:0]	0x0	R/W	SLOTB_TIA_GAIN	Transimpedance amplifier gain for Time Slot B. When SLOTB_TIA_IND_EN is enabled, this value is for Time Slot B, Channel 1 TIA gain. When SLOTB_TIA_IND_EN is disabled, it is for all four Time Slot B channel TIA gain settings. 0: 200 kΩ. 1: 100 kΩ. 2: 50 kΩ. 3: 25 kΩ.
0x45	[15:0]	0xADA5	R/W	SLOTB_AFE_CFG	AFE connection in Time Slot B. 0xADA5: analog full path mode (TIA_BPF_INT_ADC). 0xAE65: TIA ADC mode (if Register 0x44, Bit 7 = 1). 0xB065: TIA ADC mode (if Register 0x44, Bit 7 = 0). 0xAE65: digital integration mode. Others: reserved.
0x58	[15:14]	0x0	R/W	Reserved	Write 0x0.
	13	0x0	R/W	SLOTB_DIGITAL_INT_EN	Digital integration mode, enable Time Slot B. 0: disable. 1: enable.
	12	0x0	R/W	SLOTA_DIGITAL_INT_EN	Digital integration mode, enable Time Slot A. 0: disable. 1: enable.
	[11:0]	0x0000	R/W	Reserved	Write 0x0000.

SYSTEM REGISTERS

Table 33. System Registers

Address	Data Bit	Default	Access	Name	Description
0x00	[15:8]	0x00	R/W	FIFO_SAMPLES	FIFO status. Number of available bytes to be read from the FIFO. When comparing this to the FIFO length threshold (Register 0x06, Bits[13:8]), note that the FIFO status value is in bytes and the FIFO length threshold is in words, where one word = two bytes. Write 1 to Bit 15 to clear the contents of the FIFO.
	7	0x0	R/W	Reserved	Write 0x1 to clear this bit to 0x0.
	6	0x0	R/W	SLOTB_INT	Time Slot B interrupt. Describes the type of interrupt event. A 1 indicates an interrupt of a particular event type has occurred. Write a 1 to clear the corresponding interrupt. After clearing, the register goes to 0. Writing a 0 to this register has no effect.
	5	0x0	R/W	SLOTA_INT	Time Slot A interrupt. Describes the type of interrupt event. A 1 indicates an interrupt of a particular event type has occurred. Write a 1 to clear the corresponding interrupt. After clearing, the register goes to 0. Writing a 0 to this register has no effect
	[4:0]	0x00	R/W	Reserved	Write 0x1F to clear these bits to 0x00.
0x01	[15:9]	0x00	R/W	Reserved	Write 0x00.
	8	0x1	R/W	FIFO_INT_MASK	Sends an interrupt when the FIFO data length has exceeded the FIFO length threshold in Register 0x06, Bits[13:8]. A 0 enables the interrupt.
	7	0x1	R/W	Reserved	Write 0x1.
	6	0x1	R/W	SLOTB_INT_MASK	Sends an interrupt on the Time Slot B sample. Write a 1 to disable the interrupt. Write a 0 to enable the interrupt.
	5	0x1	R/W	SLOTA_INT_MASK	Sends an interrupt on the Time Slot A sample. Write a 1 to disable the interrupt. Write a 0 to enable the interrupt.
	[4:0]	0x1F	R/W	Reserved	Write 0x1F.
0x02	[15:10]	0x00	R/W	Reserved	Write 0x0000.
	9	0x0	R/W	GPIO1_DRV	GPIO1 drive. 0: the GPIO1 pin is always driven. 1: the GPIO1 pin is driven when the interrupt is asserted; otherwise, it is left floating and requires a pull-up or pull-down resistor, depending on polarity (operates as open drain). Use this setting if multiple devices must share the GPIO1 pin.
	8	0x0	R/W	GPIO1_POL	GPIO1 polarity. 0: the GPIO1 pin is active high. 1: the GPIO1 pin is active low.
	[7:3]	0x00	R/W	Reserved	Write 0x00
	2	0x0	R/W	GPIO0_ENA	GPIO0 pin enable. 0: disable the GPIO0 pin. The GPIO0 pin floats, regardless of interrupt status. The status register (Address 0x00) remains active. 1: enable the GPIO0 pin.
	1	0x0	R/W	GPIO0_DRV	GPIO0 drive. 0: the GPIO0 pin is always driven. 1: the GPIO0 pin is driven when the interrupt is asserted; otherwise, it is left floating and requires a pull-up or pull-down resistor, depending on polarity (operates as open drain). Use this setting if multiple devices must share the GPIO0 pin.
	0	0x0	R/W	GPIO0_POL	GPIO0 polarity. 0: the GPIO0 pin is active high. 1: the GPIO0 pin is active low.

Address	Data Bit	Default	Access	Name	Description
0x06	[15:14]	0x0	R/W	Reserved	Write 0x0.
	[13:8]	0x00	R/W	FIFO_THRESH	FIFO length threshold. An interrupt is generated when the number of data-words in the FIFO exceeds the value in FIFO_THRESH. The interrupt pin automatically deasserts when the number of data-words available in the FIFO no longer exceeds the value in FIFO_THRESH.
	[7:0]	0x00	R/W	Reserved	Write 0x00.
0x08	[15:8]	0x04	R	REV_NUM	Revision number.
	[7:0]	0x16	R	DEV_ID	Device ID.
0x09	[15:8]	0x00	W	ADDRESS_WRITE_KEY	Write 0xAD when writing to SLAVE_ADDRESS. Otherwise, do not access.
	[7:1]	0x64	R/W	SLAVE_ADDRESS	I^2C slave address.
	0	0x0	R	Reserved	Do not access.
0x0A	[15:12]	0x0	R	Reserved	Write 0x0.
	[11:0]	0x000	R	CLK_RATIO	When the CLK32M_CAL_EN bit (Register 0x50, Bit 5) is set, the device calculates the number of 32 MHz clock cycles in two cycles of the 32 kHz clock. The result, nominally 2000 (0x07D0), is stored in the CLK_RATIO bits.
0x0B	[15:13]	0x0	R/W	Reserved	Write 0x0.
	[12:8]	0x00	R/W	GPIO1_ALT_CFG	Alternate configuration for the GPIO1 pin. 0x0: GPIO1 is backward compatible to the ADPD103 PDSO pin functionality. 0x1: interrupt function provided on GPIO1, as defined in Register 0x01. 0x2: asserts at the start of the first time slot, deasserts at end of last time slot. 0x5: Time Slot A pulse output. 0x6: Time Slot B pulse output. 0x7: pulse output of both time slots. 0xC: output data cycle occurred for Time Slot A. 0xD: output data cycle occurred for Time Slot B. 0xE: output data cycle occurred. 0xF: toggles on every sample, which provides a signal at half the sampling rate. 0x10: ouput = 0 0x11: output = 1 0x13: 32 kHz oscillator output. Remaining settings are not supported.
	[7:5]	0x0	R/W	Reserved	Write 0x0.
	[4:0]	0x00	R/W	GPIO0_ALT_CFG	Alternate configuration for the GPIO0 pin. 0x0: GPIO0 is backward compatible to the ADPD103 INT pin functionality. 0x1: interrupt function provided on GPIO0, as defined in Register 0x01. 0x2: asserts at the start of the first time slot, deasserts at end of last time slot. 0x5: Time Slot A pulse output. 0x6: Time Slot B pulse output. 0x7: pulse output of both time slots. 0xC: output data cycle occurred for Time Slot A. 0xD: output data cycle occurred for Time Slot B. 0xE: output data cycle occurred. 0xF: toggles on every sample, which provides a signal at half the sampling rate. 0x10: output = 0. 0x11: output = 1. 0x13: 32 kHz oscillator output. Remaining settings are not supported.

Address	Data Bit	Default	Access	Name	Description
0x0D	[15:0]	0x0000	R/W	SLAVE_ADDRESS_KEY	Enable changing the I²C address using Register 0x09. 0x04AD: enable address change always. 0x44AD: enable address change if GPIO0 is high. 0x84AD: enable address change if GPIO1 is high. 0xC4AD: enable address change if both GPIO0 and GPIO1 are high.
0x0F	[15:1]	0x0000	R	Reserved	Write 0x0000.
	0	0x0	R/W	SW_RESET	Software reset. Write 0x1 to reset the device. This bit clears itself after a reset. For I²C communications, this command returns an acknowledge and the device subsequently returns to standby mode with all registers reset to the default state.
0x10	[15:2]	0x0000	R/W	Reserved	Write 0x000.
	[1:0]	0x0	R/W	Mode	Determines the operating mode of the ADPD105/ADPD106/ADPD107. 0x0: standby. 0x1: program. 0x2: normal operation.
0x11	[15:14]	0x0	R/W	Reserved	Reserved.
	13	0x0	R/W	RDOUT_MODE	Readback data mode for extended data registers. 0x0: block sum of N samples. 0x1: block average of N samples.
	12	0x1	R/W	FIFO_OVRN_PREVENT	0x0: wrap around FIFO, overwriting old data with new. 0x1: new data if FIFO is not full (recommended setting).
	[11:9]	0x0	R/W	Reserved	Reserved.
	[8:6]	0x0	R/W	SLOTB_FIFO_MODE	Time Slot B FIFO data format. 0: no data to FIFO. 1: 16-bit sample in digital integration mode or 16-bit sum of all four channels when not in digital integration mode. 2: 32-bit sample in digital integration mode or 32-bit sum of all four channels when not in digital integration mode. 3: 16-bit sample and 16-bit background value in digital integration mode. 4: 32-bit sample and 32-bit background value in digital integration mode or four channels of 16-bit sample data for Time Slot B when not in digital integration mode. 6: four channels of 32-bit extended sample data for Time Slot B when not in digital integration mode. Others: reserved. The selected Time Slot B data is saved in the FIFO. Available only if Time Slot A has the same averaging factor, N (Register 0x15, Bits[10:8] = Bits[6:4]), or if Time Slot A is not saving data to the FIFO (Register 0x11, Bits[4:2] = 0).
	5	0x0	R/W	SLOTB_EN	Time Slot B enable. 1: enables Time Slot B.
	[4:2]	0x0	R/W	SLOTA_FIFO_MODE	Time Slot A FIFO data format. 0: no data to FIFO. 1: 16-bit sample in digital integration mode or 16-bit sum of all four channels when not in digital integration mode. 2: 32-bit sample in digital integration mode or 32-bit sum of all four channels when not in digital integration mode. 3: 16-bit sample and 16-bit background value in digital integration mode. 4: 32-bit sample and 32-bit background value in digital integration mode or four channels of 16-bit sample data for Time Slot B when not in digital integration mode. 6: four channels of 32-bit extended sample data for Time Slot B when not in digital integration mode. Others: reserved.
	1	0x0	R/W	Reserved	Write 0x0.
	0	0x0	R/W	SLOTA_EN	Time Slot A enable. 1: enables Time Slot A.

Address	Data Bit	Default	Access	Name	Description
0x38	[15:0]	0x0000	R/W	EXT_SYNC_STARTUP	Write 0x4000 when EXT_SYNC_SEL is b01 or b10. Otherwise, write 0x0.
0x4B	[15:9]	0x13	R/W	Reserved	Write 0x26.
	8	0x0	R/W	CLK32K_BYP	Bypass internal 32 kHz oscillator. 0x0: normal operation. 0x1: provide external clock on the GPIO1 pin. The user must set Register 0x4F, Bits[6:5] = 01 to enable the GPIO1 pin as an input.
	7	0x0	R/W	CLK32K_EN	Sample clock power-up. Enables the data sample clock. 0x0: clock disabled. 0x1: normal operation.
	6	0x0	R/W	Reserved	Write 0x0.
	[5:0]	0x12	R/W	CLK32K_ADJUST	Data sampling (32 kHz) clock frequency adjust. This register is used to calibrate the sample frequency of the device to achieve high precision on the data rate as defined in Register 0x12. Adjusts the sample master 32 kHz clock by 0.6 kHz per LSB. For a 100 Hz sample rate as defined in Register 0x12, 1 LSB of Register 0x4B, Bits[5:0], is 1.9 Hz. Note that a larger value produces a lower frequency. See the Clocks and Timing Calibration section for more information regarding clock adjustment. 00 0000: maximum frequency. 10 0010: typical center frequency. 11 1111: minimum frequency.
0x4D	[15:8]	0x00	R/W	Reserved	Write 0x00.
	[7:0]	0x98	R/W	CLK32M_ADJUST	Internal timing (32 MHz) clock frequency adjust. This register is used to calibrate the internal clock of the device to achieve precisely timed LED pulses. Adjusts the 32 MHz clock by 109 kHz per LSB. See the Clocks and Timing Calibration section for more information regarding clock adjustment. 0000 0000: minimum frequency. 1001 1000: default frequency. 1111 1111: maximum frequency.
0x4E[1]	[15:0]	0x0060	R/W	ADC_TIMING[1]	0x0040: ADC clock speed = 1 MHz. 0x0060: ADC clock speed = 500 kHz.
0x4F	[15:8]	0x20	R/W	Reserved	Write 0x20.
	7	0x1	R/W	Reserved	Write 0x1.
	6	0x0	R/W	GPIO1_OE	GPIO1 pin output enable.
	5	0x0	R/W	GPIO1_IE	GPIO1 pin input enable.
	4	0x1	R/W	Reserved	Write 0x1.
	[3:2]	0x0	R/W	EXT_SYNC_SEL	Sample sync select. 00: use the internal 32 kHz clock with FSAMPLE to select sample timings. 01: use the GPIO0 pin to trigger sample cycle. 10: use the GPIO1 pin to trigger sample cycle. 11: reserved.
	1	0x0	R/W	GPIO0_IE	GPIO0 pin input enable.
	0	0x0	R/W	Reserved	Write 0x0.
0x50	[15:7]	0x000	R/W	Reserved	Write 0x000.
	6	0x0	R/W	GPIO1_CTRL	Controls the GPIO1 output when the GPIO1 output is enabled (GPIO1_OE = 0x1). 0x0: GPIO1 output driven low. 0x1: GPIO1 output driven by the AFE power-down signal.
	5	0x0	R/W	CLK32M_CAL_EN	As part of the 32 MHz clock calibration routine, write 1 to begin the clock ratio calculation. Read the result of this calculation from the CLK_RATIO bits in Register 0x0A. Reset this bit to 0 prior to reinitiating the calculation.
	[4:0]	0x00	R/W	Reserved	Write 0x0.

Address	Data Bit	Default	Access	Name	Description
0x5F	[15:3]	0x0000	R/W	Reserved	Write 0x0000.
	2	0x0	R/W	SLOTB_DATA_HOLD	Setting this bit prevents the update of the data registers corresponding to Time Slot B. Set this bit to ensure that unread data registers are not updated, guaranteeing a contiguous set of data from all four photodiode channels. 1: hold data registers for Time Slot B. 0: allow data register update.
	1	0x0	R/W	SLOTA_DATA_HOLD	Setting this bit prevents the update of the data registers corresponding to Time Slot A. Set this bit to ensure that unread data registers are not updated, guaranteeing a contiguous set of data from all four photodiode channels. 1: hold data registers for Time Slot A. 0: allow data register update.
	0	0x0	R/W	DIGITAL_CLOCK_ENA	Set to 1 in order to enable the 32 MHz clock when calibrating the 32 MHz clock. Always disable the 32 MHz clock following the calibration by resetting this bit to 0.

[1] Clock speed setting is only relevant during digital integrate mode.

ADC REGISTERS

Table 34. ADC Registers

Address	Data Bits	Default	Access	Name	Description
0x12	[15:0]	0x0028	R/W	FSAMPLE	Sampling frequency: f_{SAMPLE} = 32 kHz/(Register 0x12, Bits[15:0] × 4). For example, 100 Hz = 0x0050; 200 Hz = 0x0028.
0x15	[15:11]	0x00	R/W	Reserved	Write 0x0.
	[10:8]	0x6	R/W	SLOTB_NUM_AVG	Sample sum/average for Time Slot B. Specifies the averaging factor, N_B, which is the number of consecutive samples that is summed and averaged after the ADC. Register 0x70 to Register 0x7F hold the data sum. Register 0x64 to Register 0x6B and the data buffer in Register 0x60 hold the data average, which can be used to increase SNR without clipping, in 16-bit registers. The data rate is decimated by the value of the SLOTB_NUMB_AVG bits. 0: 1. 1: 2. 2: 4. 3: 8. 4: 16. 5: 32. 6: 64. 7: 128.
	7	0x0	R/W	Reserved	Write 0x0.
	[6:4]	0x0	R/W	SLOTA_NUM_AVG	Sample sum/average for Time Slot A. N_A: same as Bits[10:8] but for Time Slot A. See description in Register 0x15, Bits[10:8].
	[3:0]	0x0	R/W	Reserved	Write 0x0.
0x18	[15:0]	0x2000	R/W	SLOTA_CH1_OFFSET	Time Slot A Channel 1 ADC offset. The value to subtract from the raw ADC value. A value of 0x2000 is typical.
0x19	[15:0]	0x2000	R/W	SLOTA_CH2_OFFSET	Time Slot A Channel 2 ADC offset. The value to subtract from the raw ADC value. A value of 0x2000 is typical.
0x1A	[15:0]	0x2000	R/W	SLOTA_CH3_OFFSET	Time Slot A Channel 3 ADC offset. The value to subtract from the raw ADC value. A value of 0x2000 is typical.
0x1B	[15:0]	0x2000	R/W	SLOTA_CH4_OFFSET	Time Slot A Channel 4 ADC offset. The value to subtract from the raw ADC value. A value of 0x2000 is typical.
0x1E	[15:0]	0x2000	R/W	SLOTB_CH1_OFFSET	Time Slot B Channel 1 ADC offset. The value to subtract from the raw ADC value. A value of 0x2000 is typical.

Address	Data Bits	Default	Access	Name	Description
0x1F	[15:0]	0x2000	R/W	SLOTB_CH2_OFFSET	Time Slot B Channel 2 ADC offset. The value to subtract from the raw ADC value. A value of 0x2000 is typical.
0x20	[15:0]	0x2000	R/W	SLOTB_CH3_OFFSET	Time Slot B Channel 3 ADC offset. The value to subtract from the raw ADC value. A value of 0x2000 is typical.
0x21	[15:0]	0x2000	R/W	SLOTB_CH4_OFFSET	Time Slot B Channel 4 ADC offset. The value to subtract from the raw ADC value. A value of 0x2000 is typical.

DATA REGISTERS

Table 35. Data Registers

Address	Data Bits	Access	Name	Description
0x60	[15:0]	R	FIFO_DATA	Next available word in FIFO.
0x64	[15:0]	R	SLOTA_CH1_16BIT	16-bit value of Channel1 in Time Slot A.
0x65	[15:0]	R	SLOTA_CH2_16BIT	16-bit value of Channel 2 in Time Slot A.
0x66	[15:0]	R	SLOTA_CH3_16BIT	16-bit value of Channel 3 in Time Slot A.
0x67	[15:0]	R	SLOTA_CH4_16BIT	16-bit value of Channel 4 in Time Slot A.
0x68	[15:0]	R	SLOTB_CH1_16BIT	16-bit value of Channel 1 in Time Slot B.
0x69	[15:0]	R	SLOTB_CH2_16BIT	16-bit value of Channel 2 in Time Slot B.
0x6A	[15:0]	R	SLOTB_CH3_16BIT	16-bit value of Channel 3 in Time Slot B.
0x6B	[15:0]	R	SLOTB_CH4_16BIT	16-bit value of Channel 4 in Time Slot B.
0x70	[15:0]	R	SLOTA_CH1_LOW	Low data-word for Channel 1 in Time Slot A.
0x71	[15:0]	R	SLOTA_CH2_LOW	Low data-word for Channel 2 in Time Slot A.
0x72	[15:0]	R	SLOTA_CH3_LOW	Low data-word for Channel 3 in Time Slot A.
0x73	[15:0]	R	SLOTA_CH4_LOW	Low data-word for Channel 4 in Time Slot A.
0x74	[15:0]	R	SLOTA_CH1_HIGH	High data-word for Channel 1 in Time Slot A.
0x75	[15:0]	R	SLOTA_CH2_HIGH	High data-word for Channel 2 in Time Slot A.
0x76	[15:0]	R	SLOTA_CH3_HIGH	High data-word for Channel 3 in Time Slot A.
0x77	[15:0]	R	SLOTA_CH4_HIGH	High data-word for Channel 4 in Time Slot A.
0x78	[15:0]	R	SLOTB_CH1_LOW	Low data-word for Channel 1 in Time Slot B.
0x79	[15:0]	R	SLOTB_CH2_LOW	Low data-word for Channel 2 in Time Slot B.
0x7A	[15:0]	R	SLOTB_CH3_LOW	Low data-word for Channel 3 in Time Slot B.
0x7B	[15:0]	R	SLOTB_CH4_LOW	Low data-word for Channel 4 in Time Slot B.
0x7C	[15:0]	R	SLOTB_CH1_HIGH	High data-word for Channel 1 in Time Slot B.
0x7D	[15:0]	R	SLOTB_CH2_HIGH	High data-word for Channel 2 in Time Slot B.
0x7E	[15:0]	R	SLOTB_CH3_HIGH	High data-word for Channel 3 in Time Slot B.
0x7F	[15:0]	R	SLOTB_CH4_HIGH	High data-word for Channel 4 in Time Slot B.

REQUIRED START-UP LOAD PROCEDURE

The required start-up load procedure is as follows:

1. Write to 0x1 to Register 0x4B, Bit 7 to enable the clock that drives the state machine.
2. Write 0x0001 to Register 0x10 to enter program mode.
3. Write to the other registers; the register order is not important while the device is in program mode.
4. Write 0x0002 to Register 0x10 to start normal sampling operation.

OUTLINE DIMENSIONS

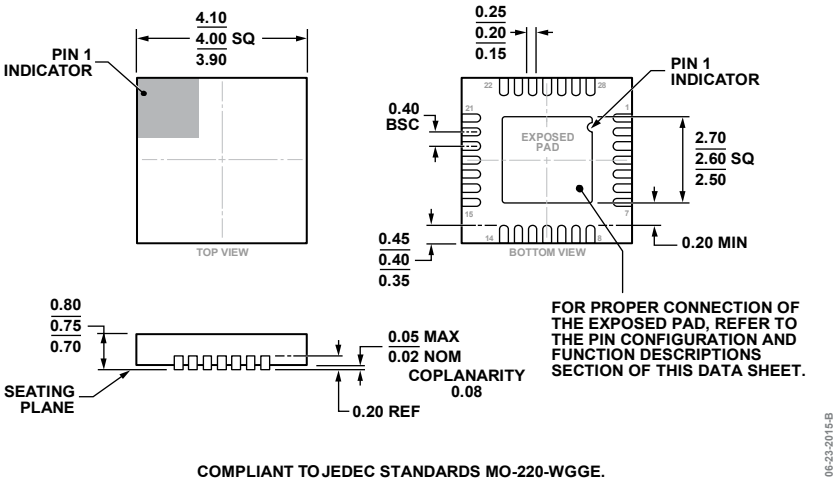

COMPLIANT TO JEDEC STANDARDS MO-220-WGGE.

Figure 54. 28-Lead Lead Frame Chip Scale Package [LFCSP]
4 mm × 4 mm Body and 0.75 mm Package Height
(CP-28-5)
Dimensions shown in millimeters

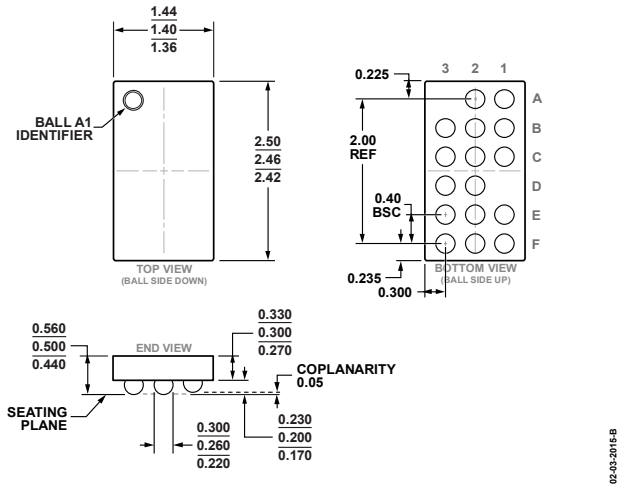

Figure 55. 16-Ball Wafer Level Chip Scale Package [WLCSP]
(CB-16-18)
Dimensions shown in millimeters

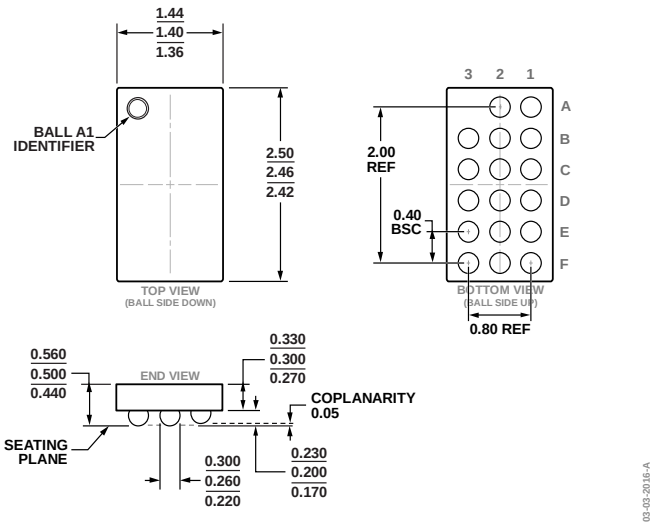

Figure 56. 17-Ball Wafer Level Chip Scale Package [WLCSP] (CB-17-1)
Dimensions shown in millimeters

ORDERING GUIDE

Model[1]	Temperature Range	Package Description	Package Option
ADPD105BCPZ	−40°C to +85°C	28-Lead Lead Frame Chip Scale Package [LFCSP]	CP-28-5
ADPD105BCPZRL	−40°C to +85°C	28-Lead Lead Frame Chip Scale Package [LFCSP]	CP-28-5
ADPD105BCBZR7	−40°C to +85°C	16-Ball Wafer Level Chip Scale Package [WLCSP]	CB-16-18
ADPD106BCBZR7	−40°C to +85°C	16-Ball Wafer Level Chip Scale Package [WLCSP]	CB-16-18
ADPD107BCBZR7	−40°C to +85°C	17-Ball Wafer Level Chip Scale Package [WLCSP]	CB-17-1
EVAL-ADPD105Z-GEN		Generic ADPD105 Evaluation Board[2]	

[1] Z = RoHS Compliant Part.
[2] This evaluation board is used for the ADPD105, ADPD106, and ADPD107.

©2017 Analog Devices, Inc. All rights reserved. Trademarks and registered trademarks are the property of their respective owners.
D14693-0-1/17(A)

Mouser Electronics

Authorized Distributor

Click to View Pricing, Inventory, Delivery & Lifecycle Information:

Analog Devices Inc.:

EVAL-ADPD105Z-GEN ADPD105BCBZR7 ADPD105BCPZ ADPD105BCPZRL