Xstream™ 4.25 Gbps 40 × 40 Digital Crosspoint Switch

Data Sheet

ADN4605

FEATURES

DC to 4.25 Gbps per port NRZ data rate
Adjustable receive equalization
- **3 dB, 6 dB, or 12 dB boost**
- **Compensates over 40 inches of FR4 at 4.25 Gbps**

Adjustable transmit preemphasis/deemphasis
- **Programmable boost and output level**
- **Compensates over 40 inches of FR4 at 4.25 Gbps**

Low power
- **105 mW per channel at 2.5 V (400 mV p-p differential output level swing)**

40 × 40, fully differential, nonblocking array
- **Double rank connection programming with dual maps**

Low jitter, typically <25 ps
Flexible 2.5 V to 3.3 V supply range
DC- or ac-coupled differential PECL/CML inputs
Differential CML outputs
Per-lane polarity inversion for routing ease
50 Ω on-chip I/O termination with disable feature
Supports 8b10b, scrambled or uncoded NRZ data
Serial (I²C slave or SPI) control interface
Parallel control interface

APPLICATIONS

Digital video (HDMI, DVI, DisplayPort, 3G/HD/SD-SDI)
Fiber optic network switching
High speed serial backplane routing to OC-48 with FEC
XAUI, 4x Fibre Channel, Infiniband®, and GbE over backplane
Data storage networks

FUNCTIONAL BLOCK DIAGRAM

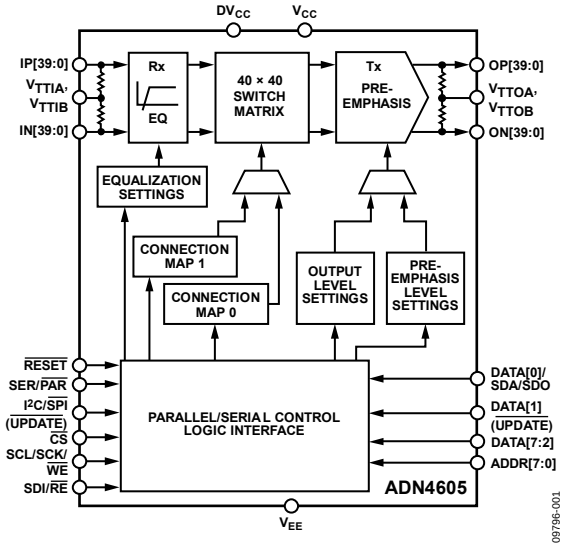

Figure 1.

GENERAL DESCRIPTION

The ADN4605 is a 40 × 40 asynchronous, protocol agnostic, digital crosspoint switch, with 40 differential PECL/CML-compatible inputs and 40 differential programmable CML outputs.

The ADN4605 is optimized for NRZ signaling with data rates of up to 4.25 Gbps per port. Each port offers adjustable levels of input equalization, programmable output swing, and output preemphasis/deemphasis.

The ADN4605 nonblocking switch core implements a 40 × 40 crossbar and supports independent channel switching through serial and parallel control interfaces. The ADN4605 has low latency and very low channel-to-channel skew.

An I²C, SPI, or parallel interface is used to communicate with the device for control of connectivity and other features.

The ADN4605 is assembled in a 35 mm × 35 mm, 352 BGA package and operates over a temperature range of −40°C to +85°C.

Rev. B Document Feedback
Information furnished by Analog Devices is believed to be accurate and reliable. However, no responsibility is assumed by Analog Devices for its use, nor for any infringements of patents or other rights of third parties that may result from its use. Specifications subject to change without notice. No license is granted by implication or otherwise under any patent or patent rights of Analog Devices. Trademarks and registered trademarks are the property of their respective owners.

One Technology Way, P.O. Box 9106, Norwood, MA 02062-9106, U.S.A.
Tel: 781.329.4700 **©2011–2019 Analog Devices, Inc. All rights reserved.**
Technical Support **www.analog.com**

TABLE OF CONTENTS

Features ... 1
Functional Block Diagram ... 1
Applications ... 1
General Description ... 1
Revision History ... 2
Specifications ... 3
  Electrical Specifications ... 3
  I²C Timing Specifications ... 5
  SPI Timing Specifications ... 5
  Parallel Mode Specifications ... 6
Absolute Maximum Ratings ... 7
  Thermal Resistance ... 7
  ESD Caution ... 7
Pin Configuration and Function Descriptions ... 8
Typical Performance Characteristics ... 18
Theory of Operation ... 24
  Introduction ... 24
  Receivers ... 25
  Polarity Inversion ... 26
  Switch Core ... 27
  Reset ... 28
  Transmitters ... 29
  Termination ... 32
I²C Serial Control Interface ... 33
  I²C Data Write ... 33
  I²C Data Read ... 34
SPI Serial Control Interface ... 35
Parallel Control Interface ... 38
  Address Inputs: ADDR[7:0] ... 38
  Data Inputs/Outputs: DATA[7:0] ... 38
  Write Operation ... 38
  Read Operation ... 38
Register Map ... 39
Applications Information ... 49
  Supply Sequencing ... 51
  Power Dissipation ... 51
  Output Compliance ... 51
  TX/XPT HEADROOM ... 51
  PCB Layout Guidelines ... 54
Outline Dimensions ... 55
  Ordering Guide ... 55

REVISION HISTORY

7/2019—Rev. A to Rev. B

Changes to Table 1 ... 4
Changes to Table 6 ... 7
Added Thermal Resistance Section and Table 7; Renumbered Sequentially ... 7
Updated Outline Dimensions ... 55
Change to Ordering Guide ... 55

11/2011—Rev. 0 to Rev. A

Changes to Printed Circuit Board (PCB) Layout Guidelines ... 54
Removed Figure 55, Renumbered Sequentially ... 54

6/2011—Revision 0: Initial Version

SPECIFICATIONS

ELECTRICAL SPECIFICATIONS

V_{CC} = 2.5 V, V_{TTIx} = 2.5 V, V_{TTOx} = 2.5 V, DV_{CC} = 3.3 V, V_{EE} = 0 V, R_L = 50 Ω, output level (OLEV) = 4 (16 mA), preemphasis (PE) = 0 (0 dB), equalizer (EQ) = 1 (3 dB), data rate = 4.25 Gbps (PRBS7 data pattern), ac-coupled inputs and outputs, differential input swing = 800 mV p-p, T_A = 25°C, unless otherwise noted.

Table 1.

Parameter	Conditions	Min	Typ	Max	Unit
DYNAMIC PERFORMANCE					
Data Rate (DR) per Channel (NRZ)		dc		4.25	Gbps
Deterministic Jitter	Data rate ≤ 4.25 Gbps, no channel		20		ps p-p
Random Jitter	RMS, no channel		0.8		ps rms
Residual Deterministic Jitter with Receive Equalization	Data rate = 4.25 Gbps, 20 in. FR4, EQ boost = 12 dB		14		ps p-p
	Data rate = 4.25 Gbps, 30 in. FR4, EQ boost = 12 dB		15		ps p-p
	Data rate = 4.25 Gbps, 40 in. FR4, EQ boost = 12 dB		25		ps p-p
Residual Deterministic Jitter with Transmit Preemphasis	Data rate = 4.25 Gbps, 20 in. FR4, PE boost = 5.6 dB		22		ps p-p
	Data rate = 4.25 Gbps, 30 in. FR4, PE boost = 6.8 dB		28		ps p-p
	Data rate = 4.25 Gbps, 40 in. FR4, PE boost = 9.5 dB		32		ps p-p
Propagation Delay	Input to output		920		ps
Channel-to-Channel Skew	Earliest input/output lane to latest input/output lane		200		ps
Switching Time	Update logic switching to 50% output data		20		ns
Output Rise/Fall Time	20% to 80%		108		ps
INPUT CHARACTERISTICS					
Minimum Differential Input Voltage Swing[1]	$V_{ICM} = V_{CC} - 0.6$ V		50		mV p-p diff
Maximum Differential Input Voltage Swing[1]	$V_{ICM} = V_{CC} - 0.6$ V		2000		mV p-p diff
Input Voltage Range	Single-ended absolute voltage level, V_L	V_{EE} + 1.0			V
	Single-ended absolute voltage level, V_H			V_{CC} + 0.3	V
OUTPUT CHARACTERISTICS					
Output Voltage Swing	Differential, PE boost = 0 dB, default output level, at dc	670	800	875	mV p-p diff
Output Voltage Range	Single-ended absolute voltage level, V_L		V_{CC} − 1.4		V
	Single-ended absolute voltage level, V_H		V_{CC} + 0.3		V
Per-Port Output Current	PE boost = 0 dB, default output level		16		mA
	PE boost = 6 dB, default output level		32		mA
TERMINATION CHARACTERISTICS					
Resistance	Differential, $V_{CC} = V_{MIN}$ to V_{MAX}, $T_A = T_{MIN}$ to T_{MAX}	88	100	114	Ω
Temperature Coefficient			0.015		Ω/°C
POWER SUPPLY					
Operating Range					
V_{CC}	V_{EE} = 0 V	2.25	2.5	3.6	V
DV_{CC}	V_{EE} = 0 V	3.0	3.3	3.6	V
V_{TTIA}, V_{TTIB}	V_{EE} = 0 V		2.5	V_{CC} + 0.3	V
V_{TTOA}, V_{TTOB}	V_{EE} = 0 V		2.5	V_{CC} + 0.3	V
Supply Current	Inputs/outputs disabled (reset condition)				
I_{CC}			55	64	mA
I_{DVCC}			0.3	1.1	mA
I_{TTIA} + I_{TTIB}	Inputs floating		0	1.5	mA
I_{TTOA}+ I_{TTOB}	Outputs floating		0	1.5	mA

Parameter	Conditions	Min	Typ	Max	Unit
Supply Current	All outputs enabled, ac-coupled I/O, 200 mV I/O swings (400 mV p-p differential), PE boost = 0 dB, 50 Ω far-end terminations				
I_{CC}			1320	1410	mA
I_{DVCC}			0.3	1.1	mA
$I_{TTIA} + I_{TTIB}$			11	15	mA
$I_{TTOA} + I_{TTOB}$			335	360	mA
Supply Current	All outputs enabled, ac-coupled I/O, 400 mV I/O swings (800 mV p-p differential), PE boost = 0 dB, 50 Ω far-end terminations				
I_{CC}			1370	1460	mA
I_{DVCC}			0.3	1.1	mA
$I_{TTIA} + I_{TTIB}$			11	15	mA
$I_{TTOA} + I_{TTOB}$			665	715	mA
Supply Current	All outputs enabled, ac-coupled I/O, 400 mV I/O swings (800 mV p-p differential), PE boost = 6 dB, 50 Ω far-end terminations				
I_{CC}			1850	1960	mA
I_{DVCC}			0.3	1.1	mA
$I_{TTIA} + I_{TTIB}$			11	15	mA
$I_{TTOA} + I_{TTOB}$			1340	1380	
LOGIC CHARACTERISTICS					
Input High Voltage Threshold (V_{IH})	DV_{CC} = 3.3 V	0.7 × DV_{CC}			V
Input Low Voltage Threshold (V_{IL})	DV_{CC} = 3.3 V			0.25 × DV_{CC}	V
Output High Voltage (V_{OH})	I_{OH} = −3 mA (I^2C/SPI mode only)	0.75 × DV_{CC}		DV_{CC}	V
Output Low Voltage (V_{OL})	I_{OL} = +3 mA	V_{EE}		0.4	V

[1] V_{ICM} is the input common-mode voltage.

I²C TIMING SPECIFICATIONS

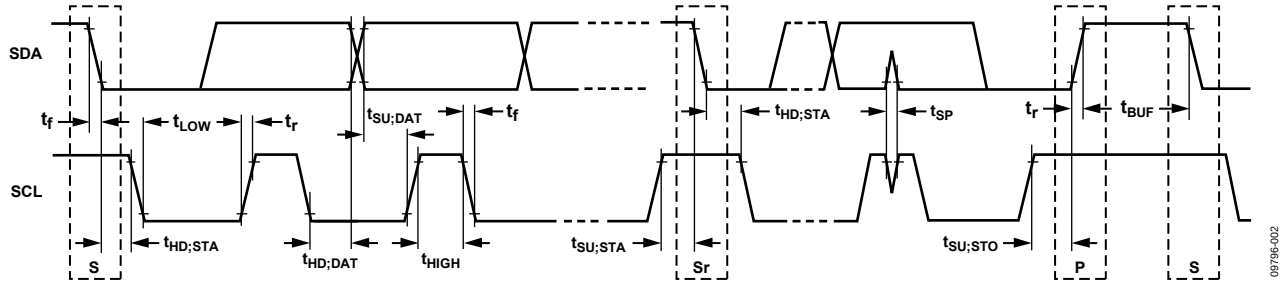

Figure 2. I²C Timing Diagram

Table 2. I²C Timing Specifications

Parameter	Symbol	Min	Max	Unit
SCL Clock Frequency	f_{SCL}	0	500+	kHz
Hold Time for a Start Condition	$t_{HD; STA}$	0.5		µs
Setup Time for a Repeated Start Condition	$t_{SU; STA}$	0.5		µs
Low Period of the SCL Clock	t_{LOW}		1.4	µs
High Period of the SCL Clock	t_{HIGH}	0.6		µs
Data Hold Time	$t_{HD; DAT}$	0.02		µs
Data Setup Time	$t_{SU; DAT}$	0.02		µs
Rise Time for Both SDA and SCL	t_r	1	300	ns
Fall Time for Both SDA and SCL	t_f	1	300	ns
Setup Time for Stop Condition	$t_{SU; STO}$	0.5		µs
Bus Free Time Between a Stop Condition and a Start Condition	t_{BUF}	1		ns
Bus Idle Time After a Reset		20		ns
Reset Pulse Width		20		ns

SPI TIMING SPECIFICATIONS

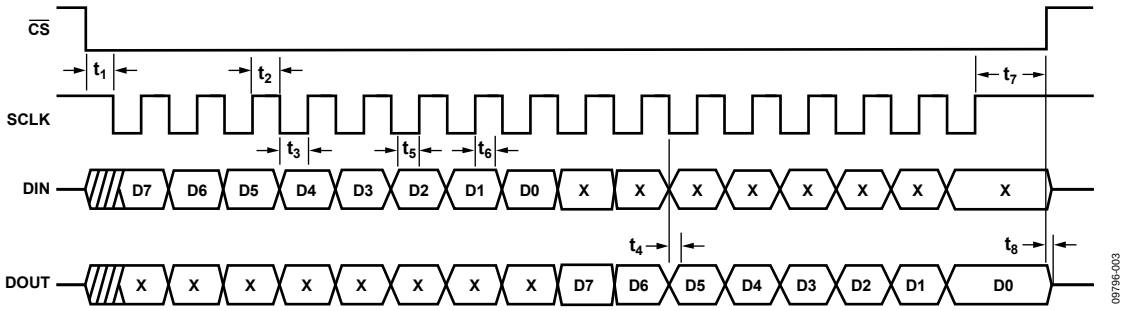

Figure 3. SPI Timing Diagram

Table 3. SPI Timing Specifications

Parameter	Symbol	Min	Max	Unit
SCK Clock Frequency	f_{SCK}		10	MHz
$\overline{CS}$ to SCLK Setup Time	t_1	0		ns
SCLK High Pulse Width	t_2	30		ns
SCLK Low Pulse Width	t_3	30		ns
Data Access Time After SCLK Falling Edge	t_4		45	ns
Data Setup Time Prior to SCLK Rising Edge	t_5	10		ns
Data Hold Time After SCLK Rising Edge	t_6	30		ns
$\overline{CS}$ to SCLK Hold Time	t_7	0		ns
$\overline{CS}$ to SDO High Impedance	t_8		45	ns
Reset Pulse Width		20		ns

PARALLEL MODE SPECIFICATIONS

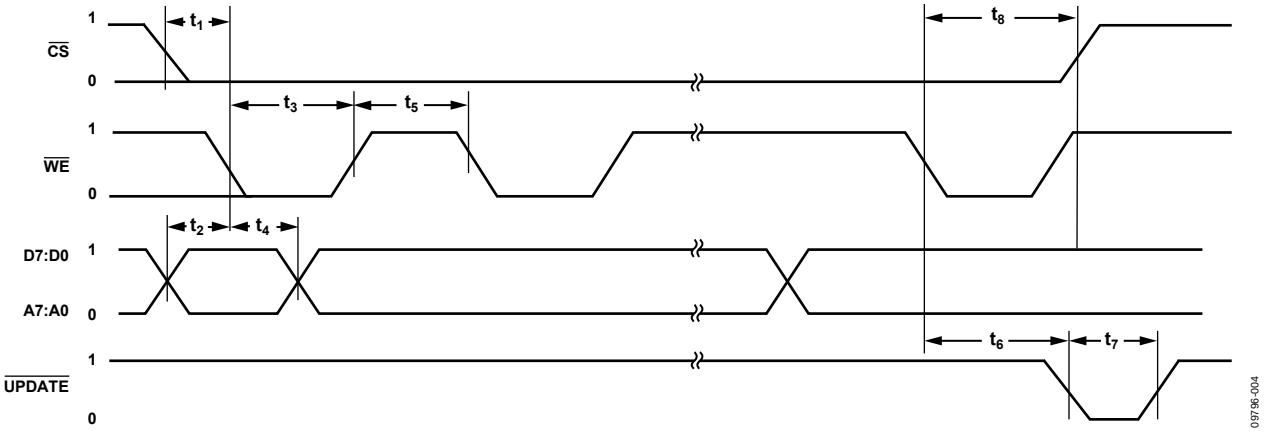

Figure 4. Parallel Mode Write Cycle

Table 4. Parallel Mode Write Cycle Timing Specifications

Parameter	Symbol	Limit Min	Limit Typ	Limit Max	Unit
Chip Select Setup Time	t_1	0			ns
Parallel Data Setup Time	t_2	0			ns
$\overline{WE}$ Pulse Width	t_3	30	50		ns
Parallel Data Hold Time	t_4	25			ns
$\overline{WE}$ Pulse Separation	t_5		25		ns
$\overline{WE}$ to $\overline{UPDATE}$ Delay	t_6		40		ns
$\overline{UPDATE}$ Pulse Width	t_7	30			ns
Chip Select Hold Time	t_8	0			ns
Reset Pulse Width		20			ns

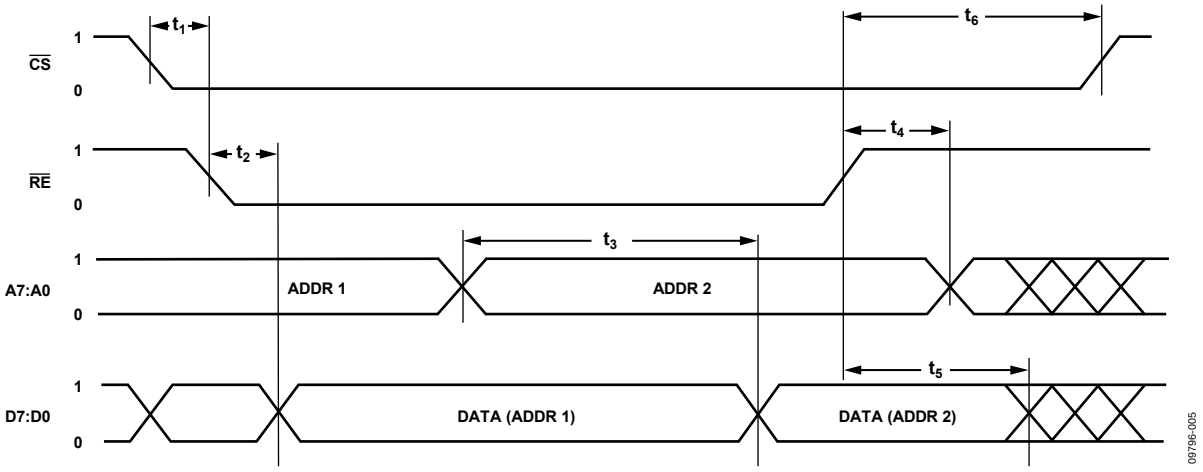

Figure 5. Parallel Mode Read Cycle

Table 5. Parallel Mode Read Cycle Timing Specifications

Parameter	Symbol	Limit Min	Limit Typ	Limit Max	Unit
Chip Select Setup Time	t_1	0			ns
Parallel $\overline{RE}$ Setup to Valid Time	t_2	10			ns
Data Access Time	t_3	25	50		ns
Address to $\overline{RE}$ Hold Time	t_4	25			ns
Data to $\overline{RE}$ Hold Time	t_5	25			ns
Chip Select Hold Time	t_6	5			ns

ABSOLUTE MAXIMUM RATINGS

Table 6.

Parameter	Rating
V_{CC} to V_{EE}	3.7 V
DV_{CC} to V_{EE}	3.7 V
V_{TTIA}, V_{TTIB}	V_{CC} + 0.6 V
V_{TTOA}, V_{TTOB}	V_{CC} + 0.6 V
Internal Power Dissipation[1]	11.5 W
Differential Input Voltage	2.0 V
Logic Input Voltage	V_{EE} − 0.3 V < V_{IN} < V_{CC} + 0.6 V
Storage Temperature Range	−65°C to +125°C
Junction Temperature	125°C

[1] The internal power dissipation is for the device in free air. T_A = 25°C and θ_{JA} = 8.5°C/W in still air.

Stresses at or above those listed under Absolute Maximum Ratings may cause permanent damage to the product. This is a stress rating only; functional operation of the product at these or any other conditions above those indicated in the operational section of this specification is not implied. Operation beyond the maximum operating conditions for extended periods may affect product reliability.

THERMAL RESISTANCE

Thermal resistance values specified in Table 7 are simulated based on JEDEC specs (unless specified otherwise) and must be used in compliance with JESD51-12. Using enhanced heat removal (printed circuit board (PCB), heat sink, or airflow) technique improves thermal resistance values.

Table 7. Thermal Resistance Values

Package Type	θ_{JA} (°C/W)	θ_{JC_TOP}[1] (°C/W)	Ψ_{JT} (°C/W)	Ψ_{JB} (°C/W)
BP-352-2	8.5	0.3	0.2	2.4

[1] For the θ_{JC_TOP} test, 100 µm thermal insulation material (TIM) is used. The TIM is assumed to have 3.6 W/m K.

ESD CAUTION

ESD (electrostatic discharge) sensitive device. Charged devices and circuit boards can discharge without detection. Although this product features patented or proprietary protection circuitry, damage may occur on devices subjected to high energy ESD. Therefore, proper ESD precautions should be taken to avoid performance degradation or loss of functionality.

PIN CONFIGURATION AND FUNCTION DESCRIPTIONS

	1	2	3	4	5	6	7	8	9	10	11	12	13	14	15	16	17	18	19	20	21	22	23	24	25	26	
A	V_{EE}	V_{EE}	V_{EE}	ON39	OP39	ON37	OP37	ON35	OP35	ON33	OP33	ON31	OP31	ON29	OP29	ON27	OP27	ON25	OP25	ON23	OP23	ON21	OP21	V_{EE}	V_{EE}	V_{EE}	A
B	V_{EE}	V_{EE}	V_{EE}	V_{EE}	ON38	OP38	ON36	OP36	ON34	OP34	ON32	OP32	ON30	OP30	ON28	OP28	ON26	OP26	ON24	OP24	ON22	OP22	ON20	OP20	V_{EE}	V_{EE}	B
C	V_{EE}	IP0	V_{EE}	V_{CC}	V_{CC}	V_{CC}	V_{TTOB}	V_{TTOB}	V_{TTOB}	V_{TTOB}	V_{CC}	V_{CC}	V_{TTOB}	V_{TTOB}	V_{TTOB}	V_{CC}	V_{CC}	V_{TTOB}	V_{TTOB}	V_{TTOB}	V_{TTOB}	V_{CC}	V_{CC}	DV_{CC}	V_{EE}	V_{EE}	C
D	IP1	IN0	V_{CC}	DV_{CC}	V_{CC}	V_{CC}	V_{EE}	V_{EE}	V_{EE}	V_{EE}	V_{CC}	V_{CC}	V_{EE}	V_{EE}	V_{EE}	V_{CC}	V_{CC}	V_{EE}	V_{EE}	V_{EE}	V_{EE}	V_{CC}	DV_{CC}	V_{CC}	V_{EE}	IN39	D
E	IN1	IP2	V_{CC}	V_{EE}																			V_{EE}	V_{CC}	IN38	IP39	E
F	IP3	IN2	V_{TTIA}	V_{EE}																			V_{EE}	V_{TTIB}	IP38	IN37	F
G	IN3	IP4	V_{TTIA}	V_{EE}																			V_{EE}	V_{TTIB}	IN36	IP37	G
H	IP5	IN4	V_{TTIA}	V_{EE}																			$\overline{WE}$	V_{TTIB}	IP36	IN35	H
J	IN5	IP6	V_{TTIA}	$I^2C/\overline{SPI}$																			$\overline{RE}$	V_{TTIB}	IN34	IP35	J
K	IP7	IN6	V_{CC}	$SER/\overline{PAR}$																			$\overline{CS}$	V_{CC}	IP34	IN33	K
L	IN7	IP8	V_{CC}	$\overline{RESET}$																			DATA0	V_{CC}	IN32	IP33	L
M	IP9	IN8	V_{TTIA}	ADDR0																			DATA1	V_{TTIB}	IP32	IN31	M
N	IN9	IP10	V_{TTIA}	ADDR1																			DATA2	V_{TTIB}	IN30	IP31	N
P	IP11	IN10	V_{TTIA}	ADDR2																			DATA3	V_{TTIB}	IP30	IN29	P
R	IN11	IP12	V_{CC}	ADDR3																			DATA4	V_{CC}	IN28	IP29	R
T	IP13	IN12	V_{CC}	ADDR4																			DATA5	V_{CC}	IP28	IN27	T
U	IN13	IP14	V_{TTIA}	ADDR5																			DATA6	V_{TTIB}	IN26	IP27	U
V	IP15	IN14	V_{TTIA}	ADDR6																			DATA7	V_{TTIB}	IP26	IN25	V
W	IN15	IP16	V_{TTIA}	ADDR7																			V_{EE}	V_{TTIB}	IN24	IP25	W
Y	IP17	IN16	V_{TTIA}	V_{EE}																			V_{EE}	V_{TTIB}	IP24	IN23	Y
AA	IN17	IP18	V_{CC}	V_{EE}																			V_{EE}	V_{CC}	IN22	IP23	AA
AB	IP19	IN18	V_{CC}	V_{EE}																			V_{EE}	V_{CC}	IP22	IN21	AB
AC	IN19	V_{EE}	V_{CC}	DV_{CC}	V_{CC}	V_{CC}	V_{EE}	V_{EE}	V_{EE}	V_{EE}	V_{CC}	V_{CC}	V_{EE}	V_{EE}	V_{EE}	V_{CC}	V_{CC}	V_{EE}	V_{EE}	V_{EE}	V_{EE}	V_{CC}	DV_{CC}	V_{CC}	IN20	IP21	AC
AD	V_{EE}	V_{EE}	V_{EE}	V_{CC}	V_{CC}	V_{CC}	V_{TTOA}	V_{TTOA}	V_{TTOA}	V_{TTOA}	V_{CC}	V_{CC}	V_{TTOA}	V_{TTOA}	V_{TTOA}	V_{CC}	V_{CC}	V_{TTOA}	V_{TTOA}	V_{TTOA}	V_{TTOA}	V_{CC}	V_{CC}	V_{EE}	IP20	V_{EE}	AD
AE	V_{EE}	V_{EE}	OP0	ON0	OP2	ON2	OP4	ON4	OP6	ON6	OP8	ON8	OP10	ON10	OP12	ON12	OP14	ON14	OP16	ON16	OP18	ON18	V_{EE}	V_{EE}	V_{EE}	V_{EE}	AE
AF	V_{EE}	V_{EE}	V_{EE}	OP1	ON1	OP3	ON3	OP5	ON5	OP7	ON7	OP9	ON9	OP11	ON11	OP13	ON13	OP15	ON15	OP17	ON17	OP19	ON19	V_{EE}	V_{EE}	V_{EE}	AF
	1	2	3	4	5	6	7	8	9	10	11	12	13	14	15	16	17	18	19	20	21	22	23	24	25	26	

ADN4605
Top View

09796-006

Figure 6. Pin Configuration

Table 8. Pin Function Descriptions

Pin No.	Mnemonic	Type	Description
A1	V_{EE}	Power	Negative Supply.
A2	V_{EE}	Power	Negative Supply.
A3	V_{EE}	Power	Negative Supply.
A4	ON39	Output	High Speed Output Complement.
A5	OP39	Output	High Speed Output.
A6	ON37	Output	High Speed Output Complement.
A7	OP37	Output	High Speed Output.
A8	ON35	Output	High Speed Output Complement.
A9	OP35	Output	High Speed Output.
A10	ON33	Output	High Speed Output Complement.
A11	OP33	Output	High Speed Output.
A12	ON31	Output	High Speed Output Complement.
A13	OP31	Output	High Speed Output.
A14	ON29	Output	High Speed Output Complement.
A15	OP29	Output	High Speed Output.
A16	ON27	Output	High Speed Output Complement.
A17	OP27	Output	High Speed Output.
A18	ON25	Output	High Speed Output Complement.
A19	OP25	Output	High Speed Output.
A20	ON23	Output	High Speed Output Complement.
A21	OP23	Output	High Speed Output.
A22	ON21	Output	High Speed Output Complement.
A23	OP21	Output	High Speed Output.
A24	V_{EE}	Power	Negative Supply.
A25	V_{EE}	Power	Negative Supply.
A26	V_{EE}	Power	Negative Supply.
B1	V_{EE}	Power	Negative Supply.
B2	V_{EE}	Power	Negative Supply.
B3	V_{EE}	Power	Negative Supply.
B4	V_{EE}	Power	Negative Supply.
B5	ON38	Output	High Speed Output Complement.
B6	OP38	Output	High Speed Output.
B7	ON36	Output	High Speed Output Complement.
B8	OP36	Output	High Speed Output.
B9	ON34	Output	High Speed Output Complement.
B10	OP34	Output	High Speed Output.
B11	ON32	Output	High Speed Output Complement.
B12	OP32	Output	High Speed Output.
B13	ON30	Output	High Speed Output Complement.
B14	OP30	Output	High Speed Output.
B15	ON28	Output	High Speed Output Complement.
B16	OP28	Output	High Speed Output.
B17	ON26	Output	High Speed Output Complement.
B18	OP26	Output	High Speed Output.
B19	ON24	Output	High Speed Output Complement.
B20	OP24	Output	High Speed Output.
B21	ON22	Output	High Speed Output Complement.
B22	OP22	Output	High Speed Output.

Pin No.	Mnemonic	Type	Description
B23	ON20	Output	High Speed Output Complement.
B24	OP20	Output	High Speed Output.
B25	V_{EE}	Power	Negative Supply.
B26	V_{EE}	Power	Negative Supply.
C1	V_{EE}	Power	Negative Supply.
C2	IP0	Input	High Speed Input.
C3	V_{EE}	Power	Negative Supply.
C4	V_{CC}	Power	Positive Supply.
C5	V_{CC}	Power	Positive Supply.
C6	V_{CC}	Power	Positive Supply.
C7	V_{TTOB}	Power	Output Termination Supply (B). The V_{TTOB} pins are normally tied to the V_{TTOA} pins.
C8	V_{TTOB}	Power	Output Termination Supply (B). The V_{TTOB} pins are normally tied to the V_{TTOA} pins.
C9	V_{TTOB}	Power	Output Termination Supply (B). T The V_{TTOB} pins are normally tied to the V_{TTOA} pins.
C10	V_{TTOB}	Power	Output Termination Supply (B). The V_{TTOB} pins are normally tied to the V_{TTOA} pins.
C11	V_{CC}	Power	Positive Supply.
C12	V_{CC}	Power	Positive Supply.
C13	V_{TTOB}	Power	Output Termination Supply (B). The V_{TTOB} pins are normally tied to the V_{TTOA} pins.
C14	V_{TTOB}	Power	Output Termination Supply (B). The V_{TTOB} pins are normally tied to the V_{TTOA} pins.
C15	V_{TTOB}	Power	Output Termination Supply (B). The V_{TTOB} pins are normally tied to the V_{TTOA} pins.
C16	V_{CC}	Power	Positive Supply.
C17	V_{CC}	Power	Positive Supply.
C18	V_{TTOB}	Power	Output Termination Supply (B). The V_{TTOB} pins are normally tied to the V_{TTOA} pins.
C19	V_{TTOB}	Power	Output Termination Supply (B). The V_{TTOB} pins are normally tied to the V_{TTOA} pins.
C20	V_{TTOB}	Power	Output Termination Supply (B). The V_{TTOB} pins are normally tied to the V_{TTOA} pins.
C21	V_{TTOB}	Power	Output Termination Supply (B). The V_{TTOB} pins are normally tied to the V_{TTOA} pins.
C22	V_{CC}	Power	Positive Supply.
C23	V_{CC}	Power	Positive Supply.
C24	DV_{CC}	Power	Digital Positive Supply.
C25	V_{EE}	Power	Negative Supply.
C26	V_{EE}	Power	Negative Supply.
D1	IP1	Input	High Speed Input.
D2	IN0	Input	High Speed Input Complement.
D3	V_{CC}	Power	Positive Supply.
D4	DV_{CC}	Power	Digital Positive Supply.
D5	V_{CC}	Power	Positive Supply.
D6	V_{CC}	Power	Positive Supply.
D7	V_{EE}	Power	Negative Supply.
D8	V_{EE}	Power	Negative Supply.
D9	V_{EE}	Power	Negative Supply.
D10	V_{EE}	Power	Negative Supply.
D11	V_{CC}	Power	Positive Supply.
D12	V_{CC}	Power	Positive Supply.

Pin No.	Mnemonic	Type	Description
D13	V_{EE}	Power	Negative Supply.
D14	V_{EE}	Power	Negative Supply.
D15	V_{EE}	Power	Negative Supply.
D16	V_{CC}	Power	Positive Supply.
D17	V_{CC}	Power	Positive Supply.
D18	V_{EE}	Power	Negative Supply.
D19	V_{EE}	Power	Negative Supply.
D20	V_{EE}	Power	Negative Supply.
D21	V_{EE}	Power	Negative Supply.
D22	V_{CC}	Power	Positive Supply.
D23	DV_{CC}	Power	Digital Positive Supply.
D24	V_{CC}	Power	Positive Supply.
D25	V_{EE}	Power	Negative Supply.
D26	IN39	Input	High Speed Input Complement.
E1	IN1	Input	High Speed Input Complement.
E2	IP2	Input	High Speed Input.
E3	V_{CC}	Power	Positive Supply.
E4	V_{EE}	Power	Negative Supply.
E23	V_{EE}	Power	Negative Supply.
E24	V_{CC}	Power	Positive Supply.
E25	IN38	Input	High Speed Input Complement.
E26	IP39	Input	High Speed Input
F1	IP3	Input	High Speed Input
F2	IN2	Input	High Speed Input Complement.
F3	V_{TTIA}	Power	Input Termination Supply (A). The V_{TTIA} pins are normally tied to the V_{TTIB} pins.
F4	V_{EE}	Power	Negative Supply.
F23	V_{EE}	Power	Negative Supply.
F24	V_{TTIB}	Power	Input Termination Supply (B). The V_{TTIB} pins are normally tied to the V_{TTIA} pins.
F25	IP38	Input	High Speed Input.
F26	IN37	Input	High Speed Input Complement.
G1	IN3	Input	High Speed Input Complement.
G2	IP4	Input	High Speed Input.
G3	V_{TTIA}	Power	Input Termination Supply (A). The V_{TTIA} pins are normally tied to the V_{TTIB} pins.
G4	V_{EE}	Power	Negative Supply.
G23	V_{EE}	Power	Negative Supply.
G24	V_{TTIB}	Power	Input Termination Supply (B). The V_{TTIB} pins are normally tied to the V_{TTIA} pins.
G25	IN36	Input	High Speed Input Complement.
G26	IP37	Input	High Speed Input.
H1	IP5	Input	High Speed Input.
H2	IN4	Input	High Speed Input Complement.
H3	V_{TTIA}	Power	Input Termination Supply (A). The V_{TTIA} pins are normally tied to the V_{TTIB} pins.
H4	V_{EE}	Power	Negative Supply.
H23	$\overline{WE}$/SCL/SCK	Control	Parallel control interface: First-Rank Write Strobe ($\overline{WE}$) Active Low. I^2C Control Interface: I^2C Clock (SCL). SPI Control Interface: SPI Clock (SCK).
H24	V_{TTIB}	Power	Input Termination Supply (B). The V_{TTIB} pins are normally tied to the V_{TTIA} pins.

Pin No.	Mnemonic	Type	Description
H25	IP36	Input	High Speed Input.
H26	IN35	Input	High Speed Input Complement.
J1	IN5	Input	High Speed Input Complement.
J2	IP6	Input	High Speed Input.
J3	V_{TTIA}	Power	Input Termination Supply (A). The V_{TTIA} pins are normally tied to the V_{TTIB} pins.
J4	$I^2C/\overline{SPI}/\overline{UPDATE}$	Control	I^2C Control Interface Selection (I^2C). SPI Control Interface Selection ($\overline{SPI}$) Active Low. Parallel Control Interface ($\overline{UPDATE}$) Active Low.
J23	$\overline{RE}$/SDI	Control	Parallel Control Interface: Read Strobe ($\overline{RE}$) Active Low. SPI Control Interface: Data Input (SDI) SPI Control.
J24	V_{TTIB}	Power	Input Termination Supply (B). The V_{TTIB} pins are normally tied to the V_{TTIA} pins.
J25	IN34	Input	High Speed Input.
J26	IP35	Input	High Speed Input Complement.
K1	IP7	Input	High Speed Input.
K2	IN6	Input	High Speed Input Complement.
K3	V_{CC}	Power	Power Supply.
K4	SER/$\overline{PAR}$	Control	Serial Control Interface Selection (SER). Parallel Control Interface Selection ($\overline{PAR}$) Active Low.
K23	$\overline{CS}$	Control	Chip Select Active Low.
K24	V_{CC}	Power	Positive Supply.
K25	IP34	Input	High Speed Input.
K26	IN33	Input	High Speed Input Complement.
L1	IN7	Input	High Speed Input Complement.
L2	IP8	Input	High Speed Input.
L3	V_{CC}	Power	Positive Supply.
L4	$\overline{RESET}$	Control	Configuration Registers: Reset (Active Low). This pin is normally pulled up to DV_{CC}.
L23	DATA0/SDA/SDO	Control	Parallel Control Interface: Register Data Bit 0 (DATA0). I^2C Control Interface: Data In (SDA). SPI Control Interface: Data Out (SDO).
L24	V_{CC}	Power	Positive Supply.
L25	IN32	Input	High Speed Input Complement.
L26	IP33	Input	High Speed Input.
M1	IP9	Input	High Speed Input.
M2	IN8	Input	High Speed Input Complement.
M3	V_{TTIA}	Power	Input Termination Supply (A). The V_{TTIA} pins are normally tied to the V_{TTIB} pins.
M4	ADDR0	Control	Parallel Control Interface: Register Address Bit 0. I^2C Control Interface: Slave Address Bit 0.
M23	DATA1/$\overline{UPDATE}$	Control	Parallel Control Interface: Register (DATA1). Data Bit 1. I^2C or SPI Serial Control Interface ($\overline{UPDATE}$). Active Low.
M24	V_{TTIB}	Power	Input Termination Supply (B). The V_{TTIB} pins are normally tied to the V_{TTIA} pins.
M25	IP32	Input	High Speed Input
M26	IN31	Input	High Speed Input Complement.
N1	IN9	Input	High Speed Input Complement.
N2	IP10	Input	High Speed Input.
N3	V_{TTIA}	Power	Input Termination Supply (A). The V_{TTIA} pins are normally tied to the V_{TTIB} pins.
N4	ADDR1	Control	Parallel Control Interface: Register Address Bit 1. I^2C Control Interface: Slave Address Bit 1.

Pin No.	Mnemonic	Type	Description
N23	DATA2	Control	Parallel Control Interface: Register Data Bit 2.
N24	V_{TTIB}	Power	Input Termination Supply (B). The V_{TTIB} pins are normally tied to the V_{TTIA} pins.
N25	IN30	Input	High Speed Input Complement.
N26	IP31	Input	High Speed Input.
P1	IP11	Input	High Speed Input.
P2	IN10	Input	High Speed Input Complement.
P3	V_{TTIA}	Power	Input Termination Supply (A). The V_{TTIA} pins are normally tied to the V_{TTIB} pins.
P4	ADDR2	Control	Parallel Control Interface: Register Address Bit 2. I^2C Control Interface: Slave Address Bit 2.
P23	DATA3	Control	Parallel Control Interface: Register Data Bit 3.
P24	V_{TTIB}	Power	Input Termination Supply (B). The V_{TTIB} pins are normally tied to the V_{TTIA} pins.
P25	IP30	Input	High Speed Input.
P26	IN29	Input	High Speed Input Complement.
R1	IN11	Input	High Speed Input Complement.
R2	IP12	Input	High Speed Input.
R3	V_{CC}	Power	Positive Supply.
R4	ADDR3	Control	Parallel Control Interface: Register Address Bit 3. I^2C Control Interface: Slave Address Bit 3.
R23	DATA4	Control	Parallel Control Interface: Register Data Bit 4.
R24	V_{CC}	Power	Positive Supply.
R25	IN28	Input	High Speed Input Complement.
R26	IP29	Input	High Speed Input.
T1	IP13	Input	High Speed Input.
T2	IN12	Input	High Speed Input Complement.
T3	V_{CC}	Power	Positive Supply.
T4	ADDR4	Control	Parallel Control Interface: Register Address Bit 4. I^2C Control Interface: Slave Address Bit 4.
T23	DATA5	Control	Parallel Control Interface: Register Data Bit 5.
T24	V_{CC}	Power	Positive Supply.
T25	IP28	Input	High Speed Input.
T26	IN27	Input	High Speed Input Complement.
U1	IN13	Input	High Speed Input Complement.
U2	IP14	Input	High Speed Input.
U3	V_{TTIA}	Power	Input Termination Supply (A). The V_{TTIA} pins are normally tied to the V_{TTIB} pins.
U4	ADDR5	Control	Parallel Control Interface: Register Address Bit 5. I^2C Control Interface: Slave Address Bit 5.
U23	DATA6	Control	Parallel Control Interface: Register Data Bit 6.
U24	V_{TTIB}	Power	Input Termination Supply (B). The V_{TTIB} pins are normally tied to the V_{TTIA} pins.
U25	IN26	Input	High Speed Input Complement.
U26	IP27	Input	High Speed Input.
V1	IP15	Input	High Speed Input.
V2	IN14	Input	High Speed Input Complement.
V3	V_{TTIA}	Power	Input Termination Supply (A). The V_{TTIA} pins are normally tied to the V_{TTIB} pins.
V4	ADDR6	Control	Parallel Control Interface: Register Address Bit 6. I^2C Control Interface: Slave Address Bit 6.
V23	DATA7	Control	Parallel Control Interface: Register Data Bit 7.

Pin No.	Mnemonic	Type	Description
V24	V_{TTIB}	Power	Input Termination Supply (B). The V_{TTIB} pins are normally tied to the V_{TTIA} pins.
V25	IP26	Input	High Speed Input.
V26	IN25	Input	High Speed Input Complement.
W1	IN15	Input	High Speed Input Complement.
W2	IP16	Input	High Speed Input.
W3	V_{TTIA}	Power	Input Termination Supply (A). The V_{TTIA} pins are normally tied to the V_{TTIB} pins.
W4	ADDR7	Control	Parallel Control Interface: Register Address Bit 7. I^2C Control Interface: Slave Address Bit 7.
W23	V_{EE}	Power	Negative Supply.
W24	V_{TTIB}	Power	Input Termination Supply (B). The V_{TTIB} pins are normally tied to the V_{TTIA} pins.
W25	IN24	Input	High Speed Input Complement.
W26	IP25	Input	High Speed Input.
Y1	IP17	Input	High Speed Input.
Y2	IN16	Input	High Speed Input Complement.
Y3	V_{TTIA}	Power	Input Termination Supply (A). The V_{TTIA} pins are normally tied to the V_{TTIB} pins.
Y4	V_{EE}	Power	Negative Supply.
Y23	V_{EE}	Power	Negative Supply.
Y24	V_{TTIB}	Power	Input Termination Supply (B). The V_{TTOB} pins are normally tied to the V_{TTIA} pins.
Y25	IP24	Input	High Speed Input.
Y26	IN23	Input	High Speed Input Complement.
AA1	IN17	Input	High Speed Input Complement.
AA2	IP18	Input	High Speed Input.
AA3	V_{CC}	Power	Positive Supply.
AA4	V_{EE}	Power	Negative Supply.
AA23	V_{EE}	Power	Negative Supply.
AA24	V_{CC}	Power	Positive Supply.
AA25	IN22	Input	High Speed Input Complement.
AA26	IP23	Input	High Speed Input.
AB1	IP19	Input	High Speed Input.
AB2	IN18	Input	High Speed Input Complement.
AB3	V_{CC}	Power	Positive Supply.
AB4	V_{EE}	Power	Negative Supply.
AB23	V_{EE}	Power	Negative Supply.
AB24	V_{CC}	Power	Positive Supply.
AB25	IP22	Input	High Speed Input.
AB26	IN21	Input	High Speed Input Complement.
AC1	IN19	Input	High Speed Input Complement.
AC2	V_{EE}	Power	Negative Supply.
AC3	V_{CC}	Power	Positive Supply.
AC4	DV_{CC}	Power	Digital Positive Supply.
AC5	V_{CC}	Power	Positive Supply.
AC6	V_{CC}	Power	Positive Supply.
AC7	V_{EE}	Power	Negative Supply.
AC8	V_{EE}	Power	Negative Supply.
AC9	V_{EE}	Power	Negative Supply.
AC10	V_{EE}	Power	Negative Supply.

Pin No.	Mnemonic	Type	Description
AC11	V_{CC}	Power	Positive Supply.
AC12	V_{CC}	Power	Positive Supply.
AC13	V_{EE}	Power	Negative Supply.
AC14	V_{EE}	Power	Negative Supply.
AC15	V_{EE}	Power	Negative Supply.
AC16	V_{CC}	Power	Positive Supply.
AC17	V_{CC}	Power	Positive Supply.
AC18	V_{EE}	Power	Negative Supply.
AC19	V_{EE}	Power	Negative Supply.
AC20	V_{EE}	Power	Negative Supply.
AC21	V_{EE}	Power	Negative Supply.
AC22	V_{CC}	Power	Positive Supply.
AC23	DV_{CC}	Power	Digital Positive Supply.
AC24	V_{CC}	Power	Positive Supply.
AC25	IN20	Input	High Speed Input Complement.
AC26	IP21	Input	High Speed Input.
AD1	V_{EE}	Power	Negative Supply.
AD2	V_{EE}	Power	Negative Supply.
AD3	V_{EE}	Power	Negative Supply.
AD4	V_{CC}	Power	Positive Supply.
AD5	V_{CC}	Power	Positive Supply.
AD6	V_{CC}	Power	Positive Supply.
AD7	V_{TTOA}	Power	Output Termination Supply (A). The V_{TTOA} pins are normally tied to the V_{TTOB} pins.
AD8	V_{TTOA}	Power	Output Termination Supply (A). The V_{TTOA} pins are normally tied to the V_{TTOB} pins.
AD9	V_{TTOA}	Power	Output Termination Supply (A). The V_{TTOA} pins are normally tied to the V_{TTOB} pins.
AD10	V_{TTOA}	Power	Output Termination Supply (A). The V_{TTOA} pins are normally tied to the V_{TTOB} pins.
AD11	V_{CC}	Power	Positive Supply.
AD12	V_{CC}	Power	Positive Supply.
AD13	V_{TTOA}	Power	Output Termination Supply (A). The V_{TTOA} pins are normally tied to the V_{TTOB} pins.
AD14	V_{TTOA}	Power	Output Termination Supply (A). The V_{TTOA} pins are normally tied to the V_{TTOB} pins.
AD15	V_{TTOA}	Power	Output Termination Supply (A). The V_{TTOA} pins are normally tied to the V_{TTOB} pins.
AD16	V_{CC}	Power	Positive Supply.
AD17	V_{CC}	Power	Positive Supply.
AD18	V_{TTOA}	Power	Output Termination Supply (A). The V_{TTOA} pins are normally tied to the V_{TTOB} pins.
AD19	V_{TTOA}	Power	Output Termination Supply (A). The V_{TTOA} pins are normally tied to the V_{TTOB} pins.
AD20	V_{TTOA}	Power	Output Termination Supply (A). The V_{TTOA} pins are normally tied to the V_{TTOB} pins.
AD21	V_{TTOA}	Power	Output Termination Supply (A). The V_{TTOA} pins are normally tied to the V_{TTOB} pins.
AD22	V_{CC}	Power	Positive Supply.
AD23	V_{CC}	Power	Positive Supply.
AD24	V_{EE}	Power	Negative Supply.
AD25	IP20	Input	High Speed Input.
AD26	V_{EE}	Power	Negative Supply.

Pin No.	Mnemonic	Type	Description
AE1	V_{EE}	Power	Negative Supply.
AE2	V_{EE}	Power	Negative Supply.
AE3	OP0	Output	High Speed Output.
AE4	ON0	Output	High Speed Output Complement.
AE5	OP2	Output	High Speed Output.
AE6	ON2	Output	High Speed Output Complement.
AE7	OP4	Output	High Speed Output.
AE8	ON4	Output	High Speed Output Complement.
AE9	OP6	Output	High Speed Output.
AE10	ON6	Output	High Speed Output Complement.
AE11	OP8	Output	High Speed Output.
AE12	ON8	Output	High Speed Output Complement.
AE13	OP10	Output	High Speed Output.
AE14	ON10	Output	High Speed Output Complement.
AE15	OP12	Output	High Speed Output.
AE16	ON12	Output	High Speed Output Complement.
AE17	OP14	Output	High Speed Output.
AE18	ON14	Output	High Speed Output Complement.
AE19	OP16	Output	High Speed Output.
AE20	ON16	Output	High Speed Output Complement.
AE21	OP18	Output	High Speed Output.
AE22	ON18	Output	High Speed Output Complement.
AE23	V_{EE}	Power	Negative Supply.
AE24	V_{EE}	Power	Negative Supply.
AE25	V_{EE}	Power	Negative Supply.
AE26	V_{EE}	Power	Negative Supply.
AF1	V_{EE}	Power	Negative Supply.
AF2	V_{EE}	Power	Negative Supply.
AF3	V_{EE}	Power	Negative Supply.
AF4	OP1	Output	High Speed Output.
AF5	ON1	Output	High Speed Output Complement.
AF6	OP3	Output	High Speed Output.
AF7	ON3	Output	High Speed Output Complement.
AF8	OP5	Output	High Speed Output.
AF9	ON5	Output	High Speed Output Complement.
AF10	OP7	Output	High Speed Output.
AF11	ON7	Output	High Speed Output Complement.
AF12	OP9	Output	High Speed Output.
AF13	ON9	Output	High Speed Output Complement.
AF14	OP11	Output	High Speed Output.
AF15	ON11	Output	High Speed Output Complement.
AF16	OP13	Output	High Speed Output.
AF17	ON13	Output	High Speed Output Complement.
AF18	OP15	Output	High Speed Output.
AF19	ON15	Output	High Speed Output Complement.
AF20	OP17	Output	High Speed Output.
AF21	ON17	Output	High Speed Output Complement.
AF22	OP19	Output	High Speed Output.

Pin No.	Mnemonic	Type	Description
AF23	ON19	Output	High Speed Output Complement.
AF24	V_{EE}	Power	Negative Supply.
AF25	V_{EE}	Power	Negative Supply.
AF26	V_{EE}	Power	Negative Supply.

TYPICAL PERFORMANCE CHARACTERISTICS

V_{CC} = 2.5 V, V_{TTIx} = 2.5 V, V_{TTOx} = 2.5 V, DV_{CC} = 3.3 V, V_{EE} = 0 V, R_L = 50 Ω, output level (OLEV) = 4 (16 mA), preemphasis (PE) = 0 (0 dB), equalizer (EQ) = 1 (3 dB), data rate = 4.25 Gbps (PRBS7 data pattern), ac-coupled inputs and outputs, differential input swing = 800 mV p-p, T_A = 25°C, unless otherwise noted.

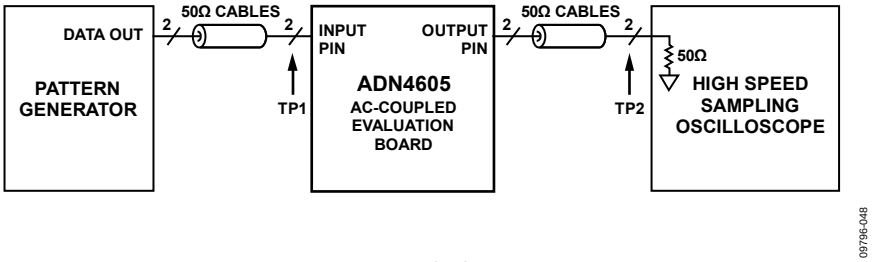

Figure 7. Standard Test Circuit

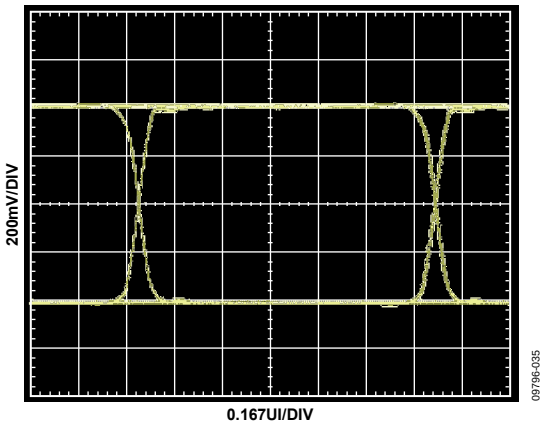

Figure 8. 3.25 Gbps Input Eye (TP1 from Figure 7)

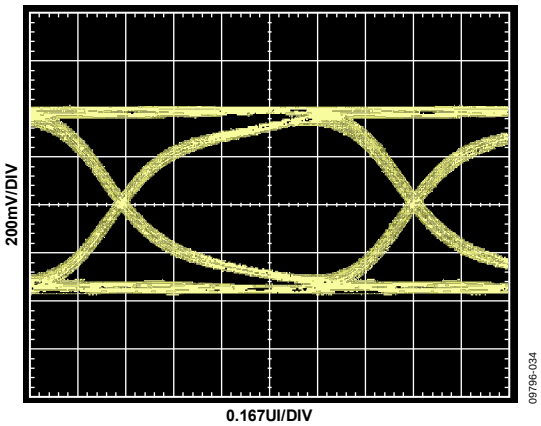

Figure 10. 3.25 Gbps Output Eye (TP2 from Figure 7)

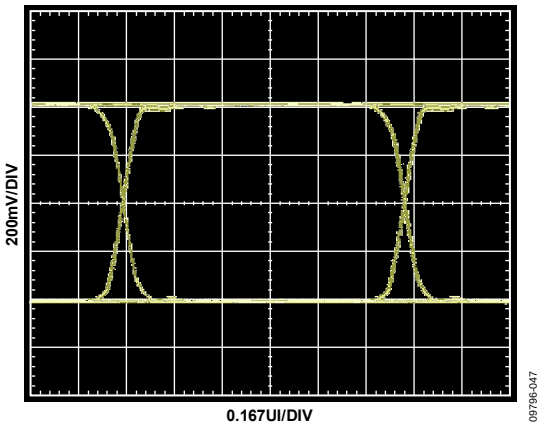

Figure 9. 4.25 Gbps Input Eye (TP1 from Figure 7)

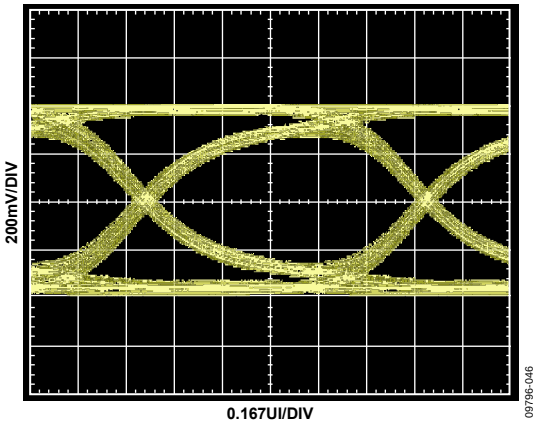

Figure 11. 4.25 Gbps Output Eye (TP2 from Figure 7)

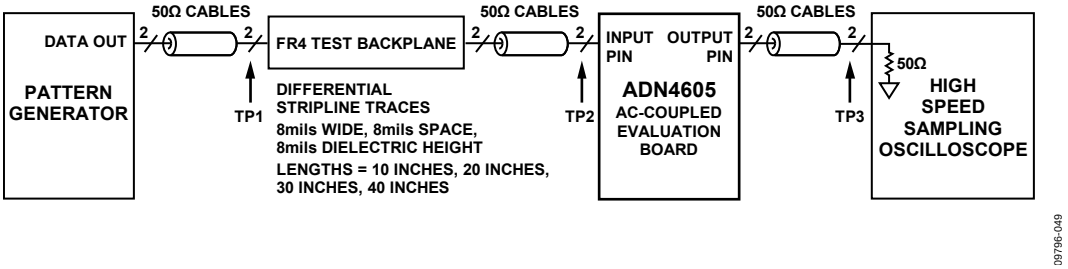

Figure 12. Equalization Test Circuit

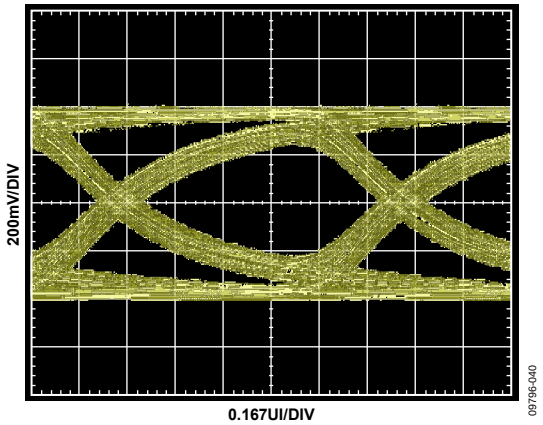

Figure 13. 4.25 Gbps Input Eye, 20-Inch FR4 Input Channel (TP2 from Figure 12)

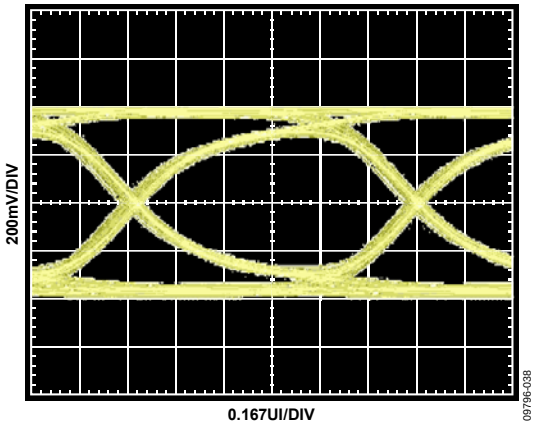

Figure 15. 4.25 Gbps Output Eye, 20-Inch FR4 Input Channel, EQ = 12 dB (TP3 from Figure 12)

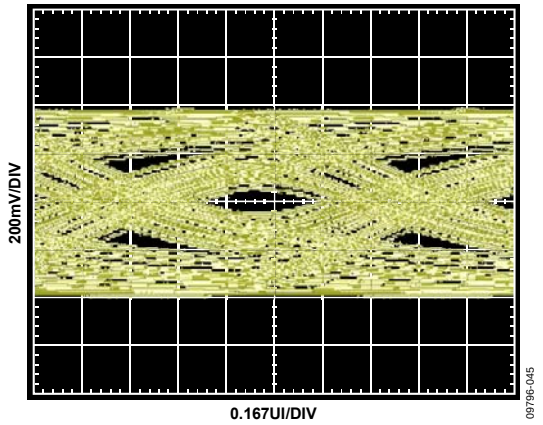

Figure 14. 4.25 Gbps Input Eye, 40-Inch FR4 Input Channel (TP2 from Figure 12)

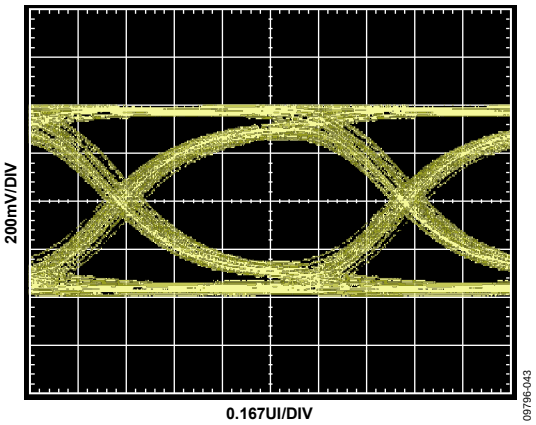

Figure 16. 4.25 Gbps Output Eye, 40-Inch FR4 Input Channel, EQ = 12 dB (TP3 from Figure 12)

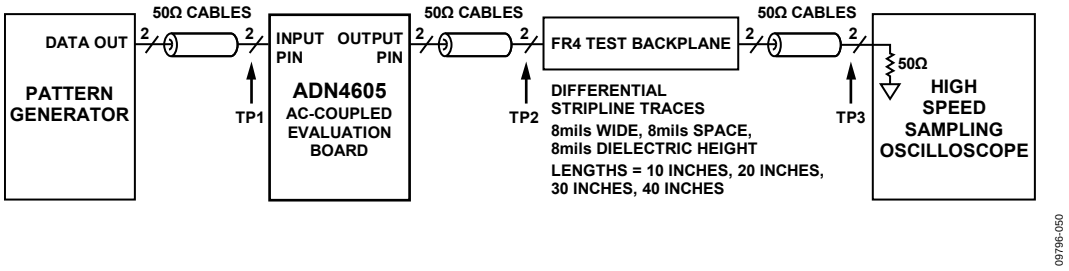

Figure 17. Preemphasis Test Circuit

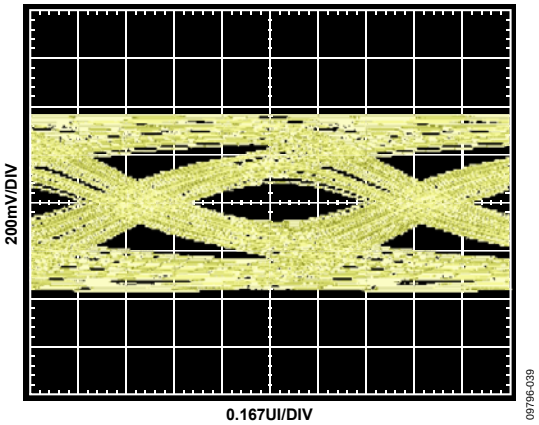

Figure 18. 4.25 Gbps Output Eye, 20-Inch FR4 Output Channel, PE = 0 dB (TP3 from Figure 17)

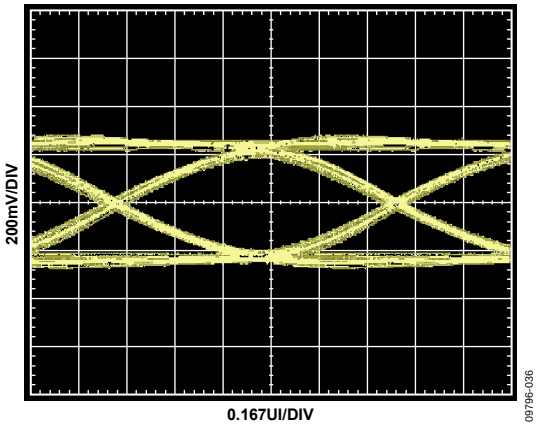

Figure 20. 4.25 Gbps Output Eye, 20-Inch FR4 Input Channel, PE = 5.6 dB (TP3 from Figure 17)

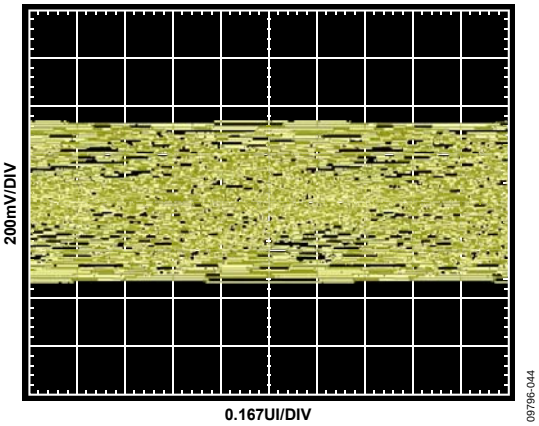

Figure 19. 4.25 Gbps Output Eye, 40-Inch FR4 Input Channel, PE = 0 dB (TP3 from Figure 17)

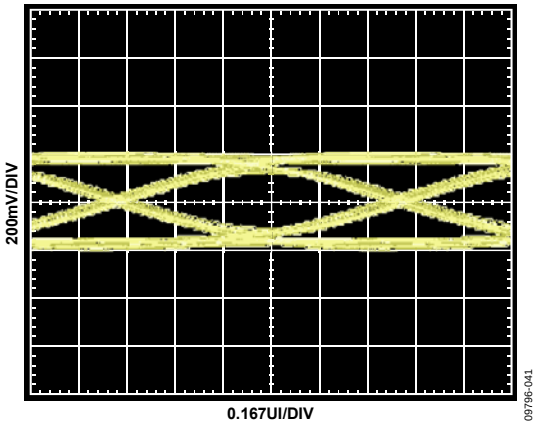

Figure 21. 4.25 Gbps Output Eye, 40-Inch FR4 Input Channel, PE = 9.5 dB (TP3 from Figure 17)

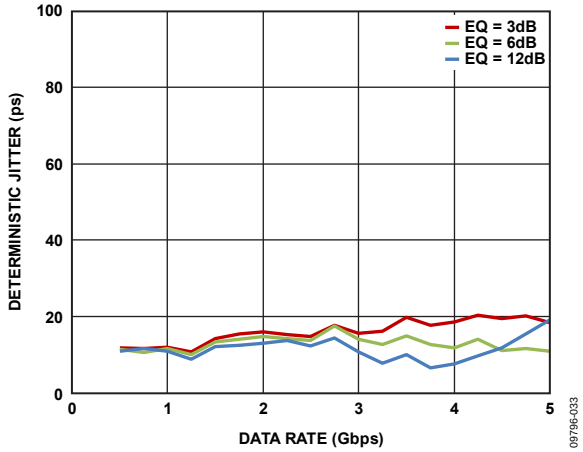

Figure 22. Deterministic Jitter vs. Data Rate

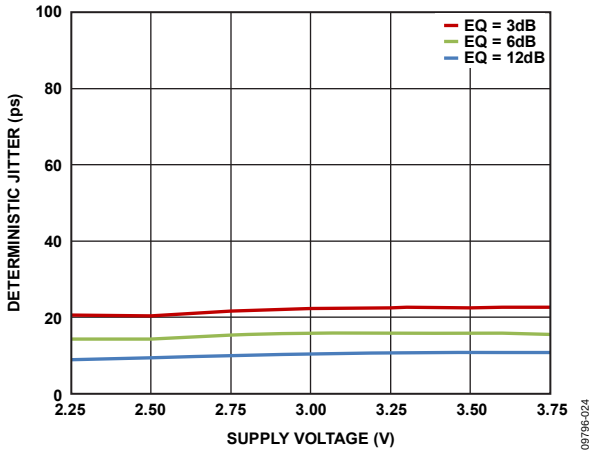

Figure 23. Deterministic Jitter vs. Supply Voltage

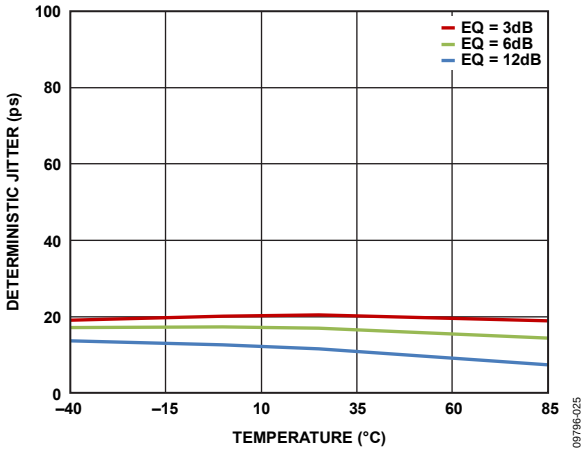

Figure 24. Deterministic Jitter vs. Temperature

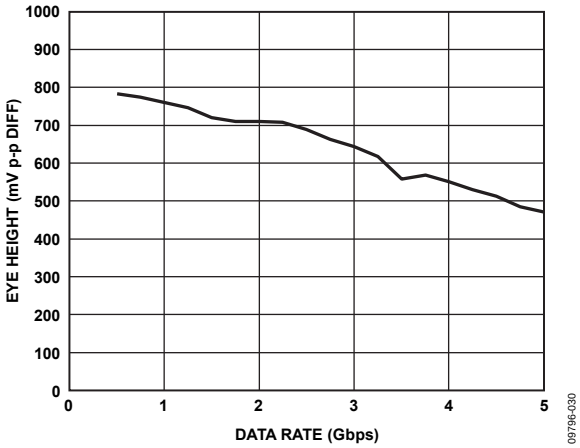

Figure 25. Eye Height vs. Data Rate

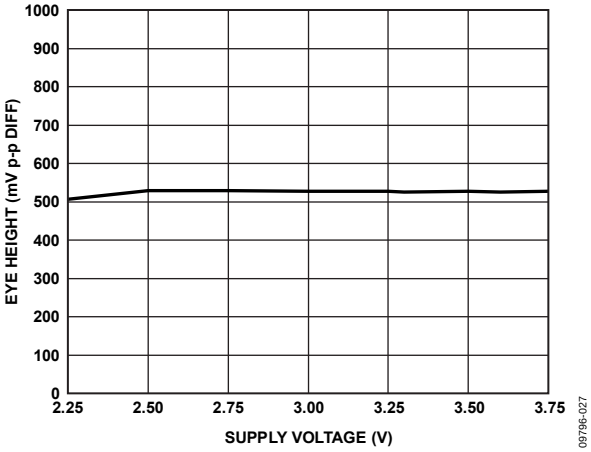

Figure 26. Eye Height vs. Supply Voltage

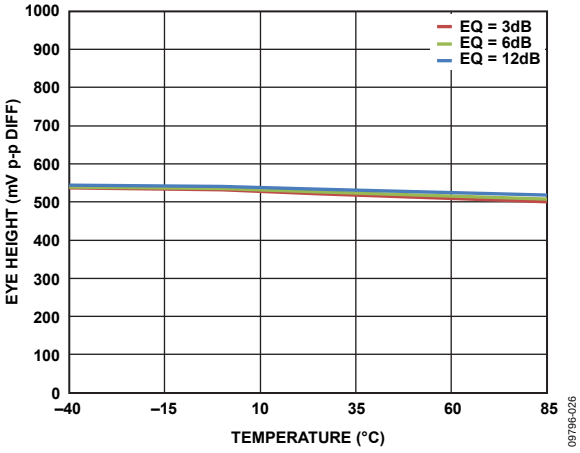

Figure 27. Eye Height vs. Temperature

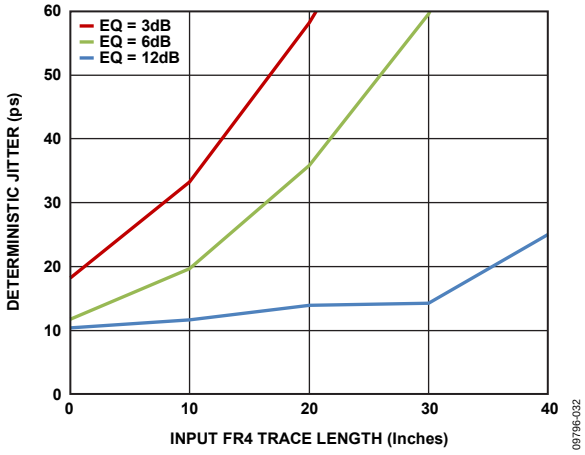

Figure 28. Deterministic Jitter vs. Input FR4 Channel Length

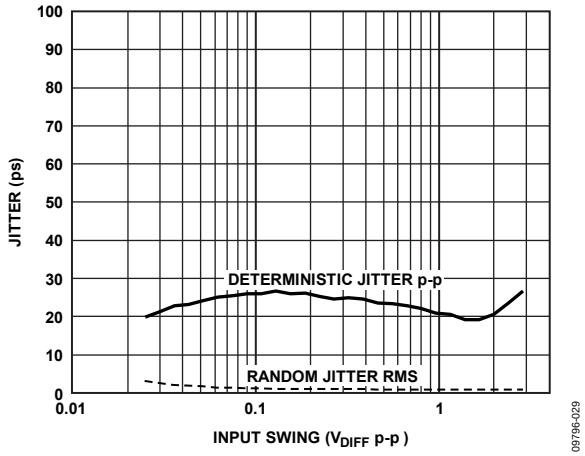

Figure 29. Jitter vs. Differential Input Swing

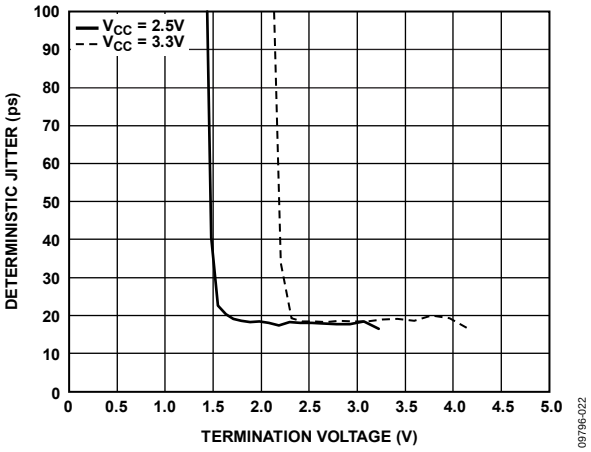

Figure 30. Deterministic Jitter vs. Output Termination Voltage (V_{TTO})

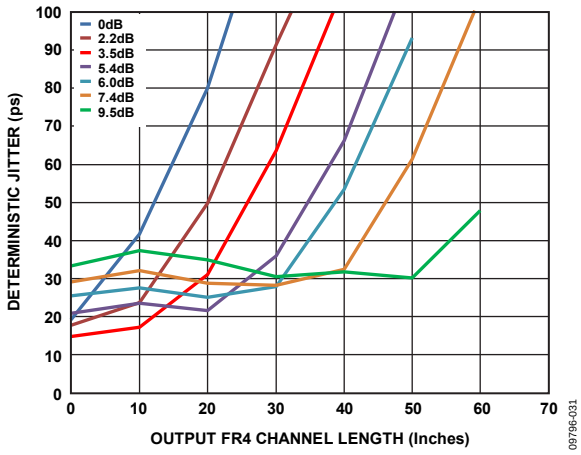

Figure 31. Deterministic Jitter vs. Output FR4 Channel Length

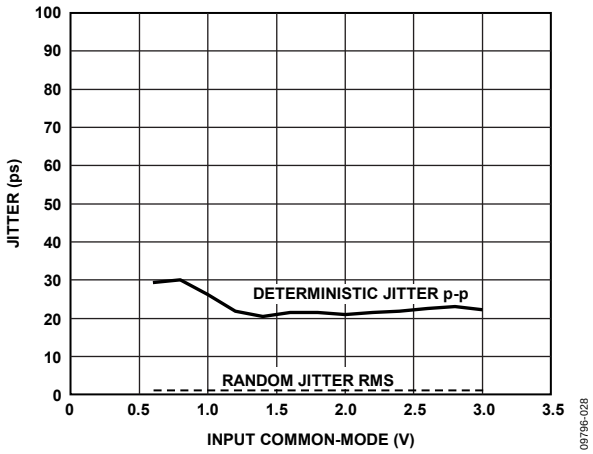

Figure 32. Jitter vs. Input Common-Mode Voltage

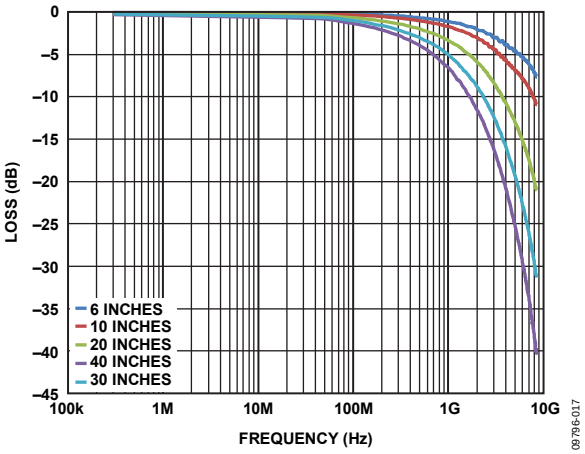

Figure 33. S21 Test Traces

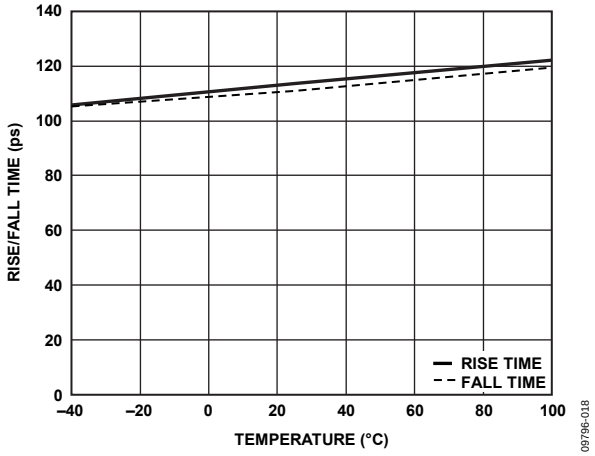

Figure 34. Rise/Fall Time vs. Temperature

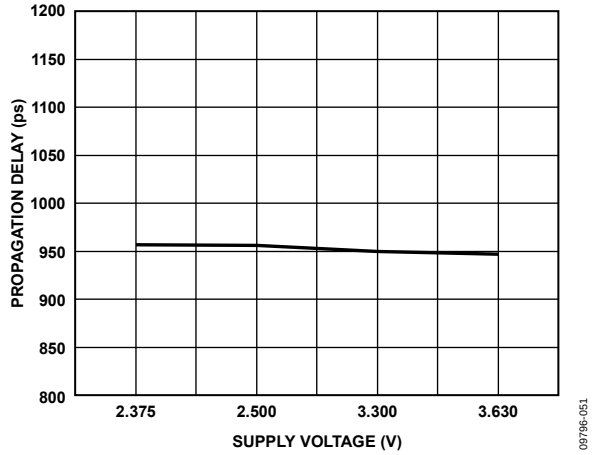

Figure 35. Propagation Delay vs. Supply Voltage

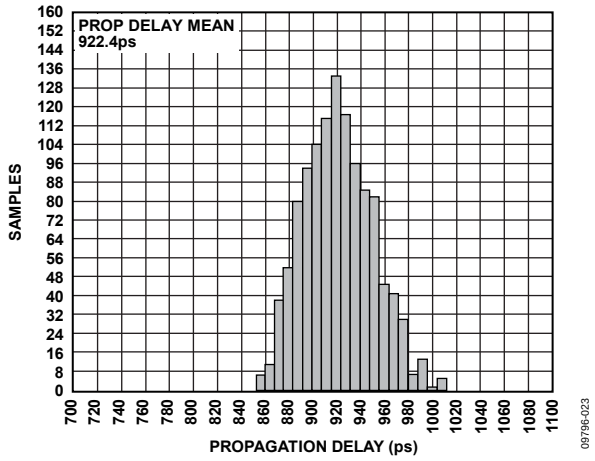

Figure 36. Propagation Delay Histogram

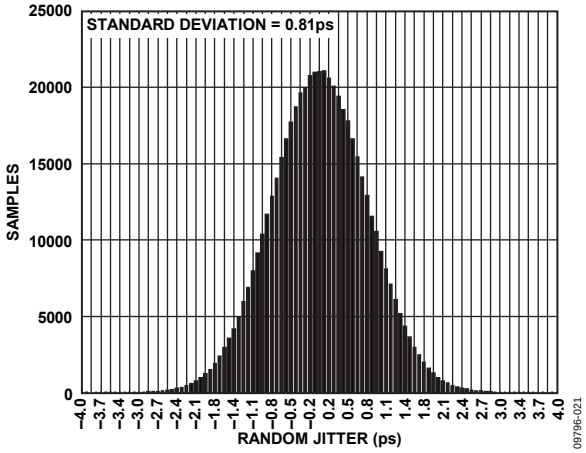

Figure 37. Random Jitter Histogram

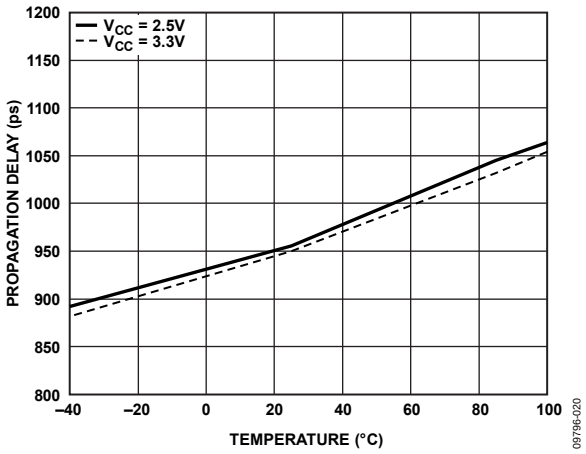

Figure 38. Propagation Delay vs. Temperature

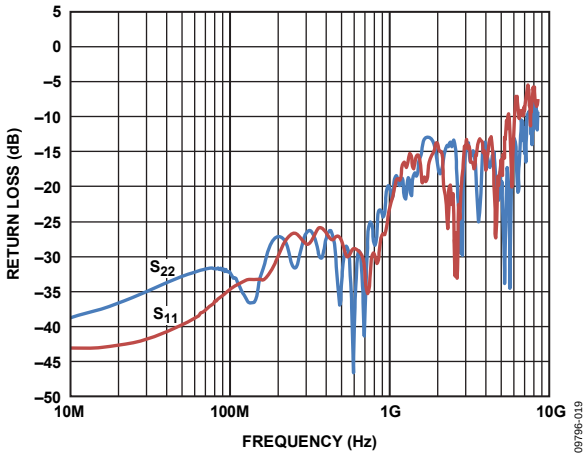

Figure 39. Return Loss (S11, S22)

THEORY OF OPERATION

INTRODUCTION

The ADN4605 is a 40 × 40, buffered, asynchronous crosspoint switch that provides input equalization, output preemphasis, and output level programming capabilities. The receivers integrate an equalizer that is optimized to compensate for typical backplane losses. The switch supports multicast and broadcast operation, allowing the ADN4605 to work in redundancy and port replication applications.

The ADN4605 is configured through either the serial or parallel control interface. The serial or parallel control interface is selected using the SER/$\overline{\text{PAR}}$ dedicated control pin. The serial interface supports both I²C and SPI protocols selected using the I²C/$\overline{\text{SPI}}$ dedicated control pin. The ADN4605 control pins function differently depending on which programming interface is selected, as described in Table 9.

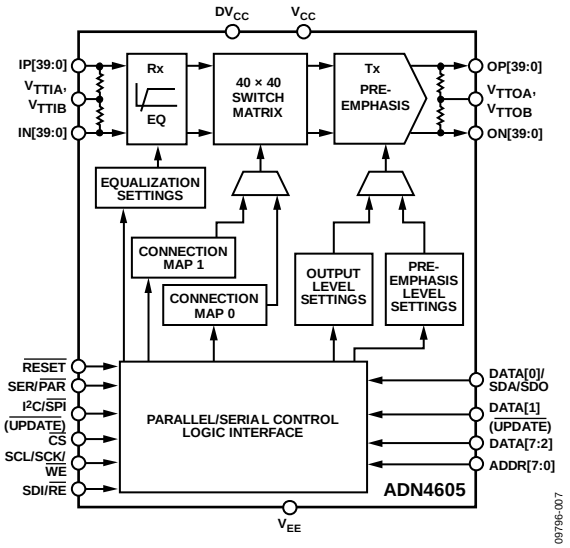

Figure 40. Block Diagram

Table 9. Parallel/Serial Interface Pin Control

		Parallel Mode (SER/$\overline{\text{PAR}}$ = 0)	I²C Mode (SER/$\overline{\text{PAR}}$ = 1, I²C/$\overline{\text{SPI}}$ = 1)	SPI Mode (SER/$\overline{\text{PAR}}$ = 1, I²C/$\overline{\text{SPI}}$ = 0)
Pin No.	**Pin Name**	**Pin Function**	**Pin Function**	**Pin Function**
K4	SER/$\overline{\text{PAR}}$	Serial/parallel control interface selection	Serial/parallel control interface selection	Serial/parallel control interface selection
J4	I²C/$\overline{\text{SPI}}$/$\overline{\text{UPDATE}}$	Update strobe	I²C/$\overline{\text{SPI}}$ control interface selection	I²C/$\overline{\text{SPI}}$ control interface selection
H23	$\overline{\text{WE}}$/SCL/SCK	Parallel write strobe	I²C clock	SPI clock
J23	$\overline{\text{RE}}$/SDI	Parallel read strobe	N/A	SPI data input
K23	$\overline{\text{CS}}$	Chip select	N/A	Chip select
L23	DATA0/SDA/SDO	Parallel register data bit (LSB)	I²C data input	SPI data output
M23	DATA1/$\overline{\text{UPDATE}}$	Parallel register data bits	Update strobe	Update strobe
N23, P23, R23, T23, U23, V23	DATA2 to DATA7	Parallel register data bits	N/A	N/A
L4	$\overline{\text{RESET}}$	Device register reset (active low)	Device register reset (active low)	Device register reset (active low)
M4	ADDR0	Parallel register address bit (LSB)	N/A	N/A
N4, P4, R4, T4, U4, V4, W4	ADDR1to ADDR7	Parallel register address bits	I²C LSB device address to I²C MSB device address	N/A

RECEIVERS

Input Structure and Input Levels

The ADN4605 receiver inputs incorporate 50 Ω termination resistors, ESD protection, and a fixed equalizer that is optimized for operation over long backplane traces. Each receive channel also provides a positive/negative (P/N) inversion function, which allows the user to swap the sign of the input signal path to eliminate the need for board-level crossovers.

Equalization

The ADN4605 receiver incorporates a continuous time equalizer (EQ) that provides up to 12 dB of high frequency boost to compensate up to 40 inches of FR4 at 4.25 Gbps. Each input has two equalizer control bits. The receiver is disabled by default. The boost can be set to defined levels by programming the respective address register bits (Address 0xC0 through Address 0xC9) for the target input channel to the specified logic combinations as shown in Table 10.

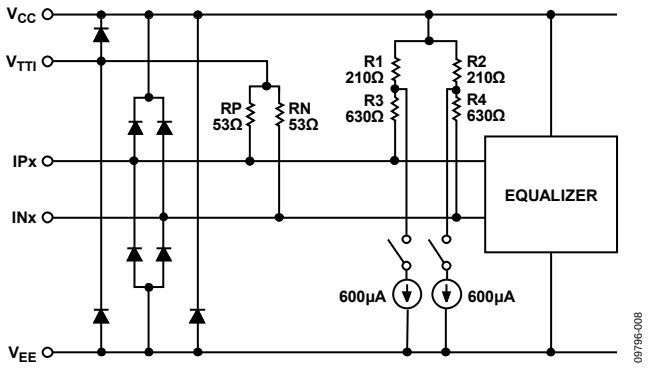

Figure 41. Simplified Input Circuit

Table 10. Equalization Control Registers

Register Address	Default	Register Name	Bits	Bit Name	Functionality Description
0xC0	0x0	Rx EQ Control (Rx IN 3 to Rx IN 0)	7:6	RXEQIN [3]	00 = Rx disabled (default) 01 = 3 dB boost 10 = 6 dB boost 11 = 12 dB boost
			5:4	RXEQIN [2]	
			3:2	RXEQIN [1]	
			1:0	RXEQIN [0]	
0xC1	0x0	Rx EQ Control (Rx IN 7 to Rx IN 4)	7:6	RXEQIN [7]	
			5:4	RXEQIN [6]	
			3:2	RXEQIN [5]	
			1:0	RXEQIN [4]	
0xC2	0x0	Rx EQ Control (Rx IN 11 to Rx IN 8)	7:6	RXEQIN [11]	
			5:4	RXEQIN [10]	
			3:2	RXEQIN [9]	
			1:0	RXEQIN [8]	
0xC3	0x0	Rx EQ Control (Rx IN 15 to Rx IN 12)	7:6	RXEQIN [15]	
			5:4	RXEQIN [14]	
			3:2	RXEQIN [13]	
			1:0	RXEQIN [12]	
0xC4	0x0	Rx EQ Control (Rx IN 19 to Rx IN 16)	7:6	RXEQIN [19]	
			5:4	RXEQIN [18]	
			3:2	RXEQIN [17]	
			1:0	RXEQIN [16]	
0xC5	0x0	Rx EQ Control (Rx IN 23to Rx IN 20)	7:6	RXEQIN [23]	
			5:4	RXEQIN [22]	
			3:2	RXEQIN [21]	
			1:0	RXEQIN [20]	
0xC6	0x0	Rx EQ Control (Rx IN 27 to Rx IN 24)	7:6	RXEQIN [27]	
			5:4	RXEQIN [26]	
			3:2	RXEQIN [25]	
			1:0	RXEQIN [24]	

Register Address	Default	Register Name	Bits	Bit Name	Functionality Description
0xC7	0x0	Rx EQ Control (Rx IN 31 to Rx IN 28)	7:6 5:4 3:2 1:0	RXEQIN [31] RXEQIN [30] RXEQIN [29] RXEQIN [28]	00 = Rx disabled (default) 01 = 3 dB boost 10 = 6 dB boost 11 = 12 dB boost
0xC8	0x0	Rx EQ Control (Rx IN35 to Rx IN 32)	7:6 5:4 3:2 1:0	RXEQIN [35] RXEQIN [34] RXEQIN [33] RXEQIN [32]	
0xC9	0x0	Rx EQ Control (Rx IN 39 to Rx IN 36)	7:6 5:4 3:2 1:0	RXEQIN [39] RXEQIN [38] RXEQIN [37] RXEQIN [36]	
0xCA	0x0 (Write only)	Rx EQ Control (Rx IN Broadcast)	1:0	RXEQIN BC	

POLARITY INVERSION

The P/N inversion is a feature intended to allow the user to implement the equivalent of a board-level crossover in a much smaller area and without additional via impedance discontinuities that degrade the high frequency integrity of the signal path. The P/N inversion is available independently for each of the 40 input and output channels, which are controlled by writing to the RXSIGN bit of the RX Sign control registers (Addresses 0xCB through Address 0xCF) and the TXSIGN bit of the TX control registers (Address 0xA9 through Address 0xAD).

Table 11. Signal Path Polarity Control

Register Address	Default	Register Name	Bits	Bit Name	Functionality Description
0xCB	0x00	RX SIGN RX IN 07 to RX IN 00	7: 0	RXSIGN [7]to RXSIGN [0]	Signal path polarity inversion (input/output) 0 = noninvert 1 = invert
0xCC	0x00	RX SIGN RX IN 15 to RX IN 08	7: 0	RXSIGN [15] to RXSIGN [8]	
0xCD	0x00	RX SIGN RX IN 23 to RX IN 16	7: 0	RXSIGN[23] to RXSIGN [16]	
0xCE	0x00	RX SIGN RX IN31 to RX IN 24	7: 0	RXSIGN [31] to RXSIGN [24]	
0xCF	0x00	RX SIGN RX IN 39 to RX IN 32	7: 0	RXSIGN [39] to RXSIGN [32]	
0xA9	0x00	TX SIGN TX OUT 07 to TX OUT 00	7: 0	TXSIGN [7] to TXSIGN [0]	
0xAA	0x00	TX SIGN TX OUT 15 to TX OUT 08	7: 0	TXSIGN [15] to TXSIGN [8]	
0xAB	0x00	TX SIGN TX OUT 23 to TX OUT 16	7: 0	TXSIGN [23] to TXSIGN [16]	
0xAC	0x00	TX SIGN TX OUT 31 to TX OUT 24	7: 0	TXSIGN [31] to TXSIGN [24]	
0xAD	0x00	TX SIGN TX OUT 39 to TX OUT 32	7: 0	TXSIGN [39] to TXSIGN [32]	

SWITCH CORE

The ADN4605 switch core is a fully nonblocking 40 × 40 array that allows multicast and broadcast configurations. The configuration of the switch core is programmed through either the serial or parallel control interface. The crosspoint configuration map, which controls the connectivity of the switch core, consists of a double rank register architecture, as shown in Figure 42.

The second rank registers contain the current state of the crosspoint. The first rank registers contain the next state. Each entry in the connection map stores six bits per output, which indicates which of the 40 inputs are connected to a given output. An entire connectivity matrix can be programmed at once by passing data from the first rank registers into the second rank by writing 0x01 to the XPT Update register (Address 0x01). An external $\overline{\text{UPDATE}}$ pin can also be used to control the data transfer as shown in Table 9.

The first rank registers store connection configurations for the crosspoint. Map 0 is the default map and is located at Address 0x04 to Address 0x2B. By default, Map 0 contains a diagonal connection configuration whereby Input 0 is connected to Output 0, Input 1 to Output 1, Input 2 to Output 2, and so on.

Similarly, by default, Map 1 contains the opposite diagonal connection configuration where Input 0 is connected to Output 39, Input 1 to Output 38, and so on. Both maps are read/write accessible registers. The active map is selected by writing to the XPT Map Table Select register (Address 0x02).

The crosspoint is configured by addressing the register assigned to the desired output and writing the desired connection data into the first rank of latches in either Map 0 or Map 1. The connection data is equivalent to the binary coded value of the input number. This process is repeated until each of the desired connections is programmed.

In situations where multiple outputs are to be programmed to a single input, a broadcast command is available. A broadcast command is issued by writing the binary value of the desired input to the XPT Broadcast register (Address 0x03). The broadcast is applied to the selected map table.

The current state of the crosspoint connectivity is available by reading the XPT Status registers (Address 0x54 to Address 0x7B). Register descriptions for Map 0, Map 1, and XPT status registers are shown in Table 12.

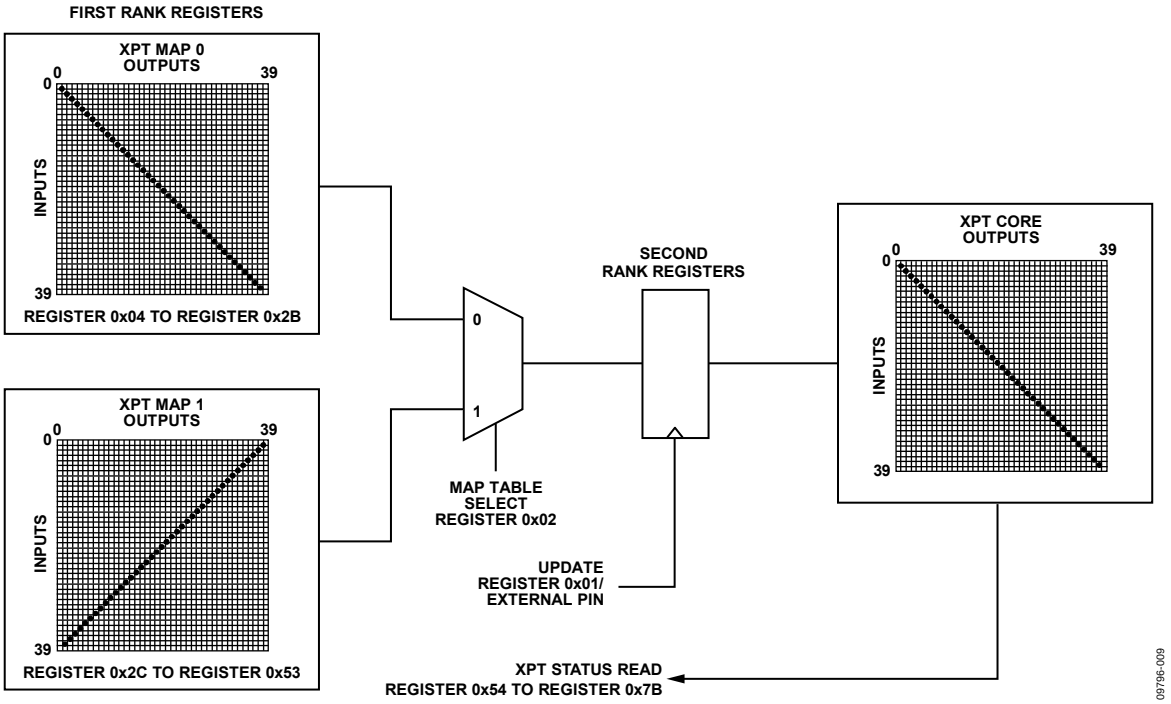

Figure 42. Crosspoint Connection Map Block Diagram

Table 12. XPT Control Registers

Register Address	Default	Register Name	Bits	Bit Name	Functionality Description
0x00	0x00 (Write only)	Software Reset	0	Software reset	Reset the ADN4605 registers to default values
0x01	0x00 (Write only)	XPT Update	0	XPT Update	Updates XPT switch core (active high)
0x02	0x00	XPT Map Table Select	0	Map Table Select	0: Map 0 is selected (default) 1: Map 1 is selected
0x03	0x00 (Write only)	XPT Broadcast	5:0	XPT BCAST [5:0]	Assigns all output values at once for the selected XPT table map
0x04 to 0x2B	0x00 to 0x27	XPT Map 0 Control 0 to Control 39	5:0	OUT x [5:0]	Output (x = 0 to 39) connection assignments
0x2C to 0x53	0x27 to 0x00	XPT Map 1 Control 39 to Control 0	5:0	OUT x [5:0]	Output (x = 39 to 0) connection assignments
0x54 to 0x7B	0x00 to 0x00	XPT Status Control 39 to Control 0	5:0	OUT x [5:0]	Output (x = 0 to 39) connection status

RESET

On initial power-up, or at any point in operation, the ADN4605 register set can be restored to the default values by pulling the $\overline{\text{RESET}}$ pin low according to the control logic timing specifications. During normal operation, however, the $\overline{\text{RESET}}$ pin must be pulled up to DV_{CC}. A software reset is also available by writing the value 0x01 to the Reset register at Address 0x00. This register is write-only.

TRANSMITTERS

Output Structure and Output Levels

The ADN4605 transmitter outputs incorporate 50 Ω termination resistors, ESD protection, and output current switches. Each channel provides independent control of both the absolute output level and the preemphasis output level. Note that the choice of output current affects the output common-mode level.

Preemphasis

Transmission line attenuation can be equalized at the transmitter using preemphasis. The transmit equalizer setting can be chosen by matching the channel loss to the amount of boost provided by the preemphasis.

Transmitter preemphasis levels, as well as dc output levels, can be set through either the serial or parallel control interface.

Table 13 summarizes the absolute output levels and preemphasis level control settings. The output level control sets the dc current level, and the preemphasis level control sets the PE current in the transmitter, as shown in Figure 43. The full resolution of eight settings is available through the serial or parallel interface. A single setting can be programmed to all outputs simultaneously by writing to the TX Lane Control Broadcast Register (Address 0xA8).

In addition to the enabled state, the Tx has three possible disabled states (standby, squelched, and disabled) controlled by the Tx Drive Control registers (Address 0xB0 to Address 0xB9) shown in Table 14. Disabled is the lowest power-down state. When squelched, the output voltage at both the P and N outputs is the common-mode voltage as defined by the output current settings. Note that the squelch feature is only available when using a 3.3 V core supply voltage (V_{CC}). In standby, the output level of both P and N outputs is pulled up to the termination supply (V_{TTOA} or V_{TTOB}).

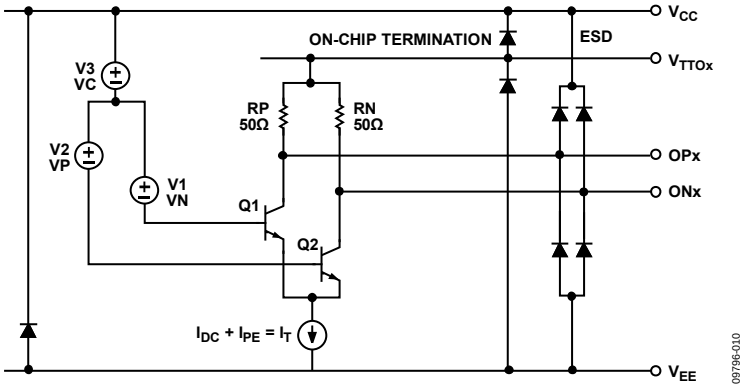

Figure 43. Simplified Tx Output Circuit

Table 13. Preemphasis and Output Level Settings

Register Address	Default	Register Name	Bits	Bit Name	Description
0x80 (Output 0) to 0xA7 (Output 39) and 0xA8 (Tx Broadcast)	0x40	Tx Lane Control Output 0 to Tx Lane Control Output 39 and Tx Broadcast	7	Reserved	0 (Reserve bit)
			6:4	OLEV	000: 0 mA
					001: 4 mA
					010: 8 mA
					011: 12 mA
					100: 16 mA
					101: 20 mA
					110: 24 mA
					111: (Reserve bit)
			3	Overdrive	1: overdrive (increases OLEV and PE currents by 25%)
					0: no overdrive
			2:0	PE	000: 0 mA
					001: 2 mA
					010: 3 mA
					011: 4 mA
					100: 5 mA
					101: 6 mA
					110: 7 mA
					111: 8 mA

Table 14. Transmitter Output Enable State Settings

Register Address	Default	Register Name	Bits	Bit Name	Functionality Description
0xB0	0x00	Tx Drive Control Tx3 to Tx0	7:6 5:4 3:2 1:0	TXEN [3] TXEN [2] TXEN [1] TXEN [0]	11: enabled 10: Tx standby 01: Tx squelched 00: Tx disabled (default)
0xB1	0x00	Tx Drive Control Tx7 to Tx4	7:6 5:4 3:2 1:0	TXEN [7] TXEN [6] TXEN [5] TXEN [4]	
0xB2	0x00	Tx Drive Control Tx11 to Tx8	7:6 5:4 3:2 1:0	TXEN [11] TXEN [10] TXEN [9] TXEN [8]	
0xB3	0x00	Tx Drive Control Tx15 to Tx12	7:6 5:4 3:2 1:0	TXEN [15] TXEN [14] TXEN [13] TXEN [12]	
0xB4	0x00	Tx Drive Control Tx19 to Tx16	7:6 5:4 3:2 1:0	TXEN [19] TXEN [18] TXEN [17] TXEN [16]	
0xB5	0x00	Tx Drive Control Tx23 to Tx20	7:6 5:4 3:2 1:0	TXEN [23] TXEN [22] TXEN [21] TXEN [20]	
0xB6	0x00	Tx Drive Control Tx27 to Tx24	7:6 5:4 3:2 1:0	TXEN [27] TXEN [26] TXEN [25] TXEN [24]	
0xB7	0x00	Tx Drive Control Tx31 to Tx28	7:6 5:4 3:2 1:0	TXEN [31] TXEN [30] TXEN [29] TXEN [28]	
0xB8	0x00	Drive Control Tx35 to Tx32	7:6 5:4 3:2 1:0	TXEN [35] TXEN [34] TXEN [33] TXEN [32]	
0xB9	0x00	Drive Control Tx39 to Tx36	7:6 5:4 3:2 1:0	TXEN [39] TXEN [38] TXEN [37] TXEN [36]	
0xBA	0x00 (Write only)	Tx Drive Control	1:0	TXENBC [39]	

The amount of high frequency boost provided by the transmitter is determined by both the output and preemphasis level settings. Table 15 provides an example of how the absolute output and preemphasis level settings determine the amount of high frequency boost at the Tx output. Note that the OLEV setting refers to the main tap output current and the PE setting refers to the delayed tap current.

The preemphasis boost equation follows:

$$Gain[\text{dB}] = 20 \times \log_{10}\left(1 + \frac{V_{SW-PE} - V_{SW-DC}}{V_{SW-DC}}\right) \quad (1)$$

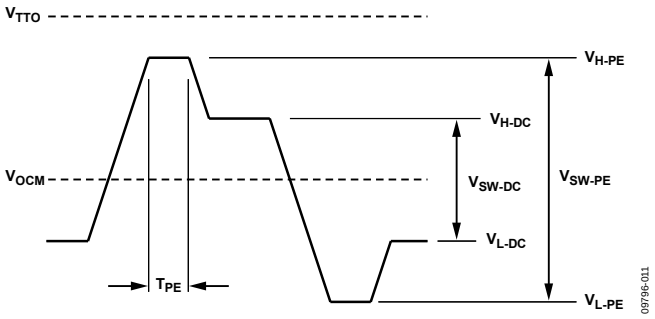

Figure 44. Signal Level Definitions

Table 15. Preemphasis Boost and Overshoot vs. Setting Example

PE Setting	Delayed Tap Current (mA)	OLEV Setting	Main Tap Current (mA)	Gain (dB)	Overshoot (%)	DC Swing (mV p-p Diff)
0	0	4	16	0.00	0.00	800
3	4	5	20	3.52	50.00	800
7	8	6	24	6.02	100.00	800
7	8	4	16	9.54	200.00	400
7	8	3	12	13.98	400.00	200

Table 16. Symbol Definitions

Symbol	Formula	Definition
I_{DC}	Programmable	Output current for main tap output level (OLEV)
I_{PE}	Programmable	Output current for PE delayed tap (PE)
I_{TTO}	$I_{DC} + I_{PE}$	Total transmitter output current
V_{DPP-DC}	$25\ \Omega \times I_{DC} \times 2$	Peak-to-peak differential voltage swing of nonpreemphasized waveform
V_{DPP-PE}	$25\ \Omega \times I_{TTO} \times 2$	Peak-to-peak differential voltage swing of preemphasized waveform
V_{SW-DC}	$V_{DPP-DC}/2 = V_{H-DC} - V_{L-DC}$	DC single-ended voltage swing
V_{SW-PE}	$V_{DPP-PE}/2 = V_{H-PE} - V_{L-PE}$	Preemphasized single-ended voltage swing
$\Delta V_{OCM_DC-COUPLED}$	$25\ \Omega \times I_{TTO}/2$	Output common-mode shift, dc-coupled outputs
$\Delta V_{OCM_AC-COUPLED}$	$50\ \Omega \times I_{TTO}/2$	Output common-mode shift, ac-coupled outputs
V_{OCM}	$V_{TTO} - \Delta V_{OCM} = (V_{H-DC} + V_{L-DC})/2$	Output common-mode voltage
V_{H-DC}	$V_{TTO} - \Delta V_{OCM} + V_{DPP-DC}/2$	DC single-ended output high voltage
V_{L-DC}	$V_{TTO} - \Delta V_{OCM} - V_{DPP-DC}/2$	DC single-ended output low voltage
V_{H-PE}	$V_{TTO} - \Delta V_{OCM} + V_{DPP-PE}/2$	Maximum single-ended output voltage
V_{L-PE}	$V_{TTO} - \Delta V_{OCM} - V_{DPP-PE}/2$	Minimum single-ended output voltage

TERMINATION

The inputs and outputs include integrated 50 Ω termination resistors. The internal resistors can be disabled for applications that require external termination resistors. For example, disabling the integrated 50 Ω termination resistors allow alternative termination values such as 75 Ω as shown in Figure 45.

Note that the integrated 50 Ω termination resistors are optimal for high data rate digital signaling. Disabling the terminations can reduce the overall performance.

The termination control for the receiver inputs can be accessed through Register Address 0xD0 (Input 0 to Input 19) and Register Address 0xD1 (Input 20 to Input 39). The termination control for the transmitter outputs can be accessed through Register Address 0xBC (Output 0 to Output 19) and Register Address 0x BD (Output 20 to Output 39).

Table 17 shows the termination control registers. Each bit controls the terminations settings for four inputs/outputs. A Logic 0 enables the terminations for the respective group. A Logic 1 disables the terminations for the respective group. The terminations are enabled by default.

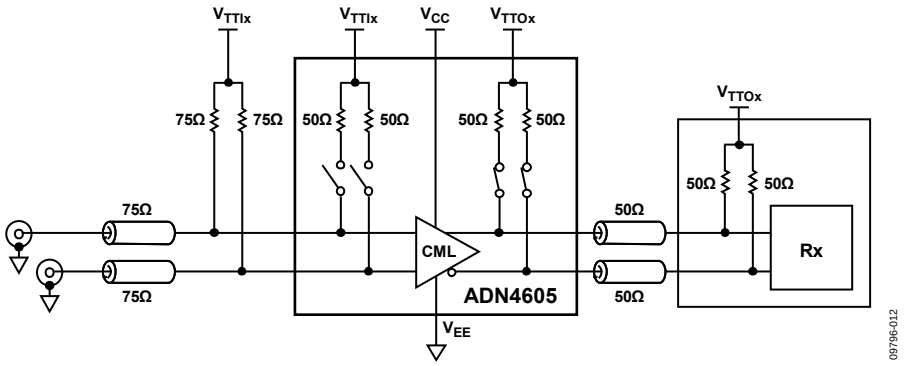

Figure 45. 75 Ω to 50 Ω Impedance Translator

Table 17. Termination Control Registers

Register Address	Default	Register Name	Bit	Bit Name	Description	Functionality
0xBD	0x00	Tx Termination Control	4	TXB_TERM	Output [39:36] (B side) termination control	0 = terminations enabled
			3	TXB_TERM	Output [35:32] (B side) termination control	1= terminations disabled
			2	TXB_TERM	Output [31:28] (B side) termination control	
			1	TXB_TERM	Output [27:24] (B side) termination control	
			0	TXB_TERM	Output [23:20] (B side) termination control	
0xBC	0x00	Tx Termination Control	4	TXA_TERM	Output [19:16] (A side) termination control	
			3	TXA_TERM	Output [15:12] (A side) termination control	
			2	TXA_TERM	Output [11:8] (A side) termination control	
			1	TXA_TERM	Output [7:4] (A side) termination control	
			0	TXA_TERM	Output [3:0] (A side) termination control	
0xD1	0x00	Rx Termination Control	4	RXB_TERM	Input [39:36] (B side) termination control	
			3	RXB_TERM	Input [35:32] (B side) termination control	
			2	RXB_TERM	Input [31:28] (B side) termination control	
			1	RXB_TERM	Input [27:24] (B side) termination control	
			0	RXB_TERM	Input [23:20] (B side) termination control	
0xD0	0x00	Rx Termination Control	4	RXA_TERM	Input [19:16] (A side) termination control	
			3	RXA_TERM	Input [15:12] (A side) termination control	
			2	RXA_TERM	Input [11:8] (A side) termination control	
			1	RXA_TERM	Input [7:4] (A side) termination control	
			0	RXA_TERM	Input [3:0] (A side) termination control	

I²C SERIAL CONTROL INTERFACE

The ADN4605 register set is controlled through a 2-wire I²C interface. To access the I²C serial interface, both the SER/$\overline{\text{PAR}}$ line and I²C/$\overline{\text{SPI}}$ lines must be held at logic high. The ADN4605 acts only as an I²C slave device. Therefore, the I²C bus in the system needs to include an I²C master to configure the ADN4605 and other I²C devices that may be on the bus.

The ADN4605 I²C interface can be run in the standard (100 kHz) and fast (400 kHz) modes. The SDA line only changes value when the SCL pin is low with two exceptions. To indicate the beginning or continuation of a transfer, the SDA pin is driven low while the SCL pin is high; to indicate the end of a transfer, the SDA line is driven high while the SCL line is high. Therefore, it is important to control the SCL clock to toggle only when the SDA line is stable unless indicating a start, repeated start, or stop condition. To establish I²C communication with the ADN4605, parallel address lines (ADDR[7:1]) need to be configured to the user-assigned I²C device address as shown in Table 18.

Table 18. Example of I²C Device Address Assignment

A7	A6	A5	A4	A3	A2	A1	A0	I²C Device Address
1	0	0	1	0	0	0	X	0x90
1	0	0	1	0	0	1	X	0x92
1	0	0	1	0	1	0	X	0x94
1	0	0	1	0	1	1	X	0x96

I²C DATA WRITE

To write data to the ADN4605 register set, a microcontroller, or any other I²C master, must send the appropriate control signals to the ADN4605 slave device. The steps to be followed are listed below; the signals are controlled by the I²C master unless otherwise specified. A diagram of the procedure is shown in Figure 46.

1. Send a start condition (while holding the SCL line high, pull the SDA line low).
2. Send the ADN4605 part address (seven bits) whose bits are controlled by the input pins ADDR[7:1]. This transfer should be MSB first.
3. Send the write indicator bit (0).
4. Wait for the ADN4605 to acknowledge the request.
5. Send the register address (eight bits) to which data is to be written. This transfer should be MSB first.
6. Wait for the ADN4605 to acknowledge the request.
7. Send the data (eight bits) to be written to the register whose address was set in Step 5. This transfer should be MSB first.
8. Wait for the ADN4605 to acknowledge the request.
9. Do one or more of the following:
   a. Send a stop condition (while holding the SCL line high, pull the SDA line high) and release control of the bus.
   b. Send a repeated start condition (while holding the SCL line high, pull the SDA line low) and continue with Step 2 of the write procedure (see the I²C Timing Specifications section) to perform a write.
   c. Send a repeated start condition (while holding the SCL line high, pull the SDA line low) and continue with Step 2 of this procedure to perform a read from another address.
   d. Send a repeated start condition (while holding the SCL line high, pull the SDA line low) and continue with Step 8 of this procedure to perform a read from the same address.

The ADN4605 write process is shown in Figure 46. The SCL signal is shown along with a general write operation and a specific example. In the example, Data 0x4B is written to Address 0x6D of an ADN4605 part with a part address of 0x92. The ADN4605 device address selections are more flexible than shown. It is important to note that the SDA line only changes when the SCL line is low, except for the case of sending a start, stop, or repeated start condition, Step 1 and Step 9 in this case.

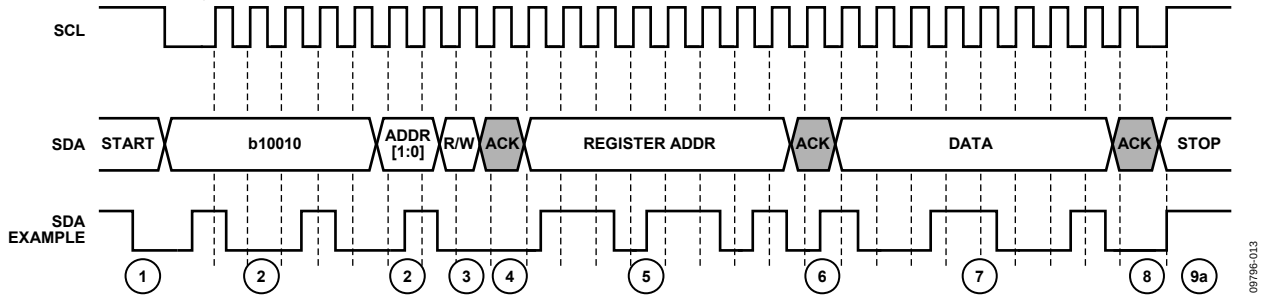

Figure 46. I²C Write Diagram

I²C DATA READ

To read data from the ADN4605 register set, a microcontroller, or any other I²C master needs to send the appropriate control signals to the ADN4605 slave device. The steps are listed below; the signals are controlled by the I²C master unless otherwise specified. A diagram of the procedure is shown in Figure 47.

1. Send a start condition (while holding the SCL line high, pull the SDA line low).
2. Send the ADN4605 part address (seven bits) whose bits are controlled by the input pins ADDR[7:1]. This transfer should be MSB first.
3. Send the write indicator bit (0).
4. Wait for the ADN4605 to acknowledge the request.
5. Send the register address (eight bits) from which data is to be read. This transfer should be MSB first. The register address is kept in memory in the ADN4605 until the part is reset or the register address is written over with the same procedure (Step 1 to Step 6).
6. Wait for the ADN4605 to acknowledge the request.
7. Send a repeated start condition (while holding the SCL line high, pull the SDA line low).
8. Send the ADN4605 part address (seven bits) whose bits are controlled by the input pins ADDR[7:1]. This transfer should be MSB first.
9. Send the read indicator bit (1).
10. Wait for the ADN4605 to acknowledge the request.
11. The ADN4605 then serially transfers the data (eight bits) held in the register indicated by the address set in Step 5.
12. Acknowledge the data.
13. Do one or more of the following:
    a. Send a stop condition (while holding the SCL line high pull the SDA line high) and release control of the bus.
    b. Send a repeated start condition (while holding the SCL line high, pull the SDA line low) and continue with Step 2 of the write procedure (see the I²C Data Write section) to perform a write.
    c. Send a repeated start condition (while holding the SCL line high, pull the SDA line low) and continue with Step 2 of this procedure to perform a read from another address.
    d. Send a repeated start condition (while holding the SCL line high, pull the SDA line low) and continue with Step 8 of this procedure to perform a read from the same address.

The ADN4605 read process is shown in Figure 47. The SCL signal is shown along with a general read operation and a specific example. In the example, Data 0x49 is read from Address 0x6D of an ADN4605 part with a part address of 0x92. The part address is seven bits wide and is composed of the ADN4605 (ADDR[7:1]). In this example, the ADDR{1:0] bits are set to b01.

In Figure 47, the corresponding step number is visible in the circle under the waveform. The SCL line is driven by the I²C master and never by the ADN4605 slave. As for the SDA line, the data in the shaded polygons is driven by the ADN4605, whereas the data in the nonshaded polygons is driven by the I²C master. The end phase case shown is that of Step13a.

Note that the SDA line only changes when the SCL line is low, except for the case of sending a start, stop, or repeated start condition, as in Step 1, Step 7, and Step 13. In Figure 47, A is the same as ACK. Equally, Sr represents a repeated start where the SDA line is brought high before SCL is raised. SDA is then dropped while SCL is still high.

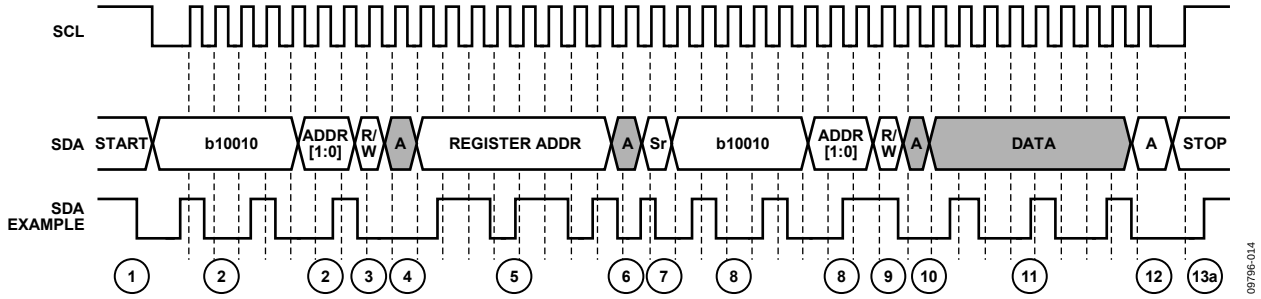

Figure 47. I²C Read Diagram

SPI SERIAL CONTROL INTERFACE

The SPI serial interface of the ADN4605 consists of four wires: $\overline{CS}$, SCK, SDI, and SDO. In order to access the SPI interface the SER/$\overline{PAR}$ line must be held at logic high and the I²C/$\overline{SPI}$ line must be held at logic low. The $\overline{CS}$ pin is used to select the device when more than one device is connected to the serial clock and data lines and must be held at logic low to enable write/read capability to the device when in SPI control mode.

The SCK is used to clock data in and out of the part. The SDI line is used to write to the registers, and the SDO line is used to read data back from the registers. Data on SDI line is clocked on the rising edge of SCK. Data on SDO changes on the falling edge of SCK. The recommended pull-up resistor value is between 500 Ω and 1 kΩ. Strong pull-ups are needed when serial clock speeds that are close to the maximum limit are used or when the SPI interface lines are experiencing large capacitive loading. Larger resistor values can be used for pull-up resistors when the serial clock speed is reduced.

The part operates in a slave mode and requires an externally applied serial clock to the SCK input. The serial interface is designed to allow the part to be interfaced to systems that provide a serial clock that is synchronized to the serial data.

There are two types of serial operations, a read and a write. Command words are used to distinguish between a read and a write operation as shown in Table 19.

Table 19. SPI Command Words

Write Command	0x02 (0000 0010)
Read Command	0x03 (0000 0011)

Write Operation

Figure 48 shows the diagram for a write operation to the ADN4605. Data is clocked into the registers on the rising edge of SCK. When the $\overline{CS}$ line is high, the SDI and SDO lines are in three-state mode. Only when the $\overline{CS}$ goes from a high to a low does the part accept any data on the SDI line. The 8-bit write command must precede the register address byte. The register address byte is then followed by the data byte as shown in Figure 48.

To allow continuous writes, the address pointer register auto-increments by one without having to load the address pointer register each time. Subsequent data bytes are written into sequential registers. Note that not all registers in the 256-byte address space exist and not all registers are writable. Zeroes should be entered for nonexistent address fields when implementing a continuous write operation. Address space 0xE0 to Address 0xFF is reserved and should not be overwritten.

Read Operation

To read back from a register, first send the read command followed by the desired register address. Subsequent clock cycles, with $\overline{CS}$ asserted low, stream data starting from the desired register address onto SDO, MSB first. SDO changes on the falling edge of SCK. Multiple data reads are possible in SPI interface mode because the address pointer register is auto-incremented.

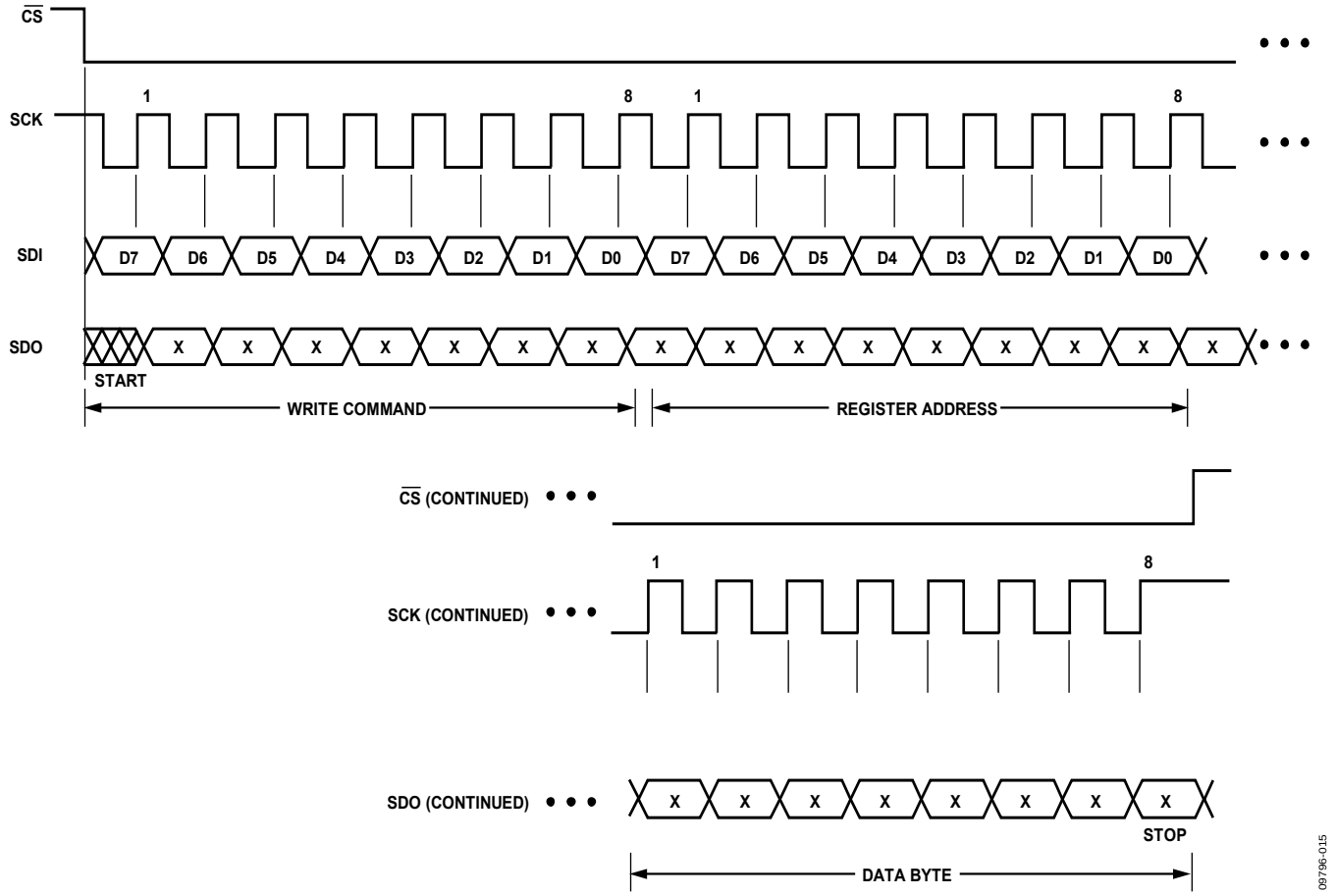

Figure 48. SPI-Writing to the Address Pointer Register Followed by a Single Byte of Data to the Selected Register

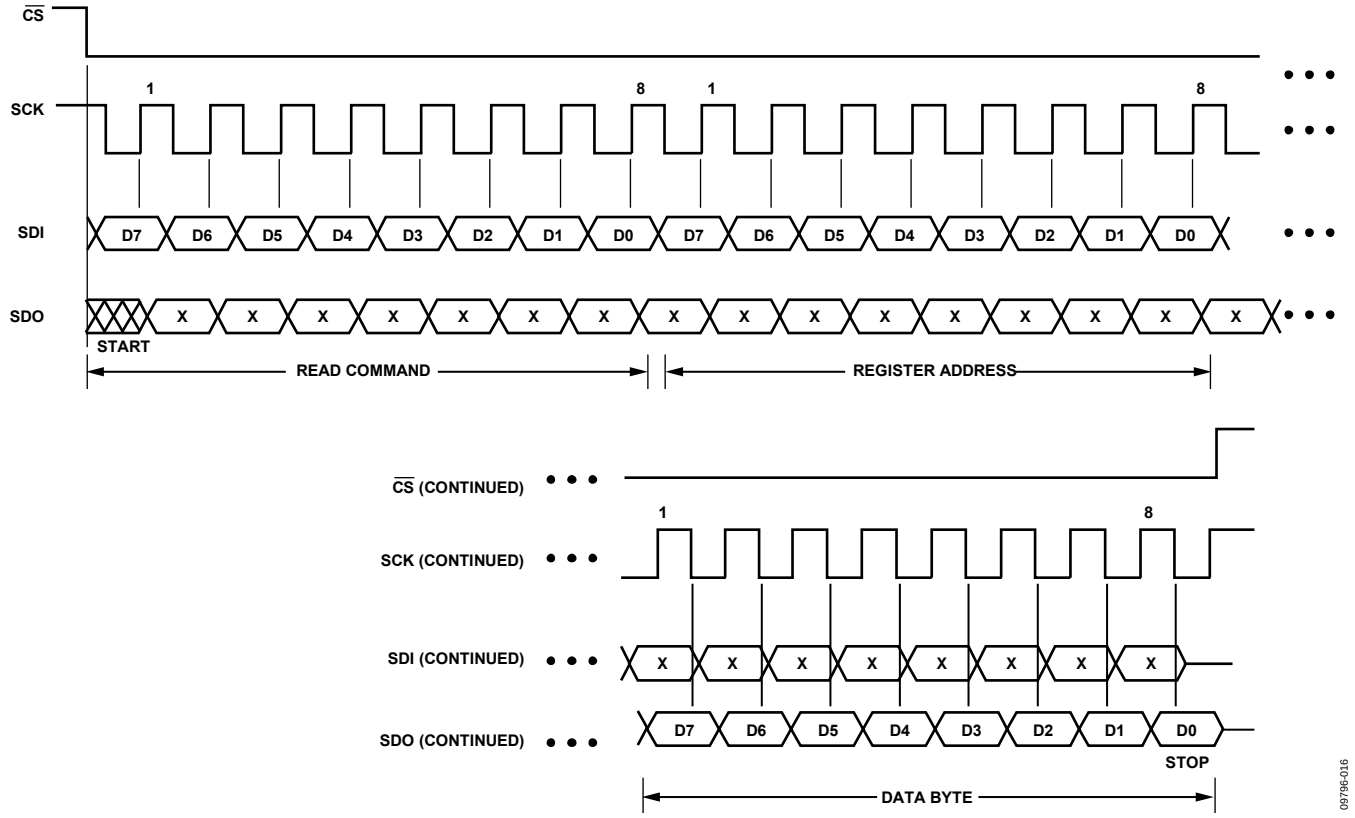

Figure 49. SPI–Reading a Single Byte of Data from a Selected Register

PARALLEL CONTROL INTERFACE

The parallel control interface of the ADN4605 consists of nineteen wires: ADDR[7:0], DATA[7:0], $\overline{WE}$, $\overline{RE}$, and $\overline{CS}$. To access the parallel control interface, the SER/$\overline{PAR}$ line must be held at logic low. The $\overline{CS}$ line is used to select a device when one or more devices share the same address and data lines. The $\overline{CS}$ line must be held at logic low to enable write/read capability to the device when in parallel control mode.

ADDRESS INPUTS: ADDR[7:0]

The binary coded address applied to the address lines determines which device registers are being programmed or read back.

DATA INPUTS/OUTPUTS: DATA[7:0]

In write mode, the binary encoded data applied to the data lines (DATA[7:0]) determine the configuration setting of the register specified by the address lines (ADDR[7:0]).

In read mode, data lines (DATA[7:0]) are low impedance outputs indicating the data byte stored in the register specified by the address lines (ADDR[7:0]). Note that some registers are write only and may not be read from (see Table 20) The read-back drivers are designed to drive high impedances only (>1 kΩ).

WRITE OPERATION

For first rank write enable, forcing this pin to logic low allows the data on the DATA[7:0] lines to be stored in the first rank latch for the register specified by the address lines (ADDR[7:0]). The data is latched during the high-to-low transition of the write enable pulse. The $\overline{WE}$ line must be returned to a logic high state after the write cycle to avoid overwriting the first rank data.

READ OPERATION

For second rank read enable, forcing this line to a logic low state enables the output drivers on the bidirectional data lines (DATA[7:0]), placing the logic in readback mode of operation. The register selected to read from is determined by the binary encoded data configured on the address lines (ADDR[7:0]). When the read enable line is at a logic low, the data stored in the specified register will be latched onto the data lines (DATA[7:0]). The $\overline{RE}$ line is higher priority than the $\overline{WE}$ line; therefore, first rank programming is not possible while in readback mode. Note that some registers are defined as write only and are not accessible in readback mode (see Table 20).

REGISTER MAP

In the Register Map, when settings are provided in the Description column for the first bit, note that these settings apply to all bits with the same function.

Table 20. Register Map

Address: Channel	Default	Register Name	Bits	Bit Name	Description
0x00	0x00 Write only	Software Reset	0	Reset	Software reset
0x01	0x0 Write only	XPT Update	0	XPT Update	Updates crosspoint switch core
0x02	0x00	XPT Map Table Select	0	Map Table Select	0: Map 0 is selected 1: Map 1 is selected
0x03	Write only	XPT Broadcast	5:0	XPT BCAST [5:0]	All outputs connection assignment
0x04	0x00	XPT Map 0 Control 0	5:0	OUT 0 [5:0]	Output 0 connection assignment
0x05	0x01	XPT Map 0 Control 1	5:0	OUT 1 [5:0]	Output 1 connection assignment
0x06	0x02	XPT Map 0 Control 2	5:0	OUT 2 [5:0]	Output 2 connection assignment
0x07	0x03	XPT Map 0 Control 3	5:0	OUT 3 [5:0]	Output 3 connection assignment
0x08	0x04	XPT Map 0 Control 4	5:0	OUT 4 [5:0]	Output 4 connection assignment
0x09	0x05	XPT Map 0 Control 5	5:0	OUT 5 [5:0]	Output 5 connection assignment
0x0A	0x06	XPT Map 0 Control 6	5:0	OUT 6 [5:0]	Output 6 connection assignment
0x0B	0x07	XPT Map 0 Control 7	5:0	OUT 7 [5:0]	Output 7 connection assignment
0x0C	0x08	XPT Map 0 Control 8	5:0	OUT 8 [5:0]	Output 8 connection assignment
0x0D	0x09	XPT Map 0 Control 9	5:0	OUT 9 [5:0]	Output 9 connection assignment
0x0E	0x0A	XPT Map 0 Control 10	5:0	OUT 10 [5:0]	Output 10 connection assignment
0x0F	0x0B	XPT Map 0 Control 11	5:0	OUT 11 [5:0]	Output 11 connection assignment
0x10	0x0C	XPT Map 0 Control 12	5:0	OUT 12 [5:0]	Output 12 connection assignment
0x11	0x0D	XPT Map 0 Control 13	5:0	OUT 13 [5:0]	Output 13 connection assignment
0x12	0x0E	XPT Map 0 Control 14	5:0	OUT 14 [5:0]	Output 14 connection assignment
0x13	0x0F	XPT Map 0 Control 15	5:0	OUT 15 [5:0]	Output 15 connection assignment
0x14	0x10	XPT Map 0 Control 16	5:0	OUT 16 [5:0]	Output 16 connection assignment
0x15	0x11	XPT Map 0 Control 17	5:0	OUT 17 [5:0]	Output 17 connection assignment
0x16	0x12	XPT Map 0 Control 18	5:0	OUT 18 [5:0]	Output 18 connection assignment
0x17	0x13	XPT Map 0 Control 19	5:0	OUT 19 [5:0]	Output 19 connection assignment
0x18	0x14	XPT Map 0 Control 20	5:0	OUT 20 [5:0]	Output 20 connection assignment
0x19	0x15	XPT Map 0 Control 21	5:0	OUT 21 [5:0]	Output 21 connection assignment
0x1A	0x16	XPT Map 0 Control 22	5:0	OUT 22 [5:0]	Output 22 connection assignment
0x1B	0x17	XPT Map 0 Control 23	5:0	OUT 23 [5:0]	Output 23 connection assignment
0x1C	0x18	XPT Map 0 Control 24	5:0	OUT 24 [5:0]	Output 24 connection assignment
0x1D	0x19	XPT Map 0 Control 25	5:0	OUT 25 [5:0]	Output 25 connection assignment
0x1E	0x1A	XPT Map 0 Control 26	5:0	OUT 26 [5:0]	Output 26 connection assignment
0x1F	0x1B	XPT Map 0 Control 27	5:0	OUT 27 [5:0]	Output 27 connection assignment
0x20	0x1C	XPT Map 0 Control 28	5:0	OUT 28 [5:0]	Output 28 connection assignment
0x21	0x1D	XPT Map 0 Control 29	5:0	OUT 29 [5:0]	Output 29 connection assignment
0x22	0x1E	XPT Map 0 Control 30	5:0	OUT 30 [5:0]	Output 30 connection assignment
0x23	0x1F	XPT Map 0 Control 31	5:0	OUT 31 [5:0]	Output 31 connection assignment
0x24	0x20	XPT Map 0 Control 32	5:0	OUT 32 [5:0]	Output 32 connection assignment
0x25	0x21	XPT Map 0 Control 33	5:0	OUT 33 [5:0]	Output 33 connection assignment
0x26	0x22	XPT Map 0 Control 34	5:0	OUT 34 [5:0]	Output 34 connection assignment
0x27	0x23	XPT Map 0 Control 35	5:0	OUT 35 [5:0]	Output 35 connection assignment
0x28	0x24	XPT Map 0 Control 36	5:0	OUT 36 [5:0]	Output 36 connection assignment
0x29	0x25	XPT Map 0 Control 37	5:0	OUT 37[5:0]	Output 37 connection assignment
0x2A	0x26	XPT Map 0 Control 38	5:0	OUT 38 [5:0]	Output 38 connection assignment
0x2B	0x27	XPT Map 0 Control 39	5:0	OUT 39 [5:0]	Output 39 connection assignment

Address: Channel	Default	Register Name	Bits	Bit Name	Description
0x2C	0x27	XPT Map 1 Control 0	5:0	OUT 0 [5:0]	Output 0 connection assignment
0x2D	0x26	XPT Map 1 Control 1	5:0	OUT 1 [5:0]	Output 1 connection assignment
0x2E	0x25	XPT Map 1 Control 2	5:0	OUT 2 [5:0]	Output 2 connection assignment
0x2F	0x24	XPT Map 1 Control 3	5:0	OUT 3 [5:0]	Output 3 connection assignment
0x30	0x23	XPT Map 1 Control 4	5:0	OUT 4 [5:0]	Output 4 connection assignment
0x31	0x22	XPT Map 1 Control 5	5:0	OUT 5 [5:0]	Output 5 connection assignment
0x32	0x21	XPT Map 1 Control 6	5:0	OUT 6 [5:0]	Output 6 connection assignment
0x33	0x20	XPT Map 1 Control 7	5:0	OUT 7 [5:0]	Output 7 connection assignment
0x34	0x1F	XPT Map 1 Control 8	5:0	OUT 8 [5:0]	Output 8 connection assignment
0x35	0x1E	XPT Map 1 Control 9	5:0	OUT 9 [5:0]	Output 9 connection assignment
0x36	0x1D	XPT Map 1 Control 10	5:0	OUT 10 [5:0]	Output 10 connection assignment
0x37	0x1C	XPT Map 1 Control 11	5:0	OUT 11 [5:0]	Output 11 connection assignment
0x38	0x1B	XPT Map 1 Control 12	5:0	OUT 12 [5:0]	Output 12 connection assignment
0x39	0x1A	XPT Map 1 Control 13	5:0	OUT 13 [5:0]	Output 13 connection assignment
0x3A	0x19	XPT Map 1 Control 14	5:0	OUT 14 [5:0]	Output 14 connection assignment
0x3B	0x18	XPT Map 1 Control 15	5:0	OUT 15 [5:0]	Output 15 connection assignment
0x3C	0x17	XPT Map 1 Control 16	5:0	OUT 16 [5:0]	Output 16 connection assignment
0x3D	0x16	XPT Map 1 Control 17	5:0	OUT 17 [5:0]	Output 17 connection assignment
0x3E	0x15	XPT Map 1 Control 18	5:0	OUT 18 [5:0]	Output 18 connection assignment
0x3F	0x14	XPT Map 1 Control 19	5:0	OUT 19 [5:0]	Output 19 connection assignment
0x40	0x13	XPT Map 1 Control 20	5:0	OUT 20 [5:0]	Output 20 connection assignment
0x41	0x12	XPT Map 1 Control 21	5:0	OUT 21 [5:0]	Output 21 connection assignment
0x42	0x11	XPT Map 1 Control 22	5:0	OUT 22 [5:0]	Output 22 connection assignment
0x43	0x10	XPT Map 1 Control 23	5:0	OUT 23 [5:0]	Output 23 connection assignment
0x44	0x0F	XPT Map 1 Control 24	5:0	OUT 24 [5:0]	Output 24 connection assignment
0x45	0x0E	XPT Map 1 Control 25	5:0	OUT 25 [5:0]	Output 25 connection assignment
0x46	0x0D	XPT Map 1 Control 26	5:0	OUT 26 [5:0]	Output 26 connection assignment
0x47	0x0C	XPT Map 1 Control 27	5:0	OUT 27 [5:0]	Output 27 connection assignment
0x48	0x0B	XPT Map 1 Control 28	5:0	OUT 28 [5:0]	Output 28 connection assignment
0x49	0x0A	XPT Map 1 Control 29	5:0	OUT 29 [5:0]	Output 29 connection assignment
0x4A	0x09	XPT Map 1 Control 30	5:0	OUT 30 [5:0]	Output 30 connection assignment
0x4B	0x08	XPT Map 1 Control 31	5:0	OUT 31 [5:0]	Output 31 connection assignment
0x4C	0x07	XPT Map 1 Control 32	5:0	OUT 32 [5:0]	Output 32 connection assignment
0x4D	0x06	XPT Map 1 Control 33	5:0	OUT 33 [5:0]	Output 33 connection assignment
0x4E	0x05	XPT Map 1 Control 34	5:0	OUT 34 [5:0]	Output 34 connection assignment
0x4F	0x04	XPT Map 1 Control 35	5:0	OUT 35 [5:0]	Output 35 connection assignment
0x50	0x03	XPT Map 1 Control 36	5:0	OUT 36 [5:0]	Output 36 connection assignment
0x51	0x02	XPT Map 1 Control 37	5:0	OUT 37[5:0]	Output 37 connection assignment
0x52	0x01	XPT Map 1 Control 38	5:0	OUT 38 [5:0]	Output 38 connection assignment
0x53	0x00	XPT Map 1 Control 39	5:0	OUT 39 [5:0]	Output 39 connection assignment
0x54	0x00	XPT Status 0	5:0	OUT 0 [5:0]	Output 0 connection status
0x55	0x00	XPT Status 1	5:0	OUT 1 [5:0]	Output 1 connection status
0x56	0x00	XPT Status 2	5:0	OUT 2 [5:0]	Output 2 connection status
0x57	0x00	XPT Status 3	5:0	OUT 3 [5:0]	Output 3 connection status
0x58	0x00	XPT Status 4	5:0	OUT 4 [5:0]	Output 4 connection status
0x59	0x00	XPT Status 5	5:0	OUT 5 [5:0]	Output 5 connection status
0x5A	0x00	XPT Status 6	5:0	OUT 6 [5:0]	Output 6 connection status
0x5B	0x00	XPT Status 7	5:0	OUT 7 [5:0]	Output 7 connection status
0x5C	0x00	XPT Status 8	5:0	OUT 8 [5:0]	Output 8 connection status
0x5D	0x00	XPT Status 9	5:0	OUT 9 [5:0]	Output 9 connection status
0x5E	0x00	XPT Status 10	5:0	OUT 10 [5:0]	Output 10 connection status
0x5F	0x00	XPT Status 11	5:0	OUT 11 [5:0]	Output 11 connection status
0x60	0x00	XPT Status 12	5:0	OUT 12 [5:0]	Output 12 connection status

Address: Channel	Default	Register Name	Bits	Bit Name	Description
0x61	0x00	XPT Status 13	5:0	OUT 13 [5:0]	Output 13 connection status
0x62	0x00	XPT Status 14	5:0	OUT 14 [5:0]	Output 14 connection status
0x63	0x00	XPT Status 15	5:0	OUT 15 [5:0]	Output 15 connection status
0x64	0x00	XPT Status 16	5:0	OUT 16 [5:0]	Output 16 connection status
0x65	0x00	XPT Status 17	5:0	OUT 17 [5:0]	Output 17 connection status
0x66	0x00	XPT Status 18	5:0	OUT 18 [5:0]	Output 18 connection status
0x67	0x00	XPT Status 19	5:0	OUT 19 [5:0]	Output 19 connection status
0x68	0x00	XPT Status 20	5:0	OUT 20 [5:0]	Output 20 connection status
0x69	0x00	XPT Status 21	5:0	OUT 21 [5:0]	Output 21 connection status
0x6A	0x00	XPT Status 22	5:0	OUT 22 [5:0]	Output 22 connection status
0x6B	0x00	XPT Status 23	5:0	OUT 23 [5:0]	Output 23 connection status
0x6C	0x00	XPT Status 24	5:0	OUT 24 [5:0]	Output 24 connection status
0x6D	0x00	XPT Status 25	5:0	OUT 25 [5:0]	Output 25 connection status
0x6E	0x00	XPT Status 26	5:0	OUT 26 [5:0]	Output 26 connection status
0x6F	0x00	XPT Status 27	5:0	OUT 27 [5:0]	Output 27 connection status
0x70	0x00	XPT Status 28	5:0	OUT 28 [5:0]	Output 28 connection status
0x71	0x00	XPT Status 29	5:0	OUT 29 [5:0]	Output 29 connection status
0x72	0x00	XPT Status 30	5:0	OUT 30 [5:0]	Output 30 connection status
0x73	0x00	XPT Status 31	5:0	OUT 31 [5:0]	Output 31 connection status
0x74	0x00	XPT Status 32	5:0	OUT 32 [5:0]	Output 32 connection status
0x75	0x00	XPT Status 33	5:0	OUT 33 [5:0]	Output 33 connection status
0x76	0x00	XPT Status 34	5:0	OUT 34 [5:0]	Output 34 connection status
0x77	0x00	XPT Status 35	5:0	OUT 35 [5:0]	Output 35 connection status
0x78	0x00	XPT Status 36	5:0	OUT 36 [5:0]	Output 36 connection status
0x79	0x00	XPT Status 37	5:0	OUT 37[5:0]	Output 37 connection status
0x7A	0x00	XPT Status 38	5:0	OUT 38 [5:0]	Output 38 connection status
0x7B	0x00	XPT Status 39	5:0	OUT 39 [5:0]	Output 39 connection status
0x7D	0x00	XPT Headroom	0	XPT_HDROOM	0 = disabled, 1 = enabled (required when V_{CC} > 2.7 V)
0x80: Output 0	0x40	Tx Lane Control	7	Reserved	0 (Reserve bit)
0x81: Output 1	0x40	Tx Lane Control	6:4	OLEV [2:0]	000: 0 mA
0x82: Output 2	0x40	Tx Lane Control			001: 4 mA
0x83: Output 3	0x40	Tx Lane Control			010: 8 mA
0x84: Output 4	0x40	Tx Lane Control			011: 12 mA
0x85: Output 5	0x40	Tx Lane Control			100: 16 mA (default)
0x86: Output 6	0x40	Tx Lane Control			101: 20 mA
0x87: Output 7	0x40	Tx Lane Control			110: 24 mA
0x88: Output 8	0x40	Tx Lane Control			111: (Reserve bit)
0x89: Output 9	0x40	Tx Lane Control			
0x8A: Output 10	0x40	Tx Lane Control			
0x8B: Output 11	0x40	Tx Lane Control	3	Overdrive	1: overdrive (increases OLEV and PE currents by 25%)
0x8C: Output 12	0x40	Tx Lane Control			0: no overdrive (default)
0x8D: Output 13	0x40	Tx Lane Control			
0x8E Output 14	0x40	Tx Lane Control			
0x8F: Output 15	0x40	Tx Lane Control	2:0	PE [2:0]	000: 0 mA (default)
0x90: Output 16	0x40	Tx Lane Control			001: 2 mA
0x91: Output 17	0x40	Tx Lane Control			010: 3 mA
0x92: Output 18	0x40	Tx Lane Control			011: 4 mA
0x93: Output 19	0x40	Tx Lane Control			100: 5 mA
0x94: Output 20	0x40	Tx Lane Control			101: 6 mA
0x95: Output 21	0x40	Tx Lane Control			110: 7 mA
0x96: Output 22	0x40	Tx Lane Control			111: 8 mA
0x97: Output 23	0x40	Tx Lane Control			
0x98: Output 24	0x40	Tx Lane Control			

Address: Channel	Default	Register Name	Bits	Bit Name	Description
0x99: Output 25	0x40	Tx Lane Control			
0x9A: Output 26	0x40	Tx Lane Control			
0x9B: Output 27	0x40	Tx Lane Control			
0x9C: Output 28	0x40	Tx Lane Control			
0x9D: Output 29	0x40	Tx Lane Control			
0x9E: Output 30	0x40	Tx Lane Control			
0x9F: Output 31	0x40	Tx Lane Control			
0xA0: Output 32	0x40	Tx Lane Control			
0xA1: Output 33	0x40	Tx Lane Control			
0xA2: Output 34	0x40	Tx Lane Control			
0xA3: Output 35	0x40	Tx Lane Control			
0xA4: Output 36	0x40	Tx Lane Control			
0xA5: Output 37	0x40	Tx Lane Control			
0xA6: Output 38	0x40	Tx Lane Control			
0xA7: Output 39	0x40	Tx Lane Control			
0xA8: Tx Broadcast	0x40	Tx Lane Control			
0xA9	0x0	Tx Sign Control	7	TXSIGN [7]	Signal path polarity inversion Output 7 0 = noninverting 1 = inverting
			6	TXSIGN [6]	Signal path polarity inversion Output 6
			5	TXSIGN [5]	Signal path polarity inversion Output 5
			4	TXSIGN [4]	Signal path polarity inversion Output 4
			3	TXSIGN [3]	Signal path polarity inversion Output 3
			2	TXSIGN [2]	Signal path polarity inversion Output 2
			1	TXSIGN [1]	Signal path polarity inversion Output 1
			0	TXSIGN [0]	Signal path polarity inversion Output 0
0xAA	0x0	Tx Sign Control	7	TXSIGN [15]	Signal path polarity inversion Output 15
			6	TXSIGN [14]	Signal path polarity inversion Output 14
			5	TXSIGN [13]	Signal path polarity inversion Output 13
			4	TXSIGN [12]	Signal path polarity inversion Output 12
			3	TXSIGN [11]	Signal path polarity inversion Output 11
			2	TXSIGN [10]	Signal path polarity inversion Output 10
			1	TXSIGN [9]	Signal path polarity inversion Output 9
			0	TXSIGN [8]	Signal path polarity inversion Output 8
0xAB	0x0	Tx Sign Control	7	TXSIGN [23]	Signal path polarity inversion Output 23
			6	TXSIGN [22]	Signal path polarity inversion Output 22
			5	TXSIGN [21]	Signal path polarity inversion Output 21
			4	TXSIGN [20]	Signal path polarity inversion Output 20
			3	TXSIGN [19]	Signal path polarity inversion Output 19
			2	TXSIGN [18]	Signal path polarity inversion Output 18
			1	TXSIGN [17]	Signal path polarity inversion Output 17
			0	TXSIGN [16]	Signal path polarity inversion Output 16
0xAC	0x0	Tx Sign Control	7	TXSIGN [31]	Signal path polarity inversion Output 31
			6	TXSIGN [30]	Signal path polarity inversion Output 30
			5	TXSIGN [29]	Signal path polarity inversion Output 29
			4	TXSIGN [28]	Signal path polarity inversion Output 28
			3	TXSIGN [27]	Signal path polarity inversion Output 27
			2	TXSIGN [26]	Signal path polarity inversion Output 26
			1	TXSIGN [25]	Signal path polarity inversion Output 25
			0	TXSIGN [24]	Signal path polarity inversion Output 24

Address: Channel	Default	Register Name	Bits	Bit Name	Description
0xAD	0x0	Tx Sign Control	7	TXSIGN [39]	Signal path polarity inversion Output 39
			6	TXSIGN [38]	Signal path polarity inversion Output 38
			5	TXSIGN [37]	Signal path polarity inversion Output 37
			4	TXSIGN [36]	Signal path polarity inversion Output 36
			3	TXSIGN [35]	Signal path polarity inversion Output 35
			2	TXSIGN [34]	Signal path polarity inversion Output 34
			1	TXSIGN [33]	Signal path polarity inversion Output 33
			0	TXSIGN [32]	Signal path polarity inversion Output 32
0xB0	0x0	Tx Drive Control	7:6	TXEN [3]	Tx enable state Output 3 11 = enabled 10 = standby 01 = squelch 00 = disabled
			5:4	TXEN [2]	Tx enable state Output 2
			3:2	TXEN [1]	Tx enable state Output 1
			1:0	TXEN [0]	Tx enable state Output 0
0xB1	0x0	Tx Drive Control	7:6	TXEN [7]	Tx enable state Output 7 11 = enabled 10 = standby 01 = squelch 00 = disabled
			5:4	TXEN [6]	Tx enable state Output 6
			3:2	TXEN [5]	Tx enable state Output 5
			1:0	TXEN [4]	Tx enable state Output 4
0xB2	0x0	Tx Drive Control	7:6	TXEN [11]	Tx enable state Output 11 11 = enabled 10 = standby 01 = squelch 00 = disabled
			5:4	TXEN [10]	Tx enable state Output 10
			3:2	TXEN [9]	Tx enable state Output 9
			1:0	TXEN [8]	Tx enable state Output 8
0xB3	0x0	Tx Drive Control	7:6	TXEN [15]	Tx enable state Output 15 11 = enabled 10 = standby 01 = squelch 00 = disabled
			5:4	TXEN [14]	Tx enable state Output 14
			3:2	TXEN [13]	Tx enable state Output 13
			1:0	TXEN [12]	Tx enable state Output 12
0xB4	0x0	Tx Drive Control	7:6	TXEN [19]	Tx enable state Output 19 11 = enabled 10 = standby 01 = squelch 00 = disabled
			5:4	TXEN [18]	Tx enable state Output 18
			3:2	TXEN [17]	Tx enable state Output 17
			1:0	TXEN [16]	Tx enable state Output 16

Address: Channel	Default	Register Name	Bits	Bit Name	Description
0xB5	0x0	Tx Drive Control	7:6	TXEN [23]	Tx enable state Output 23 11 = enabled 10 = standby 01 = squelch 00 = disabled
			5:4	TXEN [22]	Tx enable state Output 22
			3:2	TXEN [21]	Tx enable state Output 21
			1:0	TXEN [20]	Tx enable state Output 20
0xB6	0x0	Tx Drive Control	7:6	TXEN [27]	Tx enable state Output 27 11 = enabled 10 = standby 01 = squelch 00 = disabled
			5:4	TXEN [26]	Tx enable state Output 26
			3:2	TXEN [25]	Tx enable state Output 25
			1:0	TXEN [24]	Tx enable state Output 24
0xB7	0x0	Tx Drive Control	7:6	TXEN [31]	Tx enable state Output 31 11 = enabled 10 = standby 01 = squelch 00 = disabled
			5:4	TXEN [30]	Tx enable state Output 30
			3:2	TXEN [29]	Tx enable state Output 29
			1:0	TXEN [28]	Tx enable state Output 28
0xB8	0x0	Tx Drive Control	7:6	TXEN [35]	Tx enable state Output 35 11 = enabled 10 = standby 01 = squelch 00 = disabled
			5:4	TXEN [34]	Tx enable state Output 34
			3:2	TXEN [33]	Tx enable state Output 33
			1:0	TXEN [32]	Tx enable state Output 32
0xB9	0x0	Tx Drive Control	7:6	TXEN [39]	Tx enable state Output 39 11 = enabled 10 = standby 01 = squelch 00 = disabled
			5:4	TXEN [38]	Tx enable state Output 38
			3:2	TXEN [37]	Tx enable state Output 37
			1:0	TXEN [36]	Tx enable state Output 36
0xBA	Write Only	Tx Drive Control	7:6	TXENBC [39]	Tx enable state broadcast 11 = enabled 10 = standby 01 = squelch 00 = disabled
0xBB	0x0	Tx Headroom	0	TX_HDROOM	0 = disabled, 1 = enabled (required when V_{CC} > 2.7 V)

Address: Channel	Default	Register Name	Bits	Bit Name	Description
0xBC	0x0	Tx Termination Control	4	TXA_TERM [19:16]	Output[19:16] (B side) termination control 0: terminations enabled 1: terminations disabled
			3	TXA_TERM [15:12]	Output[15:12] (B side) termination control
			2	TXA_TERM [11:8]	Output[11:8] (B side) termination control
			1	TXA_TERM [7:4]	Output[7:4] (B side) termination control
			0	TXA_TERM [3:0]	Output[3:0] (B side) termination control
0xBD	0x0	Tx Termination Control	4	TXB_TERM [39:36]	Output[39:36] (B side) termination control 0: terminations enabled 1: terminations disabled
			3	TXB_TERM [35:32]	Output[35:32] (B side) termination control
			2	TXB_TERM [31:28]	Output[31:28] (B side) termination control
			1	TXB_TERM [27:24]	Output[27:24] (B side) termination control
			0	TXB_TERM [23:20]	Output[23:20] (B side) termination control
0xC0	0x0	Rx EQ Control	7:6	RXEQIN [3]	Equalizer boost control for Input 3 11 = 12 dB 10 = 6 dB 01 = 3 dB 00 = disabled
			5:4	RXEQIN [2]	Equalizer boost control for Input 2
			3:2	RXEQIN [1]	Equalizer boost control for Input 1
			1:0	RXEQIN [0]	Equalizer boost control for Input 0
0xC1	0x0	Rx EQ Control	7:6	RXEQIN [7]	Equalizer boost control for Input 7 11 = 12 dB 10 = 6 dB 01 = 3 dB 00 = disabled
			5:4	RXEQIN [6]	Equalizer boost control for Input 6
			3:2	RXEQIN [5]	Equalizer boost control for Input 5
			1:0	RXEQIN [4]	Equalizer boost control for Input 4
0xC2	0x0	Rx EQ Control	7:6	RXEQIN [11]	Equalizer boost control for Input 11 11 = 12 dB 10 = 6 dB 01 = 3 dB 00 = disabled
			5:4	RXEQIN [10]	Equalizer boost control for Input 10
			3:2	RXEQIN [9]	Equalizer boost control for Input 9
			1:0	RXEQIN [8]	Equalizer boost control for Input 8
0xC3	0x0	Rx EQ Control	7:6	RXEQIN [15]	Equalizer boost control for Input 15 11 = 12 dB 10 = 6 dB 01 = 3 dB 00 = disabled
			5:4	RXEQIN [14]	Equalizer boost control for Input 14
			3:2	RXEQIN [13]	Equalizer boost control for Input 13
			1:0	RXEQIN [12]	Equalizer boost control for Input 12

Address: Channel	Default	Register Name	Bits	Bit Name	Description
0xC4	0x0	Rx EQ Control	7:6	RXEQIN [19]	Equalizer boost control for Input 19 11 = 12 dB 10 = 6 dB 01 = 3 dB 00 = disabled
			5:4	RXEQIN [18]	Equalizer boost control for Input 18
			3:2	RXEQIN [17]	Equalizer boost control for Input 17
			1:0	RXEQIN [16]	Equalizer boost control for Input 16
0xC5	0x0	Rx EQ Control	7:6	RXEQIN [23]	Equalizer boost control for Input 23 11 = 12 dB 10 = 6 dB 01 = 3 dB 00 = disabled
			5:4	RXEQIN [22]	Equalizer boost control for Input 22
			3:2	RXEQIN [21]	Equalizer boost control for Input 21
			1:0	RXEQIN [20]	Equalizer boost control for Input 20
0xC6	0x0	Rx EQ Control	7:6	RXEQIN [27]	Equalizer boost control for Input 27 11 = 12 dB 10 = 6 dB 01 = 3 dB 00 = disabled
			5:4	RXEQIN [26]	Equalizer boost control for Input 26
			3:2	RXEQIN [25]	Equalizer boost control for Input 25
			1:0	RXEQIN [24]	Equalizer boost control for Input 24
0xC7	0x0	Rx EQ Control	7:6	RXEQIN [31]	Equalizer boost control for Input 31 11 = 12 dB 10 = 6 dB 01 = 3 dB 00 = disabled
			5:4	RXEQIN [30]	Equalizer boost control for Input 30
			3:2	RXEQIN [29]	Equalizer boost control for Input 29
			1:0	RXEQIN [28]	Equalizer boost control for Input 28
0xC8	0x0	Rx EQ Control	7:6	RXEQIN [35]	Equalizer boost control for Input 35 11 = 12 dB 10 = 6 dB 01 = 3 dB 00 = disabled
			5:4	RXEQIN [34]	Equalizer boost control for Input 34
			3:2	RXEQIN [33]	Equalizer boost control for Input 33
			1:0	RXEQIN [32]	Equalizer boost control for Input 32
0xC9	0x0	Rx EQ Control	7:6	RXEQIN [39]	Equalizer boost control for Input 39 11 = 12 dB 10 = 6 dB 01 = 3 dB 00 = disabled
			5:4	RXEQIN [38]	Equalizer boost control for Input 38
			3:2	RXEQIN [37]	Equalizer boost control for Input 37
			1:0	RXEQIN [36]	Equalizer boost control for Input 36
0xCA	0x0	Rx EQ Control	1:0	RXEQIN BC	Equalizer boost control for all inputs 11 = 12 dB 10 = 6 dB 01 = 3 dB 00 = disabled

Address: Channel	Default	Register Name	Bits	Bit Name	Description
0xCB	0x0	Rx Sign Control	7	RXSIGN [7]	Signal path polarity inversion Input 7
			6	RXSIGN [6]	Signal path polarity inversion Input 6
			5	RXSIGN [5]	Signal path polarity inversion Input 5
			4	RXSIGN [4]	Signal path polarity inversion Input 4
			3	RXSIGN [3]	Signal path polarity inversion Input 3
			2	RXSIGN [2]	Signal path polarity inversion Input 2
			1	RXSIGN [1]	Signal path polarity inversion Input 1
			0	RXSIGN [0]	Signal path polarity inversion Input 0
0xCC	0x0	Rx Sign Control	7	RXSIGN [15]	Signal path polarity inversion Input 15
			6	RXSIGN [14]	Signal path polarity inversion Input 14
			5	RXSIGN [13]	Signal path polarity inversion Input 13
			4	RXSIGN [12]	Signal path polarity inversion Input 12
			3	RXSIGN [11]	Signal path polarity inversion Input 11
			2	RXSIGN [10]	Signal path polarity inversion Input 10
			1	RXSIGN [9]	Signal path polarity inversion Input 9
			0	RXSIGN [8]	Signal path polarity inversion Input 8
0xCD	0x0	Rx Sign Control	7	RXSIGN [23]	Signal path polarity inversion Input 23
			6	RXSIGN [22]	Signal path polarity inversion Input 22
			5	RXSIGN [21]	Signal path polarity inversion Input 21
			4	RXSIGN [20]	Signal path polarity inversion Input 20
			3	RXSIGN [19]	Signal path polarity inversion Input 19
			2	RXSIGN [18]	Signal path polarity inversion Input 18
			1	RXSIGN [17]	Signal path polarity inversion Input 17
			0	RXSIGN [16]	Signal path polarity inversion Input 16
0xCE	0x0	Rx Sign Control	7	RXSIGN [31]	Signal path polarity inversion Input 31
			6	RXSIGN [30]	Signal path polarity inversion Input 30
			5	RXSIGN [29]	Signal path polarity inversion Input 29
			4	RXSIGN [28]	Signal path polarity inversion Input 28
			3	RXSIGN [27]	Signal path polarity inversion Input 27
			2	RXSIGN [26]	Signal path polarity inversion Input 26
			1	RXSIGN [25]	Signal path polarity inversion Input 25
			0	RXSIGN [24]	Signal path polarity inversion Input 24
0xCF	0x0	Rx Sign Control	7	RXSIGN [39]	Signal path polarity inversion Input 39
			6	RXSIGN [38]	Signal path polarity inversion Input 38
			5	RXSIGN [37]	Signal path polarity inversion Input 37
			4	RXSIGN [36]	Signal path polarity inversion Input 36
			3	RXSIGN [35]	Signal path polarity inversion Input 35
			2	RXSIGN [34]	Signal path polarity inversion Input 34
			1	RXSIGN [33]	Signal path polarity inversion Input 33
			0	RXSIGN [32]	Signal path polarity inversion Input 32
0xD0	0x0	Rx Termination Control	4	RXA_TERM [19:16]	Input[19:16] (A Side) termination control 0: termination control enabled 1: termination control disabled
			3	RXA_TERM [15:12]	Input [15:12] (A side) termination control
			2	RXA_TERM [11:8]	Input [11:8] (A side) termination control
			1	RXA_TERM [7:4]	Input [7:4] (A side) termination control
			0	RXA_TERM [3:0]	Input [3:0] (A side) termination control

Address: Channel	Default	Register Name	Bits	Bit Name	Description
0xD1	0x0	Rx Termination Control	4	RXB_TERM [39:36]	Input [39:36] (B Side) termination control 0: terminations enabled 1: terminations disabled
			3	RXB_TERM [35:32]	Input [35:32] (B Side) termination control
			2	RXB_TERM [31:28]	Input [31:28] (B Side) termination control
			1	RXB_TERM [27:24]	Input [27:24] (B Side) termination control
			0	RXB_TERM [23:20]	Input [23:20] (B Side) termination control

APPLICATIONS INFORMATION

The ADN4605 is an asynchronous and protocol agnostic digital switch and, therefore, is applicable to a wide range of applications including network routing and digital video switching. The ADN4605 supports the data rates and signaling levels of HDMI®, DVI®, DisplayPort and SD-, HD-, and 3G-SDI digital video. The ADN4605 can be used to create matrix switches. An example block diagram of a 40 × 40 matrix switch is shown in Figure 50. Since HDMI, DVI, and DisplayPort are quad lane protocols, four ADN4605 s are used to create a full 40 × 40 matrix switch. Smaller arrays, such as 10 × 10 and 20 × 20, require one and two ADN4605 devices, respectively. Proper high speed PCB design techniques should be used to maintain the signal integrity of the high data rate signals. It is important to minimize the lane-to-lane skew and crosstalk in these applications.

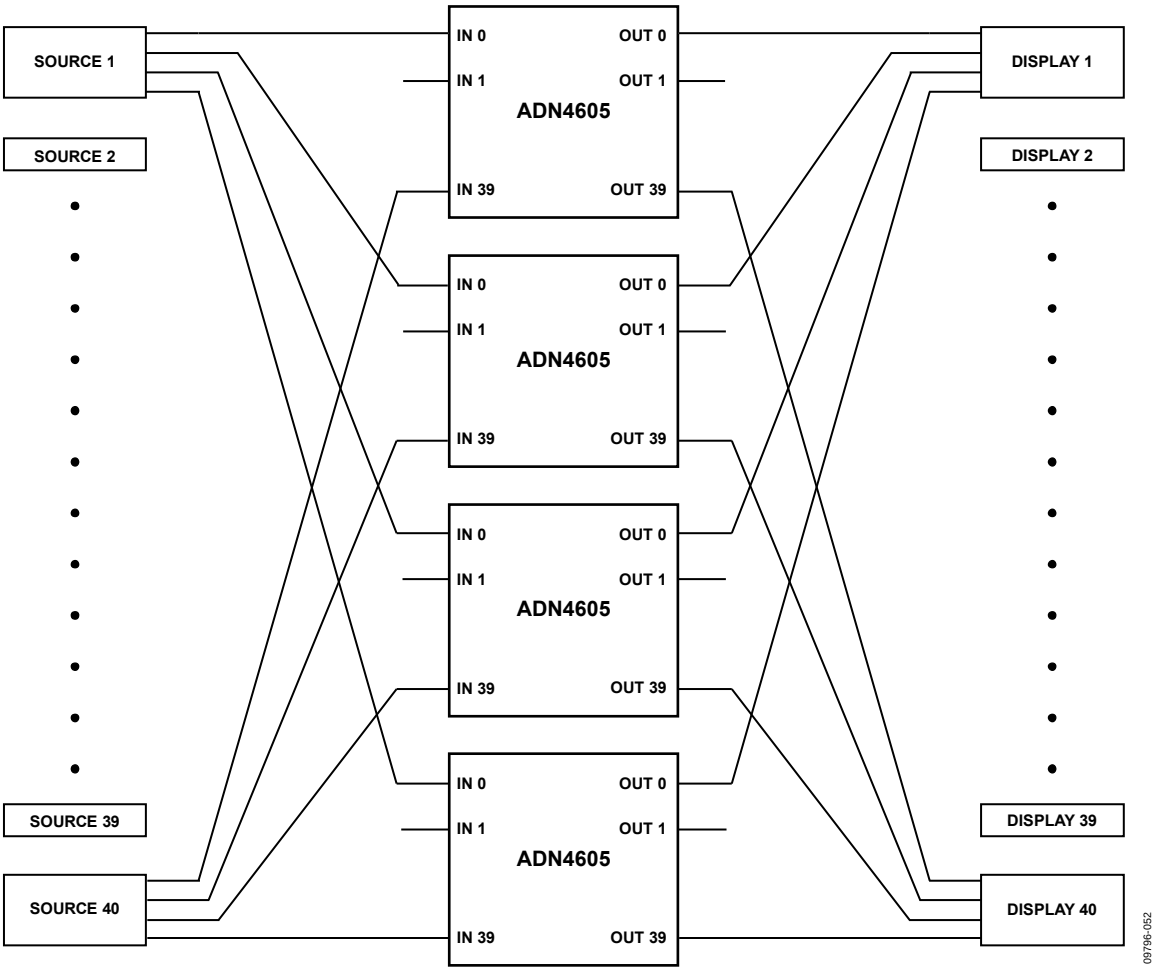

Figure 50. ADN4605 Digital Video (DVI, HDMI, Display Port) Matrix Switch Block Diagram

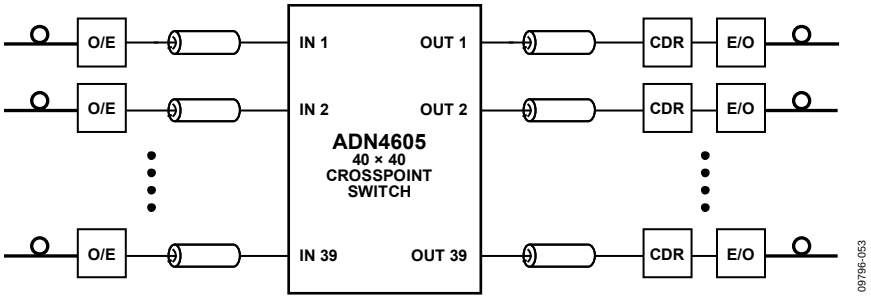

Figure 51. ADN4605 Networking Switch Application Block Diagram

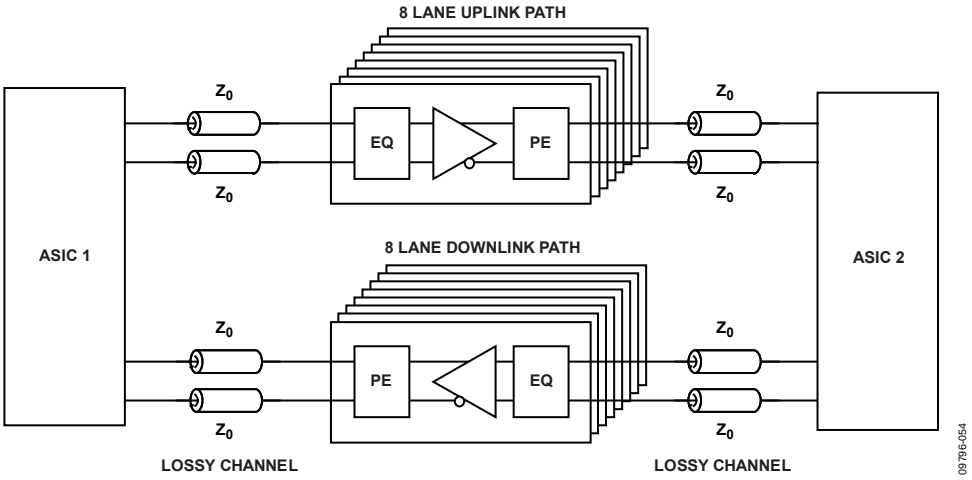

Figure 52. Multilane Signal Conditioning Application Diagram

SUPPLY SEQUENCING

Ideally, all power supplies should be brought up to the appropriate levels simultaneously (power supply requirements are set by the supply limits in Table 1 and the absolute maximum ratings listed in Table 6.

If the power supplies to the ADN4605 are brought up separately, the supply power-up sequence is as follows: DV_{CC} powered first, followed by V_{CC}, and, last the termination supplies (V_{TTIA}, V_{TTIB}, V_{TTOA}, and V_{TTOB}).

The power-down sequence is reversed with termination supplies being powered off first. The termination supplies contain ESD protection diodes to the V_{CC} power domain. To avoid a sustained high current condition in these devices, the V_{TTIx} and V_{TTOx} supplies should be powered on after V_{CC} and should be powered off before V_{CC}.

If the system power supplies have a high impedance in the powered off state, then supply sequencing is not required provided the following limits are observed:

- Peak current from V_{TTIx}or V_{TTOx} to V_{CC} < 200 mA
- Sustained current from V_{TTIx} or V_{TTOx} to V_{CC} < 100 mA

POWER DISSIPATION

The power dissipation of the ADN4605 depends on the supply voltages, I/O coupling type, and device configuration. The input termination resistors dissipate power depending on the differential input swing and common-mode voltage. When ac-coupled, the common-mode voltage is equal to the termination supply voltage (V_{TTIx} or V_{TTOx}). While the current drawn from the input termination supply is effectively zero, there is still power and heat dissipated in the termination resistors as a result of the differential signal swing. The core supply current and output termination current are strongly dependent on device configuration, such as the number of channels enabled, output level setting, and output preemphasis setting.

In high ambient temperature operating conditions, it is important to avoid exceeding the maximum junction temperature of the device. Limiting the total power dissipation can be achieved by the following:

- Reducing the output swing
- Reducing the preemphasis level
- Decreasing the supply voltages within the allowable ranges defined in Table 1
- Disabling unused channels

Alternatively, the thermal resistance can be reduced by

- Adding an external heat sink
- Increasing the airflow

Refer to the PCB Layout Guidelines section for recommendations for proper thermal stencil layout and fabrication.

OUTPUT COMPLIANCE

In low voltage applications, users must pay careful attention to both the differential and common-mode signal levels. The choice of output voltage swing, preemphasis setting, supply voltages (V_{CC} and V_{TTOx}), and output coupling (ac or dc) affect peak and settled single-ended voltage swings and the common-mode shift measured across the output termination resistors. These choices also affect output current and, consequently, power consumption.

Table 21 shows the change in output common mode ($\Delta V_{OCM} = V_{CC} - V_{OCM}$) with output level and preemphasis setting. Single-ended output levels are calculated for V_{TTOx} supplies of 3.3 V and 2.5 V to illustrate practical challenges of reducing the supply voltage. The minimum V_L (min V_L) cannot be below the absolute minimum level specified in Table 1.

Since the absolute minimum output voltage specified in Table 1 is relative to V_{CC}, decreasing V_{CC} is required to maintain the output levels within the specified limits when lower output termination voltages are required. V_{TTOx} voltages as low as 1.8 V are allowable for output swings less than or equal to 400 mV (single-ended).

Figure 53 illustrates an application where the ADN4605 is used as a dc-coupled level translator to interface a 3.3 V CML driver to an ASIC with 1.8 V I/Os. The diode in series with V_{CC} reduces the voltage at V_{CC} for improved output compliance.

TX/XPT HEADROOM

The Tx Headroom and XPT Headroom registers are provided to improve the output compliance range of the ADN4605 when the core supply voltage (V_{CC}) is greater than 2.7 V. Enabling the XPT Headroom and Tx Headroom registers allows the transmitter an extra 300 mV of output compliance. The headroom circuitry should not be enabled when the core supply voltage (V_{CC}) is less than or equal to 2.7 V.

When set to 1, the XPT Headroom (Address 0x7D) and Tx Headroom (Address 0xBB) registers are enabled for all transmitter outputs. A value of 0 disables the headroom generating circuitry. Note that both registers (XPT Headroom and Tx Headroom) must be set for the headroom circuitry to function properly.

Example: V_{CC} = 3.3 V, V_{TTOx} = 2.5 V

In a typical application, the user can select a default output level of 200 mV single-ended (400 mVp-p differential) and may want the option to choose preemphasis settings of 0 dB and 9.5 dB.

With preemphasis disabled, a dc-coupled transmitter causes a 100 mV common-mode shift across the termination resistors, whereas an ac-coupled transmitter causes twice the common-mode shift. When dc-coupled, the single-ended output voltage swings between 2.5 V and 2.3 V and between 2.4 V and 2.2 V when ac-coupled. In both cases, these levels are greater than the minimum V_L limit of 1.9 V ($V_L = V_{CC} - 1.4$ V).

With a PE setting of 9.5 dB, the ac-coupled transmitter has single-ended swings from 2.2 V and 1.6 V, whereas the dc-coupled transmitter outputs swing between 2.5 V and 1.9 V. The minimum single-ended output voltage ($V_{L\text{-}PE}$) of the ac-coupled transmitter case exceeds the minimum V_L limit of 1.9 V by 300 mV, violating the device specification.

Enabling the TX_HDROOM and XPT_HDROOM bit lowers the minimum V_L limit by approximately 300 mV to 1.6 V. This transmitter configuration now complies with the output voltage range specification.

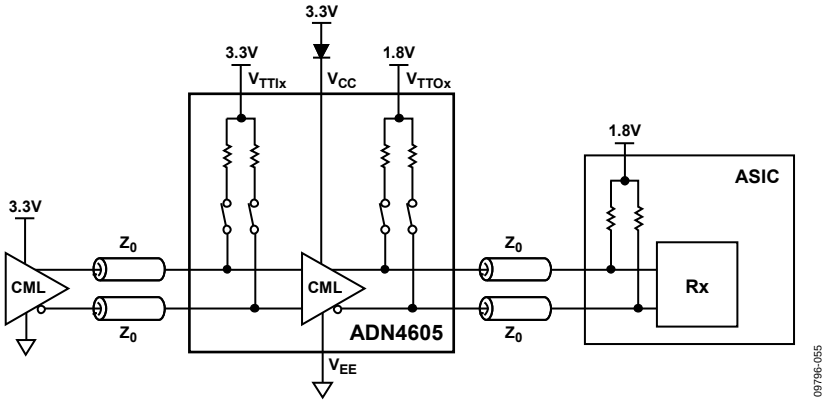

Figure 53. DC-Coupled Level Translator Application Circuit

Table 21. Output Voltage Range and Output Common-Mode Shift vs. Output Level and PE Setting

Single-Ended Output Levels and PE Boost				Tx Lane Control Register Settings		Output Current	AC-Coupled Outputs					DC-Coupled Outputs				
								$V_{CC} = V_{TTO} =$ 3.3 V		$V_{CC} = V_{TTO} =$ 2.5 V			$V_{CC} = V_{TTO} =$ 3.3 V		$V_{CC} = V_{TTO} =$ 2.5 V	
V_{SW-DC}[1] (mV)	V_{SW-PE}[1] (mV)	PE Boost %	PE (dB)	OLEV [2:0]	PE [2:0]	I_{TTO}[1] (mA)	ΔV_{OCM}[1] (mV)	V_{H-PE}[1] (V)	V_{L-PE}[1] (V)	V_{H-PE}[1] (V)	V_{L-PE}[1] (V)	ΔV_{OCM}[1] (mV)	V_{H-PE}[1] (V)	V_{L-PE}[1] (V)	V_{H-PE}[1] (V)	V_{L-PE}[1] (V)
100	100	0.00	0.00	0x01	0x00	4	100	3.25	3.15	2.45	2.35	50	3.3	3.2	2.5	2.4
100	300	200.00	9.54	0x02	0x03	12	300	3.15	2.85	2.35	2.05	150	3.3	3.0	2.5	2.2
100	500	400.00	13.98	0x03	0x07	20	500	3.05	2.55	2.25	1.75	250	3.3	2.8	2.5	2.0
150	250	66.67	4.44	0x02	0x01	10	250	3.175	2.925	2.375	2.125	125	3.3	3.15	2.5	2.25
150	450	200.00	9.54	0x03	0x05	18	450	3.075	2.625	2.275	1.825	225	3.3	2.85	2.5	2.05
200	200	0.00	0.00	0x02	0x00	8	200	3.2	3.0	2.40	2.20	100	3.3	3.1	2.5	2.3
200	400	100.00	6.02	0x03	0x03	16	400	3.1	2.7	2.30	1.90	200	3.3	2.9	2.5	2.1
200	600	200.00	9.54	0x04	0x07	24	600	3	2.4	2.20	1.60	300	3.3	2.7	2.5	1.9
250	350	40.00	2.92	0x03	0x01	14	350	3.125	2.775	2.325	1.975	175	3.3	2.95	2.5	2.15
250	550	200.00	6.85	0x04	0x05	22	550	3.025	2.475	2.225	1.675	275	3.3	2.75	2.5	1.95
300	300	0.00	0.00	0x03	0x00	12	300	3.15	2.85	2.35	2.05	150	3.3	3.0	2.5	2.2
300	500	66.67	4.44	0x04	0x03	20	500	3.05	2.55	2.25	1.75	250	3.3	2.8	2.5	2.0
300	700	133.33	7.36	0x05	0x07	28	700	2.95	2.25	2.15	1.45	350	3.3	2.6	2.5	1.8
350	450	28.57	2.18	0x04	0x01	18	450	3.075	2.625	2.275	1.825	225	3.3	2.85	2.5	2.05
350	650	85.71	5.38	0x05	0x05	26	650	2.975	2.325	2.175	1.525	325	3.3	2.65	2.5	1.85
400	400	0.00	0.00	0x04	0x00	16	400	3.1	2.7	2.3	1.9	200	3.3	2.9	2.5	2.1
400	600	50.00	3.52	0x05	0x03	24	600	3.0	2.4	2.2	1.6	300	3.3	2.7	2.5	1.9
400	800	100.00	6.02	0x06	0x07	32	800	2.9	2.1	2.1	1.3	400	3.3	2.5	2.5	1.7
450	550	22.22	1.74	0x05	0x01	22	550	3.025	2.475	2.225	1.675	275	3.3	2.75	2.5	1.95
450	750	66.67	4.44	0x06	0x05	30	750	2.925	2.175	2.125	1.375	375	3.3	2.55	2.5	1.75
500	500	0.00	0.00	0x05	0x00	20	500	3.05	2.55	2.25	1.75	250	3.3	2.8	2.5	2.0
500	700	40.00	2.92	0x06	0x03	28	700	2.95	2.25	2.15	1.45	350	3.3	2.6	2.5	1.8
550	650	18.18	1.45	0x06	0x01	26	650	2.975	2.325	2.175	1.525	325	3.3	2.65	2.5	1.85
600	600	0.00	0.00	0x06	0x00	24	600	3.0	2.4	2.2	1.6	300	3.3	2.7	2.5	1.9

[1] Symbol definitions are shown in Table 16.

PCB LAYOUT GUIDELINES

The high speed differential inputs and outputs should be routed with 100 Ω controlled impedance differential transmission lines. The transmission lines, either microstrip or stripline, should be referenced to a solid low impedance reference plane. An example of a PCB cross-section is shown in Figure 54. The trace width (W), differential spacing (S), height above reference plane (H), and dielectric constant of the PCB material determine the characteristic impedance. Adjacent channels should be kept apart by a distance greater than 3 W to minimize crosstalk.

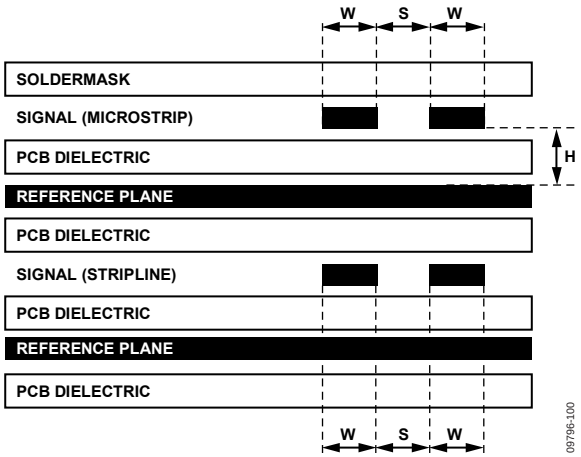

Figure 54. Example of a PCB Cross Section

OUTLINE DIMENSIONS

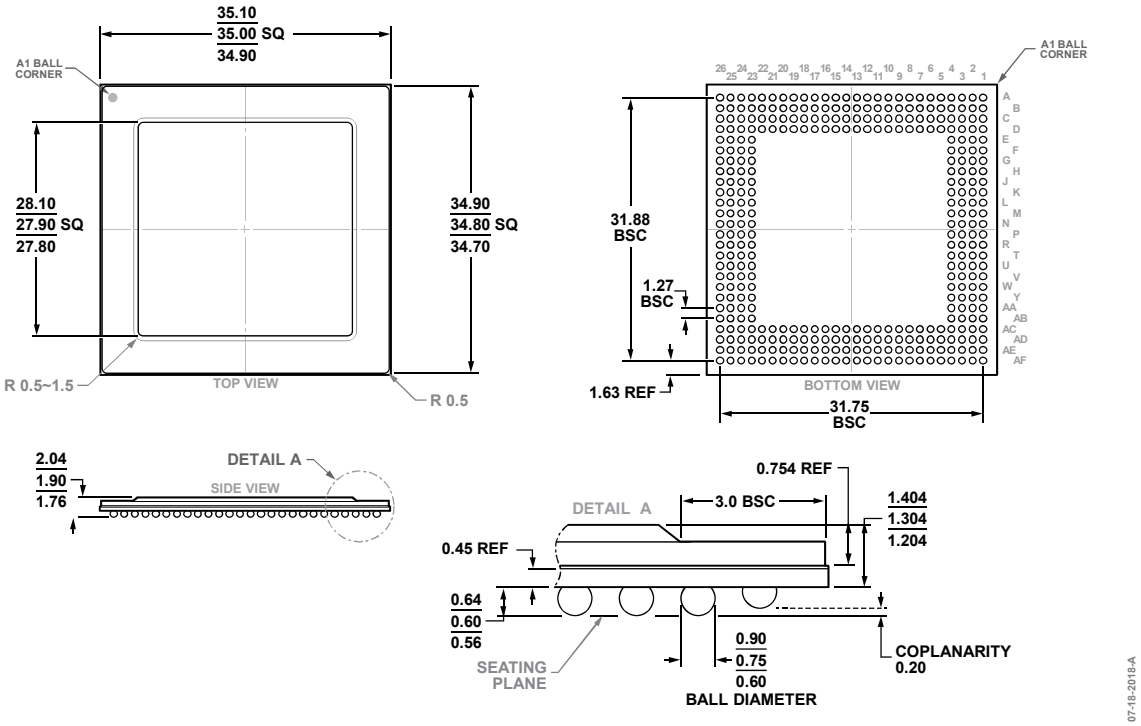

Figure 55. 352-Ball Ball Grid Array, Thermally Enhanced [BGA_ED] (BP-352-2)
Dimensions shown in millimeters

ORDERING GUIDE

Model[1]	Temperature Range	Package Description	Package Option
ADN4605ABPZ	−40°C to +85°C	352-Ball Ball Grid Array, Thermally Enhanced [BGA_ED]	BP-352-2
ADN4605-EVALZ		Evaluation Board	

[1]Z = RoHS Compliant Part.

NOTES

I²C refers to a communications protocol originally developed by Philips Semiconductors (now NXP Semiconductors).

HDMI, the HDMI Logo, and High-Definition Multimedia Interface are trademarks or registered trademarks of HDMI Licensing LLC in the United States and other countries.

©2011–2019 Analog Devices, Inc. All rights reserved. Trademarks and registered trademarks are the property of their respective owners.
D09796-0-7/19(B)

Mouser Electronics

Authorized Distributor

Click to View Pricing, Inventory, Delivery & Lifecycle Information:

Analog Devices Inc.:

ADN4605ABPZ ADN4605-EVALZ