EiceDRIVER™ Boost

Booster for Automotive Applications

1EBN1001AE

Single Channel Booster for Inverter Systems

Final Datasheet

Hardware Description
Rev. 3.0, 2015-04-30

ATV HP EDT

Edition 2015-04-30

Published by
Infineon Technologies AG
81726 Munich, Germany

© 2015 Infineon Technologies AG
All Rights Reserved.

Legal Disclaimer

The information given in this document shall in no event be regarded as a guarantee of conditions or characteristics. With respect to any examples or hints given herein, any typical values stated herein and/or any information regarding the application of the device, Infineon Technologies hereby disclaims any and all warranties and liabilities of any kind, including without limitation, warranties of non-infringement of intellectual property rights of any third party.

Information

For further information on technology, delivery terms and conditions and prices, please contact the nearest Infineon Technologies Office (**www.infineon.com**).

Warnings

Due to technical requirements, components may contain dangerous substances. For information on the types in question, please contact the nearest Infineon Technologies Office.

Infineon Technologies components may be used in life-support devices or systems only with the express written approval of Infineon Technologies, if a failure of such components can reasonably be expected to cause the failure of that life-support device or system or to affect the safety or effectiveness of that device or system. Life support devices or systems are intended to be implanted in the human body or to support and/or maintain and sustain and/or protect human life. If they fail, it is reasonable to assume that the health of the user or other persons may be endangered.

Revision History	
Page or Item	**Subjects (major changes since previous revision)**
Rev. 3.0, 2015-04-30	
Page 12	Updated **Figure 2-2**.
Page 13	Updated **Table 3-1**.
Page 15	Updated **Figure 3-1**.
Page 17	Updated **Table 3-4**.
Page 18	Updated **Table 3-7** (parameter R_{PIN15}).
Page 18	Updated **Table 3-8** (parameter H_{FETOFF}, V_{TOFFDP} and V_{ACLIDP}).
Page 20	Updated **Table 3-9** (parameter t_{ACLI}, t_{ASC_ON}, t_{ASC_OFF}).
Rev. 2.1, 2014-07-25	
All	All sections updated

Trademarks of Infineon Technologies AG

AURIX™, C166™, CanPAK™, CIPOS™, CIPURSE™, EconoPACK™, CoolMOS™, CoolSET™, CORECONTROL™, CROSSAVE™, DAVE™, EasyPIM™, EconoBRIDGE™, EconoDUAL™, EconoPIM™, EiceDRIVER™, eupec™, FCOS™, HITFET™, HybridPACK™, I²RF™, ISOFACE™, IsoPACK™, MIPAQ™, ModSTACK™, my-d™, NovalithIC™, OptiMOS™, ORIGA™, PRIMARION™, PrimePACK™, PrimeSTACK™, PRO-SIL™, PROFET™, RASIC™, ReverSave™, SatRIC™, SIEGET™, SINDRION™, SIPMOS™, SmartLEWIS™, SOLID FLASH™, TEMPFET™, thinQ!™, TRENCHSTOP™, TriCore™.

Other Trademarks

Advance Design System™ (ADS) of Agilent Technologies, AMBA™, ARM™, MULTI-ICE™, KEIL™, PRIMECELL™, REALVIEW™, THUMB™, µVision™ of ARM Limited, UK. AUTOSAR™ is licensed by AUTOSAR development partnership. Bluetooth™ of Bluetooth SIG Inc. CAT-iq™ of DECT Forum. COLOSSUS™, FirstGPS™ of Trimble Navigation Ltd. EMV™ of EMVCo, LLC (Visa Holdings Inc.). EPCOS™ of Epcos AG. FLEXGO™ of Microsoft Corporation. FlexRay™ is licensed by FlexRay Consortium. HYPERTERMINAL™ of Hilgraeve Incorporated. IEC™ of Commission Electrotechnique Internationale. IrDA™ of Infrared Data Association Corporation. ISO™ of INTERNATIONAL ORGANIZATION FOR STANDARDIZATION. MATLAB™ of MathWorks, Inc. MAXIM™ of Maxim Integrated Products, Inc. MICROTEC™, NUCLEUS™ of Mentor Graphics Corporation. Mifare™ of NXP. MIPI™ of MIPI Alliance, Inc. MIPS™ of MIPS Technologies, Inc., USA. muRata™ of MURATA MANUFACTURING CO., MICROWAVE OFFICE™ (MWO) of Applied Wave Research Inc., OmniVision™ of OmniVision Technologies, Inc. Openwave™ Openwave Systems Inc. RED HAT™ Red Hat, Inc. RFMD™ RF Micro Devices, Inc. SIRIUS™ of Sirius Satellite Radio Inc. SOLARIS™ of Sun Microsystems, Inc. SPANSION™ of Spansion LLC Ltd. Symbian™ of Symbian Software Limited. TAIYO YUDEN™ of Taiyo Yuden Co. TEAKLITE™ of CEVA, Inc. TEKTRONIX™ of Tektronix Inc. TOKO™ of TOKO KABUSHIKI KAISHA TA. UNIX™ of X/Open Company Limited. VERILOG™, PALLADIUM™ of Cadence Design Systems, Inc. VLYNQ™ of Texas Instruments Incorporated. VXWORKS™, WIND RIVER™ of WIND RIVER SYSTEMS, INC. ZETEX™ of Diodes Zetex Limited.

Last Trademarks Update 2011-02-24

Table of Contents

Table of Contents 4

List of Figures 5

List of Tables 6

1 Product Definition 7
1.1 Overview 7
1.2 Feature Overview 7
1.3 Target Applications 8

2 Functional Description 9
2.1 Introduction 9
2.2 Pin Configuration and Functionality 10
2.2.1 Pin Configuration 10
2.2.2 Pin Functionality 11
2.3 Block Diagram 12

3 Specification 13
3.1 Application Circuit 13
3.2 Absolute Maximum Ratings 16
3.3 Operating range 17
3.4 Thermal Characteristics 17
3.5 Electrical Characteristics 18
3.5.1 I/O Electrical Characteristics 18
3.5.2 Switching Characteristics 20

4 Package Information 21

List of Figures

Figure 2-1 Pin Configuration 10
Figure 2-2 Block Diagram 12
Figure 3-1 Application example 15
Figure 4-1 Package Outlines 21
Figure 4-2 Recommended Footprint (all dimensions in mm) 22

List of Tables

Table 2-1 Pin Configuration 10
Table 3-1 Component Values 13
Table 3-2 Absolute Maximum Ratings 16
Table 3-3 Operating Conditions 17
Table 3-4 Thermal characteristics 17
Table 3-5 Power Supply Current 18
Table 3-6 Electrical Characteristics for Pins: DACLP, ASC 18
Table 3-7 Electrical Characteristics for Pins TONI, TOFFI 18
Table 3-8 Electrical Characteristics for Pins: TONO, TOFFO, ACLI 18
Table 3-9 Switching Characteristics 20

1 Product Definition

1.1 Overview

The 1EBN1001AE is an IGBT / MOSFET Gate Driver Booster designed for automotive motor drives above 10kW.

The 1EBN1001AE is based on high performance bipolar technology and aims at replacing buffer stages based on discrete devices. Because of its thermally optimized exposed pad package, the 1EBN1001AE is able to drive and sink peak currents up to 15 A. This makes this device suitable for most inverter systems in automotive applications.

Next to the basic gate driving functions, the 1EBN1001AE also supports advanced functions such as active clamping (with external diode) with fast reaction time. The active clamping function can also be inhibited via an external signal.

Additional features are also implemented in order to ease the implementation of Active Short Circuit (ASC) strategies and make the device suitable for safety related systems up to ASIL D (as per IEC 61508 and ISO 26262). The 1EBN1001AE can be used optimally with Infineon's 2nd generation of Gate Driver IC such as the 1EDI200xAS "EiceSIL".

1.2 Feature Overview

The following features are supported by the 1EBN1001AE:

- Single Channel IGBT / MOSFET Gate Driver Booster.
- Suitable for IGBT classes up to 650 V / 800A and 1200 V / 400A.
- Peak current up to I_{PK} = +/- 15A (for 1.5µs).
- Continuous current up to I_{CONT} = 2 x 0.75 Arms at 10 kHz (C_{LOAD}=300nF).
- Low propagation delay and minimal PWM distortion.
- Separate turn-on and turn-off signals pathes.
- Support for Active Clamping with very fast reaction time.
- Active Clamping Disable and ASC Input signals.
- Support for negative turn-off bias.
- Optimal support of EiceSIL functions.
- 14-pin PG-DSO-14 exposed pad green package.
- Operational ambient temperature range from -40°C to 125°C.
- Automotive qualified (as per AEC Q100).
- Suitable for systems up to ASIL D requirements (as per IEC 61508 and ISO 26262).

Product Name	Ordering Code	Package
1EBN1001AE	SP001002438	PG-DSO-14

1.3 Target Applications

- Inverters for automotive Hybrid Vehicles (HEV) and Electric Vehicles (EV).
- High Voltage DC/DC converter.
- Industrial Drive.

2 Functional Description

2.1 Introduction

The 1EBN1001AE is an advanced bipolar single channel IGBT gate driver booster that can also be used for driving power MOS devices. The device has been developed in order to optimize the design of high performance safety relevant automotive systems.

The turn-on and turn-off behavior of the IGBT is controlled via 2 pairs of pin: TONI and TOFFI which are connected to the gate driver, and TONO and TOFFO connected to the gate resistances of the IGBT. The structure of the output stage is basically that of an emitter-follower circuit, where the voltage at pin TONO (resp. TOFFO) follows the voltage at pin TONI (resp. TOFFI). The 1EBN1001AE is capable of driving up to 400mm^2 of IGBT area, with a typical peak sink and source current capability of 15A.

The active clamping input ACLI allows an external active clamping circuit to turn on the IGBT in case of overvoltage conditions detected on the IGBT. The active clamping function can be disabled in run time via pin DACLP.

The input ASC aims at turning on the IGBT in case the system decides to set the motor in Active Short Circuit. An active ASC signal overrules the inputs signals TONI and TOFFI.

During normal operation, the input of the device TONI and TOFFI are driven with input signals having same polarity. Driving actively TONI and TOFFI with opposite voltages(e.g. TONI at 15V and TOFFI at -8V) may lead, depending on the signal configuration, to irreversible damage to the device. It should be ensured at system level that such case do not happen (e.g. by setting the gate driver in tristate mode).

The internal Short Circuit Protection (SCP) prevents in the device the generation of short circuits in case TONI and/or TOFFI is floating.

2.2 Pin Configuration and Functionality

2.2.1 Pin Configuration

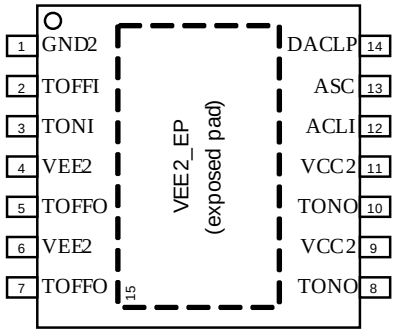

Figure 2-1 Pin Configuration

Table 2-1 Pin Configuration

Pin Number	Symbol	I/O	Voltage Class	Function
1	GND2	Ground	Ground	Ground
2	TOFFI	Input	15V	Turn-Off Input
3	TONI	Input	15V	Turn-On Input
4, 6	VEE2	Supply	Supply	Negative Power Supply
5, 7	TOFFO	Output	15V	Turn-Off Output
8, 10	TONO	Output	15V	Turn-On Output
9, 11	VCC2	Supply	Supply	Positive Power Supply
12	ACLI	Input	15V	Active Clamping Request Input
13	ASC	Input	5V	Active Short Circuit Input
14	DACLP	Input	5V	Active Clamping Disable Input
15	VEE2_EP	n/a	n/a	Thermal Pad, can be left open or connected to VEE2[1].

1) This pad is aimed at thermal coupling. Supply current shall flow through pins 4 and 6.

2.2.2 Pin Functionality

VEE2, VEE2_EP

Negative power supply, referring to GND2.

VCC2

Positive power supply side, referring to GND2.

GND2

Reference ground.

TONI

Input pin for turning on the IGBT. An internal weak pull-down resistance ties this signal to V_{EE2} in case it is open.

TOFFI

Input pin for turning off the IGBT. An internal weak pull-down resistance ties this signal to V_{EE2} in case it is open.

ASC

Active short circuit input, used by the external circuit to turn on the booster. This signal is high active. An internal weak pull-down resistance ties this signal to GND2 reference in case it is open. The ASC signal overrules the commands at pins TONI and TOFFI.

DACLP

Input pin used to disable the active clamping function of the booster. This signal is high active. An internal weak pull-up resistance ties this signal to an internal 5V reference in case it is open.

ACLI

Active clamping request input pin, used by the external active clamping circuit to turn on the booster.

TONO

Output pin for turning on the IGBT.

TOFFO

Output pin for turning off the IGBT.

2.3 Block Diagram

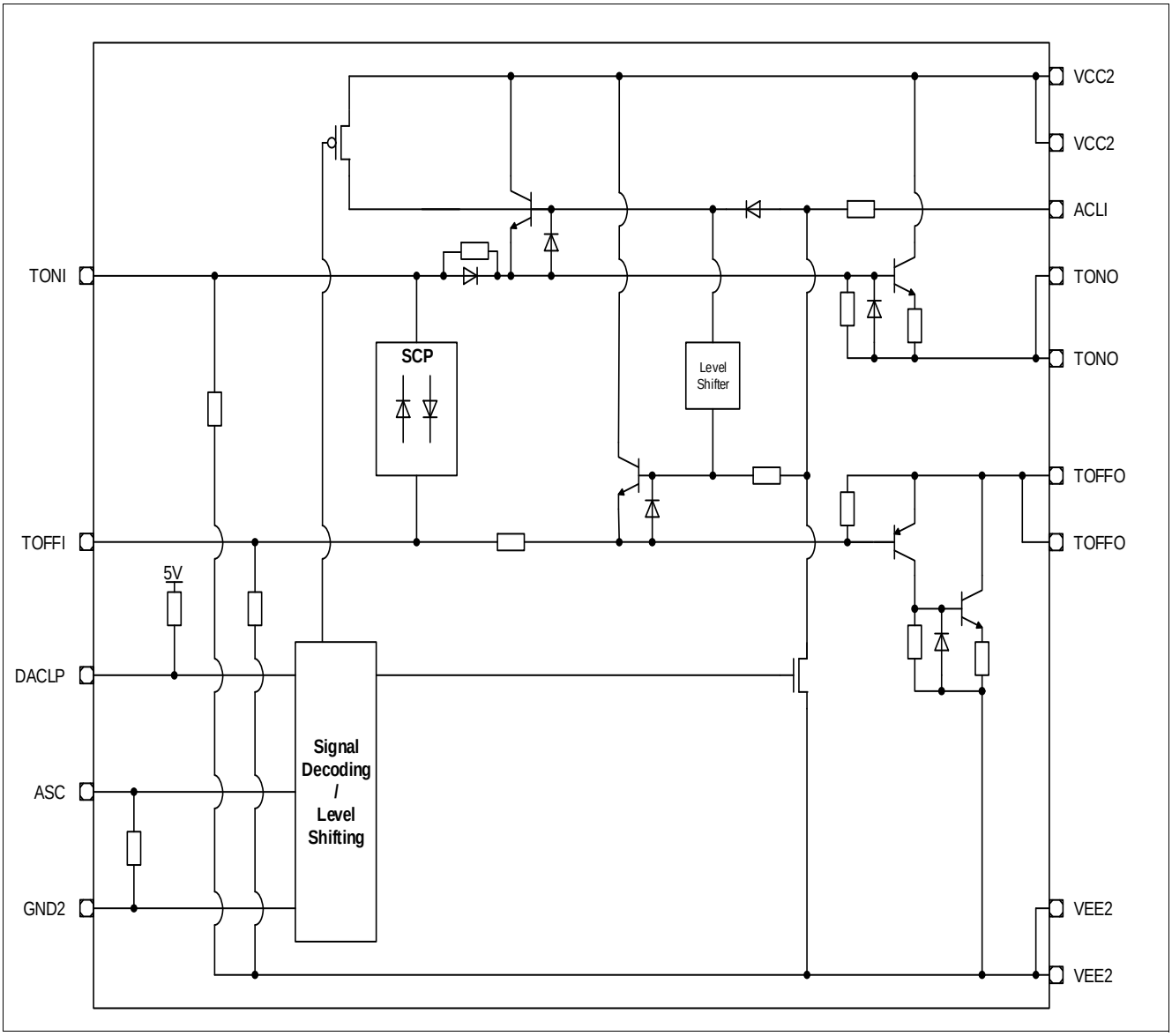

Figure 2-2 Block Diagram

3 Specification

3.1 Application Circuit

Table 3-1 Component Values

Parameter	Symbol	Values			Unit	Note / Test Condition
		Min.	Typ.	Max.		
Decoupling Capacitance (Between VEE2 and GND2)	C_d	2 x 0.5	11	-	µF	10µF capacitance next to the power supply source (e.g. flyback converter). 1 µF close to the device. It is strongly recommended to have at least two capacitances close to the device (e.g. 2 x 500nF).
Decoupling Capacitance (Between VCC2 and GND2)	C_d	-	11	-	µF	10µF capacitance next to the power supply source (e.g. flyback converter). 1 µF close to the device.
Decoupling Capacitance (Between VCC1 and GND1)	C_d	-	11	-	µF	10µF capacitance next to the power supply source (e.g. flyback converter). 1 µF close to the device.
Series Resistance	R_{s1}	0	1	-	kΩ	
Pull-up Resistance	R_{pu1}	-	10	-	kΩ	
Filter Resistance	R_1	-	1	-	kΩ	
Filter Capacitance	C_1	-	47	-	pF	
Reference Resistance	R_{ref1}	-	26.7[1)]	-	kΩ	high accuracy, as close as possible to the device
Reference Capacitance	C_{ref1}	-	100	-	pF	As close as possible to the device.
Pull-up Resistance	R_{pu2}	-	10	-	kΩ	
Reference Resistance	R_{ref2}	-	23.7	-	kΩ	high accuracy, as close as possible to the device
Reference Capacitance	C_{ref2}	-	100	-	pF	As close as possible to the device.
DESAT filter Resistance	R_{desat}	1	3		kΩ	Depends on required response time.
DESAT filter Capacitance	C_{desat}		n/a		nF	Depends on required response time.
DESAT Diode	D_{desat}	-	n/a	-	-	HV diode, type tbd
OSD Filter Resistance	R_{osd}	-	1	-	kΩ	
OSD Filter Capacitance	C_{osd}	-	47	-	pF	
Sense Resistance	R_{sense}	-	n/a	-	Ω	Depends on IGBT specification.

Table 3-1 Component Values (cont'd)

Parameter	Symbol	Values			Unit	Note / Test Condition
		Min.	Typ.	Max.		
OCP filter Resistance	R_{ocp}	-	n/a	-	Ω	Depends on required response time.
OCP filter Capacitance	C_{ocp}	-	n/a	-	nF	Depends on required response time.
OCPG Resistance	R_{ocpg}	0	-	100	nF	Depends on required response time.
DACLP filter Resistance	R_{daclp}	-	1	-	kΩ	
DACLP filter Capacitance	C_{daclp}	-	470	-	pF	
NUV2 Filter Resistance	R_2	-	n/a	-	Ω	Depends on required response time.
NUV2 Filter Capacitance	C_2	-	-	100	pF	
Active Clamping Resistance	R_{acl1}	-	n/a	-	Ω	Depends on application requirements
Active Clamping Resistance	R_{acl2}	-	n/a	-	kΩ	Depends on application requirements
Active Clamping Capacitance	C_{acli}	-	n/a	-	nF	Depends on application requirements
TVS Diode	$D_{tvsacl1}$, $D_{tvsacl2}$	-	n/a	-	-	Depends on application requirements
Active Clamping Diode	D_{acl}	-	n/a	-	-	Depends on application requirements
ACLI Clamping Diode	D_{acl2}	-	n/a	-	-	Depends on application requirements
VREG Capacitance	C_{vreg}		1		µF	As close as possible to the device.
Gate Resistance	R_{gon}	0.5	-	-	Ω	
Gate Resistance	R_{goff}	0.5	-	-	Ω	
Gate Clamping Diode	D_{gcl1}	-	n/a	-	-	2)
Gate Clamping Diode	D_{gcl2}	-	n/a	-	-	E.g. Schottky Diode type tbd. 2)
Gate Series Resistance	R_{gate}	0	10	-	Ω	Optional component
VEE2 Clamping Diode	D_{gcl3}	-	n/a	-	-	E.g. Schottky Diode type tbd. 2)

1) 26.1 kOhm can also be used

2) Need of this components is application specific.

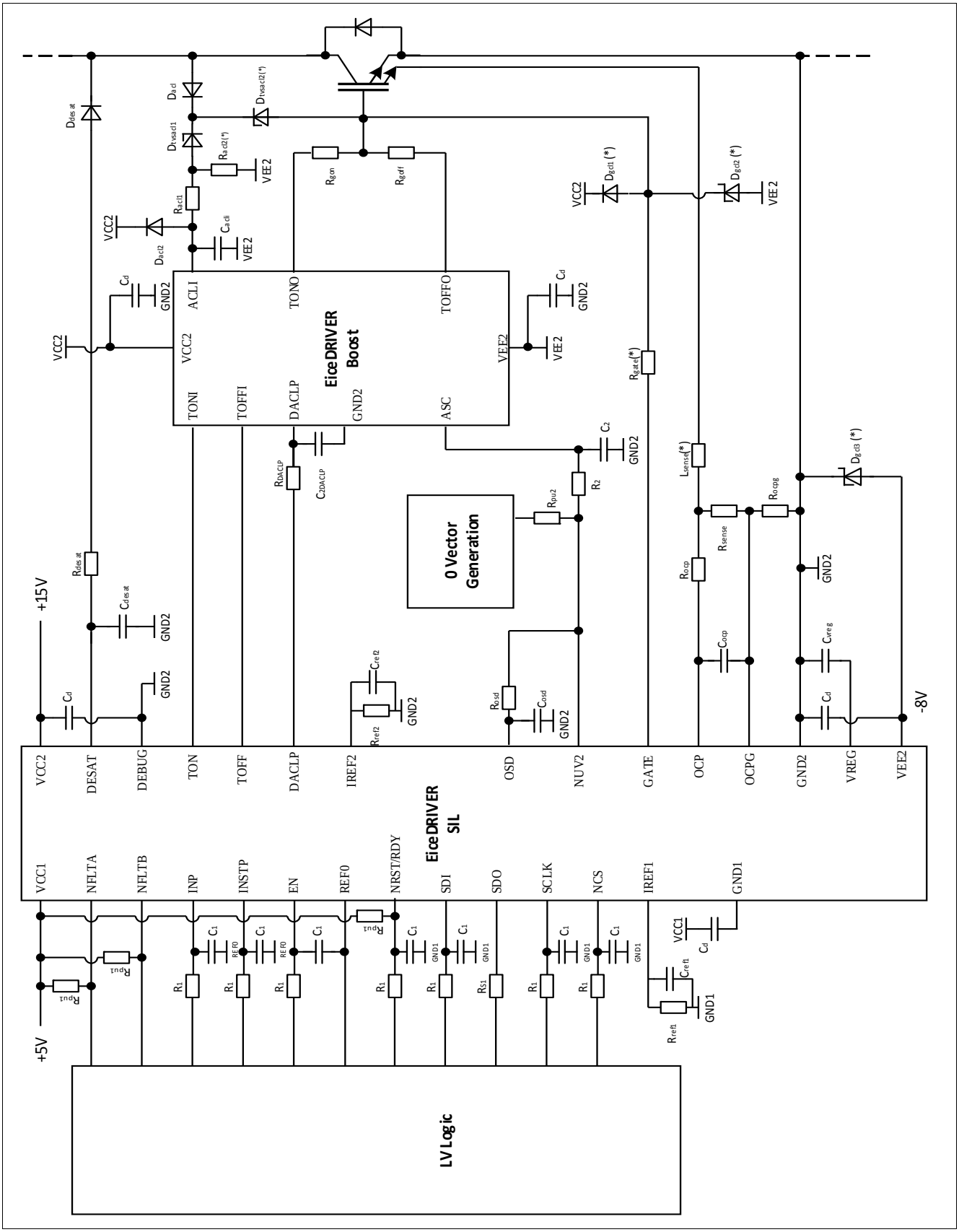

Figure 3-1 Application example

3.2 Absolute Maximum Ratings

Stress above the maximum values listed here may cause permanent damage to the device. Exposure to absolute maximum rating conditions for extended periods may affect device reliability.

Table 3-2 Absolute Maximum Ratings[1)]

Parameter	Symbol	Values			Unit	Note / Test Condition
		Min.	Typ.	Max.		
Junction temperature	T_{JUNC}	-40	-	150	°C	
Storage temperature	T_{STO}	-55	-	150	°C	
Positive power supply	V_{CC2}	-0.3	-	28	V	Referenced to GND2
Negative power supply	V_{EE2}	-13	-	0.3	V	Referenced to GND2
Power supply voltage difference (secondary) V_{CC2}-V_{EE2}	V_{DS2}	-	-	40	V	
Voltage on class 5V pins	V_{IN5}	-0.3	-	6.5	V	Referenced to GND2
Voltage on class 15V pins.	V_{IN15}	V_{EE2}-0.3	-	V_{CC2}+0.3	V	Referenced to GND2
Input current on class 5V pins	I_{IN5}	-	-	1.0	mA	
Input/Output Current on pin TONI, TOFFI	I_{TI15}	-200	-	200	mA	DC current
		-2.0	-	2.0	A	Peak current for 1.5µs
Input/Output Current on pin TONO, TOFFO	I_{TO15}	-200	-	200	mA	DC current
		-15.0	-	15.0	A	Peak current for 1.5µs
Input Current on pin ACLI	I_{ACLIN}	-	-	10.0	mA	Peak Current for 1.5 µs
Cross current between TONI and TOFFI	I_{CCI}	-	-	300	mA	Peak Current for 6 µs
ESD Immunity	V_{ESD}	-	-	2	kV	HBM[2)]
		-	-	500	V	CDM[3)]
MSL Level	MSL	n.a.	3	n.a.		

1) Not subject to production test. Absolute maximum Ratings are verified by design / characterization.
2) According to EIA/JESD22-A114-B.
3) According to JESD22-C101-C.

3.3 Operating range

The following operating conditions must not be exceeded in order to ensure correct operation of the 1EBN1001AE. All parameters specified in the following sections refer to these operating conditions, unless otherwise noticed.

Table 3-3 Operating Conditions

Parameter	Symbol	Values			Unit	Note / Test Condition
		Min.	Typ.	Max.		
Ambient temperature	T_{AMB}	-40	-	125	°C	
Junction temperature	T_{JUNC}	-40	-	150	°C	
Positive power supply (secondary)	V_{CC2}	13.0	15.0	18.0	V	Referenced to GND2
Negative power supply	V_{EE2}	-10.0	-8.0	-5.0	V	Referenced to GND2
PWM switching frequency	f_{sw}	-	-	30	kHz	1)

1) Maximum junction temperature of the device must no be exceeded.

3.4 Thermal Characteristics

The indicated parameters apply to the full operating range, unless otherwise specified.

Table 3-4 Thermal characteristics

Parameter	Symbol	Values			Unit	Note / Test Condition
		Min.	Typ.	Max.		
Thermal Resistance Junction to Ambient	R_{THJA}	-	25	-	K/W	T_{amb}=25°C[1)]
Thermal Resistance Junction to Case bottom	R_{THJCB}	-	-	0.8	K/W	T_{amb}=25°C[1)]
Thermal Resistance Junction to Case top	R_{THJCT}	-	-	40	K/W	T_{amb}=25°C[1)]

1) Not subject to production test. This parameter is verified by design / characterization.

3.5 Electrical Characteristics

The indicated electrical parameters apply to the full operating range, unless otherwise specified.

3.5.1 I/O Electrical Characteristics

Table 3-5 Power Supply Current

Parameter	Symbol	Values			Unit	Note / Test Condition
		Min.	Typ.	Max.		
V_{CC2} bias current	I_{CC2}	-	1.6	3.1	mA	T_{amb}=25°C,V_{cc2}=20V, V_{EE2}=-10V, all pins open
V_{EE2} bias current	I_{EE2}	-	1.3	2.8	mA	T_{amb}=25°C,V_{cc2}=20V, V_{EE2}=-10, all pins open
V_{CC2} steady state current with ASC active	I_{CC2_ASC}	-	12.6	22	mA	T_{amb}=25°C,V_{cc2}=20V, V_{EE2}=-10V, V_{ASC}=5V, all other pins open
V_{EE2} steady state current with ASC active t	I_{EE2_ASC}	-	6.3	11	mA	T_{amb}=25°C,V_{cc2}=20V, V_{EE2}=-10V, V_{ASC}=5V, all other pins open

Table 3-6 Electrical Characteristics for Pins: DACLP, ASC

Parameter	Symbol	Values			Unit	Note / Test Condition
		Min.	Typ.	Max.		
Low Input Voltage	V_{IN5L}	0	-	1.5	V	Referenced to GND2
High Input Voltage	V_{IN5H}	3.5	-	5.5	V	Referenced to GND2
Input Voltage Hysteresis	$V_{IN5HYST}$	0.4	0.9	-	V	
Input pull-up / pull-down resistance (5V pin)	R_{PIN5}	30	52	81	kΩ	

Table 3-7 Electrical Characteristics for Pins TONI, TOFFI

Parameter	Symbol	Values			Unit	Note / Test Condition
		Min.	Typ.	Max.		
Input pull-up / pull-down resistance (15V pin)	R_{PIN15}	30	50	90	kΩ	T_{amb}=25°C

Table 3-8 Electrical Characteristics for Pins: TONO, TOFFO, ACLI

Parameter	Symbol	Values			Unit	Note / Test Condition
		Min.	Typ.	Max.		
TONO static forward current transfer ratio	H_{FETON}	10	40	70		V_{TONI}= V_{CC2}, I_{TONO}=100mA
TONO transistor static ON-state voltage drop	V_{TONDP}	0.3	0.7	1.0	V	V_{TONI}= V_{CC2}=15V, I_{TONO}=10mA

Table 3-8 Electrical Characteristics for Pins: TONO, TOFFO, ACLI (cont'd)

Parameter	Symbol	Values			Unit	Note / Test Condition
		Min.	Typ.	Max.		
TOFFO static forward current transfer ratio	H_{FETOFF}	7	15	30		V_{TOFFI}= V_{EE2}, I_{TOFFO}=100mA
TOFFO transistor static ON-state voltage drop	V_{TOFFDP}	0.2	0.7	1.0	V	V_{TOFFI}= V_{EE2}=-8V, V_{CC2}=15V, I_{TOFFO}=10mA
Peak source current at TONO	$I_{ON15PK2}$	-	-	15	A	Duration 1.5µs, C_{Last}=300nF, T_{amb}=125°C, 1)
Peak sink current at TOFFO	$I_{OF15PK2}$	-15	-		A	Duration 1.5µs, C_{Last}=300nF, T_{amb}=125°C, 1)
Effective RMS source current at TONO	$I_{ON15EF2}$	-	-	0.75	A	C_{Last}=300nF, T_{amb}=125°C, f_{sw}=10kHz, 1)
EffectiveRMS sink current at TOFFO	$I_{OF15EF2}$	-0.75	-	-	A	C_{Last}=300nF, T_{amb}=125°C, f_{sw}=10kHz, 1)
ACLI transistor static ON-state voltage drop (to TONO)	V_{ACLIDP}	1.2	2.3	3.0	V	V_{ACLI}= V_{CC2}=15V, I_{TONO}=10mA

1) Verified by design / characterization, not subject to production test.

3.5.2 Switching Characteristics

Table 3-9 Switching Characteristics

Parameter	Symbol	Values			Unit	Note / Test Condition
		Min.	Typ.	Max.		
Input to Output Propagation Delay ON	t_{PDON}	-	10	-	ns	V_{CC2}=15V, V_{EE2}=0V, Tamb=25°C,dV_{in}=5V step, R_{LOAD}=150Ohm
Input to Output Propagation Delay OFF	t_{PDOFF}	-	10	-	ns	V_{CC2}=15V, V_{EE2}=0V, Tamb=25°C, dV_{in}=5V step, R_{LOAD}=100Ohm
Input to Output Propagation Delay Distortion	$t_{PDDISTO}$	-10	-	10	ns	V_{CC2}=15V, V_{EE2}=-8V, Tamb=25°C [1)]
Turn-Off time	t_{TOOFF}	-	-	70	ns	V_{CC2}=15V, V_{EE2}=-8V, C_{LOAD} = 300 nF, dV_{out} = 1V, Tamb=25°C[1)]
Rise Time	t_{RISE}	-	50	-	ns	V_{CC2}=15V, V_{EE2}=-8V, C_{LOAD} =10 nF, 10%-90% transition, Tamb=25°C[1)]
Fall Time	t_{FALL}	-	90	-	ns	V_{CC2}=15V, V_{EE2}=-8V, C_{LOAD} = 10 nF, 90%-10% transition, Tamb=25°C, [1)]
Active clamping reaction time	t_{ACLI}	-	40	90	ns	V_{CC2}=15V, V_{EE2}=0V, dV_{out}=1V, R_{LOAD}=150Ohm
ASC turn-on reaction time	t_{ASC_ON}	-	80	200	ns	V_{CC2}=10V, V_{EE2}=0V, dV_{out}=1V, R_{LOAD}=150Ohm
ASC turn-off reaction time	t_{ASC_OFF}	-	500	1300	ns	V_{CC2}=10V, V_{EE2}=0V, dV_{out}=1V, R_{LOAD}=150Ohm

1) Verified by design / characterization. Not subject to production test.

4 Package Information

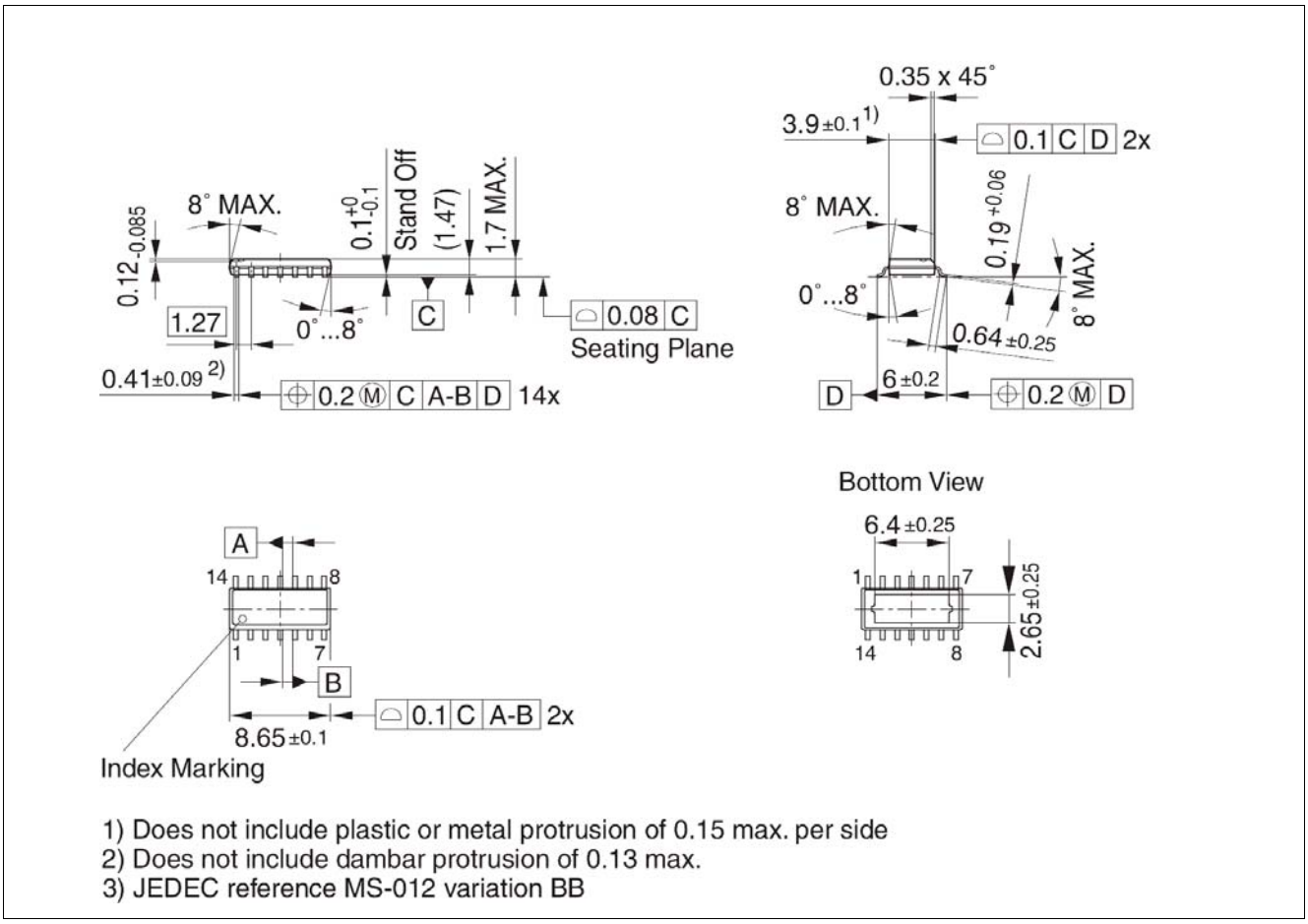

Figure 4-1 Package Outlines

The typical footprint shown **Figure 4-2** can be used:

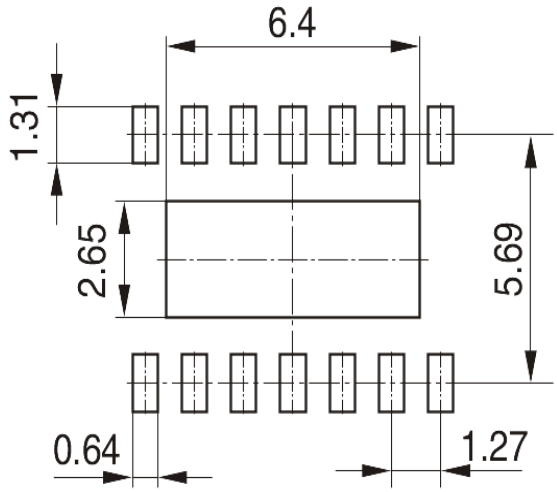

Figure 4-2 Recommended Footprint (all dimensions in mm)

Note: Depending on the application requirements, some thermally optimized footprint might be needed on PCB.

w w w . i n f i n e o n . c o m

Published by Infineon Technologies AG

Mouser Electronics

Authorized Distributor

Click to View Pricing, Inventory, Delivery & Lifecycle Information:

Infineon:

1EBN1001AEXUMA1 1EBN1001AE