EDCA1 – 1200V Core Adapter Board

Designed for use with the 2ASC-12A1HP SiC Driver Core

Overview

The AgileSwitch EDCA1 – 1200V Core Adapter Board is meant to serve as an evaluation tool for designers looking to design in the AgileSwitch 2ASC-12A1HP SiC Driver Core with the Rohm E/G Type Modules. The combination can serve as a Plug & Play Driver evaluation tool.

Key Adapter Board Features

- UL Compliant - 1200V SiC MOSFET Modules
- Dual-Channel
- Robust High-Noise-Immunity Design
- Plug & Play for Rohm E/G Type SiC Modules

Applications

- Evaluation Tool

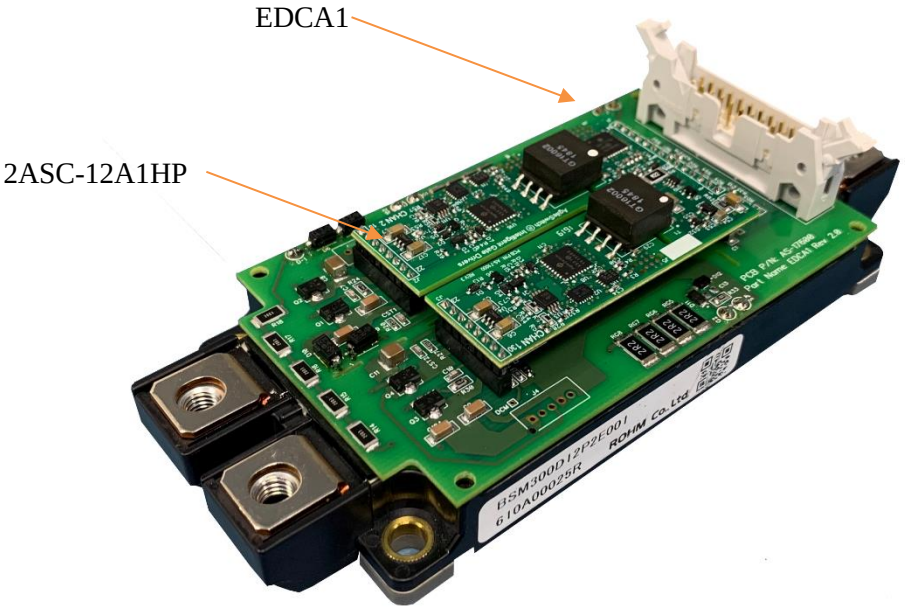

 © 2020 AgileSwitch, LLC

Contents

System Overview 3
Absolute Maximum Ratings 3
Electrical Characteristics 4
Interconnects 5
Mounting of Core Assembly on Adapter Board 6
Recommended Interface Circuitry 7
Schematic 9
Bill of Materials 11
Layout 12
Important Precautions 14
Mechanical Dimensions 15
Revisions 15
Legal Disclaimer 16

 © 2020 AgileSwitch, LLC

System Overview

The basic topology of the driver core is shown in Figure 1.

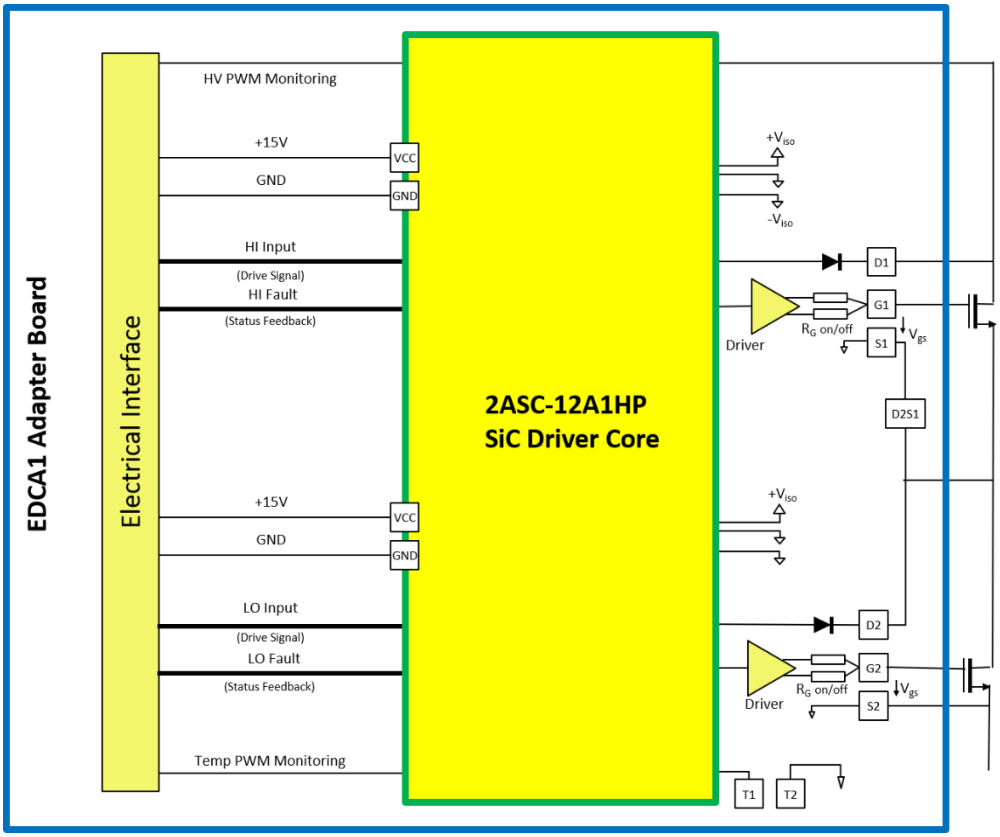

Figure 1 EDCA1 Adapter Board Basic Topology

Absolute Maximum Ratings

Interaction of maximum ratings is dependent on operating conditions

Parameter	Description	Min	Max	Unit
Supply Voltage	VCC to GND	0	16.5	V
Peak Gate Current	Note 1	-20	20	A
Input Logic Levels	To GND	-0.5	15	V
Switching Frequency	Note 2		100	kHz
Working Voltage	Primary to Secondary, Secondary to Secondary		1200	V
Creepage Distance	Primary to Secondary Side	8		mm
dV/dt	Rate of change input to output	100		kV/µs
Operating Temperature	Ambient Operating Temperature	-40	+85	°C
Storage Temperature		-40	+90	°C

 © 2020 AgileSwitch, LLC

Electrical Characteristics

Conditions: V_{SUP} = +15.0 V, V_{IN_LOGIC} = 5V, MOSFET (Ciss = 32nF; Qg = 1500nC)

Power Supply	Description	Min	Typ	Max	Unit
Supply Voltage	VCC to GND	14	15	16	V
Supply Current	Without Load		110		mA
Supply Current	With Load, Note 3		250		mA

Signal I/O	Description	Min	Typ	Max	Unit
Input Impedance	5V - Hi and Lo side input		100		Ω
	15V – Hi & Lo side input		2000		Ω
	5V Differential – Hi & Lo side input		240		Ω
V_{IN} Low	5V - Turn-off threshold			1.25	V
	15V – Turn-off threshold			4	V
V_{IN} High	5V – Turn-on threshold	3.5			V
	15V – Turn-on threshold	10			V
V_{IN} (differential option)	Difference between VIN+ to VIN-	2			V
Fault Output Voltage	Fault lines are open collect with 5mA load	0.3		24	V
Fault Output Current	Note 4			10	mA
Switching Frequency	Note 2			100	kHz

Note 1: Input signal should not be activated until 20 ms after power is applied to allow on board DC-DC converter to stabilize.
Note 2: Actual maximum switching speed is a function of gate capacitance.
Note 3: SiC MOSFET dependant, conditions listed above assume a MOSFET with Ciss = 32nF & Qg = 1500nC operating at 10kHz
Note 4: Fault lines are open collector and require a pull-up resistor, 2KΩ recommended

 © 2020 AgileSwitch, LLC

Interconnects

Controller/Power to EDCA1 Connectors

Connector	Type	Ref	Manufacturer Part Number
Driver Board	20 Pin	J1	FCI 71918-220LF
Cable Assembly	20 Pin		FCI 71600-120LF

Recommended Cable for High Noise Environments: Flat Ribbon Cable, Twisted Pair, Shielded (3M 1785/20 Series)

2ASC-12A1HP Connection Sockets

Connector	Type	Ref	Manufacturer Part Number
Input	14 Pin	J5	NPPN141BFCN-RC or similar
Ch 1, Ch 2	8 Pin	J6, J7	NPPN081BFCN-RC or similar

Note: The 2ASC-12A1HP can be mounted to the adapter board using sockets or by soldering.

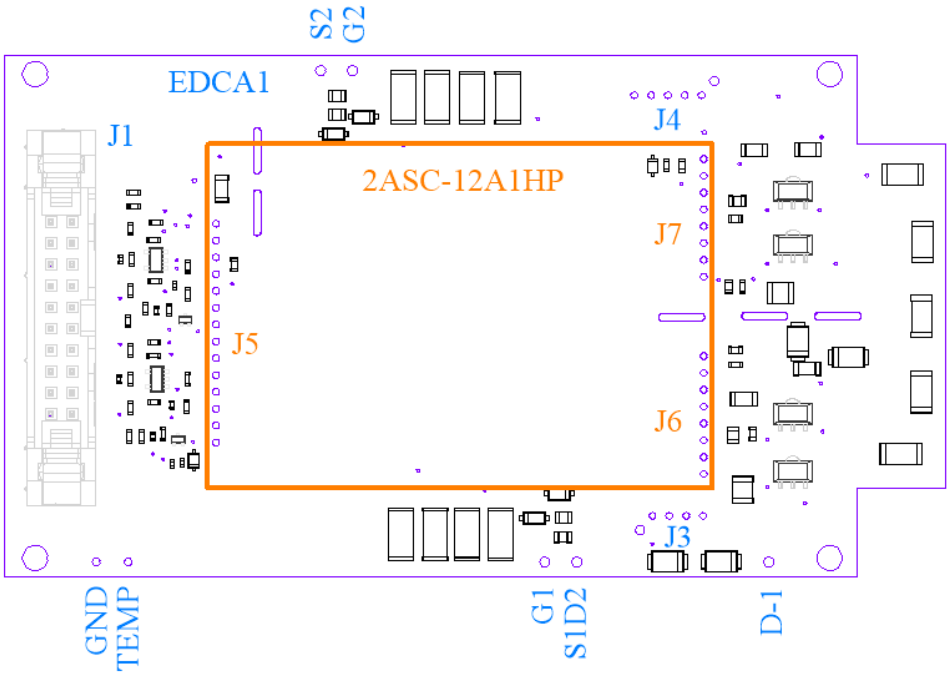

Figure 2 EDCA1 Interconnects on Adapter Board

 © 2020 AgileSwitch, LLC

Mounting of Core Assembly on Adapter Board

Method 1 - Soldering

2ASC-12A1HP can be directly soldered onto an Adapter Board without the need for additional support.

Method 2 – Socket

2ASC-12A1HP can be plugged into female sockets on an Adapter Board.

Recommended Sockets

Ref	Connector	Type	Manufacturer Part Number
J5	Input	14 Pin, 2mm pitch spacing	NPPN141BFCN-RC
J6, J7	Ch 1, Ch 2	8 Pin, 2mm pitch spacing	NPPN081BFCN-RC

 © 2020 AgileSwitch, LLC

Recommended Interface Circuitry

Primary

Block Diagram

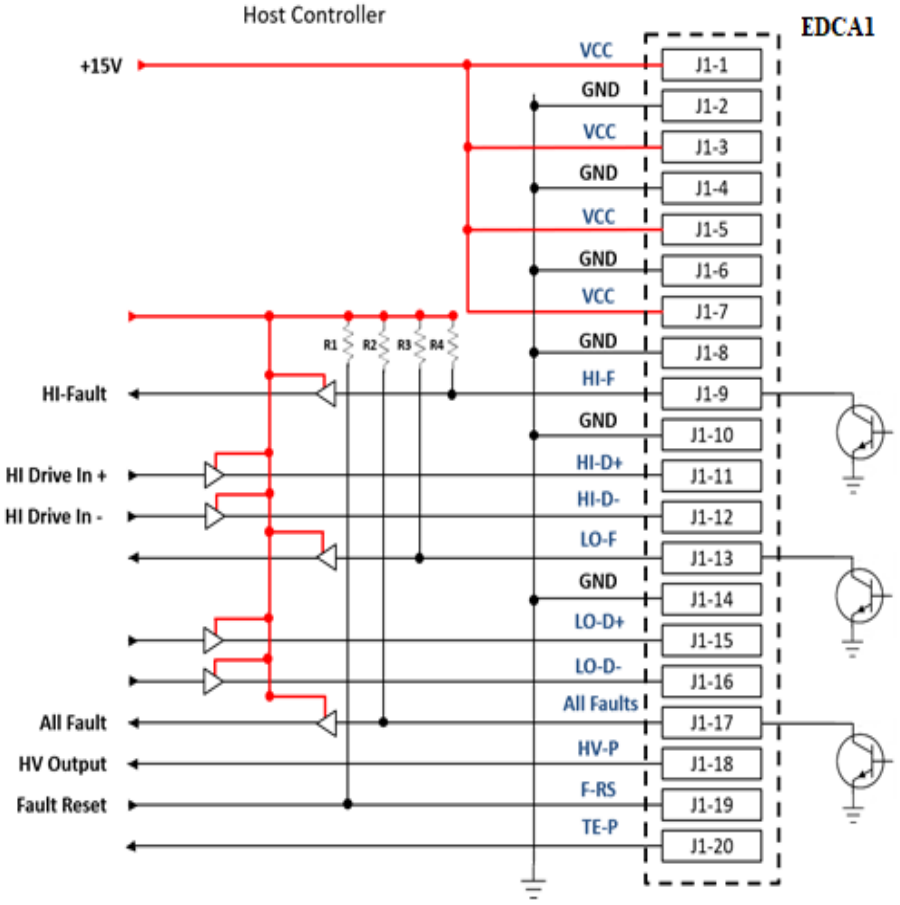

Figure 3 EDCA1 Recommended Interface Circuitry

 © 2020 AgileSwitch, LLC

Temperature and High Voltage PWM Monitoring

The AgileSwitch 2ASC-12A1HP Driver provides two 31.5 kHz, 5.0V PWM output signals that monitor the thermistor temperature (isolated or non-isolated) and the DC Link Voltage (High Side drain to Low Side source) of the SiC MOSFET power module. The PWM signals have an output impedance of 510Ω. When combined with an external low pass filter, these signals represent a real time voltage for both High Voltage and Thermistor Temperature. A Sallen-Key active low pass filter can be used with these outputs as shown below with a 2 kHz cut-off frequency. The cut-off frequency can be optimized for your application. For simplicity, a simple RC low pass filter with 100 Hz cut-off frequency can also be used.

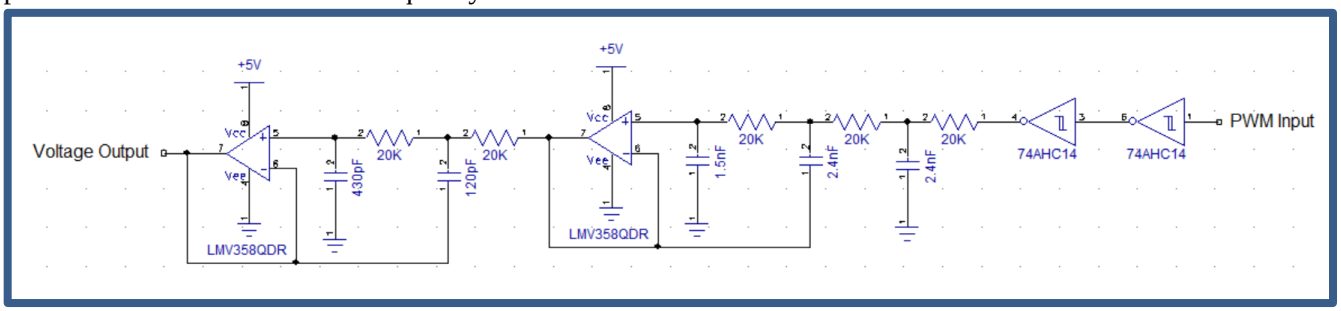

Figure 4 Example of a Low Pass Filter for DC Link PWM output

 © 2020 AgileSwitch, LLC

Schematic

Control I/O – Sheet 1 of 2

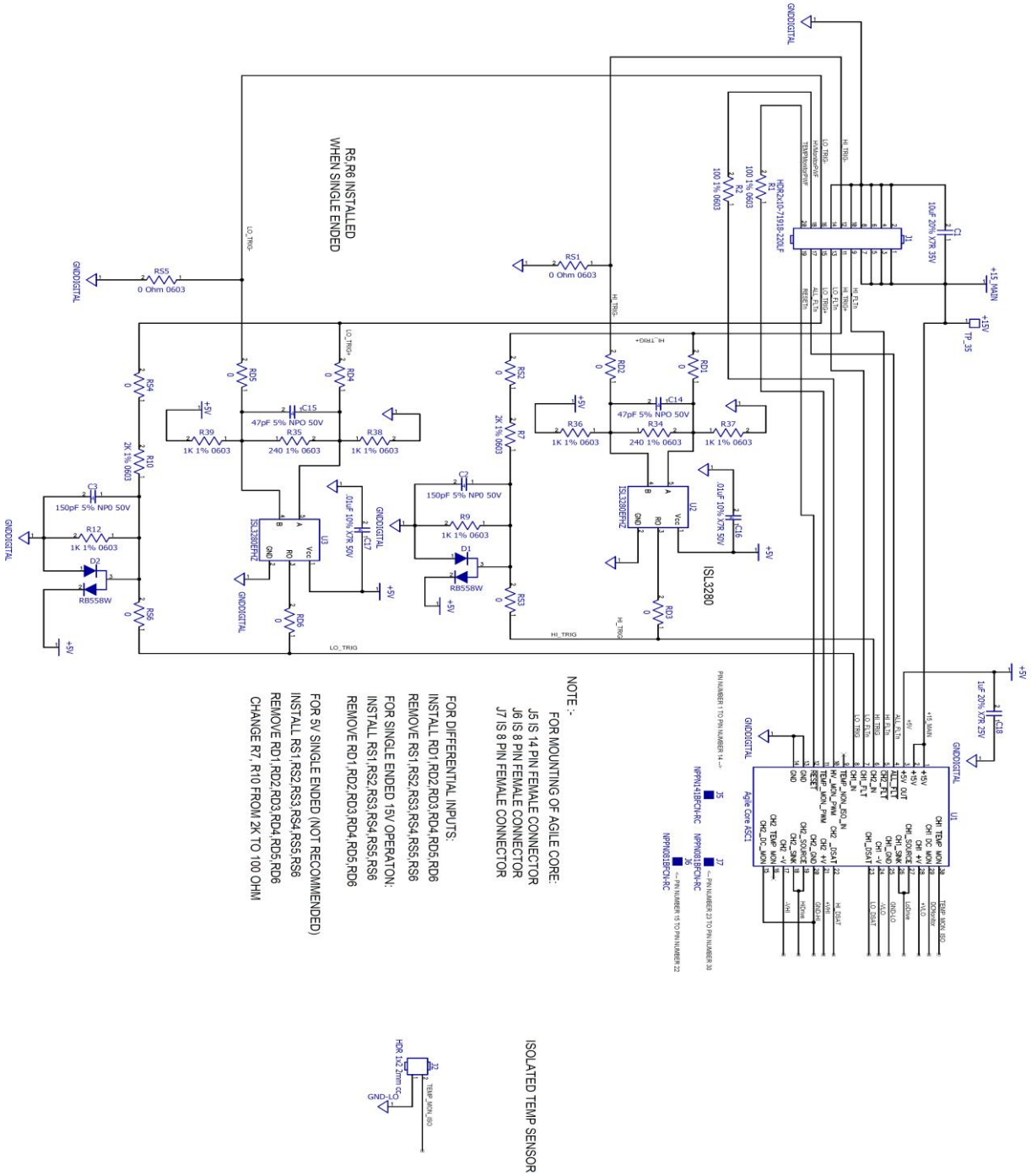

 © 2020 AgileSwitch, LLC

HI & LO Side Drivers – Sheet 2 of 2

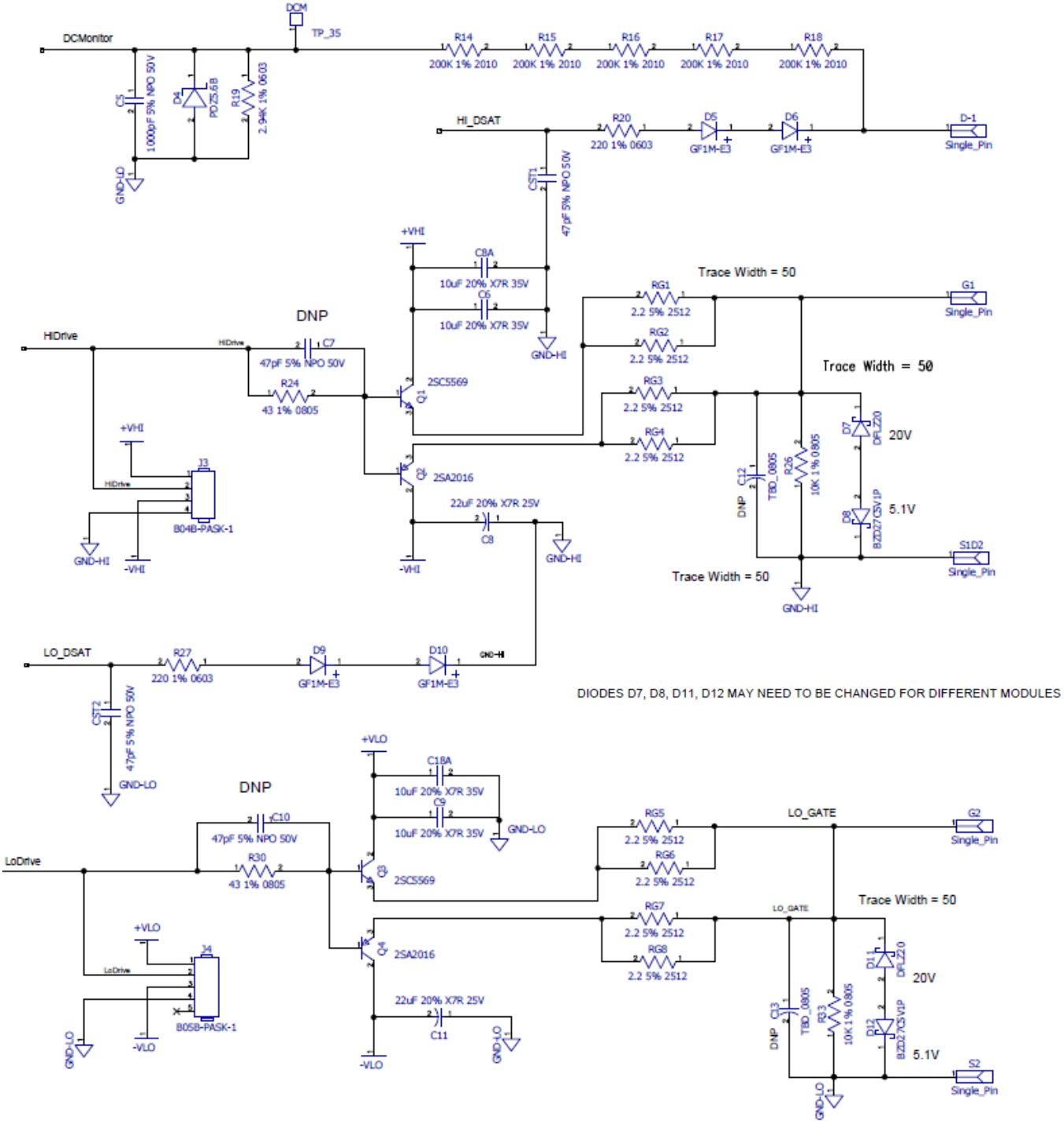

 © 2020 AgileSwitch, LLC

Bill of Materials

Item Number	RefDes	Qty	Part	Description	Manufacturer	Manufacturer P/N
1	AS-17600, EDCA1 Rev 2.0	2	PCB	PCB Bare Printed Circuit Board	Kingford	AS-17600
2	C1, C6, C9, C18A, C8A	5	10uF	10uF 20% X7R 35V	TDK	C3216X7R1V106M160AC
3	C14, C15	2	47pF	47pF 5% NPO 50V	Murata	GCM1555C1H470JA16D
4	C16, C17	2	0.01uF	.01uF 10% X7R 50V	Murata	GRM155R71H103KA88D
5	C18	1	1uF	1uF 20% X7R 25V	Murata	GCM188R71E105MA64D
6	C2, C3	2	150pF	150pF 5% NP0 50V	Murata	GCM1555C1H151JA16D
7	C5	1	1000pF	1000pF 5% NPO 50V	Murata	GRM1885C1H102JA01J
8	C7, C10, CST1, CST2	4	47pF	47pF 5% NPO 50V	Murata	GCM1885C1H470JA16D
9	C8, C11	2	22uF	22uF 20% X7R 25V	Murata	GRM32ER71E226ME15L
10	D1, D2	2	DIODE	DIODE ARRAY SCHOTTKY 30V EMD3	Rohm	RB558WTL
11	D4	1	DIODE	DIODE ZENER 5.6V 400MW SOD323	Nexperia USA Inc.	PDZ5.6B,115
12	D5, D6, D9, D10	4	DIODE	DIODE GEN PURP 1KV 1A DO214BA	Vishay	GF1M-E3
13	D7, D11	2	DIODE	TVS DIODE 20V 32.4V POWERDI 123	Diodes Inc	DFLT20A-7
14	D8, D12	2	DIODE	DIODE ZENER 5.1V 800MW DO219AB	Vishay	BZD27C5V1P-E3-08
15	J1	1	CONN	CONN HEADER VERT 20POS 2.54MM	FCI	71918-220LF
16	J5	1	CONN	CONN HDR 14POS 0.079 GOLD PCB	Sullins Connector Solutions	NPPN141BFCN-RC
17	J6,J7	2	CONN	CONN HDR 8POS 0.079 GOLD PCB	Sullins Connector Solutions	NPPN081BFCN-RC
18	Q1, Q3	2	TRANS	TRANS NPN 50V 7A SOT89-3	On Semi	2SC5569-TD-E
19	Q2, Q4	2	TRANS	TRANS PNP 50V 7A SOT89-3	On Semi	2SA2016-TD-E
20	R1, R2	2	100	100 1% 0603	Vishay	CRCW0603100RFKEA
21	R14, R15, R16, R17, R18	5	200K	200K 1% 2010	Vishay	CRCW2010200KFKEF
22	R19	1	2.94K	2.94K 1% 0603	Vishay	CRCW06032K94FKEA
23	R20, R27	2	220	220 1% 0603	Vishay	CRCW0603220RFKEA
24	R24, R30	2	43	43 1% 0805	Vishay	CRCW080543R0FKEA
25	R26, R33	2	10K	10K 1% 0805	Vishay	CRCW080510K0FKEA
26	R34, R35	2	240	240 1% 0603	Vishay	CRCW0603240RFKEA
27	R7, R10	2	2K	2K 1% 0603	Vishay	CRCW06032K00FKEA
28	R9, R12, R36, R37, R38, R39	6	1K	1K 1% 0603	Vishay	CRCW06031K00FKEA
29	RG1, RG2, RG3, RG4, RG5, RG6, RG7, RG8	8	2.2	2.2 5% 2512	Vishay	CRCW25122R20JNEGHP
30	RS1, RS2, RS3, RS4, RS5, RS6	6	0	0 Ohm 0603	Vishay	CRCW06030000Z0EA
31	U2, U3	2	IC	IC RECEIVER 0/1 RS422/485 SC74A	Intersil	ISL3280EFHZ-T

 © 2020 AgileSwitch, LLC

Layout

Layer 1 - Top

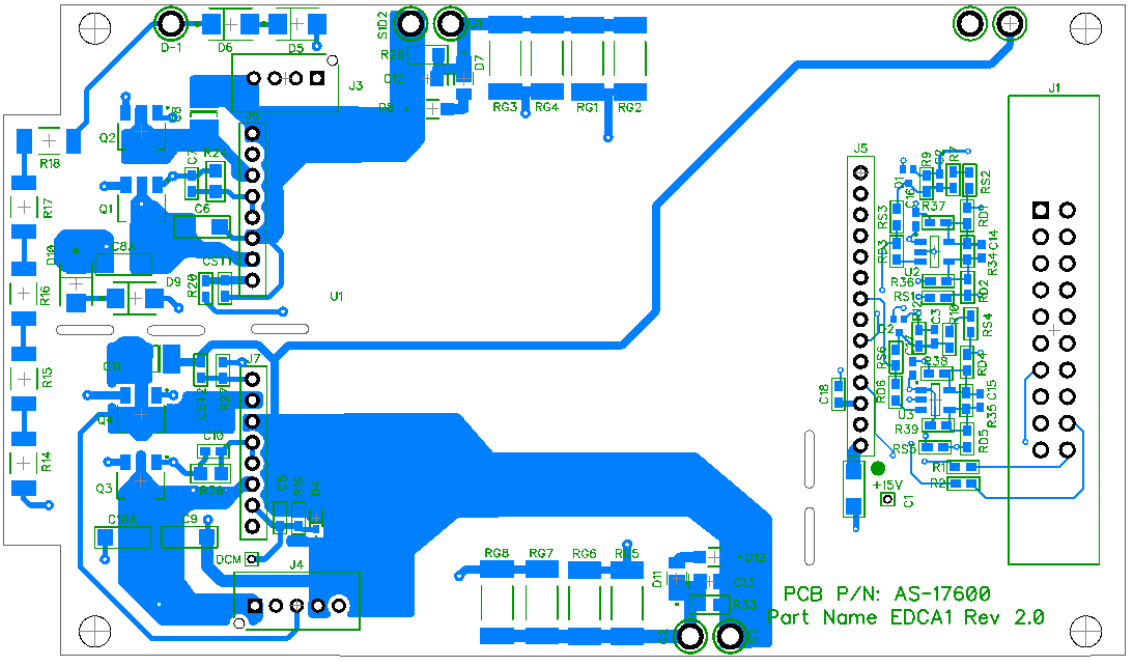

Layer 2 – Voltage

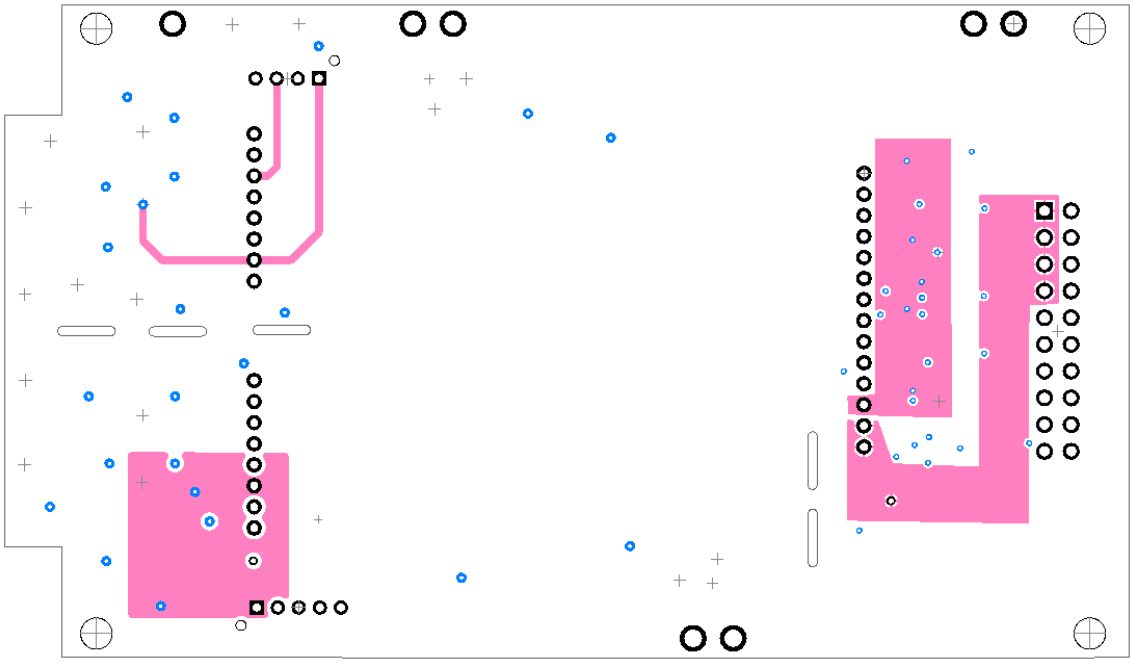

 © 2020 AgileSwitch, LLC

Layer 3 – Signals

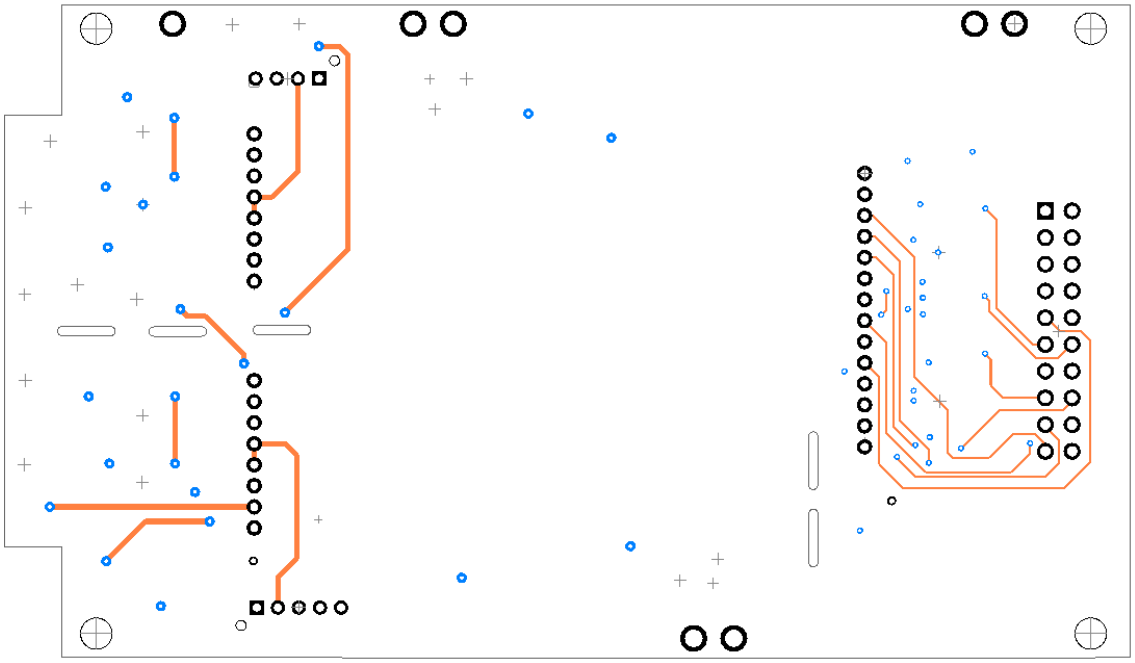

Layer 4 – Bottom_GND

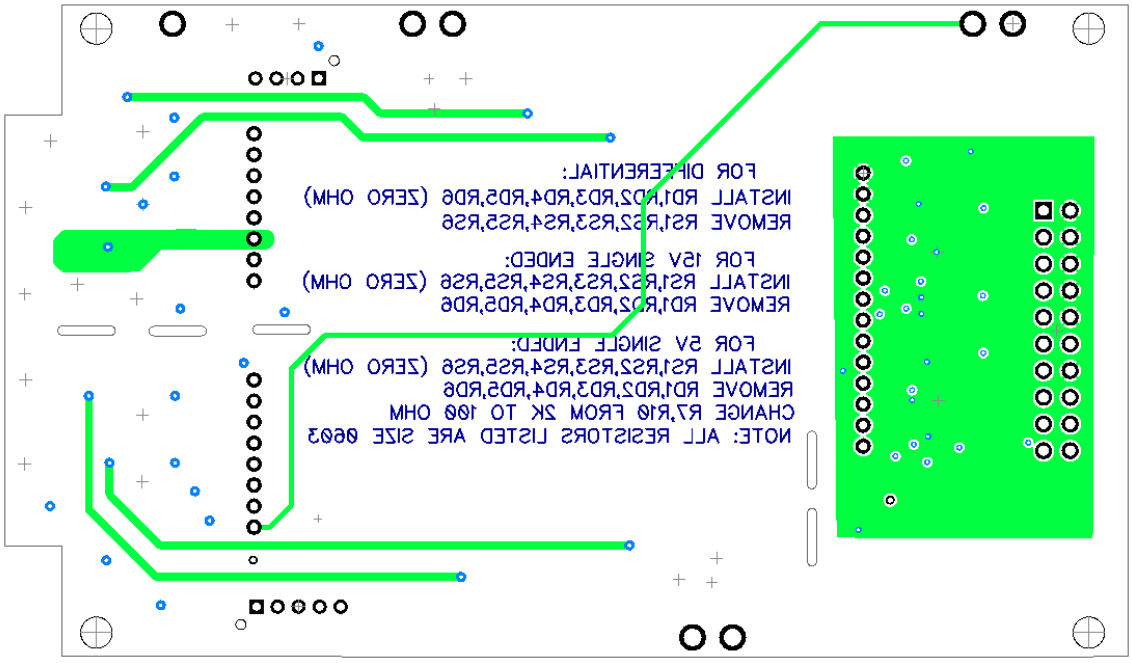

 © 2020 AgileSwitch, LLC

Design Files

The Schematic, Layout and Bill of Materials for the EDCA1 are publicly available for download.

Please visit AgileSwitch.com for access to these files.
http://www.agileswitch.com/module-adapter-boards

Important Precautions

Caution: Handling devices with high voltages involves risk to life. It is imperative to comply with all respective precautions and safety regulations.

When installing the core and adapter board, please make sure that power is turned off. Hot swapping may cause damage to the IC components on the board.

AgileSwitch assumes that the core and adapter board have been mounted on the SiC MOSFET prior to start-up testing. It is recommended that the user checks that the SiC MOSFET power modules are operating inside the Specified Operating Area (SOA) as specified by the module manufacturer including short circuit testing under very low load conditions.

 © 2020 AgileSwitch, LLC

Mechanical Dimensions

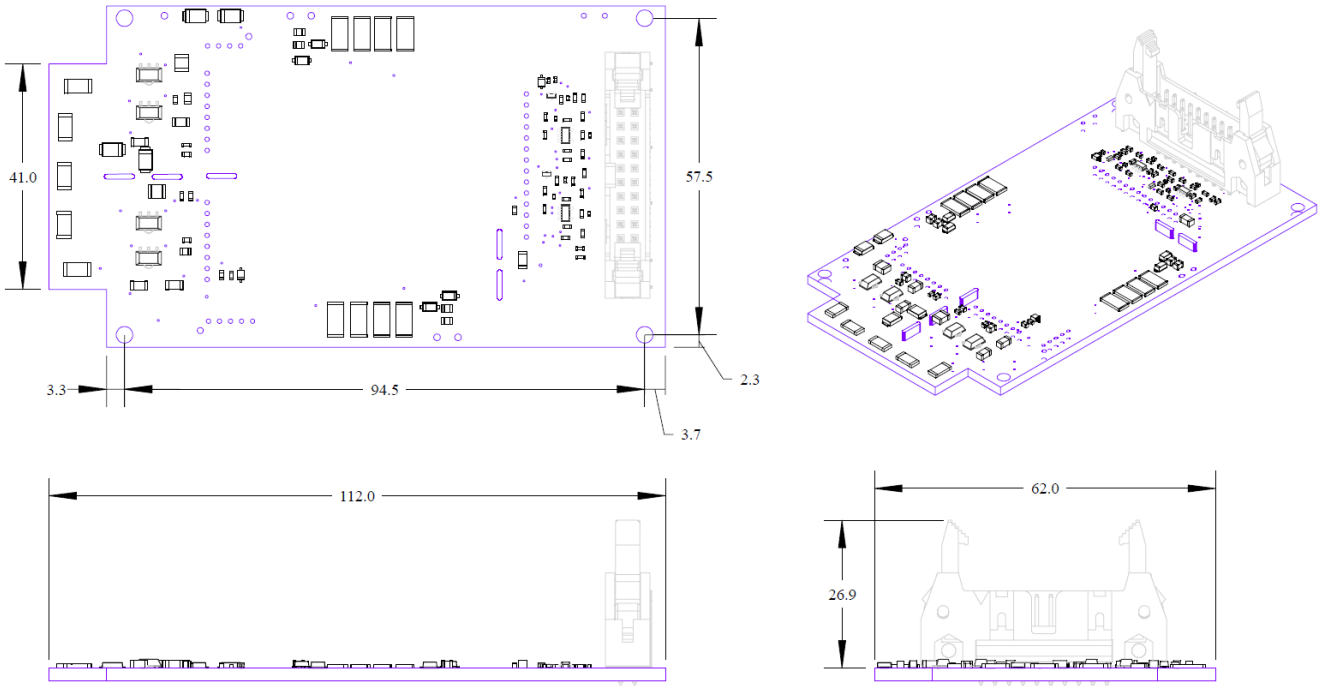

Dimensions are in mm.

Revisions

Prepared By	Approved By	Version	Date	Description
V. Gaoankar J. Somannavar	N. Satheesh A. Fender	01	05/05/2020	Initial Release

 © 2020 AgileSwitch, LLC

Legal Disclaimer

Information in this document is provided solely in connection with AGILESWITCH products. AGILESWITCH, LLC and its subsidiaries ("AGILESWITCH") reserve the right to make changes, corrections, modifications or improvements, to this document, and the products and services described herein at any time, without notice.

All AGILESWITCH products are sold pursuant to AGILESWITCH's terms and conditions of sale.

Purchasers are solely responsible for the choice, selection and use of AGILESWITCH products and services described herein, and AGILESWITCH assumes no liability whatsoever relating to the choice, selection or use of the AGILESWITCH products and services described herein.

No license, express or implied, by estoppel or otherwise, to any intellectual property rights is granted under this document. If any part of this document refers to any third party products or services it shall not be deemed a license grant by AGILESWITCH for the use of such third party products or services, or any intellectual property contained therein or considered as a warranty covering the use in any manner whatsoever of such third party products or services or any intellectual property contained therein.

UNLESS OTHERWISE SET FORTH IN AGILESWITCH'S TERMS AND CONDITIONS OF SALE AGILESWITCH DISCLAIMS ANY EXPRESS OR IMPLIED WARRANTY WITH RESPECT TO THE USE AND/OR SALE OF AGILESWITCH PRODUCTS INCLUDING WITHOUT LIMITATION IMPLIED WARRANTIES OF MERCHANTABILITY, FITNESS FOR A PARTICULAR PURPOSE (AND THEIR EQUIVALENTS UNDER THE LAWS OF ANY JURISDICTION), OR INFRINGEMENT OF ANY PATENT, COPYRIGHT OR OTHER INTELLECTUAL PROPERTY RIGHT.

UNLESS EXPRESSLY APPROVED IN WRITING BY AN AUTHORIZED AGILESWITCH REPRESENTATIVE, AGILESWITCH PRODUCTS ARE NOT RECOMMENDED, AUTHORIZED OR WARRANTED FOR USE IN MILITARY, AIR CRAFT, SPACE, LIFE SAVING, OR LIFE SUSTAINING APPLICATIONS, NOR IN PRODUCTS OR SYSTEMS WHERE FAILURE OR MALFUNCTION MAY RESULT IN PERSONAL INJURY, DEATH, OR SEVERE PROPERTY OR ENVIRONMENTAL DAMAGE.

AGILESWITCH PRODUCTS WHICH ARE NOT SPECIFIED AS "AUTOMOTIVE GRADE" MAY ONLY BE USED IN AUTOMOTIVE APPLICATIONS AT USER'S OWN RISK.

Resale of AGILESWITCH products with provisions different from the statements and/or technical features set forth in this document shall immediately void any warranty granted by AGILESWITCH for the AGILESWITCH product or service described herein and shall not create or extend in any manner whatsoever, any liability of AGILESWITCH.

AGILESWITCH, the AGILESWITCH logo, AgileStack, AgileStack Communications and Stack Black Box are trademarks or registered trademarks of AGILESWITCH, LLC in various countries. Any other names are the property of their respective owners.

EconoDual and PrimePACK are trademarks of Infineon Technologies AG.

Information in this document supersedes and replaces all information previously supplied.
Specifications are subject to change without notice.

© 2010-2020 AGILESWITCH LLC - All rights reserved www.AgileSwitch.com.

Patent Notices

Offering	Issued U.S. Patent Numbers
AgileStack™ Power Stack	8,984,197
Gate Drivers for WBG Power Semiconductors	9,490,798
Additional Patents Pending	

Manufacturer

AgileSwitch, LLC
2025 Washington Ave
Philadelphia, PA 19146
United States

Tel: +1-484-483-3256 (US)
+44 (0)1273 252994 (Europe)
Email: info@AgileSwitch.com
Web: www.AgileSwitch.com

Mouser Electronics

Authorized Distributor

Click to View Pricing, Inventory, Delivery & Lifecycle Information:

Microchip:

EDCA1