PL130-05

High Speed Translator Buffer to PECL (Enable Low)

FEATURES

- Differential PECL output
- Single AC coupled input (min. 100mV swing).
- Input range from DC to 1.0 GHz.
- 2.5V to 3.3V operation.
- Available in 3x3mm QFN.

PIN CONFIGURATION

(TOP VIEW)

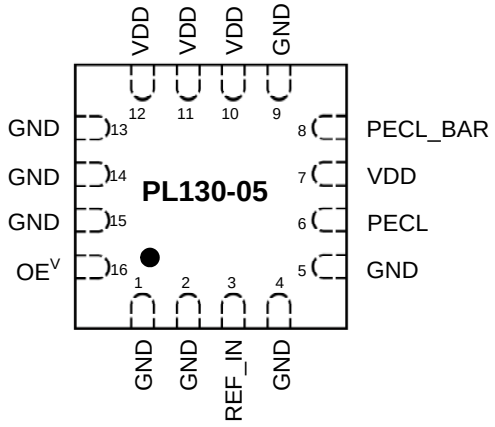

Note: ^V denotes internal pull down

DESCRIPTION

The PL130-05 is a low cost, high performance, high speed, buffer that reproduces any input frequency from DC to 1.3GHz. It provides one pair of differential PECL outputs. Any input signal with at least 100mV swing can be used as reference signal. This chip is ideal for conversion from sine wave, TTL, CMOS, or LVDS to PECL.

BLOCK DIAGRAM

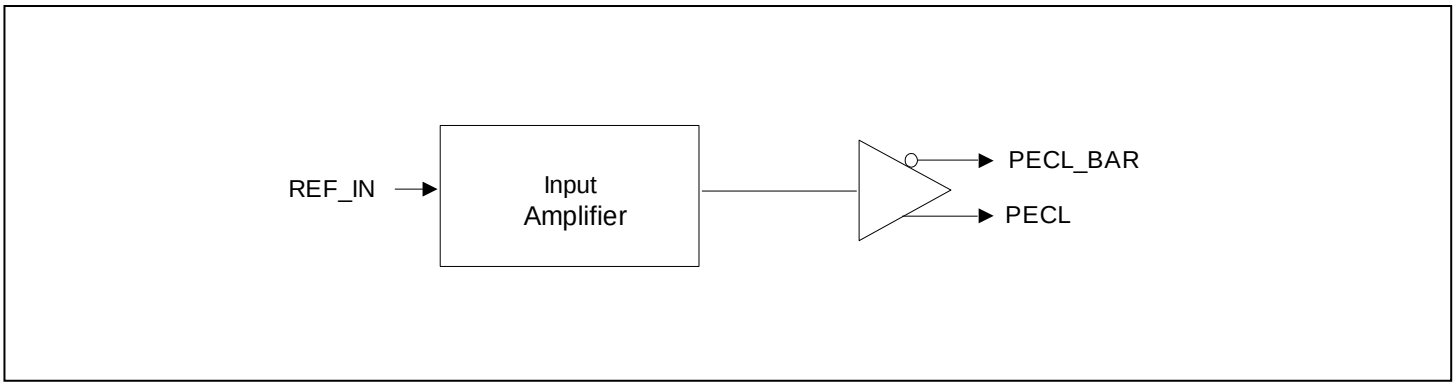

PIN DESCRIPTIONS

Name	3x3mm QFN Pin number	Type	Description
GND	1,2,4,5, 9,13,14,15	P	Ground.
VDD	7,10,11,12	P	Power supply.
REF_IN	3	I	Reference input signal. The frequency of this signal will be reproduced at the output (after translation to PECL level).
PECL	6	O	PECL True output.
PECL_BAR	8	O	PECL Complementary output.
OE	16	I	Output enable ('0' for enable). Internal pull-down (default is '0').

ELECTRICAL SPECIFICATIONS

1. Absolute Maximum Ratings

PARAMETERS	SYMBOL	MIN.	MAX.	UNITS
Supply Voltage	V_{DD}		4.6	V
Input Voltage, dc	V_I	-0.5	V_{DD}+0.5	V
Output Voltage, dc	V_O	-0.5	V_{DD}+0.5	V
Storage Temperature	T_S	-65	150	°C
Ambient Operating Temperature*	T_A	-40	85	°C
Junction Temperature	T_J		125	°C
Lead Temperature (soldering, 10s)			260	°C
ESD Protection, Human Body Model			2	kV

Exposure of the device under conditions beyond the limits specified by Maximum Ratings for extended periods may cause permanent damage to the device and affect product reliability. These conditions represent a stress rating only, and functional operations of the device at these or any other conditions above the operational limits noted in this specification is not implied.

* **Note**: Operating Temperature is guaranteed by design for all parts (COMMERCIAL and INDUSTRIAL), but tested for COMMERCIAL grade only.

2. AC Specification

PARAMETERS	CONDITIONS	MIN.	TYP.	MAX.	UNITS
Input Frequency		0		1000	MHz
Input signal swing	REF_IN input	100			mV
Output Frequency		0		1000	MHz
Output Rise Time	0.8V to 2.0V with no load			1.5	ns
Output Fall Time	2.0V to 0.8V with no load			1.5	ns

3. PECL Electrical Characteristics

PARAMETERS	SYMBOL	CONDITIONS	MIN.	MAX.	UNITS
Output High Voltage	V_{OH}	R_L = 50 Ω to (V_{DD} – 2V) (see figure)	V_{DD} – 1.025		V
Output Low Voltage	V_{OL}			V_{DD} – 1.620	V

4. PECL Switching Characteristics

PARAMETERS	SYMBOL	CONDITIONS	MIN.	TYP.	MAX.	UNITS
Clock Rise Time	t_r	@20/80% - PECL		0.6	1.5	ns
Clock Fall Time	t_f	@80/20% - PECL		0.5	1.5	ns

PECL Levels Test Circuit

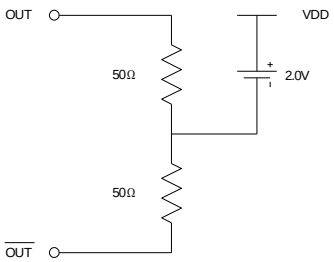

PECL Output Skew

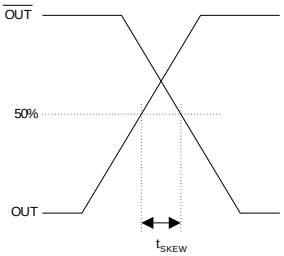

PECL Transistion Time Waveform

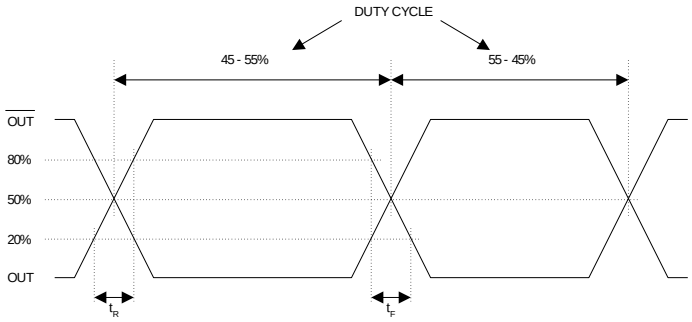

PACKAGE INFORMATION

VARIATIONS:

SYMBOL	16 LD		
	MIN	NOM	MAX
e	0.50 BSC		
b	0.18	0.23	0.30
L	0.30	0.40	0.50
ND	4		
NE	4		

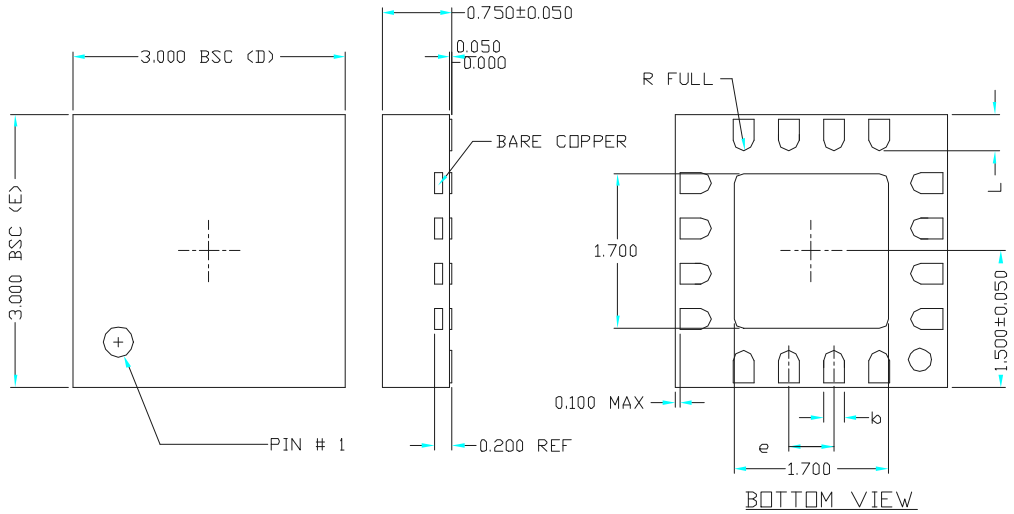

ORDERING INFORMATION

For part ordering, please contact our Sales Department:
2180 Fortune Drive, San Jose, CA 95131, USA
Tel: (408) 944-0800 Fax: (408) 474-1000

PART NUMBER
The order number for this device is a combination of the following:
Device number, Package type and Operating temperature range

PL130-05 S C

PART NUMBER

TEMPERATURE
C=COMMERCIAL
I=INDUSTRAL

PACKAGE TYPE
Q=QFN

Order Number	Marking	Package Option
PL130-05QC-R	P130-05QC	QFN - Tape and Reel
PL130-05QC	P130-05QC	QFN - Tube

Micrel Inc., reserves the right to make changes in its products or specifications, or both at any time without notice. The information furnished by Micrel is believed to be accurate and reliable. However, Micrel makes no guarantee or warranty concerning the accuracy of said information and shall not be responsible for any loss or damage of whatever nature resulting from the use of, or reliance upon this product.
***LIFE SUPPORT POLICY**: Micrel's products are not authorized for use as critical components in life support devices or systems without the express written approval of the President of Micrel Inc.*