1. Measurement condition :

Ambient temperature T_A:	23 °C	
Input power level:	0 dBm	
Terminating impedances in f_C *) :	for input:	960 Ω ‖ -8,3. pF.
	for output:	1,17 KΩ ‖ -7,5. pF.

2. Characteristics :

Remark: Reference level for the relative attenuation $\mathbf{a_{rel}}$ of the **TFS 171A** is the minimum of the pass band attenuation $\mathbf{a_{min}}$. The minimum of the pass band attenuation $\mathbf{a_{min}}$ is defined as the insertion loss $\mathbf{a_e}$. The nominal frequency $\mathbf{f_N}$ is fixed to **171,20 MHz**. The centre frequency $\mathbf{f_C}$ is the arithmetic mean value of the upper and lower frequencies at the **20 dB** filter attenuation level relative to the insertion loss $\mathbf{a_e}$. All specified parameters have to be reached in the operating temperature range.

Data	**typ. value**		**tolerance / limit**	
Insertion loss at ambient temperature :	5,5	dB	9,5	dB
Nominal frequency $\mathbf{f_N}$	-		171,2	MHz
Centre frequency at ambient temperature fc	171,22	MHz	171,2 ± 0,1	MHz
Bandwidth				
1 dB - band width	870	kHz	min. 400	kHz
3 dB - band width	1350	kHz	min. 900	kHz
20 dB - band width	2680	KHz	max. 3300	kHz
Relative attenuation $\mathbf{a_{rel}}$				
f_N .... f_N ± 0,2 MHz	-		max. 1	dB
f_N ± 0,2 MHz .... f_N ± 0,45 MHz	-		max. 3	dB
f_N ± 1,65 MHz .... f_N ± 5 MHz	33	dB	min. 20	dB
f_N ± 5 MHz .... f_N ± 40 MHz	46	dB	min. 35	dB
f_N ± 40 MHz .... f_N ± 100 MHz	55	dB	min. 45	dB
Group delay (mean value) f_N ± 200 kHz	740	ns	max. 1	µs
Group delay ripple in f_N ± 200 kHz (p-p)	50	ns	max. 400	ns
Phase ripple in f_N ± 200 kHz (p-p)	4 °			
Input power level	-		max. 10	dBm
Frequency inversion temperature (T_o) :	20..25 °C			
Temperature coefficient of frequency (Tc_f) :	- 0,036	ppm/K²		
Frequency deviation of f_C over temperature: **)	$\Delta f_C(Hz) = Tc_f(ppm/K) \times (T - T_o)^2 \times f_O\ (MHz)$			
Operating temperature range (OTR) :			- 40 °C ... + 85 °C	

*) The terminating impedances depend on parasitics and q-values of matching elements and the board used, and are to be understood as reference values only. Should there be additional questions do not hesitate to ask for an application note or contact our design team.

Generated: _____

Checked/Approved: _____

Microchip Frequency Technology GmbH
Potsdamer Straße 18
D 14 513 TELTOW / Germany
Tel: (+49) 3328 4784-0 / Fax: (+49) 3328 4784-30

Microchip Frequency Technology GmbH reserves the right to make changes to the product(s) and/or information contained herein without notice. No liability is assumed as a result of their use or application. No rights under any patent accompany the sale of any such product(s) or information.

3. Construction and pin connection : (All dimensions in mm)

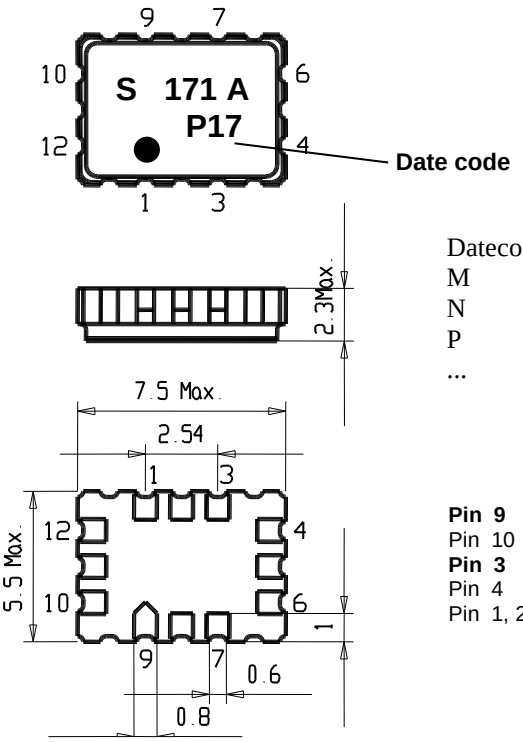

Datecode:	Year+week
M	2000
N	2001
P	2002
...	

Pin 9 **Input**.
Pin 10 Input RF Return.
Pin 3 **Output.**
Pin 4 Output RF Return.
Pin 1, 2, 5 - 8, 11, 12 - Package Ground.

4. 50 Ω matching network

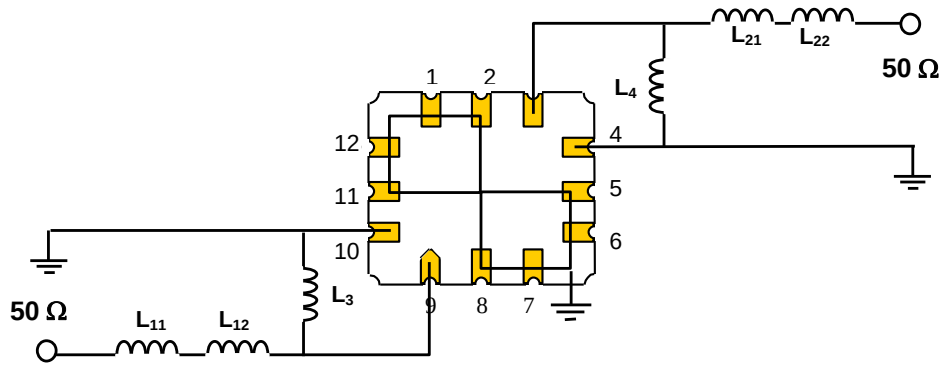

Microchip Frequency Technology GmbH
Potsdamer Straße 18
D 14 513 TELTOW / Germany
Tel: (+49) 3328 4784-0 / Fax: (+49) 3328 4784-30

Microchip Frequency Technology GmbH reserves the right to make changes to the product(s) and/or information contained herein without notice. No liability is assumed as a result of their use or application. No rights under any patent accompany the sale of any such product(s) or information.

5. Stability characteristics :

After the following tests the filter shall meet the whole specification:

1. Shock:	500g, 18 ms, half sine wave, 3 shocks each plane; DIN IEC 68 T2 - 27
2. Vibration:	10 Hz to 500 Hz, 0,35 mm or 5g respectively, 1 octave per min, 10 cycles per plan, 3 plans; DIN IEC 68 T2 - 6
3. Change of temperature	-55 °C to 125°C / 30 min. each / 10 cycles DIN IEC 68 part 2 – 14 Test N
4. Resistance to older heat (reflow):	reflow possible: twice max.;for temperature conditions, please refer to the attached "Air reflow temperature conditions" on page 4

6. Packing :

Tape & Reel: DIN IEC 286 - 3, with exception of value for N and minimum bending radius;
tape type II, embossed carrier tape with top cover tape on the upper side;

max. pieces of filters per reel:	3000
reel of empty components at start:	min 300 mm
reel of empty components at start including leader:	min 500 mm
Trailer	min 300 mm

Tape (all dimensions in mm)

W	:	16± 0,3	
Po	:	4	± 0,1
Do	:	1,5	+ 0,1
E	:	1,75	± 0,1
F	:	7,5	± 0,1
G (min)	:	0,6	
P2	:	2	± 0,1
P1	:	8	± 0,1
D1(min)	:	1,5	
Ao	:	5,5	± 0,2
Bo	:	7,5	± 0,2
Ct	:	13,5	± 0,1

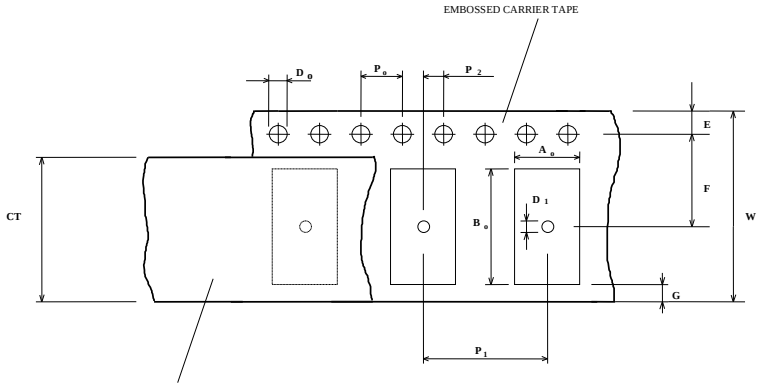

Reel (all dimensions in mm):

A	:	330
W1	:	16,4 + 2
W2(max)	:	22,4
N(min)	:	50
C	:	13,00 +0,50 / -0,20

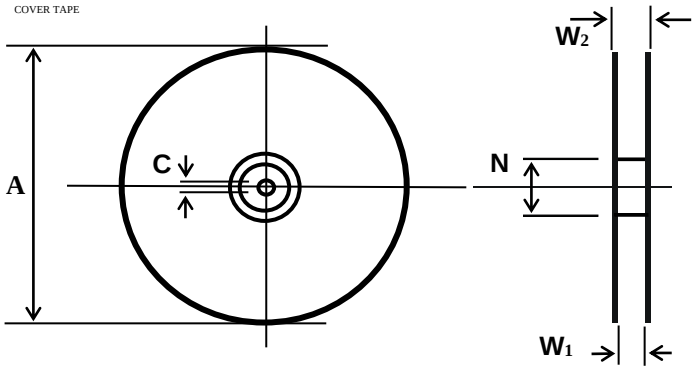

The minimum bending radius is 45 mm. The mounting surface of the filters faces the bottom side of the embossed carrier tape. Markings on the filters can be read if the upper side of the carrier tape is regarded with the sprocket holes on its right.

Microchip Frequency Technology GmbH
Potsdamer Straße 18
D 14 513 TELTOW / Germany
Tel: (+49) 3328 4784-0 / Fax: (+49) 3328 4784-30

Microchip Frequency Technology GmbH reserves the right to make changes to the product(s) and/or information contained herein without notice. No liability is assumed as a result of their use or application. No rights under any patent accompany the sale of any such product(s) or information.

7. Air reflow temperature conditions :

1st and 2nd air reflow profile

Name:	pre-heating periods	main-heating periods	peak temperature
Temperature:	150 °C - 170 °C	over 200 °C	255 °C ± 5 °C
Time:	60 sec. - 90 sec.	20 sec. - 25 sec.	

Chip-mount air reflow profile

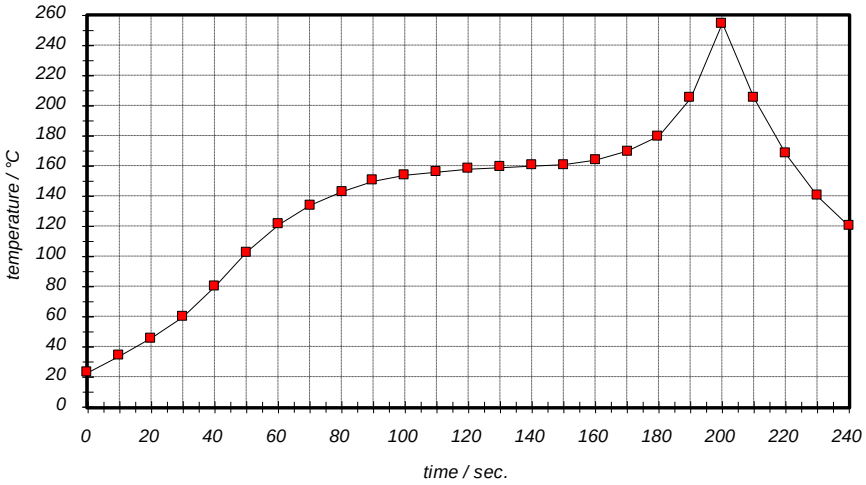

Table for temperature vs. time during the air reflow process

Tolerance of temperatures: ± 5 °C

time / sec.	temperature / °C	time / sec.	temperature / °C
0	23	140	160
10	34	150	161
20	46	160	164
30	60	170	170
40	80	180	180
50	103	190	205
60	121	195	230
70	134	200	255
80	143	205	230
90	150	210	205
100	154	215	180
110	156	220	165
120	158	230	140
130	159	240	120

Microchip Frequency Technology GmbH
Potsdamer Straße 18
D 14 513 TELTOW / Germany
Tel: (+49) 3328 4784-0 / Fax: (+49) 3328 4784-30

Microchip Frequency Technology GmbH reserves the right to make changes to the product(s) and/or information contained herein without notice. No liability is assumed as a result of their use or application. No rights under any patent accompany the sale of any such product(s) or information.

8. History :

Version	Reason of Changes	Name	Date
1.0	Generation of preliminary specification according to customer requirements.	Dunzow W.	18.09.2001
1.1	Change package according to customer requirements.	Dunzow W.	30.10.2001
1.2	Change pin connection according to customer requirements.	Dunzow W.	08.11.2001
1.3	Correct error in unbalanced scheme 1. Remove balanced scheme 2.	Dunzow W.	11.12.2001
1.4	Add of typical values and change to filter specification	Dr. Sabah	26.04.2002

Microchip Frequency Technology GmbH
Potsdamer Straße 18
D 14 513 TELTOW / Germany
Tel: (+49) 3328 4784-0 / Fax: (+49) 3328 4784-30

Microchip Frequency Technology GmbH reserves the right to make changes to the product(s) and/or information contained herein without notice. No liability is assumed as a result of their use or application. No rights under any patent accompany the sale of any such product(s) or information.