Radiation-Hardened Isolated DC-to-DC Converter

SA50-28 Triple Series

Introduction

The SA50-28 is an isolated DC-to-DC converter capable of delivering up to 50W of output power in a small size design. The SA family provides a radiation hardened option with top class TID and SEE performance for space and military applications. With forward converter topology and a patented magnetic feedback, the SA50-28 is optimized for applications where isolated DC voltage conversion is required. The discrete surface mount design facilitates customization with reasonable lead time and modest NRE cost.

To achieve MIL-STD-461 EMI compliance, an external filter is required. Off-the-shelf filters, such as Microchip's SF200-28-28S, are available.

As the only non-hybrid space-grade DC-DC power converter module in the market, the SA50-28 series excels in its robustness in applications with 8.22×10^6 hours of MTBF.

The SA50-28 is available in a 3.055" x 2.055" x 0.5" package.

© 2022-2023 Microchip Technology Inc. and its subsidiaries

Table of Contents

Introduction....1

1. Benefits and Features....3
2. Radiation Performance....4
3. Typical Applications Circuits....5
4. Absolute Maximum Ratings....6
5. Electrical Parameters....7
6. Radiation Specification (Note 1)....13
7. Sample Electrical Waveforms (For Reference Only)....14
8. Pin Configuration....16
9. Pin Description....17
10. Radiation Performance (-H) Hardened....18
11. Radiation Performance (-P) Prototype....19
12. Mechanical Outline (Axial Pins) Package....20
13. Mechanical Outline (Radial Pins) Package....21
14. Qualification Test (Reference Report QTR996)....22
15. ATP Screening Test (-H) Hardened....23
16. ATP Screening Test (-P) Prototypes....24
17. Ordering Information....25
18. Revision History....26

Microchip Information....27

- The Microchip Website....27
- Product Change Notification Service....27
- Customer Support....27
- Microchip Devices Code Protection Feature....27
- Legal Notice....27
- Trademarks....28
- Quality Management System....29
- Worldwide Sales and Service....30

© 2022-2023 Microchip Technology Inc. and its subsidiaries

1. Benefits and Features

- Up to 50W Output Power
- 20 VDC to 40 VDC Input Range
- Four Output Configurations Available

Main	Aux A/B	Base Part Number
3.3V	12V	SA50-28-3R3-12T
3.3V	15V	SA50-28-3R3-15T
5V	12V	SA50-28-5-12T
5V	15V	SA50-28-5-15T

- Dual Isolated 12V or 15V Auxiliary Outputs
- Up to 85% Efficiency @ Full Load
- <1% Output Ripple
- Forward Topology
- Patented Magnetic Feedback
- Inhibit Pin for Electrical ON/OFF
- Isolated Synchronization Input
- Low Mass 120g
- Flight Proven Technology with >8.22 x 10^6 Hours of MTBF
- Product is Classified as EAR99
- Customization of Input/Output Voltages Available Upon Request

© 2022-2023 Microchip Technology Inc. and its subsidiaries

2. Radiation Performance

- TID >100 krad (Si) and 30 krad (Si) ELDRS (<10 mrad/s) per MIL-STD-883 Method 1019
- SEE (SEGR, SEB, SET, SEL) immunity 82 MeV·cm^2/mg

© 2022-2023 Microchip Technology Inc. and its subsidiaries

3. Typical Applications Circuits

Figure 3-1. SA50-28T Single Typical Application Circuit

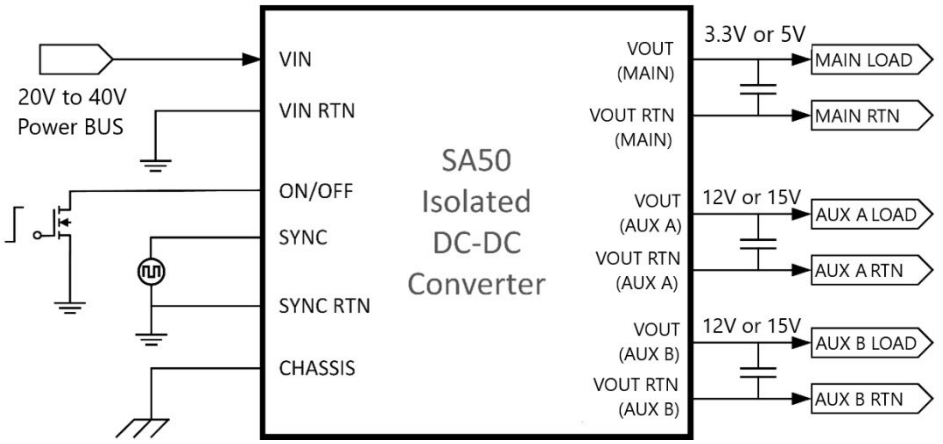

Figure 3-2. SA50-28T AUX Outputs Parallel Application Circuit

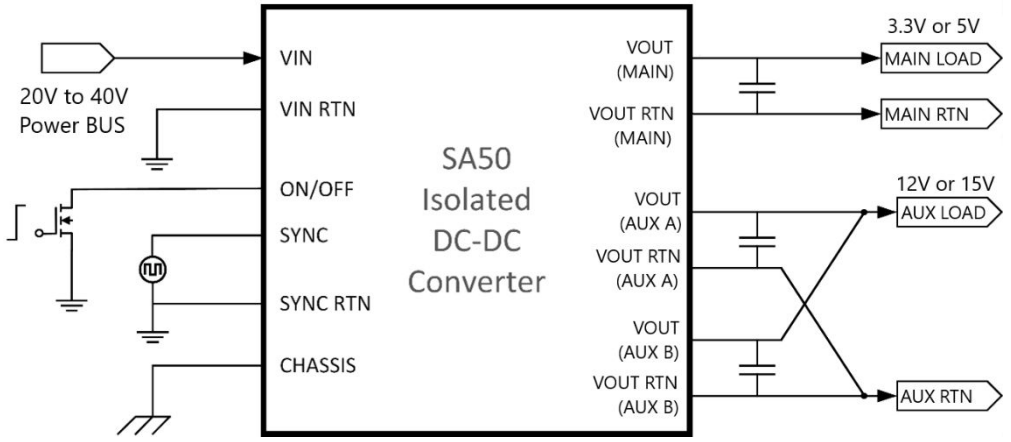

Figure 3-3. SA50-28T AUX Split Outputs Application Circuit

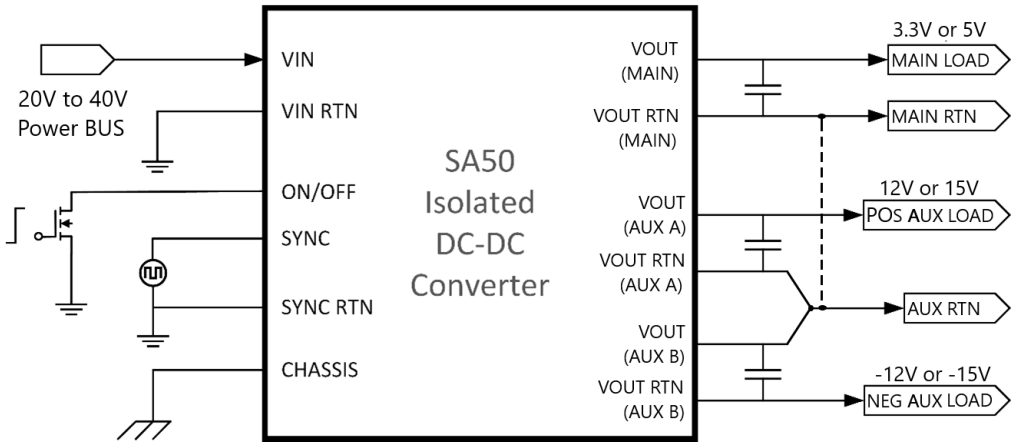

Note: With each output of the SA50 isolated from each other, there are more possible connections. These are circuits that will be found in typical applications.

© 2022-2023 Microchip Technology Inc. and its subsidiaries

4. Absolute Maximum Ratings

Rating	Value
V_{IN} range	-0.5 VDC to 60 VDC
Output power	50 W
Lead temperature	300°C for 10 s
Operating temperature	-55°C to 125°C
Storage temperature	-55°C to 125°C
Shock	1500 g_{pk}, 0.5 ms, ½ sine
Constant acceleration	50 g
Random vibration	24.06 g_{rms}, 50 Hz to 2000 Hz

© 2022-2023 Microchip Technology Inc. and its subsidiaries

5. Electrical Parameters

This section shows the electrical parameters of the SA50-28 Triple Series device under the following conditions unless otherwise specified:

Parameter	Output	Conditions	Min	Nom	Max	Units
Input voltage all configurations						
(Vin)	—	Note 2	20	28	40	V
Output Voltages by configuration (V_{out})						
SA50-28-3R3-12T-x-x		I_{OUT} = 100% rated load				V
(MAIN)	3.3V		3.27	3.30	3.33	
(AUX A/B)	12V		11.59	12.00	12.41	
SA50-28-3R3-15T-x-x						
(MAIN)	3.3V		3.27	3.30	3.33	
(AUX A/B)	15V		14.25	14.75	15.25	
SA50-28-5-12T-x-x						
(MAIN)	5V		5.08	5.10	5.12	
(AUX A/B)	12V		11.75	12.00	12.24	
SA50-28-5-15T-x-x						
(MAIN)	5V		5.08	5.10	5.12	
(AUX A/B)	15V		14.25	14.75	15.25	
Output Power by configuration (P_{out})						
SA50-28-3R3-12T-x-x		Note 3	4.32	—	43	W
SA50-28-3R3-15T-x-x			4.32	—	43	
SA50-28-5-12T-x-x			5.0	—	50	
SA50-28-5-15T-x-x			5.0	—	50	

© 2022-2023 Microchip Technology Inc. and its subsidiaries

.....continued

Parameter	Output	Conditions	Min	Nom	Max	Units
Output current by configuration (I_{out})						
SA50-28-3R3-12T-x-x		In all cases, output power must be kept within P_{out} rating. Note 13, 14, 15, 16				mA
(MAIN)	3.3V		400	—	4000	
(AUX A/B)	12V		125	—	1250	
SA50-28-3R3-15T-x-x						
(MAIN)	3.3V		400	—	4000	
(AUX A/B)	15V		100	—	1000	
SA50-28-5-12T-x-x						
(MAIN)	5V		400	—	4000	
(AUX A/B)	12V		125	—	1250	
SA50-28-5-15T-x-x						
(MAIN)	5V		400	—	4000	
(AUX A/B)	15V		100	—	1000	
Line regulation by configuration (VR_{LINE})						
SA50-28-3R3-12T-x-x		V_{IN} = 20V, 28V, 40V I_{OUT} = 10%, 50%, 100% rated Note 12				mV
(MAIN)	3.3V		-10	—	10	
(AUX A/B)	12V		-120	—	120	
SA50-28-3R3-15T-x-x						
(MAIN)	3.3V		-10	—	10	
(AUX A/B)	15V		-150	—	150	
SA50-28-5-12T-x-x						
(MAIN)	5V		-10	—	10	
(AUX A/B)	12V		-120	—	120	
SA50-28-5-15T-x-x						
(MAIN)	5V		-10	—	10	
(AUX A/B)	15V		-150	—	150	

© 2022-2023 Microchip Technology Inc. and its subsidiaries

.....continued

Parameter	Output	Conditions	Min	Nom	Max	Units
Load regulation by configuration (VR_{LOAD})						
SA50-28-3R3-12T-x-x		V_{IN} = 20V, 28V, 40V I_{OUT} = 10%, 50%, 100% rated Note 11				mV
(MAIN)	3.3V		-50	—	50	
(AUX A/B)	12V		-400	—	400	
SA50-28-3R3-15T-x-x						
(MAIN)	3.3V		-50	—	50	
(AUX A/B)	15V		-500	—	500	
SA50-28-5-12T-x-x						
(MAIN)	5V		-50	—	50	
(AUX A/B)	12V		-400	—	400	
SA50-28-5-15T-x-x						
(MAIN)	5V		-50	—	50	
(AUX A/B)	15V		-500	—	500	
Cross regulation (VR_{cross})						
(Aux)	—	V_{IN} = 20V, 28V, 40V I_{OUT} = 2.5A to 1A and 2.5A to 4A on main, and ±half the rated current on the Aux outputs	-3.0	—	3.0	%
Input current all configurations (I_{IN})						
(Iin)	—	I_{OUT}=0, pin3 open	—	100	150	mA
		Pin 3 short to pin 2		2	5	
Output ripple all configurations (V_{RIP})						
(Main)	—	V_{IN} = 20V, 28V, 40V I_{OUT} = 100% rated, Note 4	—	25	50	mVpp
(Aux)	—		—	37.5	75	
Switching frequency all configurations (FS)						
(FS)	—	Sync input (pin 4) open	200	220	240	kHz
Efficiency by configuration (eff)						
SA50-28-3R3-12T-x-x		I_{OUT} = 100% rated load	75	84	—	%
SA50-28-3R3-15T-x-x			75	84	—	
SA50-28-5-12T-x-x			80	84	—	
SA50-28-5-15T-x-x			80	84	—	

© 2022-2023 Microchip Technology Inc. and its subsidiaries

.....continued

Parameter	Output	Conditions	Min	Nom	Max	Units
Inhibit input all configurations						
Inhibit input: ON Threshold		Note 1	4.5	—	—	V
Inhibit input: OFF (sink)			1000	—	—	µA
Inhibit input: OFF threshold			—	—	2	V
Current limit all configurations						
Current limit point (% rated output)		When V_{OUT} = 90% of nominal set point	105	—	145	%
Synchronization all configurations						
Synchronization frequency range		The external clock on sync input (pin 4) Note 1	500	—	600	kHz
Synchronization pulse-high level			4.0	—	10.0	V
Synchronization pulse-low level			–0.5	—	0.5	V
Synchronization pulse-transition rate			200	—	—	V/µs
Synchronization pulse-duty cycle			10	—	80	%
Power dissipation all conditions, load fault						
(P_D)	—	Short circuit, overload, Note 6	—	—	22	W
Output response to step load changes all configurations						
(V_{TLD})	—	(50% to/from 100%) rated load Note 7	-300	—	300	mVpk
Recovery time, step load changes all configurations						
(T_{TLD})	—	(50% to/from 100%) rated load Notes 7, 8	—	200	2000	µs
Output response to step line changes all configurations						
(V_{TLN})	—	20V to / from 40V I_{OUT} = 100% rated load Note 9	–300	—	300	mVpk
Recovery time, step line changes all configurations						
(T_{TLN})	—	20V to/from 40V I_{OUT} = 100% rated load Notes 8, 9	—	50	2000	µs

© 2022-2023 Microchip Technology Inc. and its subsidiaries

.....continued

Parameter	Output	Conditions	Min	Nom	Max	Units
Turn-on response: overshoot by configuration (V_{OS}) (main)						
SA50-28-3R3-12T-x-x		(0% to 100%) rated load Notes 3, 4, 10				mV
(MAIN)	3.3V		—	—	500	
(AUX A/B)	12V		—	—	750	
SA50-28-3R3-15T-x-x						
(MAIN)	3.3V		—	—	500	
(AUX A/B)	15V		—	—	750	
SA50-28-5-12T-x-x						
(MAIN)	5V		—	—	500	
(AUX A/B)	12V		—	—	750	
SA50-28-5-15T-x-x						
(MAIN)	5V		—	—	500	
(AUX A/B)	15V		—	—	750	
Turn-on response: turn-on delay all configurations						
(T_{DLY})	—	Note 10	0.1	—	10	ms
Capacitive load by configuration (C_{LOAD})						
SA50-28-3R3-12T-x-x		Note 5				µF
(MAIN)	3.3V		—	—	1000	
(AUX A/B)	12V		—	—	250	
SA50-28-3R3-15T-x-x						
(MAIN)	3.3V		—	—	1000	
(AUX A/B)	15V		—	—	200	
SA50-28-5-12T-x-x						
(MAIN)	5V		—	—	1000	
(AUX A/B)	12V		—	—	250	
SA50-28-5-15T-x-x						
(MAIN)	5V		—	—	1000	
(AUX A/B)	15V		—	—	200	
Line rejection						
—	—	DC to 50 kHz, I_{OUT} = 100% rated load	40	60	—	dB

© 2022-2023 Microchip Technology Inc. and its subsidiaries

.....continued

Parameter	Output	Conditions	Min	Nom	Max	Units
Isolation						
—	—	50V @25°C 1. Input (1-3) to All (4-12) 2. Sync (4-5) to All (1-3, 6-12) 3. Chassis (6) to All (1-5, 7-12)	100	—	—	MΩ
Mass						
—	—	Standard case style A, B	—	120		g
MTBF						
—	—	MIL-HDBK-217F2, SF, 35°C	—	8.22×10^6	—	hrs

© 2022-2023 Microchip Technology Inc. and its subsidiaries

6. Radiation Specification (Note 1)

Environment	Conditions	Min	Unit
TID (gamma)	MIL-STD-883, method 1019 The operating bias applied during exposure	100	krad (Si)
Neutron fluence	MIL-STD-883, 1017	1E12	Neutrons
SEE/SEU, SEL, SEGR, SEB	Heavy ions [LET] The operating bias applied during exposure	82	MeV•cm^2/mg

Notes:

1. Parameter not 100% tested, and only assured by design.
2. Parameter verified during line and load regulation tests. Regulation is specified for 10% to 100% loading on all outputs.
3. The "–H" option incorporates FET technology providing a > 82 MeV•cm2/mg (gold ion) SEE capability to the design. The "–P" option is not rated for radiation.
4. Tested and verified using a 20 kHz to 10 MHz bandwidth. Ripple is measured across a 50 Ohms termination with a 10 nF Cap in series. Results applicable for DC to 20 MHz bandwidth.
5. The capacitive load may be any value from 0 to the maximum limit without compromising DC performance. A capacitive load exceeding the maximum limit may interfere with the proper operation of the converter's overload protection, potentially causing erratic behavior during turn-on.
6. Overload power dissipation is defined as the device power dissipation with the load set such that V_{OUT} = 90% of nominal.
7. The load step transition time is ≥ 10 µs.
8. Recovery time is measured from the initiation of the transient to where V_{OUT} has returned to within ±1% of its steady-state value.
9. The line step transition time is ≥ 100 µs.
10. Turn-on delay time from either a step application of input power or a logic low to a logic high transition on the inhibit pin (pin 3) to the point where V_{OUT} = 90% of nominal.
11. Load regulation relative to the output voltage at 50% rated load.
12. Line regulation relative to the output voltage at 28 VDC input.
13. For operation at temperatures between 85 °C and 125 °C, de-rate power linearly from 50W (or rated maximum) to zero. Parameter limits are not guaranteed.
14. Auxiliary output regulation is not maintained if main output load is less than 10%.
15. Auxiliary output requires at least 10% loading for specified regulation. Voltage may increase at lighter loads and is limited by overvoltage Zener diodes.
16. Unless otherwise specified, rated load means 20W on the main and 15W on each Auxiliary output. Other load settings are acceptable provided the total of 50W is not exceeded and minimum output current limits are satisfied.

© 2022-2023 Microchip Technology Inc. and its subsidiaries

7. Sample Electrical Waveforms (For Reference Only)

Figure 7-1. SA50-28 Efficiency

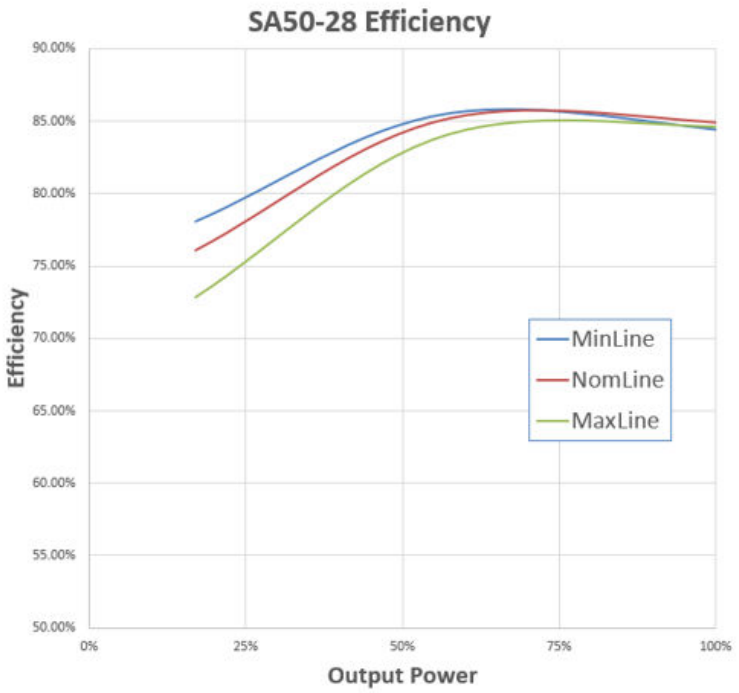

Figure 7-2. SA50-28 EMI

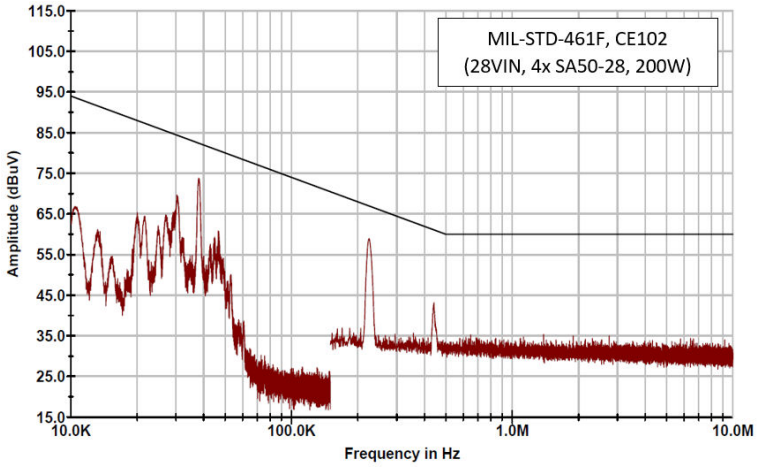

© 2022-2023 Microchip Technology Inc. and its subsidiaries

Figure 7-3. Typical Output Ripple

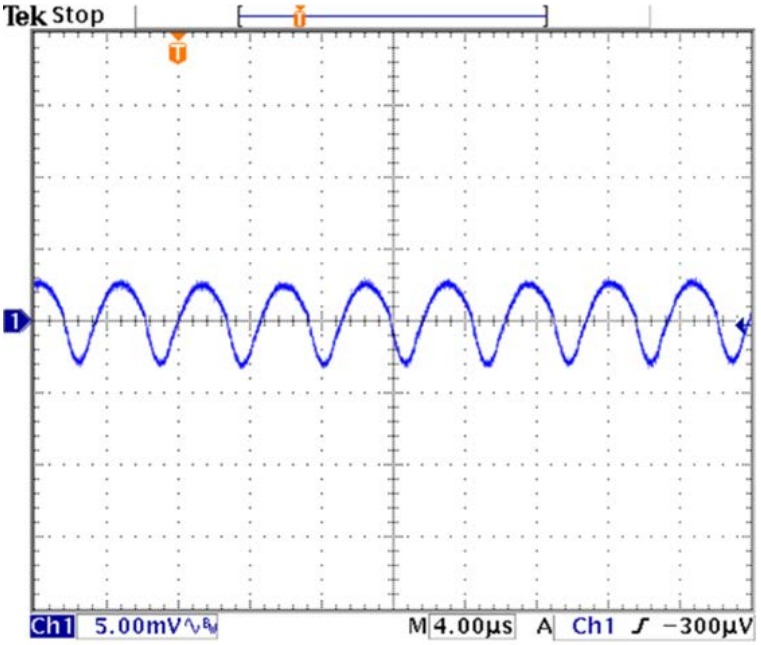

Figure 7-4. Typical 50% Load Step Transient Response

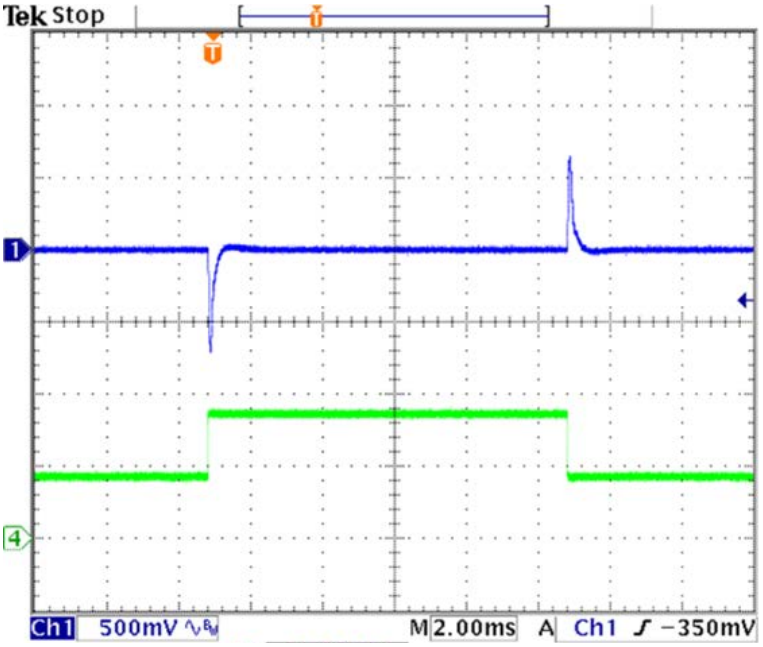

© 2022-2023 Microchip Technology Inc. and its subsidiaries

8. Pin Configuration

Figure 8-1. SA50-28 Triple Pin Configuration

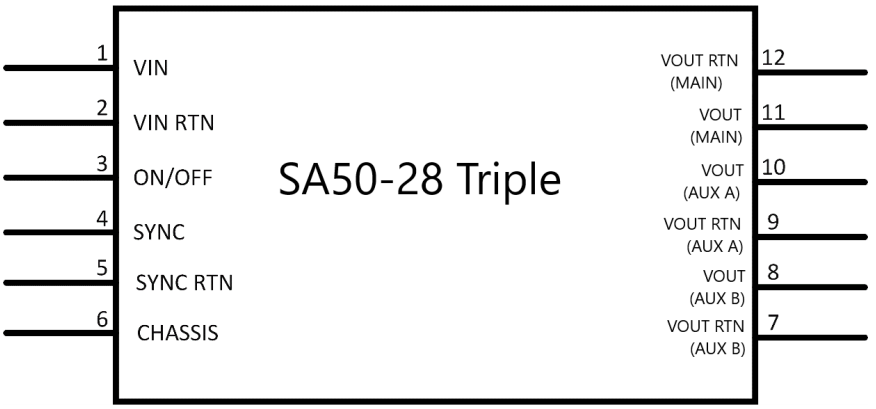

© 2022-2023 Microchip Technology Inc. and its subsidiaries

9. Pin Description

PIN	NAME	Description
1	VIN	Input Voltage
2	VIN RTN	Input Voltage Return/Ground
3	ON/OFF (INHIBIT)	Power Supply ON/OFF, [ON(OPEN/HIGH), OFF(SHORT/LOW)]
4	SYNC	External Clock Signal Input
5	SYNC RTN	External Clock Signal Return
6	CHASSIS	Chassis Pin
7	VOUT (AUX B) RTN	Auxiliary B Vout return
8	VOUT (AUX B)	Auxiliary B Vout
9	VOUT (AUX A) RTN	Auxiliary A Vout return
10	VOUT (AUX A)	Auxiliary A Vout
11	VOUT (MAIN)	Main Vout
12	VOUT (MAIN) RTN	Main Vout return

© 2022-2023 Microchip Technology Inc. and its subsidiaries

10. Radiation Performance (-H) Hardened

- TID >100 krad (Si) and 30 krad (Si) ELDRS (<10 mrad/s) per MIL-STD-883 Method 1019
- SEE (SEGR, SEB, SET, SEL) immunity 82 MeV·cm^2/mg (H-hardened)

© 2022-2023 Microchip Technology Inc. and its subsidiaries

11. Radiation Performance (-P) Prototype

Prototype units that are functionally the same except that components are not radiation hardened. To be used for system checkout.

© 2022-2023 Microchip Technology Inc. and its subsidiaries

12. Mechanical Outline (Axial Pins) Package

Figure 12-1. Axial Pins and Thru-hole Tabs Package (-A)

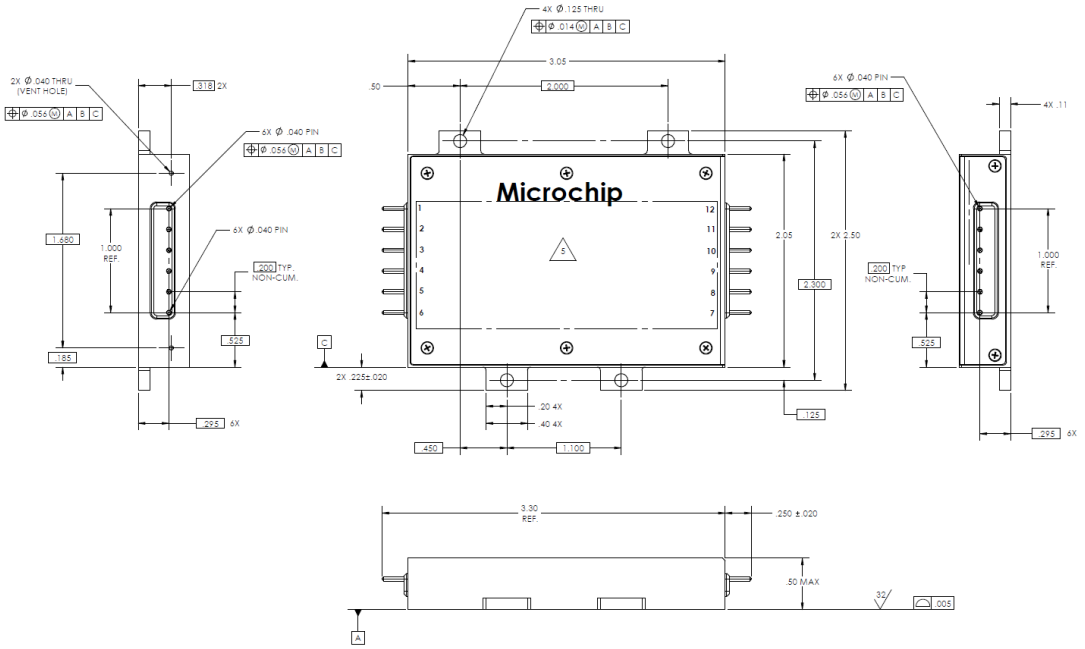

Figure 12-2. Axial Pins and Threaded Tabs Package Bottom View (-C or -E)

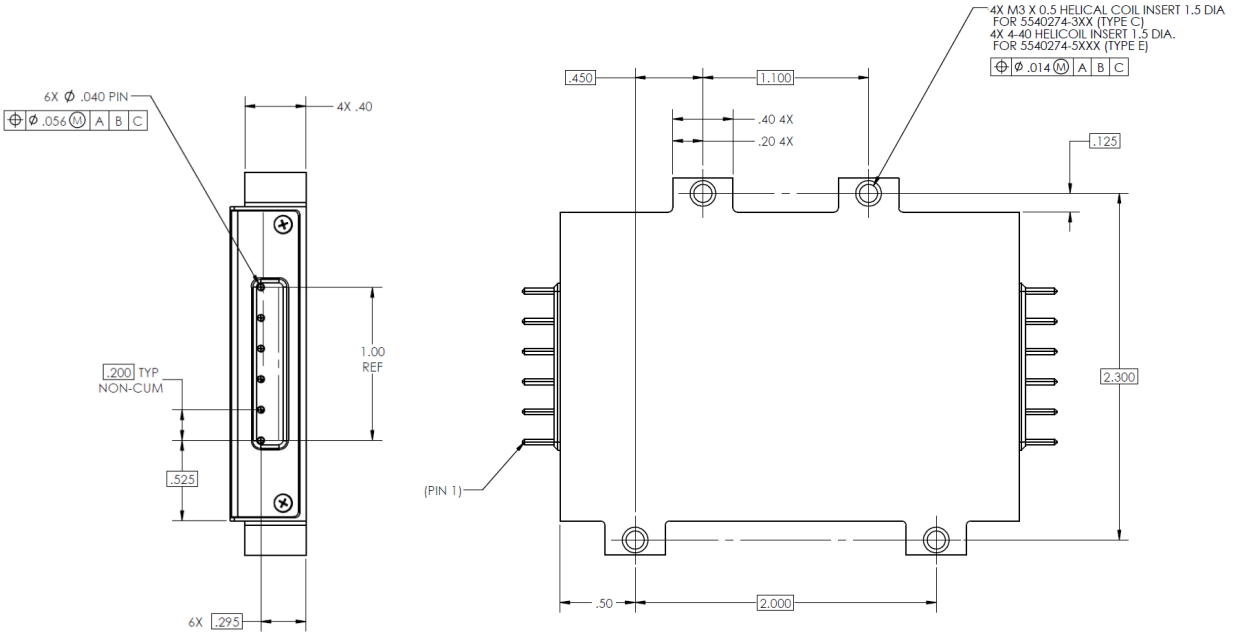

© 2022-2023 Microchip Technology Inc. and its subsidiaries

13. Mechanical Outline (Radial Pins) Package

Figure 13-1. Radial Pins and Thru-Hole Tabs Package (-D)

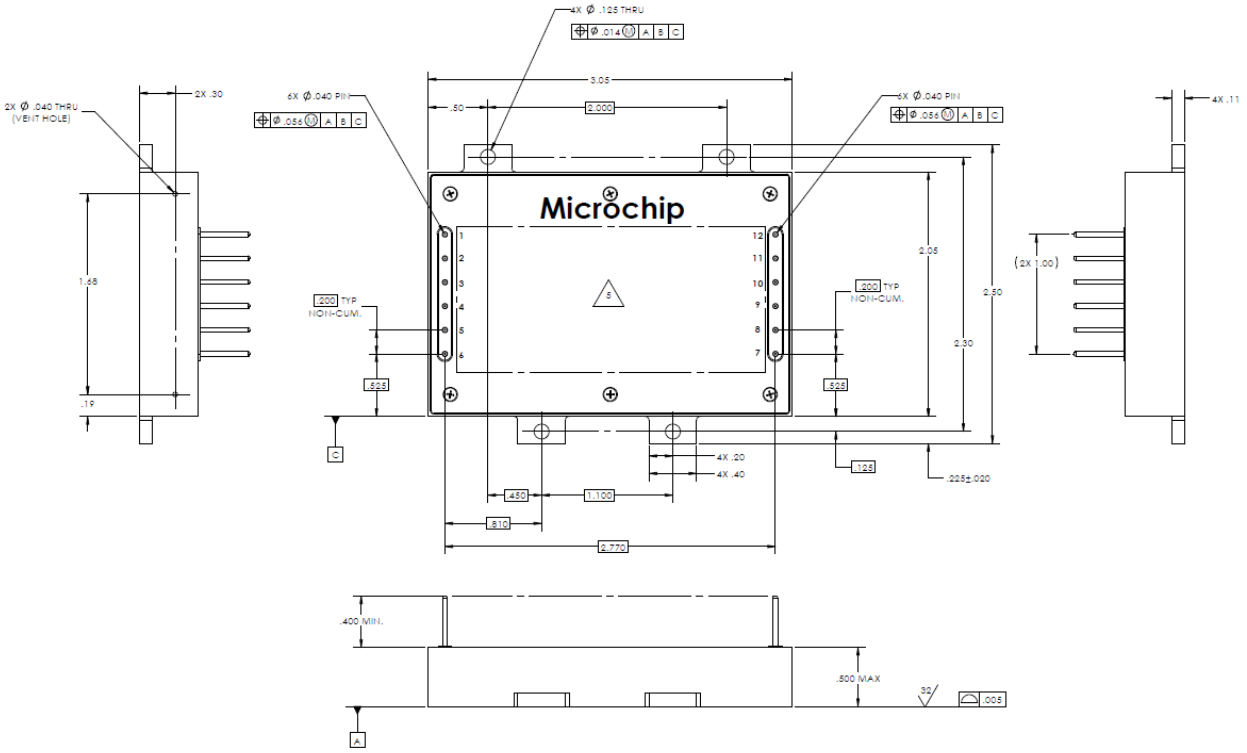

Figure 13-2. Axial Pins and Threaded Tabs Package Bottom View (-B or -F)

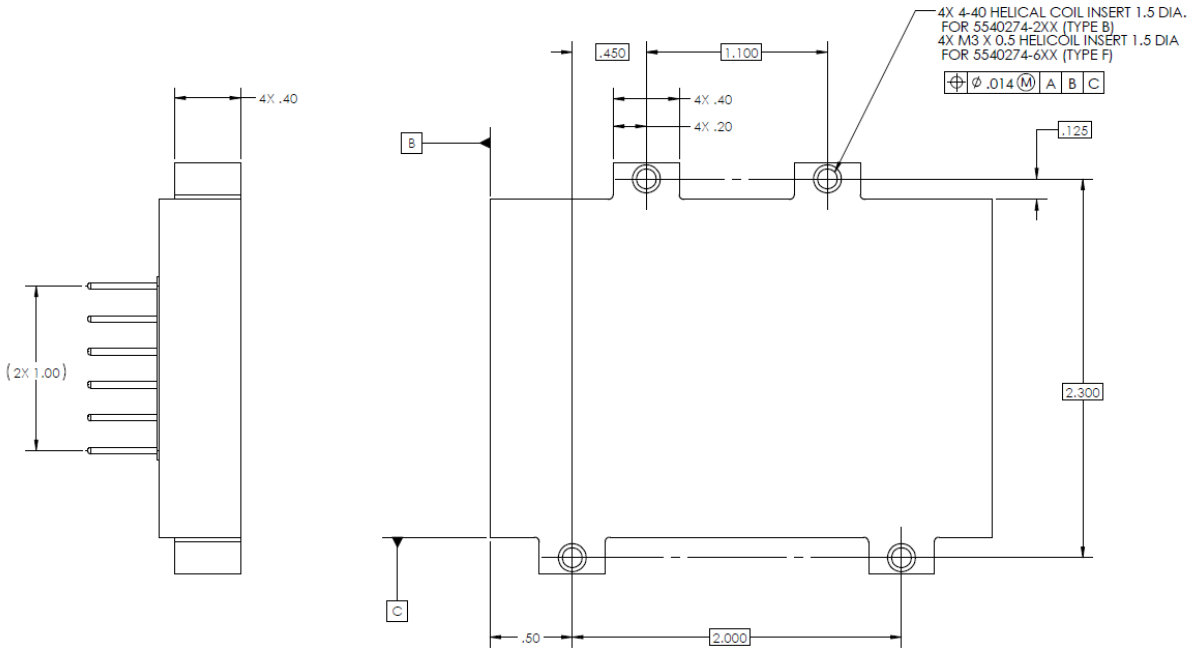

© 2022-2023 Microchip Technology Inc. and its subsidiaries

14. Qualification Test (Reference Report QTR996)

Test	Conditions
External Visual	Per O&M – Dimensions, and mass or STD 883 2009
Electrical	Read and record (-55°C, 25°C, 85°C)
Shock, Non-Operating	MIL-STD-202, method 213, test condition F, 1500 gpk, 0.5 ms ½ sine pulse. Three pulses in each direction of each axis, 18 pulses total.
Vibration, Operating	MIL-STD-202, method 214, condition II-F, 24.06 grms random vibrations, 50 Hz – 2000 Hz, 3 min/axis (9 min total). Outputs monitored.
Temperature Cycling	10 cycles from base plate temperature, MIL-STD-883, method 1010.9, condition C
EMI	CE101, CE102, CS101, RE101, RE102, RS101, RS103 per MIL-STD-461 with setup per MIL-STD-462.
External Visual Inspection	No damage
Steady State Life Test	1000 hrs at Tc = 105°C, 50% of rated load
End-Point Electricals	Read and record (-55°C, 25°C, 85°C)

© 2022-2023 Microchip Technology Inc. and its subsidiaries

15. ATP Screening Test (-H) Hardened

Requirement	Test Method/Condition
External Visual	O&M – Dimensions and mass
Initial Electrical	Full performance at +25°C
Vibration	Workmanship non-operating vibration MIL-STD-202, Method 214, Condition II-A, 6.21 grms random vibration, 50-2000 Hz, 1-minute perpendicular to the board
Post Vibration Electrical	Full performance at +25°C
Temperature Cycle	MIL-STD-883, Method 1010, Condition A, 1 cycle, +85°C to -55°C, operating Outputs monitored during thermal cycles
Burn-in	40 Hrs @ 105°C, 50% of rated load (outputs monitored)
Final Electrical	Full performance at +25°C (deliverable data)
External Visual	No damage

© 2022-2023 Microchip Technology Inc. and its subsidiaries

16. ATP Screening Test (-P) Prototypes

Requirement	Test Method/Condition
External Visual	O&M – Dimensions and mass
Electrical	Full performance at +25°C
Vibration	None
Temperature Cycle	None
Burn-in	None
External Visual	No damage

© 2022-2023 Microchip Technology Inc. and its subsidiaries

17. Ordering Information

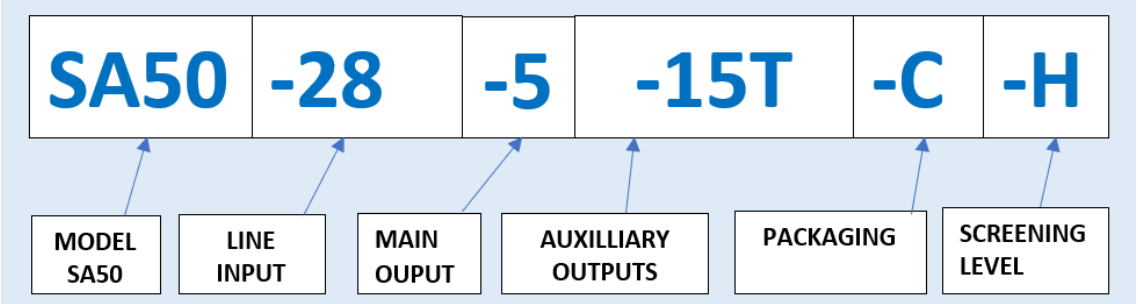

Model	SA50	Standard Applications 50W, 28V input modules		
Line input	-28	28.0V	Line input voltage. Nominal input line	
Main	-3R3	3.3V	Main output voltage	
	-5	5.0V		
Aux	-12T	12.0V	Auxiliary output voltages (A and B outputs identical) (T is for triple)	
	-15T	15.0V		
Mechanical Package	-A	Axial	0.125 in thru-hole	Mechanical packaging options. Electrical connections are either Radial or Axial. Mounting holes are drilled thru-hole or Threaded.
	-B	Radial	4-40 thread	
	-C	Axial	M3 thread	
	-D	Radial	0.125 in thru-hole	
	-E	Axial	4-40 thread	
	-F	Radial	M3 thread	
Radiation Hardness	-H	Hardened	Microchip offers units with two levels of radiation screening. Hardened and Prototype (non-hardened) units.	
	-P	Prototype		

Note: Other input voltage and output voltage combinations are available. Contact your local sales representative.

Microchip also offers a thermal interface, the ST-2X3; this is a non-silicon, space-approved thermal interface. The data sheet is available upon request.

© 2022-2023 Microchip Technology Inc. and its subsidiaries

18. Revision History

Revision	Date	Description
E	07/2023	Updates: • 5. Electrical Parameters – Updated Min and Max values for output power • 6. Radiation Specification (Note 1) – Removed dose rate environment • 7. Sample Electrical Waveforms (For Reference Only) – Updated 3rd and 4th graph • 12. Mechanical Outline (Axial Pins) Package – Updated heading and figures • 13. Mechanical Outline (Radial Pins) Package – Updated heading and figures • 14. Qualification Test (Reference Report QTR996) – Updated conditions for Shock, non-operating; Vibration, operating; EMI • 15. ATP Screening Test (-H) Hardened – Updated Vibration test method/condition
D	07/2022	Updated Electrical information in the ATP Screening Test (-P) Prototypes table.
C	04/2022	Updated Figure 13-1.

© 2022-2023 Microchip Technology Inc. and its subsidiaries

Microchip Information

The Microchip Website

Microchip provides online support via our website at www.microchip.com/. This website is used to make files and information easily available to customers. Some of the content available includes:

- **Product Support** – Data sheets and errata, application notes and sample programs, design resources, user's guides and hardware support documents, latest software releases and archived software
- **General Technical Support** – Frequently Asked Questions (FAQs), technical support requests, online discussion groups, Microchip design partner program member listing
- **Business of Microchip** – Product selector and ordering guides, latest Microchip press releases, listing of seminars and events, listings of Microchip sales offices, distributors and factory representatives

Product Change Notification Service

Microchip's product change notification service helps keep customers current on Microchip products. Subscribers will receive email notification whenever there are changes, updates, revisions or errata related to a specified product family or development tool of interest.

To register, go to www.microchip.com/pcn and follow the registration instructions.

Customer Support

Users of Microchip products can receive assistance through several channels:

- Distributor or Representative
- Local Sales Office
- Embedded Solutions Engineer (ESE)
- Technical Support

Customers should contact their distributor, representative or ESE for support. Local sales offices are also available to help customers. A listing of sales offices and locations is included in this document.

Technical support is available through the website at: www.microchip.com/support

Microchip Devices Code Protection Feature

Note the following details of the code protection feature on Microchip products:

- Microchip products meet the specifications contained in their particular Microchip Data Sheet.
- Microchip believes that its family of products is secure when used in the intended manner, within operating specifications, and under normal conditions.
- Microchip values and aggressively protects its intellectual property rights. Attempts to breach the code protection features of Microchip product is strictly prohibited and may violate the Digital Millennium Copyright Act.
- Neither Microchip nor any other semiconductor manufacturer can guarantee the security of its code. Code protection does not mean that we are guaranteeing the product is "unbreakable". Code protection is constantly evolving. Microchip is committed to continuously improving the code protection features of our products.

Legal Notice

This publication and the information herein may be used only with Microchip products, including to design, test, and integrate Microchip products with your application. Use of this information in any other manner violates these terms. Information regarding device applications is provided only for your convenience and may be superseded by updates. It is your responsibility to ensure

© 2022-2023 Microchip Technology Inc. and its subsidiaries

that your application meets with your specifications. Contact your local Microchip sales office for additional support or, obtain additional support at www.microchip.com/en-us/support/design-help/client-support-services.

THIS INFORMATION IS PROVIDED BY MICROCHIP "AS IS". MICROCHIP MAKES NO REPRESENTATIONS OR WARRANTIES OF ANY KIND WHETHER EXPRESS OR IMPLIED, WRITTEN OR ORAL, STATUTORY OR OTHERWISE, RELATED TO THE INFORMATION INCLUDING BUT NOT LIMITED TO ANY IMPLIED WARRANTIES OF NON-INFRINGEMENT, MERCHANTABILITY, AND FITNESS FOR A PARTICULAR PURPOSE, OR WARRANTIES RELATED TO ITS CONDITION, QUALITY, OR PERFORMANCE.

IN NO EVENT WILL MICROCHIP BE LIABLE FOR ANY INDIRECT, SPECIAL, PUNITIVE, INCIDENTAL, OR CONSEQUENTIAL LOSS, DAMAGE, COST, OR EXPENSE OF ANY KIND WHATSOEVER RELATED TO THE INFORMATION OR ITS USE, HOWEVER CAUSED, EVEN IF MICROCHIP HAS BEEN ADVISED OF THE POSSIBILITY OR THE DAMAGES ARE FORESEEABLE. TO THE FULLEST EXTENT ALLOWED BY LAW, MICROCHIP'S TOTAL LIABILITY ON ALL CLAIMS IN ANY WAY RELATED TO THE INFORMATION OR ITS USE WILL NOT EXCEED THE AMOUNT OF FEES, IF ANY, THAT YOU HAVE PAID DIRECTLY TO MICROCHIP FOR THE INFORMATION.

Use of Microchip devices in life support and/or safety applications is entirely at the buyer's risk, and the buyer agrees to defend, indemnify and hold harmless Microchip from any and all damages, claims, suits, or expenses resulting from such use. No licenses are conveyed, implicitly or otherwise, under any Microchip intellectual property rights unless otherwise stated.

Trademarks

The Microchip name and logo, the Microchip logo, Adaptec, AVR, AVR logo, AVR Freaks, BesTime, BitCloud, CryptoMemory, CryptoRF, dsPIC, flexPWR, HELDO, IGLOO, JukeBlox, KeeLoq, Kleer, LANCheck, LinkMD, maXStylus, maXTouch, MediaLB, megaAVR, Microsemi, Microsemi logo, MOST, MOST logo, MPLAB, OptoLyzer, PIC, picoPower, PICSTART, PIC32 logo, PolarFire, Prochip Designer, QTouch, SAM-BA, SenGenuity, SpyNIC, SST, SST Logo, SuperFlash, Symmetricom, SyncServer, Tachyon, TimeSource, tinyAVR, UNI/O, Vectron, and XMEGA are registered trademarks of Microchip Technology Incorporated in the U.S.A. and other countries.

AgileSwitch, APT, ClockWorks, The Embedded Control Solutions Company, EtherSynch, Flashtec, Hyper Speed Control, HyperLight Load, Libero, motorBench, mTouch, Powermite 3, Precision Edge, ProASIC, ProASIC Plus, ProASIC Plus logo, Quiet- Wire, SmartFusion, SyncWorld, Temux, TimeCesium, TimeHub, TimePictra, TimeProvider, TrueTime, and ZL are registered trademarks of Microchip Technology Incorporated in the U.S.A.

Adjacent Key Suppression, AKS, Analog-for-the-Digital Age, Any Capacitor, AnyIn, AnyOut, Augmented Switching, BlueSky, BodyCom, Clockstudio, CodeGuard, CryptoAuthentication, CryptoAutomotive, CryptoCompanion, CryptoController, dsPICDEM, dsPICDEM.net, Dynamic Average Matching, DAM, ECAN, Espresso T1S, EtherGREEN, GridTime, IdealBridge, In-Circuit Serial Programming, ICSP, INICnet, Intelligent Paralleling, IntelliMOS, Inter-Chip Connectivity, JitterBlocker, Knob-on-Display, KoD, maxCrypto, maxView, memBrain, Mindi, MiWi, MPASM, MPF, MPLAB Certified logo, MPLIB, MPLINK, MultiTRAK, NetDetach, Omniscient Code Generation, PICDEM, PICDEM.net, PICkit, PICtail, PowerSmart, PureSilicon, QMatrix, REAL ICE, Ripple Blocker, RTAX, RTG4, SAM-ICE, Serial Quad I/O, simpleMAP, SimpliPHY, SmartBuffer, SmartHLS, SMART-I.S., storClad, SQI, SuperSwitcher, SuperSwitcher II, Switchtec, SynchroPHY, Total Endurance, Trusted Time, TSHARC, USBCheck, VariSense, VectorBlox, VeriPHY, ViewSpan, WiperLock, XpressConnect, and ZENA are trademarks of Microchip Technology Incorporated in the U.S.A. and other countries.

SQTP is a service mark of Microchip Technology Incorporated in the U.S.A.

The Adaptec logo, Frequency on Demand, Silicon Storage Technology, and Symmcom are registered trademarks of Microchip Technology Inc. in other countries.

GestIC is a registered trademark of Microchip Technology Germany II GmbH & Co. KG, a subsidiary of Microchip Technology Inc., in other countries.

All other trademarks mentioned herein are property of their respective companies.

© 2022-2023 Microchip Technology Inc. and its subsidiaries

© 2022-2023, Microchip Technology Incorporated and its subsidiaries. All Rights Reserved.

ISBN: 978-1-6683-2684-8

Quality Management System

For information regarding Microchip's Quality Management Systems, please visit www.microchip.com/quality.

Worldwide Sales and Service

AMERICAS	ASIA/PACIFIC	ASIA/PACIFIC	EUROPE
Corporate Office	**Australia - Sydney**	**India - Bangalore**	**Austria - Wels**
2355 West Chandler Blvd.	Tel: 61-2-9868-6733	Tel: 91-80-3090-4444	Tel: 43-7242-2244-39
Chandler, AZ 85224-6199	**China - Beijing**	**India - New Delhi**	Fax: 43-7242-2244-393
Tel: 480-792-7200	Tel: 86-10-8569-7000	Tel: 91-11-4160-8631	**Denmark - Copenhagen**
Fax: 480-792-7277	**China - Chengdu**	**India - Pune**	Tel: 45-4485-5910
Technical Support:	Tel: 86-28-8665-5511	Tel: 91-20-4121-0141	Fax: 45-4485-2829
www.microchip.com/support	**China - Chongqing**	**Japan - Osaka**	**Finland - Espoo**
Web Address:	Tel: 86-23-8980-9588	Tel: 81-6-6152-7160	Tel: 358-9-4520-820
www.microchip.com	**China - Dongguan**	**Japan - Tokyo**	**France - Paris**
Atlanta	Tel: 86-769-8702-9880	Tel: 81-3-6880- 3770	Tel: 33-1-69-53-63-20
Duluth, GA	**China - Guangzhou**	**Korea - Daegu**	Fax: 33-1-69-30-90-79
Tel: 678-957-9614	Tel: 86-20-8755-8029	Tel: 82-53-744-4301	**Germany - Garching**
Fax: 678-957-1455	**China - Hangzhou**	**Korea - Seoul**	Tel: 49-8931-9700
Austin, TX	Tel: 86-571-8792-8115	Tel: 82-2-554-7200	**Germany - Haan**
Tel: 512-257-3370	**China - Hong Kong SAR**	**Malaysia - Kuala Lumpur**	Tel: 49-2129-3766400
Boston	Tel: 852-2943-5100	Tel: 60-3-7651-7906	**Germany - Heilbronn**
Westborough, MA	**China - Nanjing**	**Malaysia - Penang**	Tel: 49-7131-72400
Tel: 774-760-0087	Tel: 86-25-8473-2460	Tel: 60-4-227-8870	**Germany - Karlsruhe**
Fax: 774-760-0088	**China - Qingdao**	**Philippines - Manila**	Tel: 49-721-625370
Chicago	Tel: 86-532-8502-7355	Tel: 63-2-634-9065	**Germany - Munich**
Itasca, IL	**China - Shanghai**	**Singapore**	Tel: 49-89-627-144-0
Tel: 630-285-0071	Tel: 86-21-3326-8000	Tel: 65-6334-8870	Fax: 49-89-627-144-44
Fax: 630-285-0075	**China - Shenyang**	**Taiwan - Hsin Chu**	**Germany - Rosenheim**
Dallas	Tel: 86-24-2334-2829	Tel: 886-3-577-8366	Tel: 49-8031-354-560
Addison, TX	**China - Shenzhen**	**Taiwan - Kaohsiung**	**Israel - Ra'anana**
Tel: 972-818-7423	Tel: 86-755-8864-2200	Tel: 886-7-213-7830	Tel: 972-9-744-7705
Fax: 972-818-2924	**China - Suzhou**	**Taiwan - Taipei**	**Italy - Milan**
Detroit	Tel: 86-186-6233-1526	Tel: 886-2-2508-8600	Tel: 39-0331-742611
Novi, MI	**China - Wuhan**	**Thailand - Bangkok**	Fax: 39-0331-466781
Tel: 248-848-4000	Tel: 86-27-5980-5300	Tel: 66-2-694-1351	**Italy - Padova**
Houston, TX	**China - Xian**	**Vietnam - Ho Chi Minh**	Tel: 39-049-7625286
Tel: 281-894-5983	Tel: 86-29-8833-7252	Tel: 84-28-5448-2100	**Netherlands - Drunen**
Indianapolis	**China - Xiamen**		Tel: 31-416-690399
Noblesville, IN	Tel: 86-592-2388138		Fax: 31-416-690340
Tel: 317-773-8323	**China - Zhuhai**		**Norway - Trondheim**
Fax: 317-773-5453	Tel: 86-756-3210040		Tel: 47-72884388
Tel: 317-536-2380			**Poland - Warsaw**
Los Angeles			Tel: 48-22-3325737
Mission Viejo, CA			**Romania - Bucharest**
Tel: 949-462-9523			Tel: 40-21-407-87-50
Fax: 949-462-9608			**Spain - Madrid**
Tel: 951-273-7800			Tel: 34-91-708-08-90
Raleigh, NC			Fax: 34-91-708-08-91
Tel: 919-844-7510			**Sweden - Gothenberg**
New York, NY			Tel: 46-31-704-60-40
Tel: 631-435-6000			**Sweden - Stockholm**
San Jose, CA			Tel: 46-8-5090-4654
Tel: 408-735-9110			**UK - Wokingham**
Tel: 408-436-4270			Tel: 44-118-921-5800
Canada - Toronto			Fax: 44-118-921-5820
Tel: 905-695-1980			
Fax: 905-695-2078			

© 2022-2023 Microchip Technology Inc. and its subsidiaries