APT31M100B2
APT31M100L

1000V, 32A, 0.38Ω Max

N-Channel MOSFET

Power MOS 8™ is a high speed, high voltage N-channel switch-mode power MOSFET. A proprietary planar stripe design yields excellent reliability and manufacturability. Low switching loss is achieved with low input capacitance and ultra low C_{rss} "Miller" capacitance. The intrinsic gate resistance and capacitance of the poly-silicon gate structure help control slew rates during switching, resulting in low EMI and reliable paralleling, even when switching at very high frequency. Reliability in flyback, boost, forward, and other circuits is enhanced by the high avalanche energy capability.

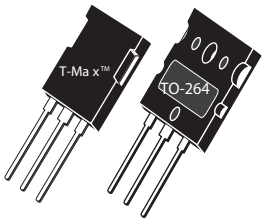

APT31M100B2 **APT31M100L**

Single die MOSFET

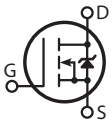

FEATURES

- **Fast switching with low EMI/RFI**
- **Low $R_{DS(on)}$**
- **Ultra low C_{rss} for improved noise immunity**
- **Low gate charge**
- **Avalanche energy rated**
- **RoHS compliant**

TYPICAL APPLICATIONS

- **PFC and other boost converter**
- **Buck converter**
- **Two switch forward (asymmetrical bridge)**
- **Single switch forward**
- **Flyback**
- **Inverters**

Absolute Maximum Ratings

Symbol	Parameter	Ratings	Unit
I_D	Continuous Drain Current @ T_C = 25°C	32	A
	Continuous Drain Current @ T_C = 100°C	20	
I_{DM}	Pulsed Drain Current ①	120	
V_{GS}	Gate-Source Voltage	±30	V
E_{AS}	Single Pulse Avalanche Energy ②	1875	mJ
I_{AR}	Avalanche Current, Repetitive or Non-Repetitive	16	A

Thermal and Mechanical Characteristics

Symbol	Characteristic	Min	Typ	Max	Unit
P_D	Total Power Dissipation @ T_C = 25°C			1040	W
$R_{\theta JC}$	Junction to Case Thermal Resistance			0.12	°C/W
$R_{\theta CS}$	Case to Sink Thermal Resistance, Flat, Greased Surface		0.11		
T_J,T_{STG}	Operating and Storage Junction Temperature Range	-55		150	°C
T_L	Soldering Temperature for 10 Seconds (1.6mm from case)			300	
W_T	Package Weight		0.22		oz
			6.2		g
Torque	Mounting Torque (TO-264 Package), 4-40 or M3 screw			10	in·lbf
				1.1	N·m

Static Characteristics T_J = 25°C unless otherwise specified APT31M100B2_L

Symbol	Parameter	Test Conditions	Min	Typ	Max	Unit
$V_{BR(DSS)}$	Drain-Source Breakdown Voltage	V_{GS} = 0V, I_D = 250μA	1000			V
$\Delta V_{BR(DSS)}/\Delta T_J$	Breakdown Voltage Temperature Coefficient	Reference to 25°C, I_D = 250μA		1.15		V/°C
$R_{DS(on)}$	Drain-Source On Resistance③	V_{GS} = 10V, I_D = 16A		0.34	0.38	Ω
$V_{GS(th)}$	Gate-Source Threshold Voltage	V_{GS} = V_{DS}, I_D = 2.5mA	3	4	5	V
$\Delta V_{GS(th)}/\Delta T_J$	Threshold Voltage Temperature Coefficient			-10		mV/°C
I_{DSS}	Zero Gate Voltage Drain Current	V_{DS} = 1000V, V_{GS} = 0V; T_J = 25°C			100	μA
		V_{DS} = 1000V, V_{GS} = 0V; T_J = 125°C			500	
I_{GSS}	Gate-Source Leakage Current	V_{GS} = ±30V			±100	nA

Dynamic Characteristics T_J = 25°C unless otherwise specified

Symbol	Parameter	Test Conditions	Min	Typ	Max	Unit
g_{fs}	Forward Transconductance	V_{DS} = 50V, I_D = 16A		34		S
C_{iss}	Input Capacitance	V_{GS} = 0V, V_{DS} = 25V f = 1MHz		8500		pF
C_{rss}	Reverse Transfer Capacitance			115		
C_{oss}	Output Capacitance			700		
$C_{o(cr)}$ ④	Effective Output Capacitance, Charge Related	V_{GS} = 0V, V_{DS} = 0V to 667V		290		
$C_{o(er)}$ ⑤	Effective Output Capacitance, Energy Related			150		
Q_g	Total Gate Charge	V_{GS} = 0 to 10V, I_D = 16A, V_{DS} = 500V		260		nC
Q_{gs}	Gate-Source Charge			46		
Q_{gd}	Gate-Drain Charge			125		
$t_{d(on)}$	Turn-On Delay Time	**Resistive Switching** V_{DD} = 667V, I_D = 16A R_G = 2.2Ω⑥, V_{GG} = 15V		39		ns
t_r	Current Rise Time			35		
$t_{d(off)}$	Turn-Off Delay Time			130		
t_f	Current Fall Time			33		

Source-Drain Diode Characteristics

Symbol	Parameter	Test Conditions	Min	Typ	Max	Unit
I_S	Continuous Source Current (Body Diode)	MOSFET symbol showing the integral reverse p-n junction diode (body diode) 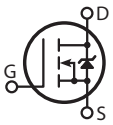			32	A
I_{SM}	Pulsed Source Current (Body Diode)①				120	
V_{SD}	Diode Forward Voltage	I_{SD} = 16A, T_J = 25°C, V_{GS} = 0V			1	V
t_{rr}	Reverse Recovery Time	I_{SD} = 16A③ di_{SD}/dt = 100A/μs, T_J = 25°C		1140		ns
Q_{rr}	Reverse Recovery Charge			30		μC
dv/dt	Peak Recovery dv/dt	I_{SD} ≤ 16A, di/dt ≤1000A/μs, V_{DD} = 667V, T_J = 125°C			10	V/ns

① Repetitive Rating: Pulse width and case temperature limited by maximum junction temperature.

② Starting at T_J = 25°C, L = 14.65mH, R_G = 2.2Ω, I_{AS} = 16A.

③ Pulse test: Pulse Width < 380μs, duty cycle < 2%.

④ $C_{o(cr)}$ is defined as a fixed capacitance with the same stored charge as C_{OSS} with V_{DS} = 67% of $V_{(BR)DSS}$.

⑤ $C_{o(er)}$ is defined as a fixed capacitance with the same stored energy as C_{OSS} with V_{DS} = 67% of $V_{(BR)DSS}$. To calculate $C_{o(cr)}$ for any value of V_{DS} less than $V_{(BR)DSS,}$ use this equation: $C_{o(er)}$ = -2.47E-7/V_{DS}^2 + 4.36E-8/V_{DS} + 8.44E-11.

⑥ R_G is external gate resistance, not including internal gate resistance or gate driver impedance. (MIC4452)

Microsemi reserves the right to change, without notice, the specifications and information contained herein.

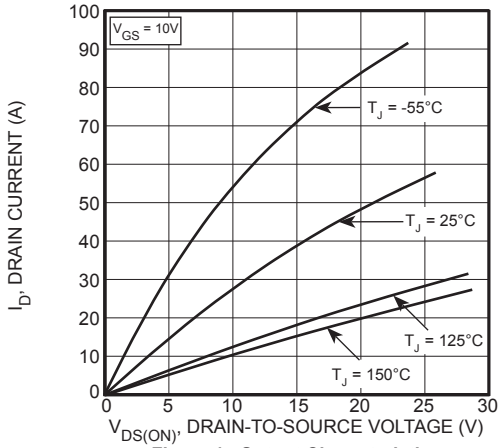

Figure 1, Output Characteristics

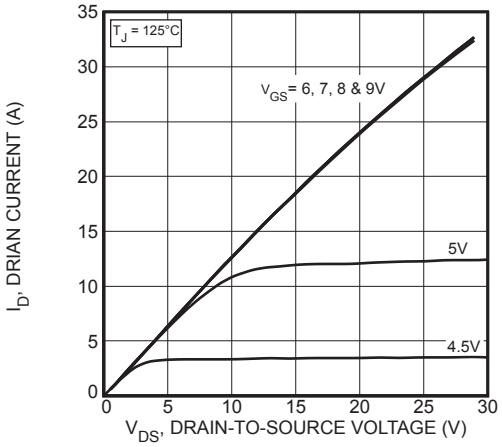

Figure 2, Output Characteristics

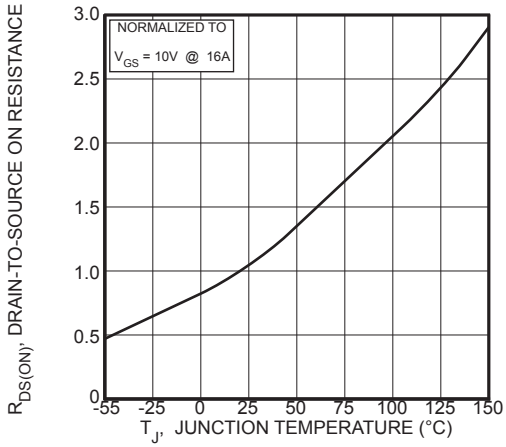

Figure 3, $R_{DS(ON)}$ vs Junction Temperature

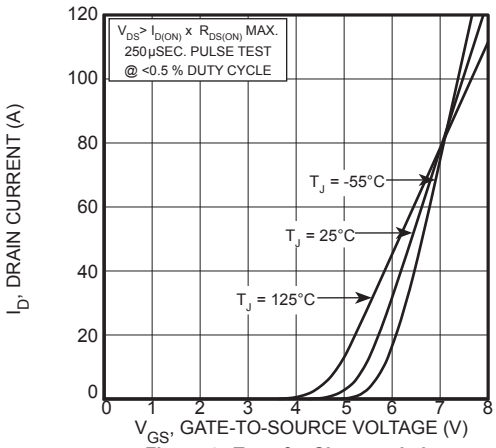

Figure 4, Transfer Characteristics

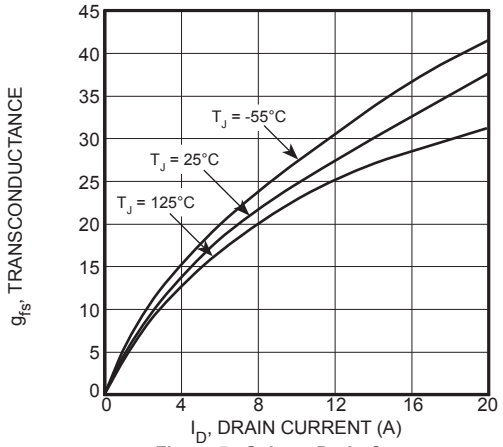

Figure 5, Gain vs Drain Current

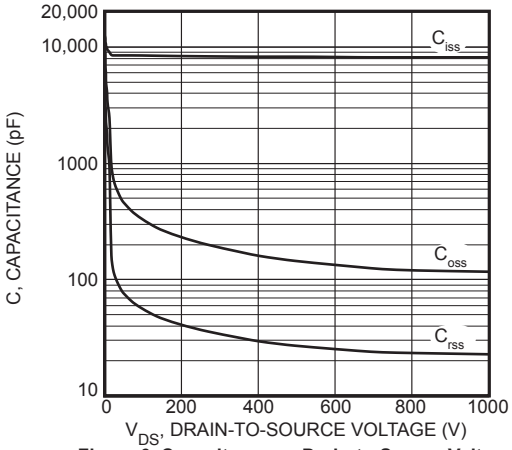

Figure 6, Capacitance vs Drain-to-Source Voltage

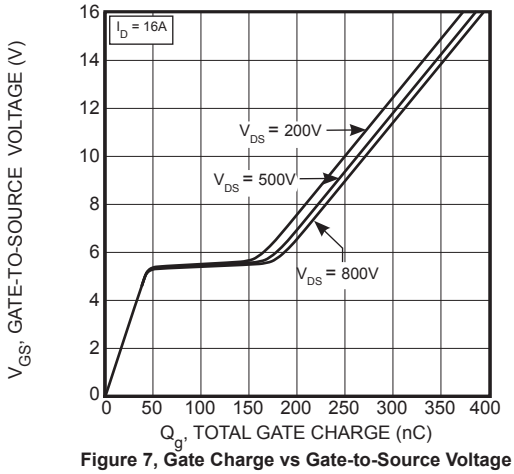

Figure 7, Gate Charge vs Gate-to-Source Voltage

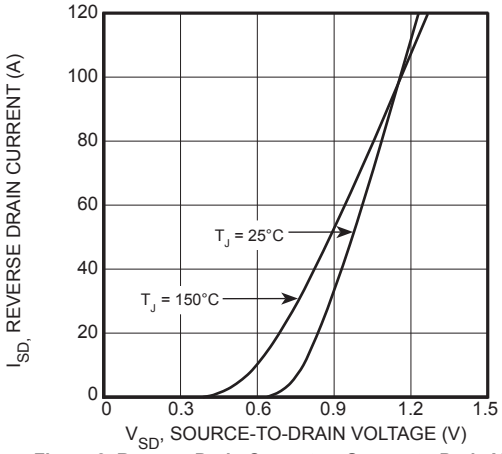

Figure 8, Reverse Drain Current vs Source-to-Drain Voltage

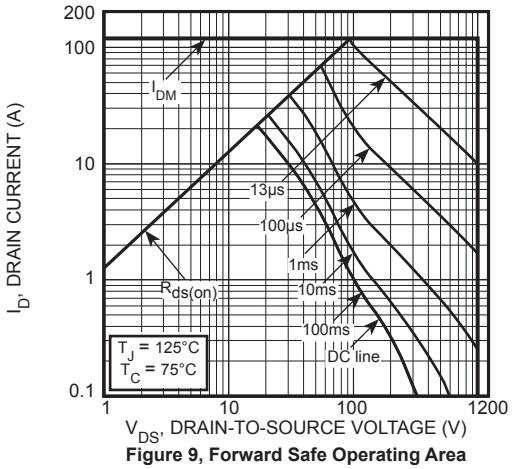

Figure 9, Forward Safe Operating Area

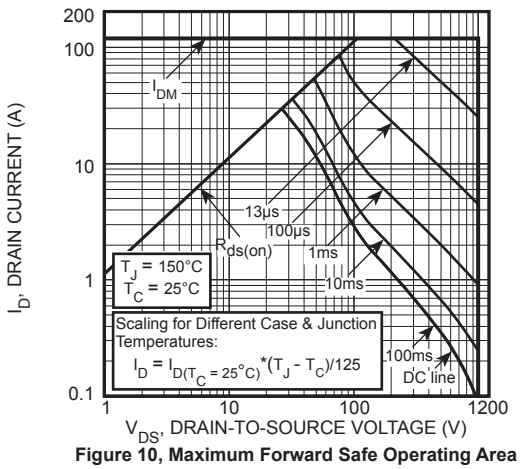

Figure 10, Maximum Forward Safe Operating Area

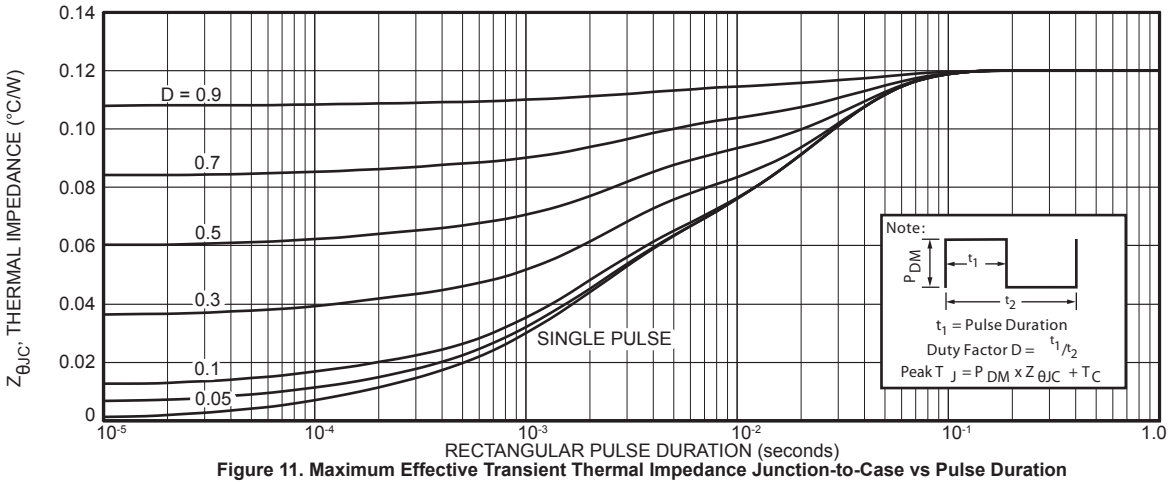

Figure 11. Maximum Effective Transient Thermal Impedance Junction-to-Case vs Pulse Duration

T-MAX™ (B2) Package Outline

e3 100% Sn Plated

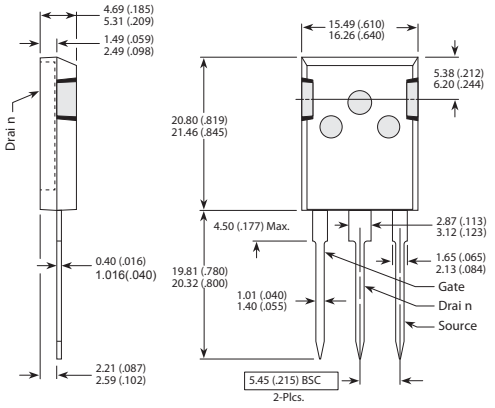

These dimensions are equal to the TO-247 without the mounting hole.

Dimensions in Millimeters (Inches)

TO-264 (L) Package Outline

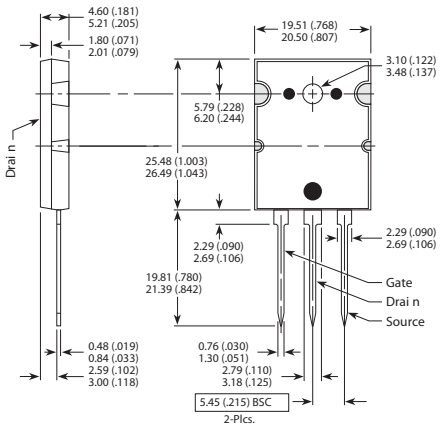

Dimensions in Millimeters (Inches)