MICROCHIP

Vectron™ Oscillators

PX-500

Crystal Oscillator

Features

- Frequency: 1 to 800 MHz
- 9x14 J-Leaded Surface Mount Package
- Surface Mount, Low Profile
- Fully RoHS Compliant *
- No Pure Tin is used in this product
- Previous Model: C1300; 042; 342
- Available as QPL MIL-PRF-55310/27, /28, or /30
- Made in USA

Applications

- Low Voltage Clock Applications
- Military Portable Radios
- Avionics and Instrumentation
- Test and Measurement Equipment
- Medical Equipment
- Navigation

* (Except parts with Sn-Pb Solder Coated Option)

Performance Specifications

Parameter	Min	Typ	Max	Units	Condition
Frequency Stabilities[1]					
vs. operating temperature range (referenced to +25°C)	-15 -25 -50 -100		+15 +25 +50 +100	ppm ppm ppm ppm	0… +70°C
	-25 -50 -100		+25 +50 +100	ppm ppm ppm	-40… +85°C
	-50 -100		+50 +100	ppm ppm	-55… +85°C
	-50 -100		+50 +100	ppm ppm	-55… +105°C
	-50 -100		+50 +100	ppm ppm	-55… +125°C
Initial tolerance	-15 -25 -50 -100		+15 +25 +50 +100	ppm ppm ppm ppm	@+25°C

Performance Specifications

Parameter	Min	Typ	Max	Units	Condition
Overall tolerance (Referenced to +25°C) (includes operating temperature and initial accuracy)	-20 -25 -50 -100		+20 +25 +50 +100	ppm ppm ppm ppm	0… +70°C
	-25 -50 -100		+25 +50 +100	ppm ppm ppm	-40… +85°C
	-50 -65 -100		+50 +65 +100	ppm ppm ppm	-55… +85°C
	-50 -65 -100		+50 +65 +100	ppm ppm ppm	-55… +105°C
	-65 -80 -100		+65 +80 +100	ppm ppm ppm	-55… +125°C
vs. supply voltage change vs. load change vs. aging / 1st year vs. aging / year (following years)	-2 -1 -3 -1		+2 +1 +3 +1	ppm ppm ppm ppm	VS ± 5% Load ± 5% after 30 days of operation
Supply Voltage (Vs)					
Supply voltage	4.75	5.0	5.25	VDC	
Supply voltage	3.135	3.3	3.465	VDC	
Supply voltage	2.375	2.5	2.625	VDC	
Current consumption * No load (+5 VDC)			15 20 40	mA mA mA	ACMOS or TTL 1.0 to 23.9 MHz ACMOS or TTL 24 to 49.9 MHz ACMOS or TTL 50 to 125.00 MHz
Current consumption * No load (+3.3 VDC or +2.5 VDC)			6 8 12 16 40 75 100	mA mA mA mA mA mA mA	ACMOS 1.0 to 14.9 MHZ ACMOS 15.0 to 39.9 MHZ ACMOS 40.0 to 49.9 MHZ ACMOS 50.0 to 84.9 MHZ ACMOS 85.0 to 125.0 MHZ LVPECL or LVDS <200 MHz LVPECL or LVDS >200 MHz

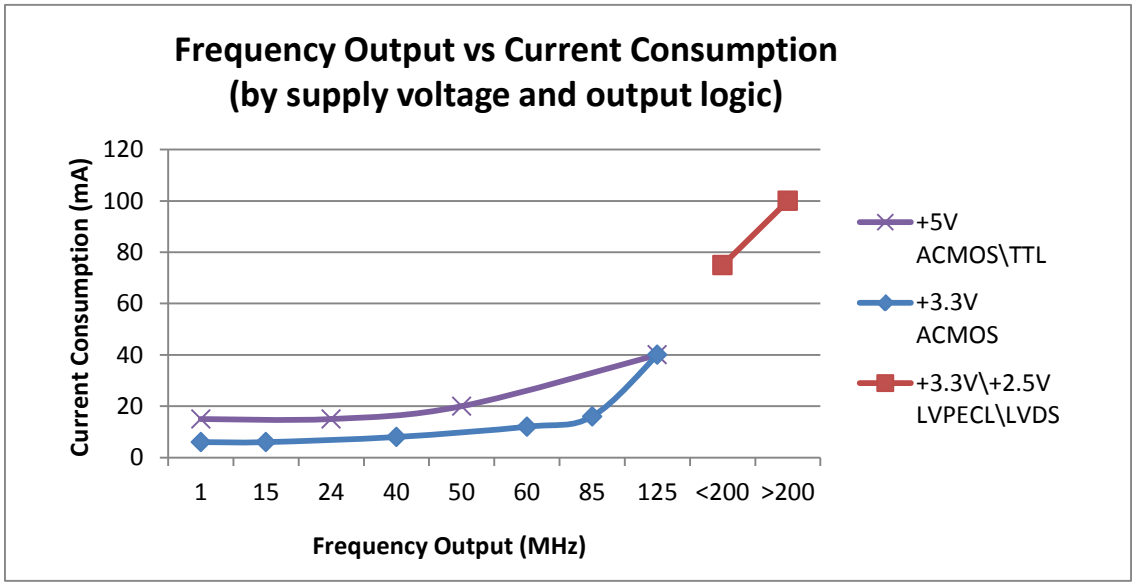

Performance Specifications

Parameter	Min	Typ	Max	Units	Condition
RF Output					
Signal		**ACMOS**			
Load		15		pF	
Signal Level (Vol)			0.5 0.3 0.25	VDC VDC VDC	with Vs=5.0V and 15pF load with Vs=3.3V and 15pF load with Vs= 2.5V and 15pF load
Signal Level (Voh)	4.5 3.0 2.25			VDC VDC VDC	with Vs=5.0V and 15pF load with Vs=3.3V and 15pF load with Vs=2.5V and 15pF load
Rise and fall times for ACMOS (measured 10% to 90%)			10 6 3	ns ns ns	1.0 to 23.9 MHz and 15pF load 24.0 to 79.9 MHz and 15pF load 80.0 to 125.0 MHz and 15pF load
Duty cycle	45 40		55 60	% %	@ 50% < 15 MHz @ 50% => 15 MHz
Signal		**TTL**			
Load			10	TTL	
Signal Level (Vol)			0.4	VDC	
Signal Level (Voh)	+2.4			VDC	
Rise and fall times for TTL (measured 0.8V to 2.0V)			5 3	ns ns	1.0 to 23.9 MHz 24.0 to 125 MHz
Duty cycle	45 40		55 60	% %	@ 1.4V < 15 MHz @ 1.4V >= 15 MHz
Signal		**LVPECL**			
Load			50	ohm	into Vcc-2V or There in Equivalent
Signal Level (Vol)			Vs -1.62	VDC	-40....+85°C operating temp
Signal Level (Voh)	Vs- 1.025			VDC	-40....+85°C operating temp
Rise and fall times for ACMOS (measured 20% to 80%)			1000 600	ps ps	< 100 MHz >= 100 MHz
Duty cycle	45		55	%	@ 50% Vdd
Jitter (rms)			10 0.5	ps ps	BW = 10Hz to 20 MHz BW = 12KHz to 20 MHz
Period Jitter (pk-pk)			40	ps	10,000 Samples - Rising edge
Signal		**LVDS**			
Load	60	100	140	ohm	Between outputs
Signal Level (Vol)		1.2		VDC	
Signal Level (Voh)		1.4		VDC	
Differential Voltage (Vod)	240	330	460	mVpeak	
Common Mode (Offset) Voltage (Vos)	1.125	1.2	1.375	V	
Start-up Time			10	ms	
Rise \ Fall Time		600	1000	ps	measured @ 20% to 80% of Vod
Duty cycle	45		55	%	@ 50% of Vod
Jitter (rms)			5 1	ps ps	BW = 10Hz to 20 MHz BW = 12KHz to 20 MHz
Period Jitter (pk-pk)			40	ps	10,000 Samples - Rising edge

Performance Specifications

Parameter	Min	Typ	Max	Units	Condition
Absolute Maximum Ratings					
Supply voltage (Vs)			7.0	V	with Vs=5.0VDC and 3.3 VDC
Operable temperature range	-55		+125	°C	
Storage temperature range	-62		+125	°C	

Additional Parameters		
Screening	Vectron Verification	
	Class B, MIL-PRF-55310	
Output Enable Hi	Logic "0" input = Outputs disabled (Tri-state) Logic "1" or floating input = Outputs enabled)	Standard CMOS, TTL and LVDS
Output Enable Lo	Logic "0" or floating input = Outputs enabled Logic "1" input = Outputs disabled (Tri-state)	Standard LVPECL
Weight	< 2 grams	

Standard Environmentals	
Vibration	MIL-STD-202, Method 204, Condition G (30 G, 10Hz-2000Hz)
Shock	MIL-STD-202, Method 213, Condition I (100 G, 6ms, Sawtooth)
Acceleration	MIL-STD-883, Method 2001, Condition A (5000 G, Y1 Plane)
Temperature Cycling	MIL-STD-883, Method 1010, Condition B
Thermal Shock	MIL-STD-202, Method 107, Condition B
Solderability	MIL-STD-202, Method 208
Leak Test (Fine and Gross)	MIL-STD-883, Method 1014, Condition A1 and C1

Standard Shipping Method

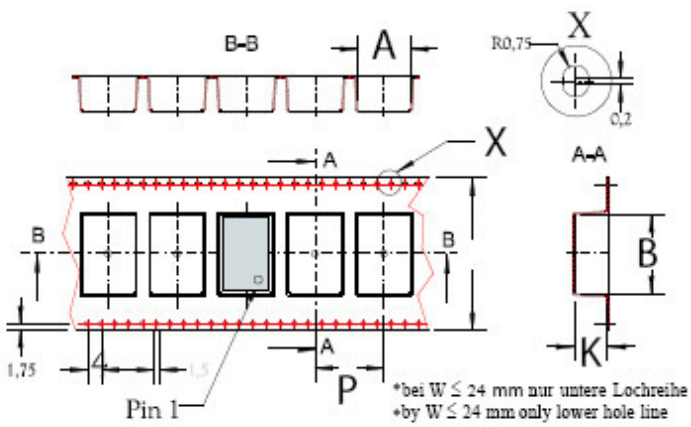

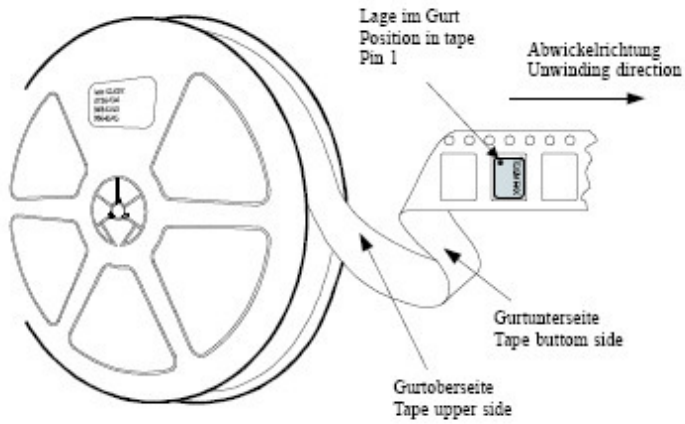

Production tolerance complying DIN IEC 286-3				
Enclosure Type	Tape width W [mm]	Quantity per meter	Quantity per reel	Dimension P
9x14 mm	24 ± 0.3	44.5	1000 max	12 ± 0.1

Phase Noise and Short Term Stability Performance (Typical)

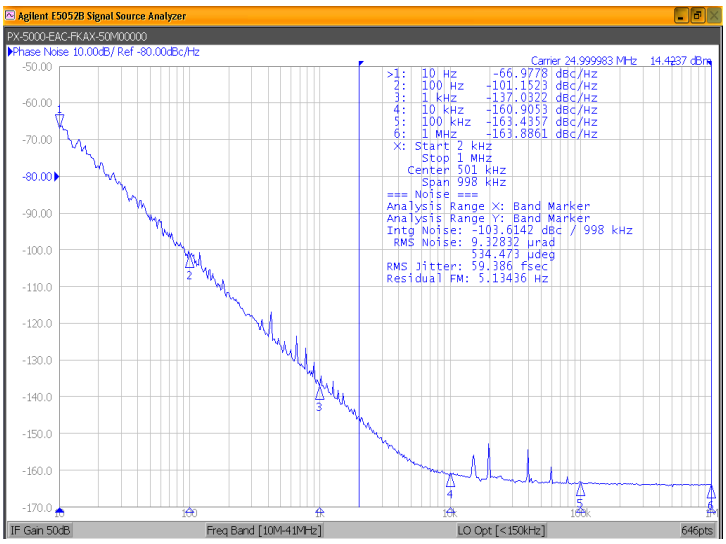

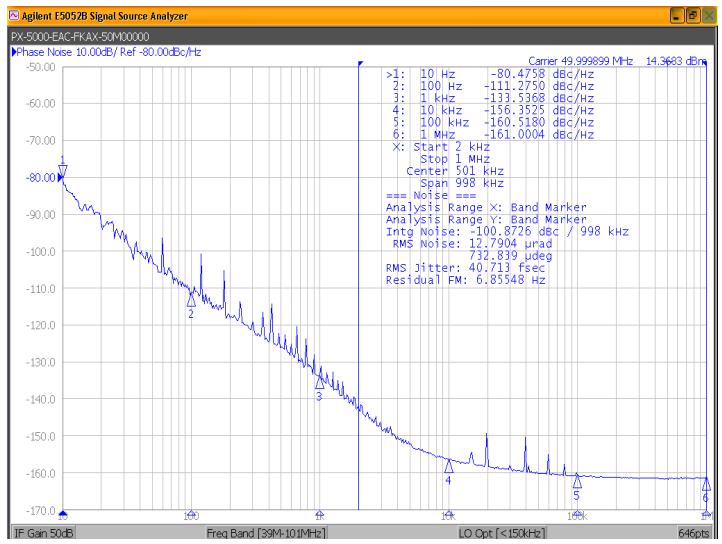

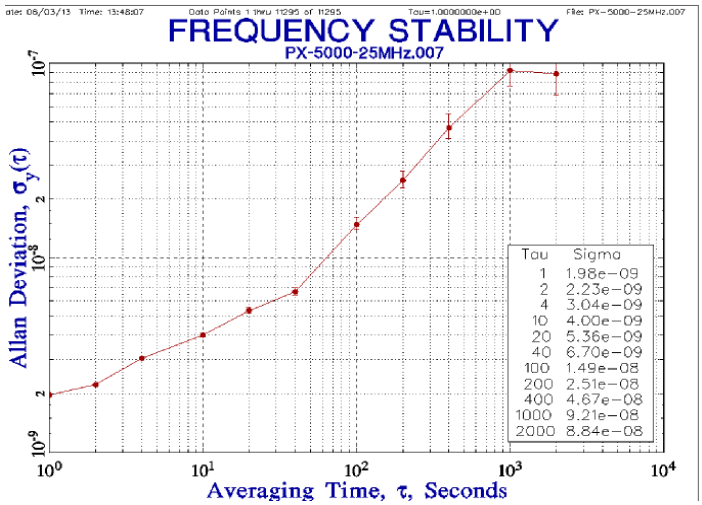

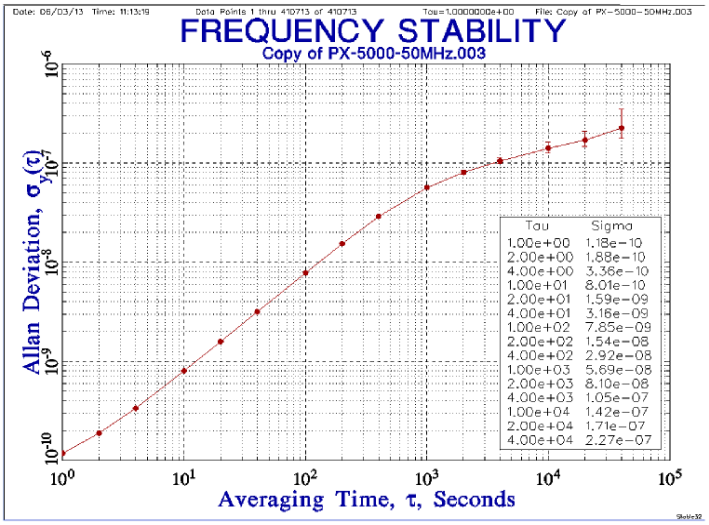

Outline Drawing / Enclosure

Type A (ACMOS or TTL)	
Code	Lead Finish
0	Gold plate 30 uin min over 80 uin min nickel
2	63/37 SnPb solder coated

Pin Connections	
1	Enable/Disable or N/C
2	Ground (Case)
3	RF Output
4	Supply Voltage

Type B (LVPECL or LVDS)	
Code	Lead Finish
1	Gold plate 30 uin min over 80 uin min nickel
3	63/37 SnPb solder coated

Pin Connections	
1	Enable/Disable or N/C
2	Enable/Disable or N/C (custom number required)
3	Ground (Case)
4	RF Output
5	Complementary Output
6	Supply Voltage

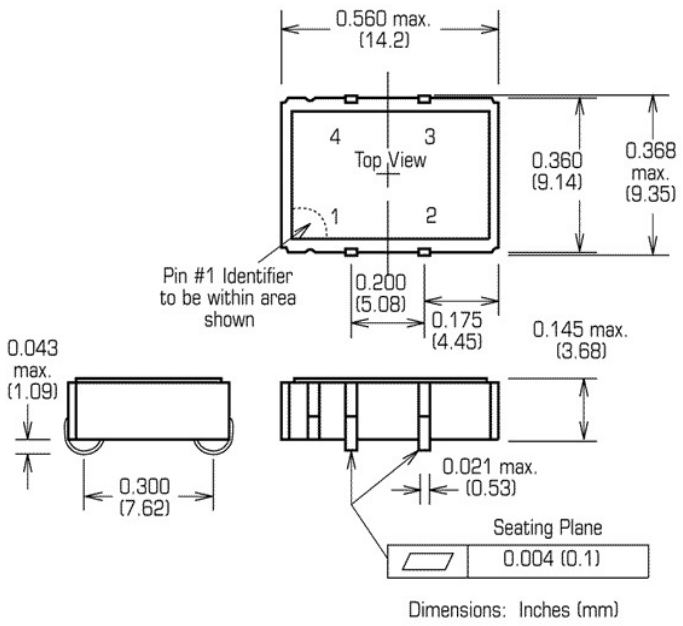

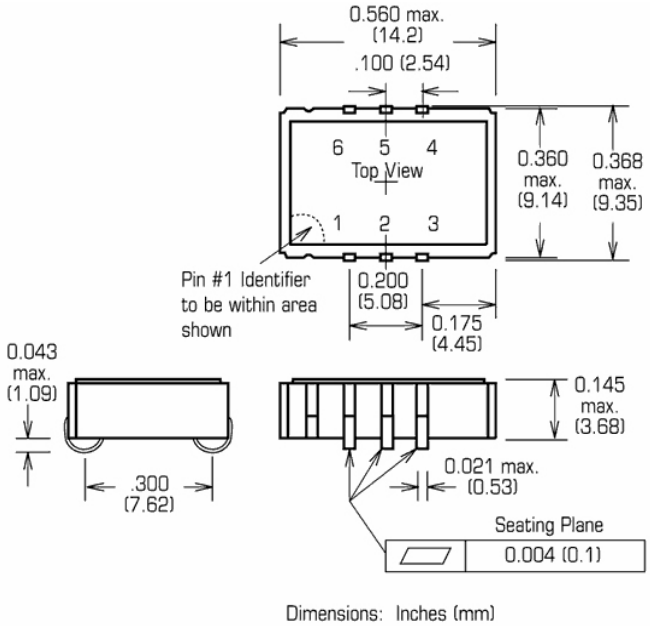

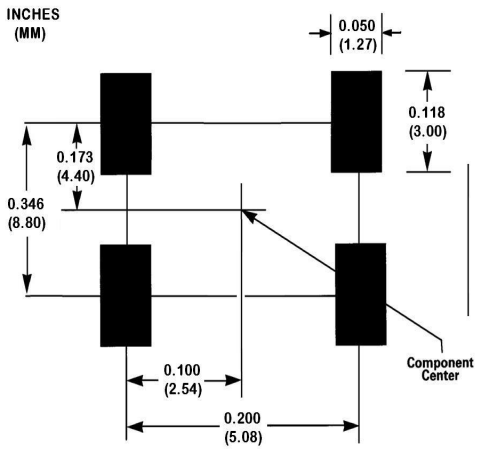

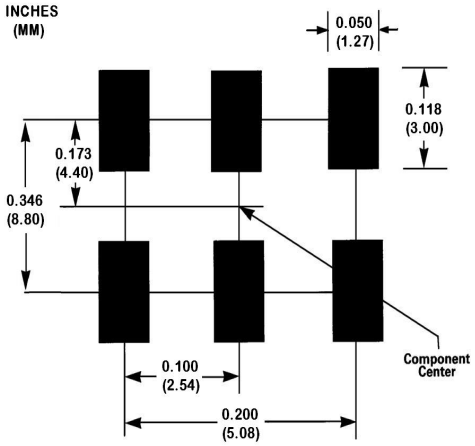

Recommended Reflow Profiles for Pb-Free & Sn-Pb

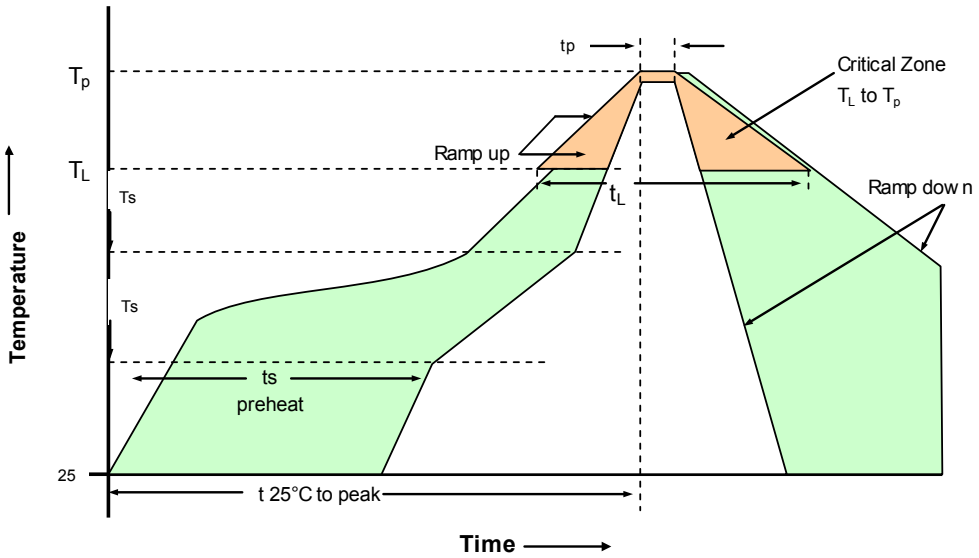

230°C Reflow Profile

Profile Feature	Sn-Pb Assembly	Profile Feature	Sn-Pb Assembly
Average ramp-up rate (TL to TP)	3°C/secod max.	Time 25°C to Peak Temperature	4 minutes max.
Preheat - Temperature min Tsmin - Temperature Min Tsmax - Time (min to max) (ts)	135°C 155°C 60-90 seconds	Time maintained above - Temperature (TL) - Time (tL)	 183°C 45-60 seconds
Tsmax to TL -Ramp-up Rate	3°C/secod max.		
Time maintained above - Temperature (TL) - Time (TL)	183°C 40-60 seconds	Time within 5°C of actual Peak Temperature (tp)	10-20 seonds max.
Peak Temperature (Tp)	max 230°C	Ramp-down Rate	6°C/second max.

Note: All temperatures refer to topside of the package, measured on the package body surface.

260°C Reflow Profile

Profile Feature	Pb-Free Assembly	Profile Feature	Pb-Free Assembly
Average ramp-up rate (TL to TP)	3°C/secod max.	Time 25°C to Peak Temperature	8 minutes max.
Preheat - Temperature min Tsmin - Temperature min Tsmax - Time (min to max) (ts)	150°C 200°C 60-180 seconds	Time maintained above - Temperature (TL) - Time (tL)	 217°C 60-150 seconds
Tsmax to TL -Ramp-up Rate	3°C/secod max.		
Time maintained above - Temperature (TL) - Time (TL)	217°C 60-150 seconds	Time within 5°C of actual Peak Temperature (tp)	20-40 seonds max.
Peak Temperature (Tp)	max 260°C	Ramp-down Rate	6°C/second max.

Note: All temperatures refer to topside of the package, measured on the package body surface.

Ordering Information

PX - 500 0 - D A T - F K X B - 10M0000000

Product Family
PX: PXO

Package
9 x 14 mm

Enclosure
0: 4 pin gold plated
1: 6 pin gold plated
2: 4 pin with solder coated leads
3: 6 pin with solder coated leads

Supply Voltage
D: 5 Vdc
E: 3.3 Vdc
H: 2.5 Vdc

RF Output Code
A: ACMOS
B: TTL
C: LVPECL
D: LVDS

Temperature Range
A: -55°C to +85°C
B: -55°C to +105°C
C: -55°C to +125°C
E: -40°C to +85°C
T: 0°C to +70°C

Accuracy Code @ 25°C or **Overall Temp Stability Code**
(Reference to **Table: II**)
D: ±15ppm
F: ±25ppm
K: ±50ppm
P: ±80ppm
S: ±100PPM
Z: ±65PPM

Temperature Stability Code
(Reference to **Table: I**)

D: ±15ppm
F: ±25ppm
K: ±50ppm
P: ±80ppm
S: ±100ppm
Z: ±65PPM
X: Use with Overall Tolerance Code

Enable Code
A: Enable Hi, Tristate
C: Enable Lo, Tristate
X: No Enable

Screening Option
B: MIL-PRF-55310 "B" Level
X: No Screening

Frequency

Available Temperature Stability Code	
Temp Range	**Temp Stability**
A: -55°C to +85°C	K: ± 50ppm
	Z ± 65ppm
B: -55°C to +105°C	P ± 80ppm
C: -55°C to +125°C	S ± 100ppm
E: -40°C to +85°C	F: ± 25ppm
	K: ± 50ppm
	Z ± 65ppm
	P ± 80ppm
	S ± 100ppm
T: 0°C to +70°C	D: ± 15ppm
	F: ± 25ppm
	K: ± 50ppm
	Z ± 65ppm
	P ± 80ppm
	S ± 100ppm

Table: I

Available Overall Tolerance Code		
Temp Range	**Overall Tolerance**	**Temp Stability**
A: -55°C to +85°C	Z: ± 65ppm	X
B: -55°C to +105°C	P: ± 80ppm	X
C: -55°C to +125°C	S: ± 100ppm	X
E: -40°C to +85°C	K: ± 50ppm	X
	Z: ± 65ppm	X
	P: ± 80ppm	X
	S: ± 100ppm	X
T: 0°C to +70°C	F: ± 25ppm	X
	K: ± 50ppm	X
	Z: ± 65ppm	X
	P: ± 80ppm	X
	S: ± 100ppm	X

Table: II

This Page Intentionally Left Blank

Notes:

1. Contact factory for improved stabilities or additional product options. Not all options and codes are available at all frequencies.
2. Unless other stated all values are valid after warm-up time and refer to typical conditions for supply voltage, frequency control voltage, load, temperature (25°C).
3. Subject to technical modification.
4. Contact factory for custom requirements.

Contact Information

USA:
100 Watts Street
Mt Holly Springs, PA 17065
Tel: 1.717.486.3411
Fax: 1.717.486.5920

Europe:
Landstrasse
74924 Neckarbischofsheim
Germany
Tel: +49 (0) 7268.801.0
Fax: +49 (0) 7268.801.281

Information contained in this publication regarding device applications and the like is provided only for your convenience and may be superseded by updates. It is your reasonability to ensure that your application meets with your specifications. MICROCHIP MAKES NO REPRESENTATION OR WARRANTIES OF ANY KIND WHETHER EXPRESS OR IMPLIED, WRITTEN OR ORAL, STATUTORY OR OTHERWISE, RELATED TO THE INFORMATION INCLUDING, BUT NOT LIMITED TO ITS CONDITION, QUALITY, PERFORMANCE, MERCHANTABILITY OR FITNESS FOR PURPOSE. Microchip disclaims all liability arising from this information and its use. Use of Microchip devices in life support and/or safety applications is entirely at the buyer's risk, and the buyer agrees to defend, indemnify and hold harmless Microchip from any and all damages, claims, suits, or expenses resulting from such use. No licenses are conveyed, implicitly, or otherwise, under any Microchip intellectual property rights unless otherwise stated.

Trademarks
The Microchip and Vectron names and logos are registered trademarks of Microchip Technology Incorporated in the U.S.A. and other countries.

Rev:03/03/26 LM