MSCSM170AM039CD3AG

Phase Leg SiC Power Module

Product Overview

The MSCSM170AM039CD3AG device is a 1700 V/523 A phase leg silicon carbide (SiC) power module.

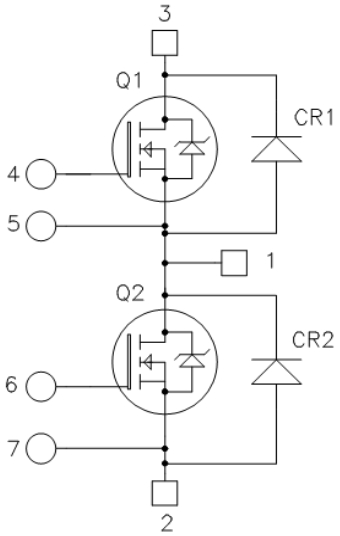

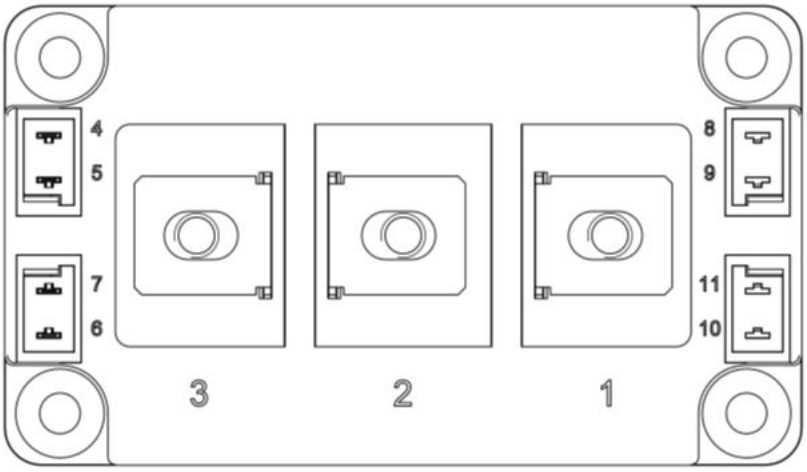

All ratings at T_J = 25 °C, unless otherwise specified.

Caution: These devices are sensitive to electrostatic discharge. Proper handling procedures must be followed.

© 2021 Microchip Technology Inc.

Features

The following are the key features of MSCSM170AM039CD3AG device:

- SiC Power MOSFET
  - Low $R_{DS(on)}$
  - High temperature performance
- SiC Schottky Diode
  - Zero reverse recovery
  - Zero forward recovery
  - Temperature Independent switching behavior
  - Positive temperature coefficient on VF
- Kelvin emitter for easy drive
- High level of integration
- M6 power connectors
- Aluminum Nitride (AlN) substrate for improved thermal performance

Benefits

The following are the benefits of MSCSM170AM039CD3AG device:

- High efficiency converter
- Stable temperature behavior
- Direct mounting to heatsink (isolated package)
- Low junction-to-case thermal resistance
- RoHS Compliant

Applications

The following are the applications of MSCSM170AM039CD3AG device:

- Welding converters
- Switched mode power supplies
- Uninterruptible power supplies
- EV motor and traction drive

© 2021 Microchip Technology Inc.

1. Electrical Specifications

The following sections show the electrical specifications of the MSCSM170AM039CD3AG device.

1.1 SiC MOSFET Characteristics (Per SiC MOSFET)

The following table lists the absolute maximum ratings (per SiC MOSFET) of the MSCSM170AM039CD3AG device.

Table 1-1. Absolute Maximum Ratings

Symbol	Parameter		Maximum Ratings	Unit
V_{DSS}	Drain-Source voltage		1700	V
I_D	Continuous drain current	T_C = 25 °C	523	A
		T_C = 80 °C	416	
I_{DM}	Pulsed drain current		1000	
V_{GS}	Gate-Source voltage		–10/23	V
$R_{DS(on)}$	Drain-Source ON resistance		5	mΩ
P_D	Power dissipation	T_C = 25 °C	2400	W

The following table lists the electrical characteristics (per SiC MOSFET) of the MSCSM170AM039CD3AG device.

Table 1-2. Electrical Characteristics

Symbol	Characteristic	Test Conditions		Min	Typ	Max	Unit
I_{DSS}	Zero gate voltage drain current	V_{GS} = 0 V; V_{DS} = 1700 V		—	90	900	µA
$R_{DS(on)}$	Drain-Source on resistance	V_{GS} = 20 V I_D = 270 A	T_J = 25 °C	—	3.9	5	mΩ
			T_J = 175 °C	—	6.8	—	
$V_{GS(th)}$	Gate threshold voltage	V_{GS} = V_{DS}; I_D = 22.5 mA		1.8	3.3	—	V
I_{GSS}	Gate-Source leakage current	V_{GS} = 20 V; V_{DS} = 0 V		—	—	900	nA

The following table lists the dynamic characteristics (per SiC MOSFET) of the MSCSM170AM039CD3AG device.

Table 1-3. Dynamic Characteristics

Symbol	Characteristic	Test Conditions		Min	Typ	Max	Unit
C_{iss}	Input capacitance	V_{GS} = 0 V		—	29.7	—	nF
C_{oss}	Output capacitance	V_{DS} = 1000 V		—	1.3	—	
C_{rss}	Reverse transfer capacitance	f = 1 MHz		—	0.09	—	
Q_g	Total gate charge	V_{GS} = –5 V/20 V		—	1602	—	nC
Q_{gs}	Gate-source charge	V_{Bus} = 850 V		—	441	—	
Q_{gd}	Gate-drain charge	I_D = 270 A		—	243	—	
$T_{d(on)}$	Turn-on delay time	V_{GS} = –5 V/20 V		—	75	—	ns
T_r	Rise time	V_{Bus} = 900 V		—	75	—	
$T_{d(off)}$	Turn-off delay time	I_D = 450 A		—	153	—	
T_f	Fall time	T_J = 150 °C R_{GON} = 3.2 Ω R_{GOFF} = 1.8 Ω			56	—	
E_{on}	Turn-on energy	V_{GS} = –5 V/20 V	T_J = 150 °C	—	20.3	—	mJ
E_{off}	Turn-off energy	V_{Bus} = 900 V I_D = 450 A R_{GON} = 3.2 Ω R_{GOFF} = 1.8 Ω	T_J = 150 °C	—	10.8	—	mJ
R_{Gint}	Internal gate resistance			—	0.65	—	Ω
R_{thJC}	Junction-to-case thermal resistance			—	—	0.063	°C/W

The following table lists the body diode ratings and characteristics (per SiC MOSFET) of the MSCSM170AM039CD3AG device.

Table 1-4. Body Diode Ratings and Characteristics

Symbol	Characteristic	Test Conditions	Min	Typ	Max	Unit
V_{SD}	Diode forward voltage	V_{GS} = 0 V; I_{SD} = 270 A	—	3.7	—	V
		V_{GS} = –5 V; I_{SD} = 270 A	—	3.9	—	
t_{rr}	Reverse recovery time	I_{SD} = 270 A	—	27	—	ns
Q_{rr}	Reverse recovery charge	V_{GS} = –5 V	—	5.9	—	µC
I_{rr}	Reverse recovery current	V_R = 900 V di_F/dt = 9000 A/µs	—	414	—	A

1.2 SiC Schottky Diode Ratings and Characteristics (Per SiC Diode)

The following table lists the SiC Schottky diode ratings and characteristics of the MSCSM170AM039CD3AG device.

Table 1-5. SiC Schottky Diode Ratings and Characteristics (Per SiC Diode)

Symbol	Characteristic	Test Conditions		Min	Typ	Max	Unit
V_{RRM}	Peak repetitive reverse voltage	—		—	—	1700	V
I_{RRM}	Reverse leakage current	V_R = 1700 V	T_J = 25 °C	—	70	1400	µA
			T_J = 175 °C	—	1050	—	
I_F	DC forward current	—	T_C = 125 °C	—	210	—	A
V_F	Diode forward voltage	I_F = 210 A	T_J = 25 °C	—	1.5	1.8	V
			T_J = 175 °C	—	2.3	—	
Q_C	Total capacitive charge	V_R = 900 V		—	1610	—	nC
C	Total capacitance	f = 1 MHz, V_R = 600 V		—	1169	—	pF
		f = 1 MHz, V_R = 900 V		—	966	—	
R_{thJC}	Junction-to-case thermal resistance			—	—	0.09	°C/W

1.3 Thermal and Package Characteristics

The following table lists the package characteristics of the MSCSM170AM039CD3AG device.

Table 1-6. Thermal and Package Characteristics

Symbol	Characteristic			Min	Max	Unit
V_{ISOL}	RMS isolation voltage, any terminal to case t = 1 min, 50 Hz/60 Hz			4000	—	V
T_J	Operating junction temperature range			–40	175	°C
T_{JOP}	Recommended junction temperature under switching conditions			–40	T_{Jmax}–25	
T_{STG}	Storage case temperature			–40	125	
T_C	Operating case temperature			–40	125	
Torque	Mounting torque	For terminals	M6	3	5	N.m
		To heatsink	M6	3	5	
Wt	Package weight			—	350	g

1.4 Typical SiC MOSFET Performance Curve

The following figures show the SiC MOSFET performance curves of the MSCSM170AM039CD3AG device.

Figure 1-1. Maximum Thermal Impedance

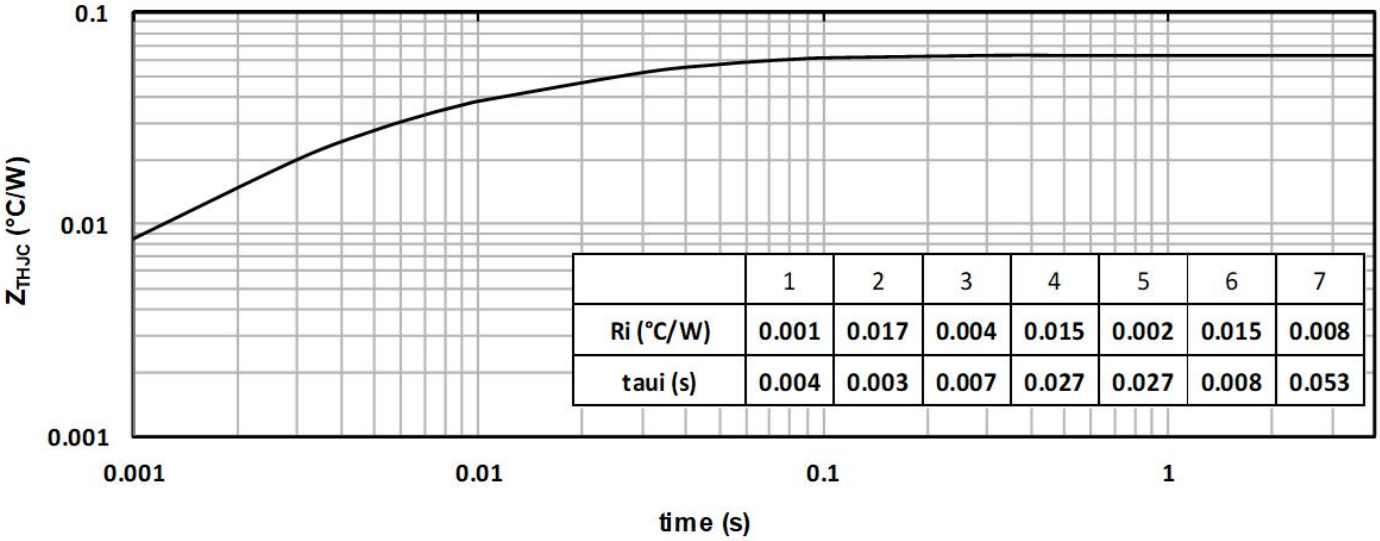

	1	2	3	4	5	6	7
Ri (°C/W)	0.001	0.017	0.004	0.015	0.002	0.015	0.008
taui (s)	0.004	0.003	0.007	0.027	0.027	0.008	0.053

Figure 1-2. Output Characteristics, T_J = 25 °C

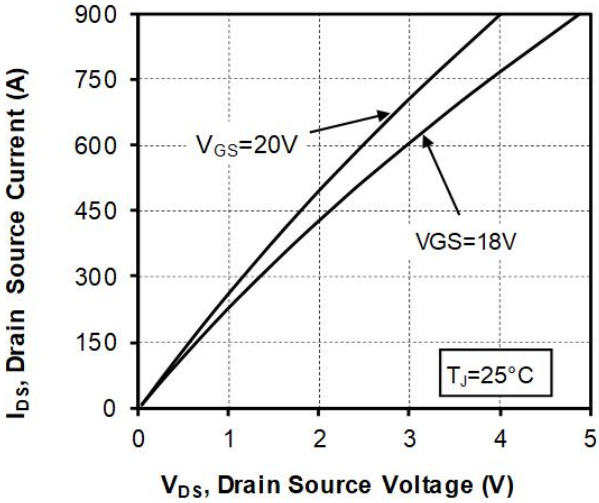

Figure 1-3. Output Characteristics, T_J = 175 °C

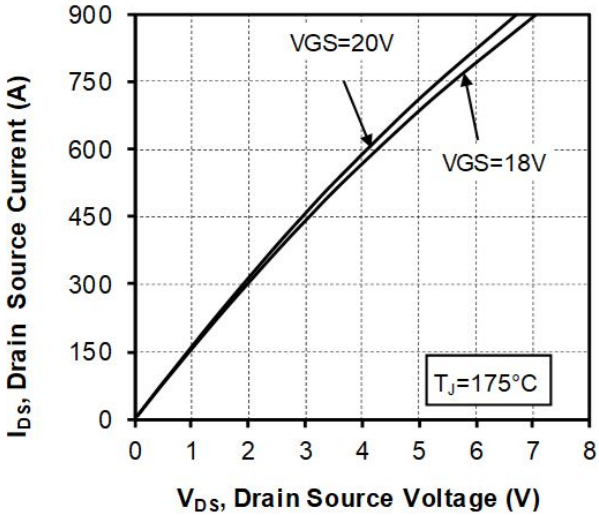

Figure 1-4. Normalized $R_{DS(on)}$ vs. Temperature

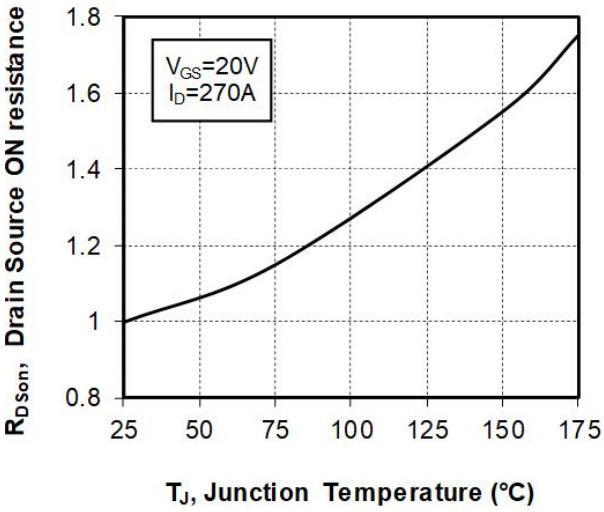

Figure 1-5. Transfer Characteristics

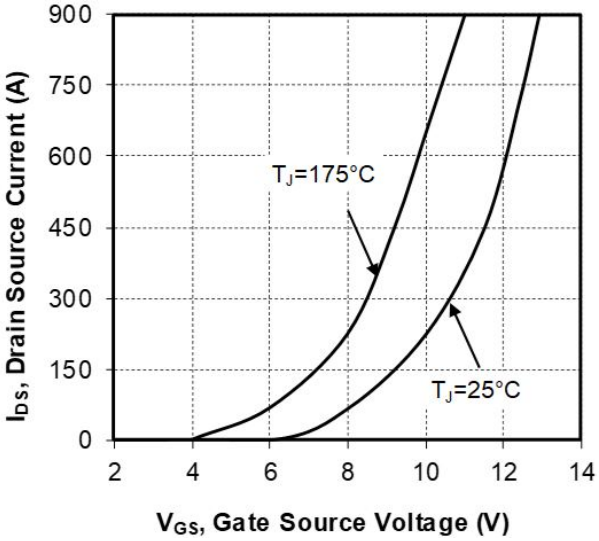

Figure 1-6. Switching Energy vs. Rg

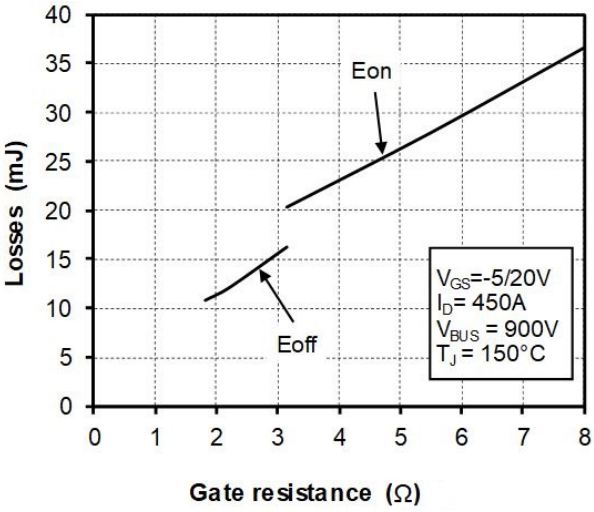

Figure 1-7. Switching Energy vs. Current

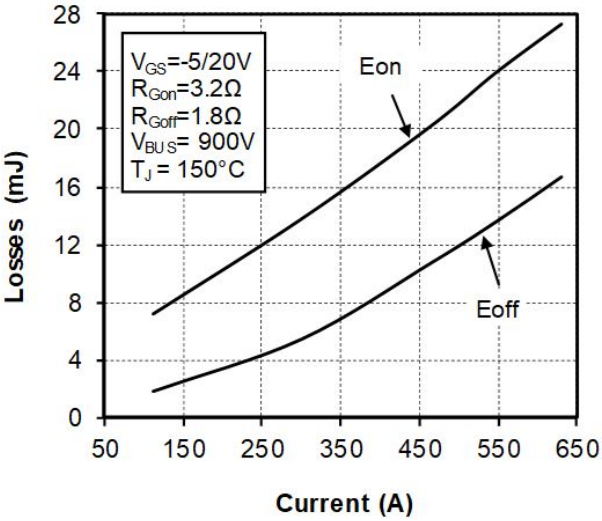

Figure 1-8. Capacitance vs. Drain Source Voltage

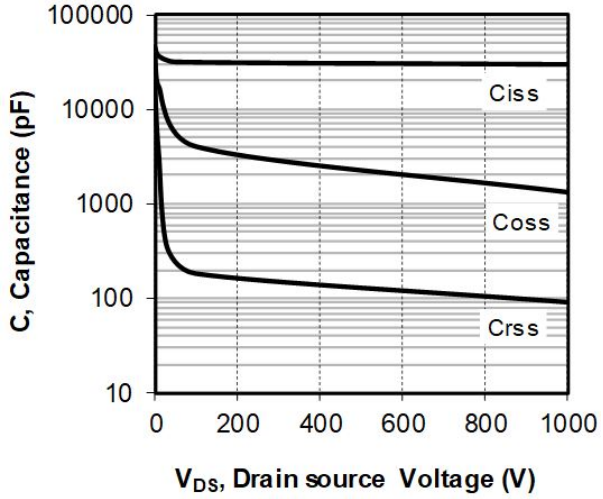

Figure 1-9. Gate Charge vs. Gate Source Voltage

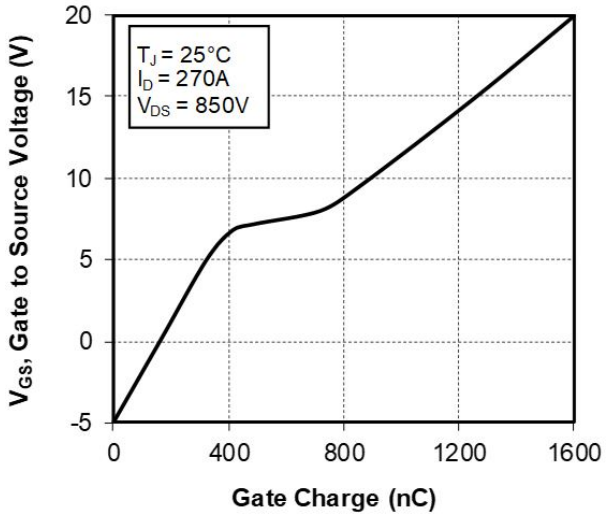

Figure 1-10. Body Diode Characteristics, T_J = 25 °C

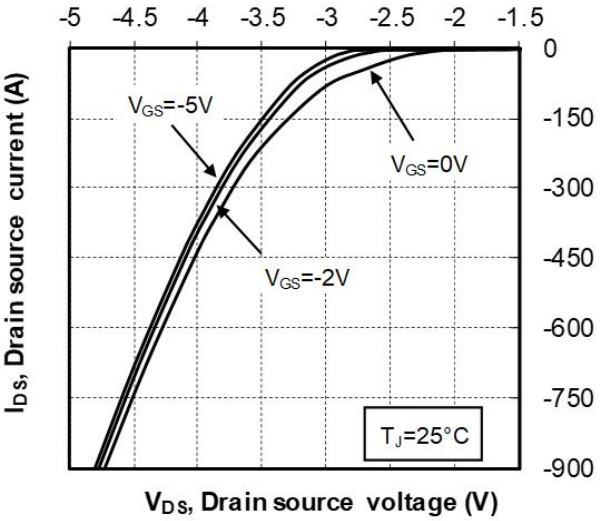

Figure 1-11. 3rd Quadrant Characteristics, T_J = 25 °C

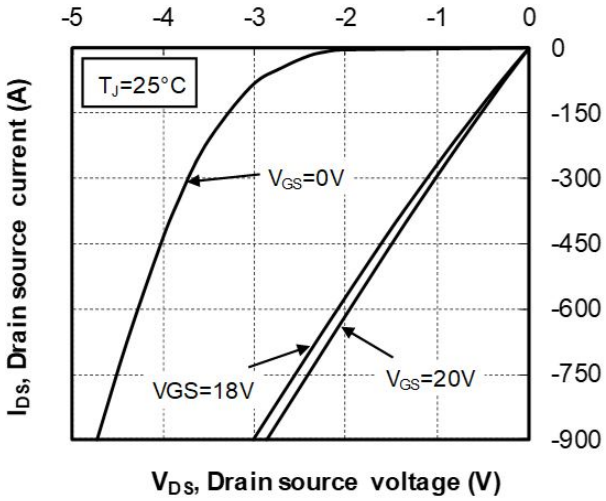

Figure 1-12. Body Diode Characteristics, T_J = 175 °C

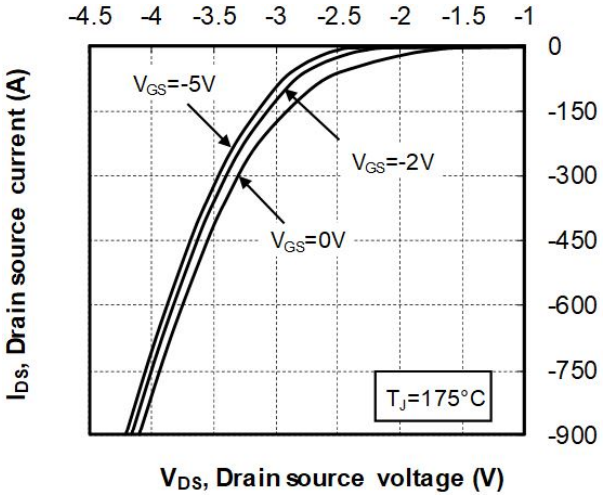

Figure 1-13. 3rd Quadrant Characteristics, T_J = 175 °C

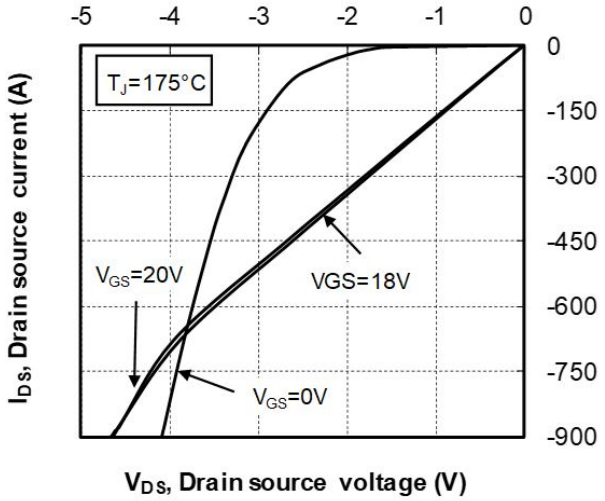

Figure 1-14. Operating Frequency vs. Drain Current

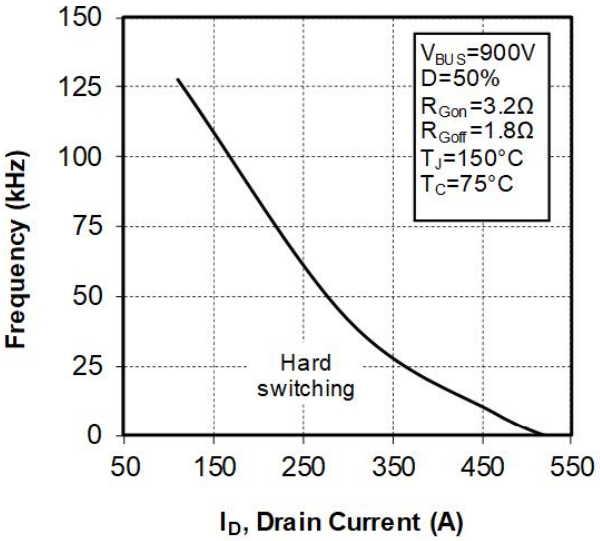

1.5 Typical SiC Diode Performance Curve

The following figures show the SiC diode performance curves of the MSCSM170AM039CD3AG device.

Figure 1-15. Maximum Thermal Impedance

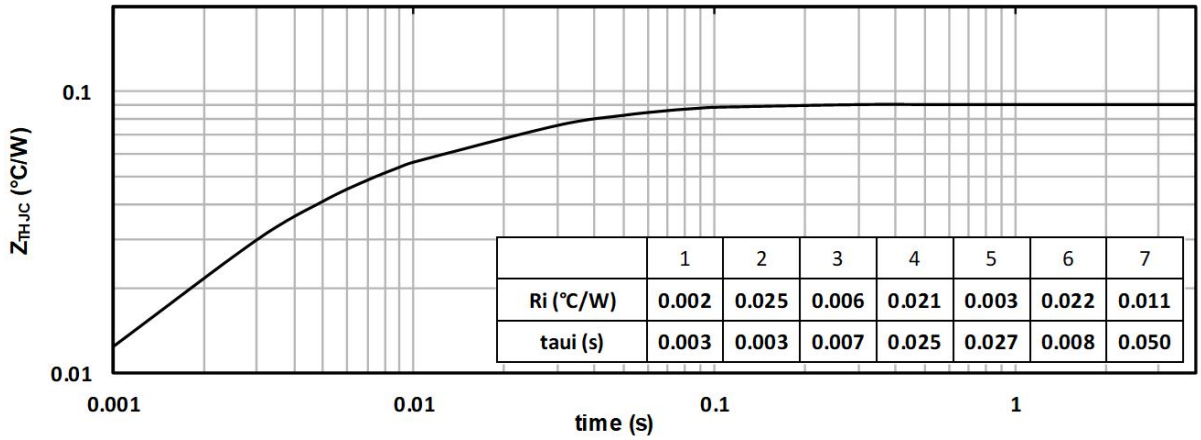

	1	2	3	4	5	6	7
Ri (°C/W)	0.002	0.025	0.006	0.021	0.003	0.022	0.011
taui (s)	0.003	0.003	0.007	0.025	0.027	0.008	0.050

Figure 1-16. Forward Characteristics

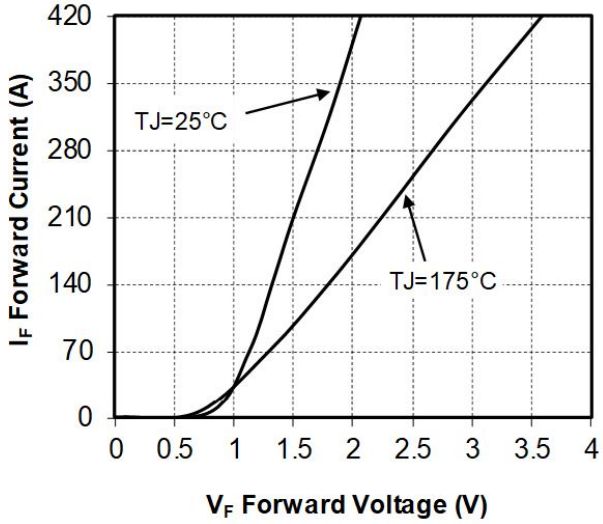

Figure 1-17. Capacitance vs. Reverse Voltage

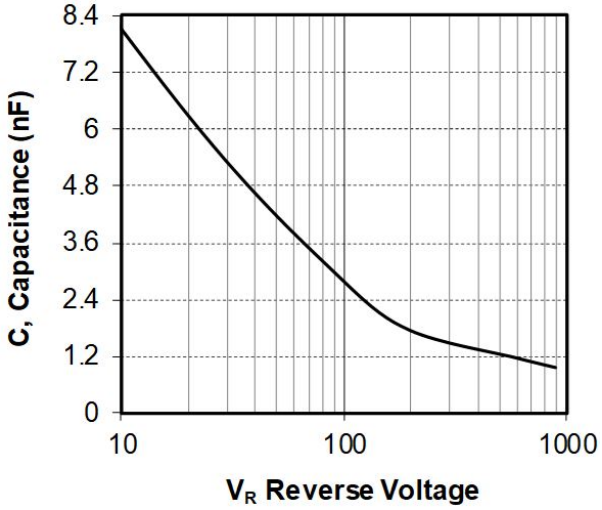

2. Package Specifications

The following section shows the package specification of the MSCSM170AM039CD3AG device.

2.1 Package Outline

The following figure shows the package outline drawing of the MSCSM170AM039CD3AG device. The dimensions in the following figure are in millimeters.

Figure 2-1. Package Outline Drawing

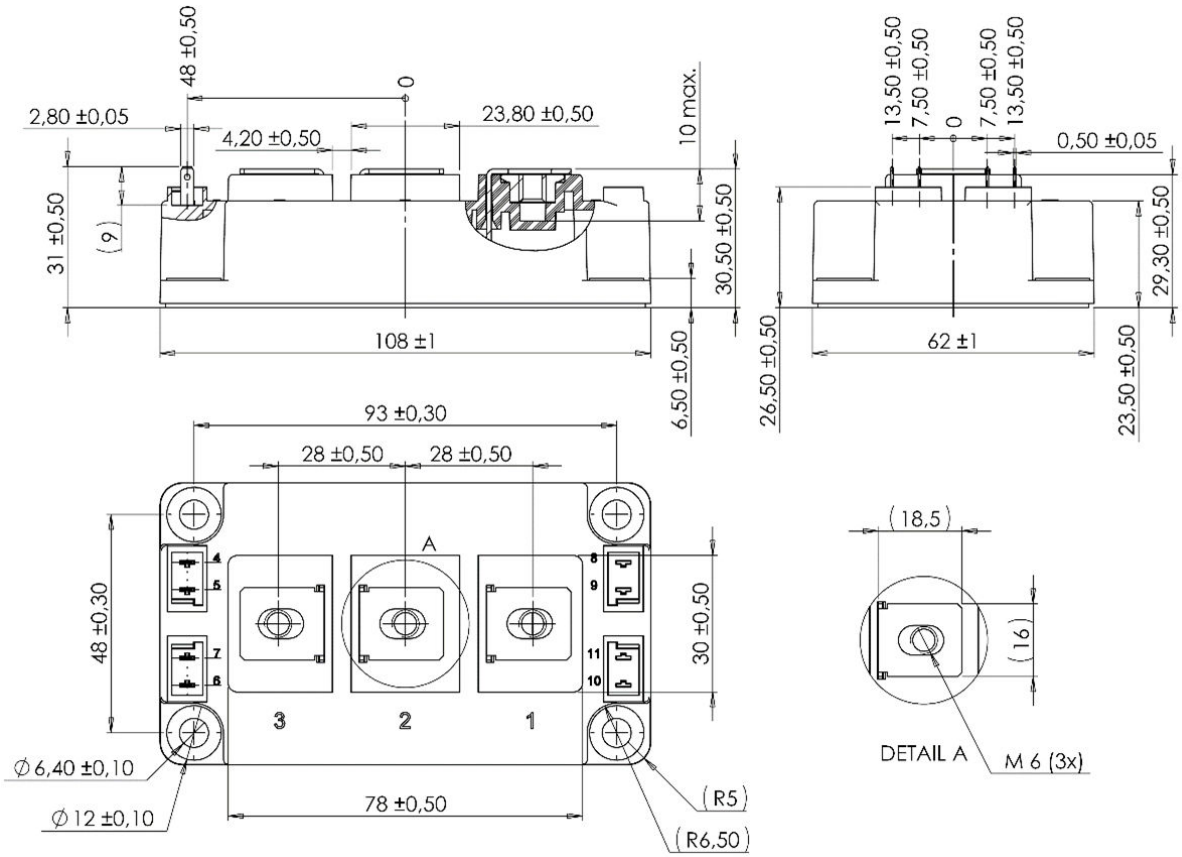

Note: See application note 1908—Mounting instructions for D3 and D4 power modules for more information.

3. Revision History

Revision	Date	Description
A	04/2021	This is the first publication of this document.

The Microchip Website

Microchip provides online support via our website at www.microchip.com/. This website is used to make files and information easily available to customers. Some of the content available includes:

- **Product Support** – Data sheets and errata, application notes and sample programs, design resources, user's guides and hardware support documents, latest software releases and archived software
- **General Technical Support** – Frequently Asked Questions (FAQs), technical support requests, online discussion groups, Microchip design partner program member listing
- **Business of Microchip** – Product selector and ordering guides, latest Microchip press releases, listing of seminars and events, listings of Microchip sales offices, distributors and factory representatives

Product Change Notification Service

Microchip's product change notification service helps keep customers current on Microchip products. Subscribers will receive email notification whenever there are changes, updates, revisions or errata related to a specified product family or development tool of interest.

To register, go to www.microchip.com/pcn and follow the registration instructions.

Customer Support

Users of Microchip products can receive assistance through several channels:

- Distributor or Representative
- Local Sales Office
- Embedded Solutions Engineer (ESE)
- Technical Support

Customers should contact their distributor, representative or ESE for support. Local sales offices are also available to help customers. A listing of sales offices and locations is included in this document.

Technical support is available through the website at: www.microchip.com/support

Microchip Devices Code Protection Feature

Note the following details of the code protection feature on Microchip devices:

- Microchip products meet the specifications contained in their particular Microchip Data Sheet.
- Microchip believes that its family of products is secure when used in the intended manner and under normal conditions.
- There are dishonest and possibly illegal methods being used in attempts to breach the code protection features of the Microchip devices. We believe that these methods require using the Microchip products in a manner outside the operating specifications contained in Microchip's Data Sheets. Attempts to breach these code protection features, most likely, cannot be accomplished without violating Microchip's intellectual property rights.
- Microchip is willing to work with any customer who is concerned about the integrity of its code.
- Neither Microchip nor any other semiconductor manufacturer can guarantee the security of its code. Code protection does not mean that we are guaranteeing the product is "unbreakable." Code protection is constantly evolving. We at Microchip are committed to continuously improving the code protection features of our products. Attempts to break Microchip's code protection feature may be a violation of the Digital Millennium Copyright Act. If such acts allow unauthorized access to your software or other copyrighted work, you may have a right to sue for relief under that Act.

Legal Notice

Information contained in this publication is provided for the sole purpose of designing with and using Microchip products. Information regarding device applications and the like is provided only for your convenience and may be superseded by updates. It is your responsibility to ensure that your application meets with your specifications.

THIS INFORMATION IS PROVIDED BY MICROCHIP “AS IS”. MICROCHIP MAKES NO REPRESENTATIONS OR WARRANTIES OF ANY KIND WHETHER EXPRESS OR IMPLIED, WRITTEN OR ORAL, STATUTORY OR OTHERWISE, RELATED TO THE INFORMATION INCLUDING BUT NOT LIMITED TO ANY IMPLIED WARRANTIES OF NON-INFRINGEMENT, MERCHANTABILITY, AND FITNESS FOR A PARTICULAR PURPOSE OR WARRANTIES RELATED TO ITS CONDITION, QUALITY, OR PERFORMANCE.

IN NO EVENT WILL MICROCHIP BE LIABLE FOR ANY INDIRECT, SPECIAL, PUNITIVE, INCIDENTAL OR CONSEQUENTIAL LOSS, DAMAGE, COST OR EXPENSE OF ANY KIND WHATSOEVER RELATED TO THE INFORMATION OR ITS USE, HOWEVER CAUSED, EVEN IF MICROCHIP HAS BEEN ADVISED OF THE POSSIBILITY OR THE DAMAGES ARE FORESEEABLE. TO THE FULLEST EXTENT ALLOWED BY LAW, MICROCHIP'S TOTAL LIABILITY ON ALL CLAIMS IN ANY WAY RELATED TO THE INFORMATION OR ITS USE WILL NOT EXCEED THE AMOUNT OF FEES, IF ANY, THAT YOU HAVE PAID DIRECTLY TO MICROCHIP FOR THE INFORMATION. Use of Microchip devices in life support and/or safety applications is entirely at the buyer’s risk, and the buyer agrees to defend, indemnify and hold harmless Microchip from any and all damages, claims, suits, or expenses resulting from such use. No licenses are conveyed, implicitly or otherwise, under any Microchip intellectual property rights unless otherwise stated.

Trademarks

The Microchip name and logo, the Microchip logo, Adaptec, AnyRate, AVR, AVR logo, AVR Freaks, BesTime, BitCloud, chipKIT, chipKIT logo, CryptoMemory, CryptoRF, dsPIC, FlashFlex, flexPWR, HELDO, IGLOO, JukeBlox, KeeLoq, Kleer, LANCheck, LinkMD, maXStylus, maXTouch, MediaLB, megaAVR, Microsemi, Microsemi logo, MOST, MOST logo, MPLAB, OptoLyzer, PackeTime, PIC, picoPower, PICSTART, PIC32 logo, PolarFire, Prochip Designer, QTouch, SAM-BA, SenGenuity, SpyNIC, SST, SST Logo, SuperFlash, Symmetricom, SyncServer, Tachyon, TimeSource, tinyAVR, UNI/O, Vectron, and XMEGA are registered trademarks of Microchip Technology Incorporated in the U.S.A. and other countries.

AgileSwitch, APT, ClockWorks, The Embedded Control Solutions Company, EtherSynch, FlashTec, Hyper Speed Control, HyperLight Load, IntelliMOS, Libero, motorBench, mTouch, Powermite 3, Precision Edge, ProASIC, ProASIC Plus, ProASIC Plus logo, Quiet-Wire, SmartFusion, SyncWorld, Temux, TimeCesium, TimeHub, TimePictra, TimeProvider, WinPath, and ZL are registered trademarks of Microchip Technology Incorporated in the U.S.A.

Adjacent Key Suppression, AKS, Analog-for-the-Digital Age, Any Capacitor, AnyIn, AnyOut, Augmented Switching, BlueSky, BodyCom, CodeGuard, CryptoAuthentication, CryptoAutomotive, CryptoCompanion, CryptoController, dsPICDEM, dsPICDEM.net, Dynamic Average Matching, DAM, ECAN, Espresso T1S, EtherGREEN, IdealBridge, In-Circuit Serial Programming, ICSP, INICnet, Intelligent Paralleling, Inter-Chip Connectivity, JitterBlocker, maxCrypto, maxView, memBrain, Mindi, MiWi, MPASM, MPF, MPLAB Certified logo, MPLIB, MPLINK, MultiTRAK, NetDetach, Omniscient Code Generation, PICDEM, PICDEM.net, PICkit, PICtail, PowerSmart, PureSilicon, QMatrix, REAL ICE, Ripple Blocker, RTAX, RTG4, SAM-ICE, Serial Quad I/O, simpleMAP, SimpliPHY, SmartBuffer, SMART-I.S., storClad, SQI, SuperSwitcher, SuperSwitcher II, Switchtec, SynchroPHY, Total Endurance, TSHARC, USBCheck, VariSense, VectorBlox, VeriPHY, ViewSpan, WiperLock, XpressConnect, and ZENA are trademarks of Microchip Technology Incorporated in the U.S.A. and other countries.

SQTP is a service mark of Microchip Technology Incorporated in the U.S.A.

The Adaptec logo, Frequency on Demand, Silicon Storage Technology, and Symmcom are registered trademarks of Microchip Technology Inc. in other countries.

GestIC is a registered trademark of Microchip Technology Germany II GmbH & Co. KG, a subsidiary of Microchip Technology Inc., in other countries.

All other trademarks mentioned herein are property of their respective companies.

© 2021, Microchip Technology Incorporated, Printed in the U.S.A., All Rights Reserved.

ISBN: 978-1-5224-8097-6

Quality Management System

For information regarding Microchip's Quality Management Systems, please visit www.microchip.com/quality.

Worldwide Sales and Service

AMERICAS	ASIA/PACIFIC	ASIA/PACIFIC	EUROPE
Corporate Office 2355 West Chandler Blvd. Chandler, AZ 85224-6199 Tel: 480-792-7200 Fax: 480-792-7277 Technical Support: www.microchip.com/support Web Address: www.microchip.com **Atlanta** Duluth, GA Tel: 678-957-9614 Fax: 678-957-1455 **Austin, TX** Tel: 512-257-3370 **Boston** Westborough, MA Tel: 774-760-0087 Fax: 774-760-0088 **Chicago** Itasca, IL Tel: 630-285-0071 Fax: 630-285-0075 **Dallas** Addison, TX Tel: 972-818-7423 Fax: 972-818-2924 **Detroit** Novi, MI Tel: 248-848-4000 **Houston, TX** Tel: 281-894-5983 **Indianapolis** Noblesville, IN Tel: 317-773-8323 Fax: 317-773-5453 Tel: 317-536-2380 **Los Angeles** Mission Viejo, CA Tel: 949-462-9523 Fax: 949-462-9608 Tel: 951-273-7800 **Raleigh, NC** Tel: 919-844-7510 **New York, NY** Tel: 631-435-6000 **San Jose, CA** Tel: 408-735-9110 Tel: 408-436-4270 **Canada - Toronto** Tel: 905-695-1980 Fax: 905-695-2078	**Australia - Sydney** Tel: 61-2-9868-6733 **China - Beijing** Tel: 86-10-8569-7000 **China - Chengdu** Tel: 86-28-8665-5511 **China - Chongqing** Tel: 86-23-8980-9588 **China - Dongguan** Tel: 86-769-8702-9880 **China - Guangzhou** Tel: 86-20-8755-8029 **China - Hangzhou** Tel: 86-571-8792-8115 **China - Hong Kong SAR** Tel: 852-2943-5100 **China - Nanjing** Tel: 86-25-8473-2460 **China - Qingdao** Tel: 86-532-8502-7355 **China - Shanghai** Tel: 86-21-3326-8000 **China - Shenyang** Tel: 86-24-2334-2829 **China - Shenzhen** Tel: 86-755-8864-2200 **China - Suzhou** Tel: 86-186-6233-1526 **China - Wuhan** Tel: 86-27-5980-5300 **China - Xian** Tel: 86-29-8833-7252 **China - Xiamen** Tel: 86-592-2388138 **China - Zhuhai** Tel: 86-756-3210040	**India - Bangalore** Tel: 91-80-3090-4444 **India - New Delhi** Tel: 91-11-4160-8631 **India - Pune** Tel: 91-20-4121-0141 **Japan - Osaka** Tel: 81-6-6152-7160 **Japan - Tokyo** Tel: 81-3-6880- 3770 **Korea - Daegu** Tel: 82-53-744-4301 **Korea - Seoul** Tel: 82-2-554-7200 **Malaysia - Kuala Lumpur** Tel: 60-3-7651-7906 **Malaysia - Penang** Tel: 60-4-227-8870 **Philippines - Manila** Tel: 63-2-634-9065 **Singapore** Tel: 65-6334-8870 **Taiwan - Hsin Chu** Tel: 886-3-577-8366 **Taiwan - Kaohsiung** Tel: 886-7-213-7830 **Taiwan - Taipei** Tel: 886-2-2508-8600 **Thailand - Bangkok** Tel: 66-2-694-1351 **Vietnam - Ho Chi Minh** Tel: 84-28-5448-2100	**Austria - Wels** Tel: 43-7242-2244-39 Fax: 43-7242-2244-393 **Denmark - Copenhagen** Tel: 45-4485-5910 Fax: 45-4485-2829 **Finland - Espoo** Tel: 358-9-4520-820 **France - Paris** Tel: 33-1-69-53-63-20 Fax: 33-1-69-30-90-79 **Germany - Garching** Tel: 49-8931-9700 **Germany - Haan** Tel: 49-2129-3766400 **Germany - Heilbronn** Tel: 49-7131-72400 **Germany - Karlsruhe** Tel: 49-721-625370 **Germany - Munich** Tel: 49-89-627-144-0 Fax: 49-89-627-144-44 **Germany - Rosenheim** Tel: 49-8031-354-560 **Israel - Ra'anana** Tel: 972-9-744-7705 **Italy - Milan** Tel: 39-0331-742611 Fax: 39-0331-466781 **Italy - Padova** Tel: 39-049-7625286 **Netherlands - Drunen** Tel: 31-416-690399 Fax: 31-416-690340 **Norway - Trondheim** Tel: 47-72884388 **Poland - Warsaw** Tel: 48-22-3325737 **Romania - Bucharest** Tel: 40-21-407-87-50 **Spain - Madrid** Tel: 34-91-708-08-90 Fax: 34-91-708-08-91 **Sweden - Gothenberg** Tel: 46-31-704-60-40 **Sweden - Stockholm** Tel: 46-8-5090-4654 **UK - Wokingham** Tel: 44-118-921-5800 Fax: 44-118-921-5820