USB4716

USB 2.0 Hi-Speed 5-Port Hub Controller

Highlights

- 5-Port USB 2.0 Hi-Speed hub controller ideal for Thunderbolt Applications
  - 2 mode options available:
    1x5 mode (Host Swapping) - 1 upstream port, 5 downstream ports;
    2x4 mode (Host Sharing) - 2 upstream ports*, 4 downstream ports. *Only 1 upstream port active at a time
- USB Battery Charging, revision 1.2, support on downstream ports (DCP, CDP, SDP)
- Battery charging support for China and Apple® profiles
- USB to SMBus, SPI, and GPIO
  - Apple authentication support

Target Applications

- Thunderbolt Docks and Monitors
- Media hubs
- Infotainment head units
- Point of sale
- Host switch for diagnostic mode
- Host switch for field firmware upgrades

Product Features

- **FlexConnect**
  - Downstream port able to swap with upstream port, allowing USB host capable devices to control other devices on the hub
- **MultiTRAK™**
  - Dedicated Transaction Translator per port
- **PortMap**
  - Configurable port mapping and disable sequencing
- **PortSwap**
  - Configurable differential intra-pair signal swapping
- **PHYBoost**
  - Programmable USB transceiver drive strength for recovering signal integrity
- **VariSense™**
  - Programmable USB receiver sensitivity
- USB Link Power Management (LPM) support
- Vendor Specific Messaging (VSM) support
- Enhanced OEM configuration options available through external straps, OTP configuration or SMBus Slave port
- 3.3 V supply voltage
- Packaging
  - 56-pin VQFN (7 x 7 mm)
- Environmental
  - Commercial temperature range (0°C to +70°C)
  - Industrial temperature range (-40° to +85°C)

© 2024 Microchip Technology Inc. and its subsidiaries

TO OUR VALUED CUSTOMERS

It is our intention to provide our valued customers with the best documentation possible to ensure successful use of your Microchip products. To this end, we will continue to improve our publications to better suit your needs. Our publications will be refined and enhanced as new volumes and updates are introduced.

If you have any questions or comments regarding this publication, please contact the Marketing Communications Department via E-mail at **docerrors@microchip.com**. We welcome your feedback.

Most Current Data Sheet

To obtain the most up-to-date version of this data sheet, please register at our Worldwide Web site at:

http://www.microchip.com

You can determine the version of a data sheet by examining its literature number found on the bottom outside corner of any page. The last character of the literature number is the version number, (e.g., DS30000000A is version A of document DS30000000).

Errata

An errata sheet, describing minor operational differences from the data sheet and recommended workarounds, may exist for current devices. As device/documentation issues become known to us, we will publish an errata sheet. The errata will specify the revision of silicon and revision of document to which it applies.

To determine if an errata sheet exists for a particular device, please check with one of the following:

- Microchip's Worldwide Web site; http://www.microchip.com
- Your local Microchip sales office (see last page)

When contacting a sales office, please specify which device, revision of silicon and data sheet (include -literature number) you are using.

Customer Notification System

Register on our web site at **www.microchip.com** to receive the most current information on all of our products.

© 2024 Microchip Technology Inc. and its subsidiaries

1.0 PREFACE

1.1 General Terms

TABLE 1-1: GENERAL TERMS

Term	Description
ADC	Analog-to-Digital Converter
Byte	8 bits
CDC	Communication Device Class
EOP	End of Packet
EP	Endpoint
FIFO	First In First Out buffer
FS	Full-Speed
GPIO	General Purpose I/O
HS	Hi-Speed
Hub Feature Controller	The Hub Feature Controller, sometimes called a Hub Controller for short is the internal processor used to enable the unique features of the USB Controller Hub. This is not to be confused with the USB Hub Controller that is used to communicate the hub status back to the Host during a USB session.
I^2C	Inter-Integrated Circuit
LS	Low-Speed
lsb	Least Significant Bit
LSB	Least Significant Byte
msb	Most Significant Bit
MSB	Most Significant Byte
N/A	Not Applicable
NC	No Connect
OTP	One Time Programmable
PCB	Printed Circuit Board
PHY	Physical Layer
PLL	Phase Lock Loop
RESERVED	Refers to a reserved bit field or address. Unless otherwise noted, reserved bits must always be zero for write operations. Unless otherwise noted, values are not guaranteed when reading reserved bits. Unless otherwise noted, do not read or write to reserved addresses.
SDK	Software Development Kit
SMBus	System Management Bus
UUID	Universally Unique IDentifier
WORD	16 bits

© 2024 Microchip Technology Inc. and its subsidiaries

1.2 Buffer Types

TABLE 1-2: BUFFER TYPE DESCRIPTIONS

Buffer	Description
I	Input.
IS	Input with Schmitt trigger.
O4	Output buffer with 4mA sink and 4mA source.
O12	Output buffer with 12mA sink and 12mA source.
OD12	Open-drain output with 12mA sink.
PU	Internal pull-up. Unless otherwise noted in the pin description, internal pull-ups are always enabled. Internal pull-up resistors prevent unconnected inputs from floating. Do not rely on internal resistors to drive signals external to the device. When connected to a load that must be pulled high, an external resistor must be added.
PD	Internal pull-down. Unless otherwise noted in the pin description, internal pull-downs are always enabled. Internal pull-down resistors prevent unconnected inputs from floating. Do not rely on internal resistors to drive signals external to the device. When connected to a load that must be pulled low, an external resistor must be added.
ICLK	Crystal oscillator input pin.
OCLK	Crystal oscillator output pin.
I/O-U	Analog input/output defined in USB specification.
I-R	RBIAS.
A	Analog.
P	Power pin.

1.3 Pin Reset States

The pin reset state definitions are detailed in Table 1-3. Refer to Section 3.0, "Pin Descriptions and Configuration" for details on individual pin reset states.

TABLE 1-3: PIN RESET STATE LEGEND

Symbol	Description
A/P	Analog/Power Input
Z	Hardware disables output driver (high impedance)
PD-15k	Hardware enables internal 15kΩ pull-down
PD-67k	Hardware enables internal 67kΩ pull-down
PU-67k	Hardware enables internal 67kΩ pull-up
USB	USB line

© 2024 Microchip Technology Inc. and its subsidiaries

1.4 Reference Documents

1. *Universal Serial Bus Revision 2.0 Specification*, http://www.usb.org
2. AN2341 - USB4715 FlexConnect Operation, http://www.microchip.com
3. *AN2439 - Configuration of the USB491x/USB492x/USB4715*, http://www.microchip.com
4. *AN2437 - USB to GPIO Bridging with USB4715 and USB49xx*, http://www.microchip.com
5. *AN2438 - USB to I^2C Bridging with USB4715 and USB49xx*, http://www.microchip.com
6. *AN2430 - USB to SPI Bridging with USB4715 and USB49xx*, http://www.microchip.com
7. *AN2426 - USB to UART Bridging with Microchip USB4715, USB4916, and USB4927*, http://www.microchip.com
8. *Battery Charging Specification*, Revision 1.2, Dec. 07, 2010, http://www.usb.org
9. *I^2C-Bus Specification*, Version 1.1, http://www.nxp.com/documents/user_manual/UM10204.pdf
10. *I^2S-Bus Specification*, http://www.nxp.com/acrobat_download/various/I2SBUS.pdf
11. *System Management Bus Specification*, Version 1.0, http://smbus.org/specs

© 2024 Microchip Technology Inc. and its subsidiaries

2.0 INTRODUCTION

2.1 General Description

The Microchip USB4716 USB 2.0 Hi-Speed hub controller is a single-chip device targeted for industrial and commercial applications. Primary functions of the device include: multiple downstream USB ports supporting USB 2.0 Low Speed/ Full Speed/Hi-Speed, single USB 2.0 Hi-Speed upstream connection to a USB host / OTG port, battery charging support for BC1.2, Apple and China charging profiles, USB I/O bridging, and an on-chip microcontroller.

The USB4716 employs unique FlexConnect USB functionality, whereby one of the downstream ports can be reconfigured to become an upstream port, allowing the host or master capability to be switched to equipment on the other ports. This port/host becomes the master of the new USB bus, while the other ports can connect as USB devices, or become dedicated charging ports.

For FlexConnect applications, the USB4716 implements dual mode functionality between port 0 and port 1. 1x5 mode (host swapping) enables the hub to operate in a traditional 5-port hub with a configuration of 1 upstream port and 5 downstream ports. 2x4 mode (host sharing) enables the hub to support 2 possible upstream host ports sharing access to the 4 remaining downstream ports. Only 1 upstream port can be active at a time. 2x4 mode is most commonly seen in Thunderbolt applications. The USB4716 is available in commercial (0°C to +70°C) and industrial (-40°C to +85°C) temperature ranges. An internal block diagram of the USB4716 is shown in Figure 2-1.

FIGURE 2-1: INTERNAL BLOCK DIAGRAM

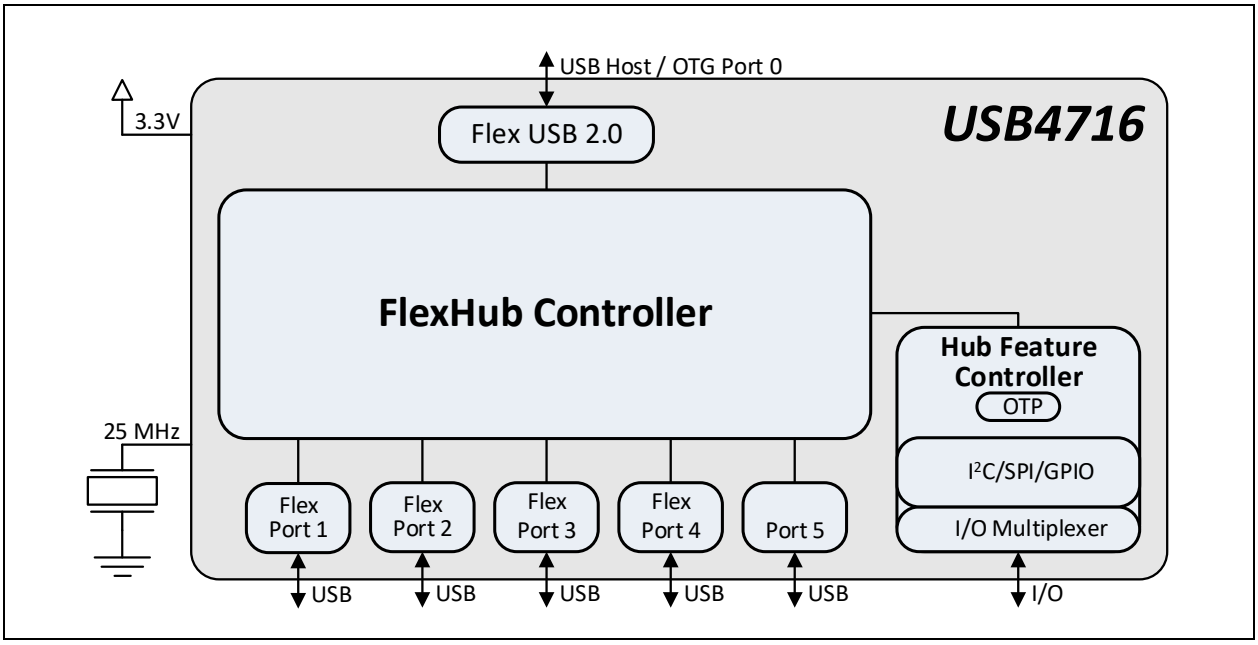

3.0 PIN DESCRIPTIONS AND CONFIGURATION

The pin assignments for the USB4716 are detailed in Section 3.1, "USB4716 Pin Assignments". Pin descriptions are provided in Section 3.2, "Pin Descriptions".

3.1 USB4716 Pin Assignments

The device pin diagram for the USB4716 can be seen in Figure 3-1. Table 3-1 provides a USB4716 pin assignments table. Pin descriptions are provided in Section 3.2, "Pin Descriptions".

FIGURE 3-1: USB4716 PIN ASSIGNMENTS

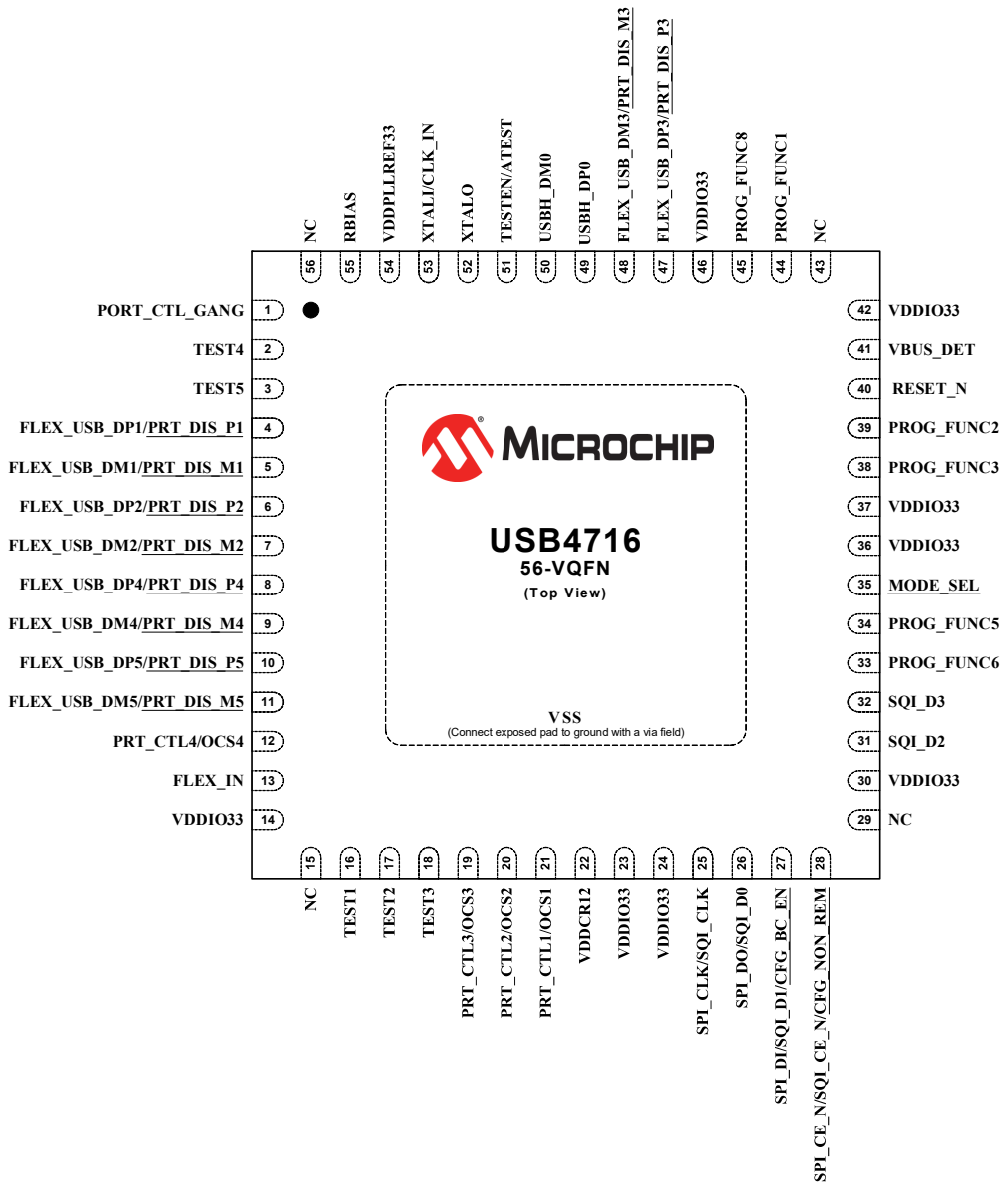

Note: Exposed pad (VSS) on bottom of package must be connected to ground with a via field.

Note:	Configuration straps are identified by an underlined symbol name. Signals that function as configuration straps must be augmented with an external resistor when connected to a load.

TABLE 3-1: USB4716 PIN ASSIGNMENTS

Pin	Pin Name	Reset	Pin	Pin Name	Reset
1	PORT_CTL_GANG	PD-67k	29	NC	-
2	TEST4	Z	30	VDDIO33	A/P
3	TEST5	Z	31	SQI_D2	Z
4	FLEX_USB_DP1/PRT_DIS_P1	PD-15k	32	SQI_D3	Z
5	FLEX_USB_DM1/PRT_DIS_M1	PD-15k	33	PROG_FUNC6	Z
6	FLEX_USB_DP2/PRT_DIS_P2	PD-15k	34	PROG_FUNC5	Z
7	FLEX_USB_DM2/PRT_DIS_M2	PD-15k	35	MODE_SEL	Z
8	FLEX_USB_DP4/PRT_DIS_P4	PD-15k	36	VDDIO33	A/P
9	FLEX_USB_DM4/PRT_DIS_M4	PD-15k	37	VDDIO33	A/P
10	FLEX_USB_DP5/PRT_DIS_P5	PD-15k	38	PROG_FUNC3	Z
11	FLEX_USB_DM5/PRT_DIS_M5	PD-15k	39	PROG_FUNC2	Z
12	PRT_CTL4/OCS4	PD-67k	40	RESET_N	PD-67k
13	FLEX_IN	PD-67k	41	VBUS_DET	Z
14	VDDIO33	A/P	42	VDDIO33	A/P
15	NC	-	43	NC	-
16	TEST1	Z	44	PROG_FUNC1	Z
17	TEST2	Z	45	PROG_FUNC8	Z
18	TEST3	Z	46	VDDIO33	A/P
19	PRT_CTL3/OCS3	PD-67k	47	FLEX_USB_DP3/PRT_DIS_P3	PD-15k
20	PRT_CTL2/OCS2	PD-67k	48	FLEX_USB_DM3/PRT_DIS_M3	PD-15k
21	PRT_CTL1/OCS1	PD-67k	49	USBH_DP0	USB
22	VDDCR12	A/P	50	USBH_DM0	USB
23	VDDIO33	A/P	51	TESTEN/ATEST	A/P
24	VDDIO33	A/P	52	XTALO	A/P
25	SPI_CLK/SQI_CLK	Z	53	XTALI/CLK_IN	A/P
26	SPI_DO/SQI_D0	PD-67k	54	VDDPLLREF33	A/P
27	SPI_DI/SQI_D1/CFG_BC_EN	Z	55	RBIAS	A/P
28	SPI_CE_N/SQI_CE_N/ CFG_NON_REM	PU-67k	56	NC	-
Exposed Pad (VSS) must be connected to ground.					

© 2024 Microchip Technology Inc. and its subsidiaries

3.2 Pin Descriptions

TABLE 3-2: PIN DESCRIPTIONS

Name	Symbol	Buffer Type	Description
USB Interface			
USB Upstream D+	**USBH_DP0**	I/O-U	Upstream USB 2.0 Data Plus (D+)
USB Upstream D-	**USBH_DM0**	I/O-U	Upstream USB 2.0 Data Minus (D-)
USB Downstream Ports 5-1 D+	**FLEX_USB_DP[5:1]**	I/O-U	Downstream USB 2.0 Ports 5-1 Data Plus (D+)
USB Downstream Ports 5-1 D-	**FLEX_USB_DM[5:1]**	I/O-U	Downstream USB 2.0 Ports 5-1 Data Minus (D-)
USB Port Control Pins			
USB Ports 4-1 Power Enable	**PRT_CTL[4:1]**	I/O12	When the downstream port is enabled, this pin is set as an input with an internal pull-up resistor applied. The internal pull-up enables power to the downstream port while the pin monitors for an active low overcurrent signal assertion from an external current monitor on USB port 4. This pin will change to an output and be driven low when the port is disabled by configuration or by the host control.
USB Ports 4-1 Overcurrent Sense	**OCS[4:1]**	I/O12	Overcurrent sense for ports 4-1.
Gang Power	**PRT_CTL_GANG**	I/O12	This pin becomes the port control pin for all downstream ports when the hub is configured for ganged port power control mode. All port power controllers are controlled from this pin when the hub is configured for ganged port power mode.
SPI Interface Pins			
SPI Clock	**SPI_CLK**	I/O4	SPI clock.
SPI Data Out	**SPI_DO**	I/O4	SPI output data. If the SPI interface is enabled, this signal is the data out for the SPI port.
SPI Data In	**SPI_DI**	I/O4	SPI input data. If the SPI interface is enabled, this signal must have a weak pull-down applied at all times to prevent floating. **Note:** If SPI interface is not utilized, this pin cannot be left floating. It must be connected per the CFG_BC_EN pin description.

TABLE 3-2: PIN DESCRIPTIONS (CONTINUED)

Name	Symbol	Buffer Type	Description
SPI Chip Enable	**SPI_CE_EN**	I/O4	Active low SPI chip enable input. If the SPI interface is enabled, this pin must be driven high in powerdown states. **Note:** If SPI interface is not utilized, this pin cannot be left floating. It must be connected per the CFG_NON_REM pin description.
SQI Interface Pins			
SQI Clock	**SQI_CLK**	I/O4	SQI clock.
SQI Data 0-3	**SQI_D[0:3]**	I/O4	SQI Data 0-3. If the SQI interface is enabled, these signals function as Data 0 through 3.
SQI Chip Enable	**SQI_CE_EN**	I/O4	Active low SQI chip enable input. If the SQI interface is enabled, this pin requires an external pull-up resistor. **Note:** If SQI interface is not utilized, this pin cannot be left floating. It must be connected per the CFG_NON_REM pin description.
Miscellaneous			
Programmable Functions 8,6,5,3,2,1	**PROG_FUNC [8/6/5/3/2/1]**	I/O12	Refer to Section 3.3.5, "PROG_FUNC[8/6/5/3/2/1] Configuration" for additional information.
Flex In	**FLEX_IN**	IS	Controls the state of FlexConnect: 0 = Port 0 is the upstream facing port (Port 1 is a downstream facing port) 1 = Port 1 is the upstream facing port (Port 0 becomes downstream facing Port 1) **Note:** In 2x4 Mode, downstream Port 1 / Port 0 will be disabled and will not operate as a downstream facing port within the application.
VBUS Detection	**VBUS_DET**	I	This signal detects the state of the upstream bus power. When designing a detachable hub, this pin must be connected to the VBUS power pin of the upstream USB port through a resistor divider (50 kΩ by 100 kΩ) to provide 3.3 V. For self-powered applications with a permanently attached host, this pin must be connected to either 3.3 V or 5.0 V through a resistor divider to provide 3.3 V. In embedded applications, **VBUS_DET** may be controlled (toggled) when the host desires to renegotiate a connection without requiring a full reset of the device.
Reset Input	**RESET_N**	I	This active low signal is used by the system to reset the device. The active low pulse should be at least 1 µs wide.
Bias Resistor	**RBIAS**	I-R	A 12.0 kΩ ±1.0% resistor is attached from ground to this pin to set the transceiver's internal bias settings. Place the resistor as close to the device as possible with a dedicated, low impedance connection to the GND plane.

© 2024 Microchip Technology Inc. and its subsidiaries

TABLE 3-2: PIN DESCRIPTIONS (CONTINUED)

Name	Symbol	Buffer Type	Description
External 25 MHz Crystal Input	**XTALI**	ICLK	External 25 MHz crystal input.
External 25 MHz Reference Clock Input	**CLK_IN**	ICLK	External reference clock input. The device may alternatively be driven by a single-ended clock oscillator. When this method is used, **XTALO** should be left unconnected.
External 25 MHz Crystal Output	**XTALO**	OCLK	External 25 MHz crystal output.
Test	**TESTEN**	A	Test pin. This signal is used for test purposes and must always be connected to ground.
Analog Test	**ATEST**	A	Analog test pin. This signal is used for test purposes and must always be connected to ground.
Test 1	**TEST1**	A	Test 1 pin. This signal is used for test purposes and must always be pulled-up to 3.3V via a 4.7 kΩ resistor.
Test 2	**TEST2**	A	Test 2 pin. This signal is used for test purposes and must always be pulled-down to ground via a 4.7 kΩ resistor.
Test 3	**TEST3**	A	Test 3 pin. This signal is used for test purposes and must always be pulled-down to ground via a 4.7 kΩ resistor.
Test 4	**TEST4**	A	Test 4 pin. This signal is used for test purposes and must always be pulled-up to 3.3V via a 200 kΩ resistor.
Test 5	**TEST5**	A	Test 5 pin. This signal is used for test purposes and must always be pulled-down to ground via a 200 kΩ resistor.
No Connect	**NC**	-	No Connect For proper operation, this pin should be left unconnected.

© 2024 Microchip Technology Inc. and its subsidiaries

TABLE 3-2: PIN DESCRIPTIONS (CONTINUED)

Name	Symbol	Buffer Type	Description
Configuration Straps			
Mode Selection Configuration Strap	**MODE_SEL**	IS	Selects hub operation mode. 0 = 1x5 Mode: Hub operates in a 1 upstream, 5 downstream port configuration. 1 = 2x4 Mode: Hub operates in a 2 upstream, 4 downstream port configuration. See Note 3-1 for more information on configuration straps.
Port 5-1 D+ Disable Configuration Strap	**PRT_DIS_P[5:1]**	I	Port 5-1 D+ Disable configuration strap. These configuration straps are used in conjunction with the corresponding **PRT_DIS_M[5:1]** straps to disable the related port (5-1). See Note 3-1. Both USB data pins for the corresponding port must be tied to 3.3V to disable the associated downstream port.
Port 5-1 D- Disable Configuration Strap	**PRT_DIS_M[5:1]**	I	Port 5-1 D- Disable configuration strap. These configuration straps are used in conjunction with the corresponding **PRT_DIS_P[5:1]** straps to disable the related port (5-1). See Note 3-1. Both USB data pins for the corresponding port must be tied to 3.3V to disable the associated downstream port.
Non-Removable Ports Configuration Strap	**CFG_NON_REM**	I	Non-Removable Ports Configuration Strap. This configuration strap controls the number of reported non-removable ports. See Note 3-1.
Battery Charging Configuration Strap	**CFG_BC_EN**	I	Battery Charging Configuration Strap. This configuration strap controls the number of BC 1.2 enabled downstream ports. See Note 3-1.
Power/Ground			
+3.3V I/O Power Supply Input	**VDDIO33**	P	+3.3V I/O power supply input.
+3.3V Analog Power Supply Input	**VDDPLLREF33**	P	+3.3V master bias / PLL regulator supply input.
+1.2V Core Power Supply Output	**VDDCR12**	P	+1.2V digital core power supply output. **Note:** This signal requires connection of a 1uF low-ESR capacitor to ground.
Ground	**VSS**	P	Ground pins.

Note 3-1 Configuration strap values are latched on Power-On Reset (POR) and the rising edge of **RESET_N** (external chip reset). Configuration straps are identified by an underlined symbol name. Signals that function as configuration straps must be augmented with an external resistor when connected to a load. For additional information, refer to Section 3.3, "Configuration Straps and Programmable Functions".

© 2024 Microchip Technology Inc. and its subsidiaries

3.3 Configuration Straps and Programmable Functions

Configuration straps are multi-function pins that are used during Power-On Reset (POR) or external chip reset (**RESET_N**) to determine the default configuration of a particular feature. The state of the signal is latched following de-assertion of the reset. Configuration straps are identified by an underlined symbol name. This section details the various device configuration straps and associated programmable pin functions.

Note:	The system designer must guarantee that configuration straps meet the timing requirements specified in Section 9.6.2, "Power-On and Configuration Strap Timing" and Section 9.6.3, "Reset and Configuration Strap Timing". If configuration straps are not at the correct voltage level prior to being latched, the device may capture incorrect strap values.

3.3.1 PORT DISABLE CONFIGURATION (PRT_DIS_P[5:1] / PRT_DIS_M[5:1])

The **PRT_DIS_P[5:1]** / **PRT_DIS_M[5:1]** configuration straps are used in conjunction to disable the related port (5-1).

For **PRT_DIS_P*x*** (where *x* is the corresponding port 5-1):

0 = Port *x* D+ Enabled

1 = Port *x* D+ Disabled

For **PRT_DIS_M*x*** (where *x* is the corresponding port 5-1):

0 = Port *x* D- Enabled

1 = Port *x* D- Disabled

Note:	Both **PRT_DIS_P*x*** and **PRT_DIS_M*x*** (where ***x*** is the corresponding port) must be tied to 3.3 V to disable the associated downstream port.

3.3.2 NON-REMOVABLE PORT CONFIGURATION (CFG_NON_REM)

The **CFG_NON_REM** configuration strap is used to configure the non-removable port settings of the device to one of five settings. These modes are selected by the configuration of an external resistor on the **CFG_NON_REM** pin. The resistor options are a 200 kΩ pull-down, 200 kΩ pull-up, 10 kΩ pull-down, 10 kΩ pull-up, and 10 Ω pull-down, as shown in Table 3-3.

TABLE 3-3: CFG_NON_REM RESISTOR ENCODING

CFG_NON_REM Resistor Value	Setting
200 kΩ Pull-Down	Port 1- removable
200 kΩ Pull-Up	Port 1 non-removable
10 kΩ Pull-Down	Port 1, 2 non-removable
10 kΩ Pull-Up	Port 1, 2, 3 non-removable
10 Ω Pull-Down	Port 1, 2, 3, 4 non-removable

© 2024 Microchip Technology Inc. and its subsidiaries

3.3.3 BATTERY CHARGING CONFIGURATION (CFG_BC_EN)

The **CFG_BC_EN** configuration strap is used to configure the battery charging port settings of the device to one of five settings. These modes are selected by the configuration of an external resistor on the **CFG_BC_EN** pin. The resistor options are a 200 kΩ pull-down, 200 kΩ pull-up, 10 kΩ pull-down, 10 kΩ pull-up, and 10 Ω pull-down, as shown in Table 3-4.

TABLE 3-4: CFG_BC_EN RESISTOR ENCODING

CFG_NON_REM Resistor Value	Setting
200 kΩ Pull-Down	No battery charging
200 kΩ Pull-Up	Port 1 battery charging
10 kΩ Pull-Down	Port 1, 2 battery charging
10 kΩ Pull-Up	Port 1, 2, 3 battery charging
10 Ω Pull-Down	Port 1, 2, 3, 4 battery charging

3.3.4 MODE SELECTION (MODE_SEL)

The **MODE_SEL** configuration strap is sampled at RESET_N negation to determine the device's mode of operation, 1x5 Mode or 2x4 Mode, as follows:

TABLE 3-5: MODE_SEL CONFIGURATION DEFINITIONS

MODE_SEL	Definition
0	**1x5 Mode:** Hub operates in a 1 upstream, 5 downstream port configuration.
1	**2x4 Mode:** Hub operates in a 2 upstream, 4 downstream port configuration.

3.3.4.1 1x5 Mode

In this mode, the hub can operate as a standard 5-port hub device by adding a weak pull-down to the FLEX_IN pin. Alternatively, when using the FLEX_IN pin, the hub operates with two possible upstream ports and four downstream ports. The FLEX_IN pin controls which port is the upstream port (Port 0 or Port 1).

TABLE 3-6: 1X5 MODE CONFIGURATION

FLEX_IN STATE	Port 0	Port 1	Ports 2-5
0	Upstream Port	Standard Downstream Port	Standard Downstream Ports Port 2 remapped to Logical Port 1 Port 3 remapped to Logical Port 2 Port 4 remapped to Logical Port 3 Port 5 remapped to Logical Port 4
1	Downstream Port	Upstream Port	Standard Downstream Ports Port 2 remapped to Logical Port 1 Port 3 remapped to Logical Port 2 Port 4 remapped to Logical Port 3 Port 5 remapped to Logical Port 4

3.3.4.2 2x4 Mode

In this mode, the hub operates as with 2 possible upstream ports and 4 downstream ports. The FLEX_IN pin controls which port is the upstream port (Port 0 or Port1):

© 2024 Microchip Technology Inc. and its subsidiaries

TABLE 3-7: 2X4 MODE CONFIGURATION

FLEX_IN STATE	Port 0	Port 1	Ports 2-5
0	Upstream Port	Not used, Port 1 disabled	Standard Downstream Ports Port 2 remapped to Logical Port 1 Port 3 remapped to Logical Port 2 Port 4 remapped to Logical Port 3 Port 5 remapped to Logical Port 4
1	Not used, Port 0 disabled	Upstream Port	Standard Downstream Ports Port 2 remapped to Logical Port 1 Port 3 remapped to Logical Port 2 Port 4 remapped to Logical Port 3 Port 5 remapped to Logical Port 4

3.3.5 PROG_FUNC[8/6/5/3/2/1] CONFIGURATION

The USB4716 provides 6 programmable function pins (**PROG_FUNC[8/6/5/3/2/1]**). A summary of the configuration pin assignments for is provided in Table 3-8. For details on behavior of each programmable function, refer to Table 3-9.

TABLE 3-8: PROG_FUNC[8:1] FUNCTION ASSIGNMENT

Pin	Configuration
PROG_FUNC_1	SMB1_DAT
PROG_FUNC_2	GPIO2
PROG_FUNC_3	GPIO3
PROG_FUNC_4	GPIO6
PROG_FUNC_5	SMB2_DAT
PROG_FUNC_6	SMB2_CLK
PROG_FUNC_7	GPIO11
PROG_FUNC_8	SMB1_CLK

TABLE 3-9: PROGRAMMABLE FUNCTIONS DESCRIPTIONS

Function	Buffer Type	Description
SMBus Master Interface		
SMB1_CLK	I/OD12	SMBus Master Clock
SMB1_DAT	I/OD12	SMBus Master Data
SMBus Slave Interface		
SMB2_CLK	I/OD12	SMBus Slave Clock For proper SMBus slave operation, an external 10 kΩ resistor is required on this signal.
SMB2_DAT	I/OD12	SMBus Slave Data For proper SMBus slave operation, an external 10 kΩ resistor is required on this signal.
Miscellaneous		

© 2024 Microchip Technology Inc. and its subsidiaries

TABLE 3-9: PROGRAMMABLE FUNCTIONS DESCRIPTIONS (CONTINUED)

Function	Buffer Type	Description
GPIO*x*	I/O12	General Purpose Inputs/Outputs (*x* = 2, 3, 6, 11)

© 2024 Microchip Technology Inc. and its subsidiaries

4.0 DEVICE CONNECTIONS

4.1 Power Connections

Figure 4-1 illustrates the device power connections.

FIGURE 4-1: POWER CONNECTIONS

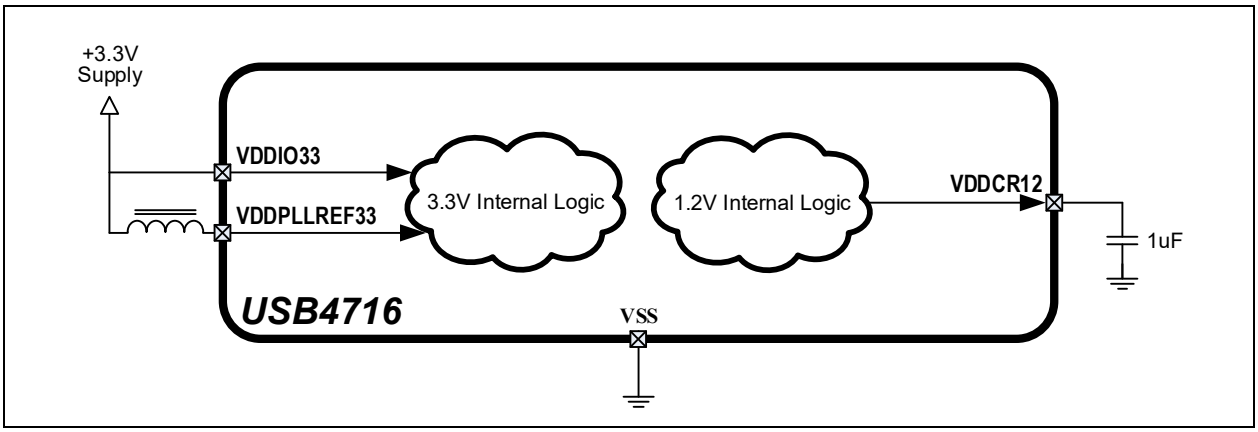

4.2 SPI Flash Connections

Figure 4-2 illustrates the device SPI Flash connections.

FIGURE 4-2: SPI FLASH CONNECTIONS

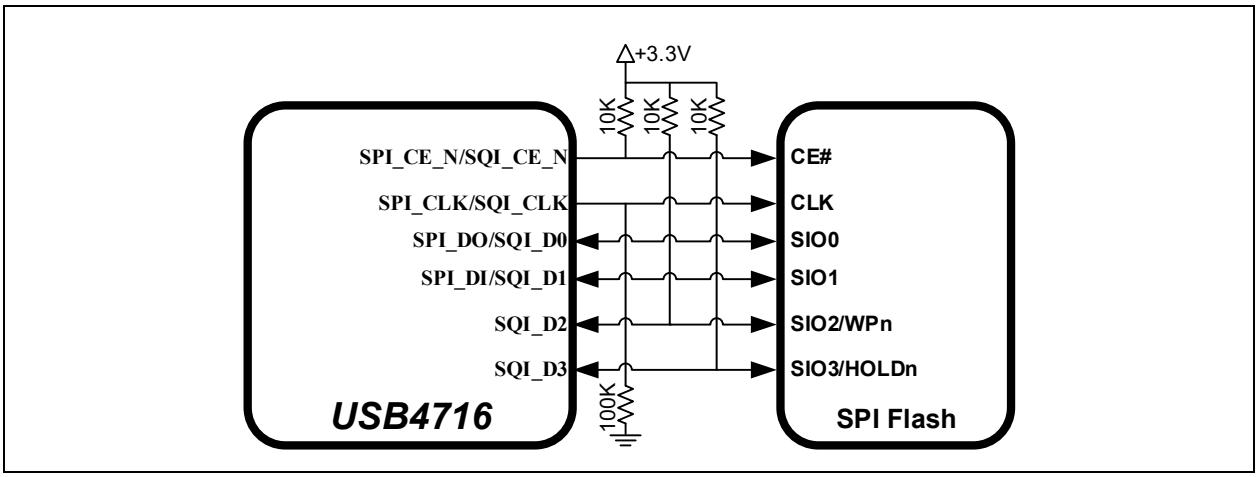

4.3 SMBus Connections

Figure 4-3 illustrates the device SMBus Connections.

FIGURE 4-3: SMBUS CONNECTIONS

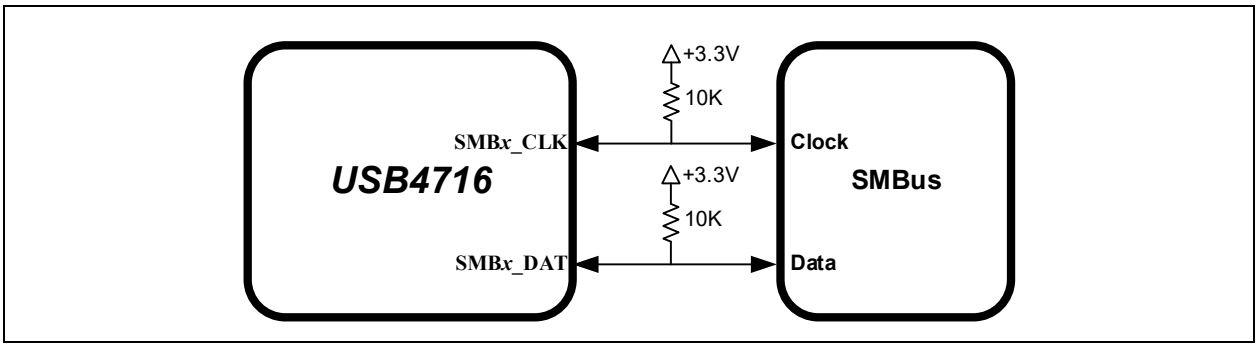

© 2024 Microchip Technology Inc. and its subsidiaries

5.0 MODES OF OPERATION

The device provides two main modes of operation: Standby Mode and Hub Mode. These modes are controlled via the RESET_N pin, as shown in Table 5-1.

TABLE 5-1: MODES OF OPERATION

RESET_N Input	Summary
0	**Standby Mode**: This is the lowest power mode of the device. No functions are active other than monitoring the RESET_N input. All port interfaces are high impedance and the PLL is halted. Refer to Section 8.8, "Resets" for additional information on RESET_N.
1	**Hub (Normal) Mode**: The device operates as a configurable USB hub. This mode has various sub-modes of operation, as detailed in Figure 5-1. Power consumption is based on the number of active ports, their speed, and amount of data received.

The flowchart in Figure 5-1 details the modes of operation and details how the device traverses through the Hub Mode stages (shown in bold). The remaining sub-sections provide more detail on each stage of operation.

FIGURE 5-1: HUB MODE FLOWCHART

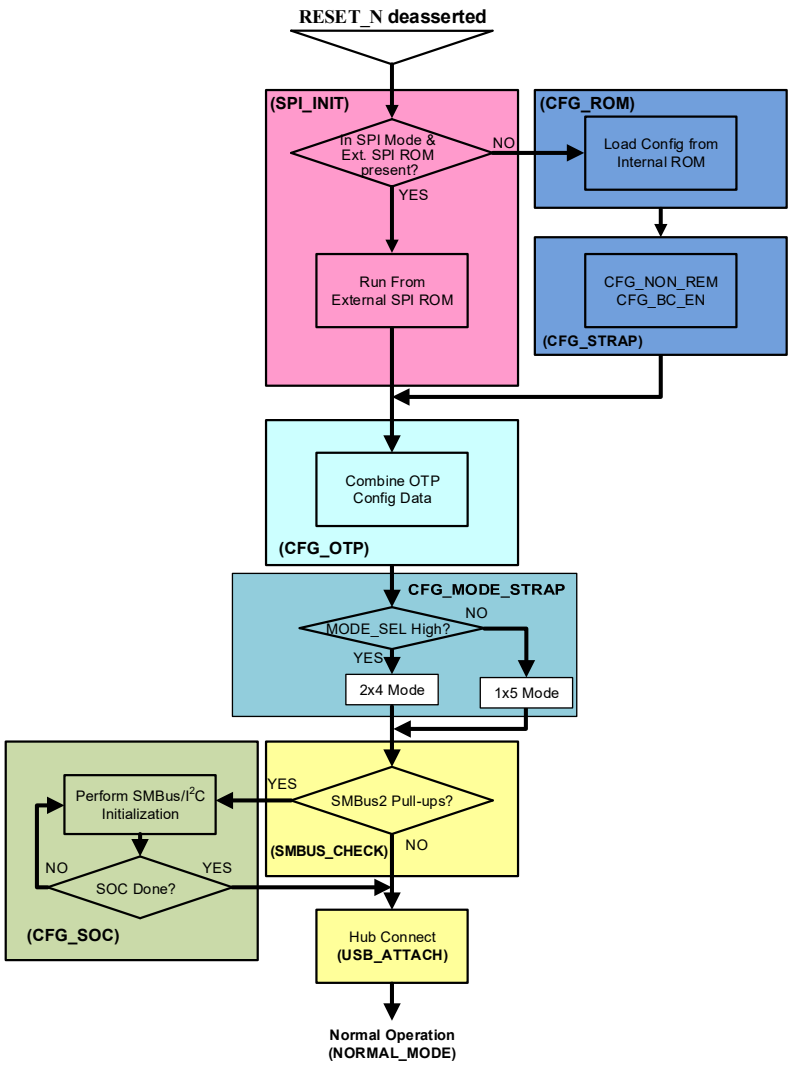

5.1 Boot Sequence

5.1.1 STANDBY MODE

If the **RESET_N** pin is asserted, the hub will be in Standby Mode. This mode provides a very low power state for maximum power efficiency when no signaling is required. This is the lowest power state. In Standby Mode all downstream ports are disabled, the USB data pins are held in a high-impedance state, all transactions immediately terminate (no states saved), all internal registers return to their default state, the PLL is halted, and core logic is powered down in order to minimize power consumption. Because core logic is powered off, no configuration settings are retained in this mode and must be re-initialized after **RESET_N** is negated high.

5.1.2 SPI INITIALIZATION STAGE (SPI_INIT)

The first stage, the initialization stage, occurs on the deassertion of **RESET_N**. In this stage, the internal logic is reset, the PLL locks if a valid clock is supplied, and the configuration registers are initialized to their default state. The internal firmware then checks for an external SPI ROM. The firmware looks for an external SPI flash device that contains a valid signature of “2DFU” (device firmware upgrade) beginning at address 0xFFFA. If a valid signature is found, then the SPI Firmware/external SPI ROM is enabled and the code execution begins at address 0x0000 in the external SPI device. If a valid signature is not found, then execution continues from internal ROM (CFG_ROM stage).

When using an external SPI ROM, a minimum of 2.2 Mbit is required, and 60 MHz or faster SPI ROM must be used. Both 1- and 2-bit SPI ROM are supported. For optimum throughput, a 2-bit SPI ROM is recommended. Both mode 0 and mode 3 SPI flashes are supported.

If the system is not strapped for SPI Mode, code execution will continue from internal ROM (CFG_ROM stage).

5.1.3 CONFIGURATION FROM INTERNAL ROM STAGE (CFG_ROM)

In this stage, the internal firmware loads the default values from the internal ROM. Most of the hub configuration registers, USB descriptors, electrical settings, etc. will be initialized in this state even when running from SPI.

5.1.4 CONFIGURATION STRAP READ STAGE (CFG_STRAP)

In this stage, the firmware reads the following configuration straps to override the default values:

- **PRT_DIS_P[5:1]**
- **PRT_DIS_M[5:1]**
- **CFG_NON_REM**
- **CFG_BC_EN**

The device will then move to the CFG_OTP stage. Refer to Section 3.3, "Configuration Straps and Programmable Functions" for information on usage of the various device configuration straps.

5.1.5 OTP CONFIGURATION STAGE (CFG_OTP)

Once the SOC has indicated that it is done with configuration, all configuration data is combined in this stage. The default data, the SOC configuration data, and the OTP data are all combined in the firmware and the device is programmed.

Note:	Changes to hub registers made in OTP memory space are not visible via SMBus during CFG_SOC stage. Any register which is modified via SMBus during SOC_CFG and also modified in the OTP memory will exit the configuration stages with the value as programmed in the OTP memory.

5.1.6 CONFIGURATION MODE STRAP STAGE (CFG_MODE_STRAP)

In this stage, the firmware reads the **MODE_SEL** configuration strap and the upstream mode of operation is updated accordingly:

- If **MODE_SEL** is low, the device is configured for 1x5 mode (1 upstream, 5 downstream port configuration)
- If **MODE_SEL** is high, the device is configured for 2x4 mode (2 upstream, 4 downstream port configuration)

Refer to Section 3.3, "Configuration Straps and Programmable Functions" for information on usage of the various device configuration straps.

© 2024 Microchip Technology Inc. and its subsidiaries

5.1.7 SMBUS CHECK STAGE (SMBUS_CHECK)

The firmware will check for the presence of external pull up resistors on the SMBus slave programmable function pins. If 10K pull-ups are detected on both pins, the device will be configured as an SMBus slave, and the next state will be CFG_SOC. If a pull-up is not detected in either of the pins, the next state is USB_ATTACH.

5.1.8 SOC CONFIGURATION STAGE (CFG_SOC)

In this stage, the SOC can modify any of the default configuration settings specified in the integrated ROM, such as USB device descriptors, port electrical settings, and control features such as downstream battery charging.

In this stage the firmware will wait indefinitely for the SMBus/I^2C configuration there is no time limit on this stage. The external SMBus master writes to register 0xFF, to end the configuration in legacy mode. In non-legacy mode, the SMBus command USB_ATTACH (opcode 0xAA55) or USB_ATTACH_WITH_SMBUS (opcode 0xAA56) will finish the configuration.

Note: This state will only be entered upon the first POR.

5.1.9 HUB CONNECT STAGE (USB_ATTACH)

Once the hub registers are updated through default values, SMBus master, and OTP, the device firmware will enable attaching the USB host by setting the USB_ATTACH bit in the HUB_CMD_STAT register. The device will remain in the Hub Connect stage indefinitely until the VBUS function is deasserted/assertion of external RESET_N pin.

5.1.10 NORMAL MODE (NORMAL_MODE)

Lastly, the hub enters Normal Mode of operation. In this stage full USB operation is supported under control of the USB Host on the upstream port. The device will remain in the normal mode until the operating mode is changed by the USB Host.

If **RESET_N** is asserted low, then Standby Mode is entered. The device may then be placed into any of the designated hub stages. Asserting a soft disconnect on the upstream port will cause the hub to return to the Hub Connect stage until the soft disconnect is negated.

© 2024 Microchip Technology Inc. and its subsidiaries

6.0 DEVICE CONFIGURATION

The device supports a large number of features (some mutually exclusive), and must be configured in order to correctly function when attached to a USB host controller. The hub can be configured either internally or externally depending on the implemented interface.

Microchip provides a comprehensive software programming tool, MPLAB Connect (formerly ProTouch2), for OTP configuration of various USB4716 functions and registers. All configuration is to be performed via the MPLAB Connect Configurator programming tool. For additional information on this tool, refer to th MPLAB Connect Configurator programming tool product page at http://www.microchip.com/design-centers/usb/mplab-connect-configurator.

Additional information on configuring the USB4716 via SMBus is provided in the *AN2651 - Configuration of Microchip USB47xx/USB49xx*" application note, which contains details on the hub operational mode, SOC configuration stage, OTP configuration, USB configuration, and configuration register definitions. This application note, along with other USB4716 resources, can be found on the Microchip USB4716 product page at www.microchip.com/USB4716.

Note:	Device configuration straps and programmable pins are detailed in Section 3.3, "Configuration Straps and Programmable Functions," on page 13. Refer to Section 7.0, "Device Interfaces" for detailed information on each device interface.

7.0 DEVICE INTERFACES

The USB4716 provides multiple interfaces for configuration, external memory access, etc.. This section details the various device interfaces and their usage:

- SPI/SQI Master Interface
- SMBus/I2C Master/Slave Interfaces

Note: For details on how to enable each interface, refer to Section 3.3, "Configuration Straps and Programmable Functions".

For information on device connections, refer to Section 4.0, "Device Connections". For information on device configuration, refer to Section 6.0, "Device Configuration".

Microchip provides a comprehensive software programming tool, MPLAB Connect (formerly ProTouch2), for configuring the USB4716 functions, registers and OTP memory. All configuration is to be performed via the MPLAB Connect Configurator programming tool. For additional information on this tool, refer to th MPLAB Connect Configurator programming tool product page at http://www.microchip.com/design-centers/usb/mplab-connect-configurator.

7.1 SPI/SQI Master Interface

The SPI/SQI controller has two basic modes of operation: execution of an external hub firmware image, or the USB to SPI bridge. On power up, the firmware looks for an external SPI flash device that contains a valid signature of `2DFU` (device firmware upgrade) beginning at address 0xFFFA. If a valid signature is found, then the external ROM mode is enabled and the code execution begins at address 0x0000 in the external SPI device. If a valid signature is not found, then execution continues from internal ROM and the SPI interface can be used as a USB to SPI bridge.

The second mode of operation is the USB to SPI bridge operation. Additional details on this feature can be found in Section 8.5, "USB to SPI Bridging" as well as the *AN2430 - USB to SPI Bridging with USB4715 and USB49xx* application note.

Table 7-1 details how the associated pins are mapped in SPI vs. SQI mode

TABLE 7-1: SPI/SQI PIN USAGE

SPI Mode	SQI Mode	Description
SPI_CE_N	SQI_CE_N	SPI/SQI Chip Enable (Active Low)
SPI_CLK	SQI_CLK	SPI/SQI Clock
SPI_DO	SQI_D0	SPI Data Out; SQI Data I/O 0
SPI_DI	SQI_D1	SPI Data In; SQI Data I/O 1
-	SQI_D2	SQI Data I/O 2
-	SQI_D3	SQI Data I/O 3

Note: For SPI timing information, refer to Section 9.6.7, "SPI/SQI Timing".

7.2 SMBus/I^{2}C Master/Slave Interfaces

The USB4716 provides two independent SMBus/I^{2}C controllers SMBus 1 and SMBus 2, which can be used to access internal device run time registers or program the internal OTP memory. SMBus 1 is used as the USB to SMBus/I^{2}C bridge, and SMBus 2 is used as the slave interface. The device contains two 128 byte buffers to enable simultaneous master/slave operation and to minimize firmware overhead in processed SMBus/I^{2}C packets.

© 2024 Microchip Technology Inc. and its subsidiaries

The SMBus 1 and SMBus 2 interfaces are assigned to programmable pins (**PROG_FUNC_*x***) and therefore the device must be programmed into specific configurations to enable both interfaces. Refer to Section 3.3.5, "PROG_FUNC[8/6/5/3/2/1] Configuration" for additional information.

Note:	For SMBus/I^{2}C timing information, refer to Section 9.6.5, "SMBus Timing" and Section 9.6.6, "I2C Timing".

© 2024 Microchip Technology Inc. and its subsidiaries

8.0 FUNCTIONAL DESCRIPTIONS

This section details various USB4716 functions, including:

- Downstream Battery Charging
- FlexConnect
- USB to GPIO Bridging
- USB to SMBus/I2C Bridging
- USB to SPI Bridging
- Link Power Management (LPM)
- Port Power Control
- Resets

8.1 Downstream Battery Charging

The device can be configured by an OEM to have any of the downstream ports support battery charging. The hub's role in battery charging is to provide acknowledgment to a device's query as to whether the hub system supports USB battery charging. The hub silicon does not provide any current or power FETs or any additional circuitry to actually charge the device. Those components must be provided externally by the OEM.

FIGURE 8-1: BATTERY CHARGING EXTERNAL POWER SUPPLY

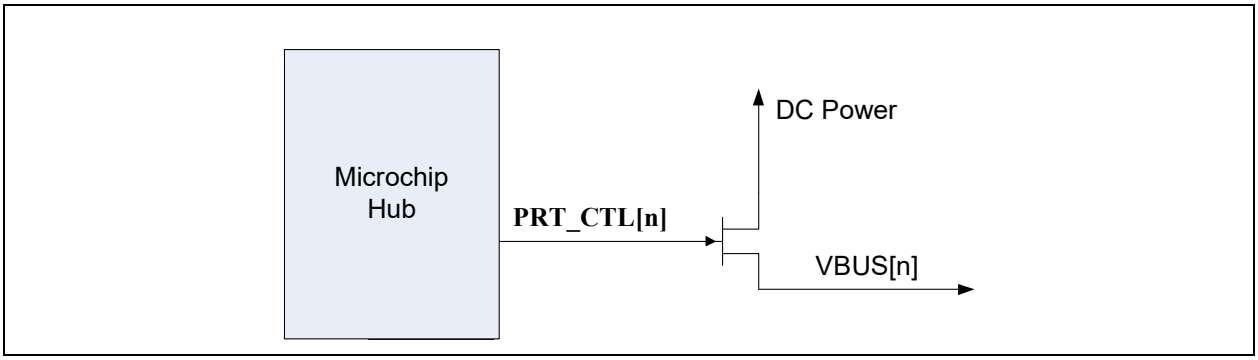

If the OEM provides an external supply capable of supplying current per the battery charging specification, the hub can be configured to indicate the presence of such a supply from the device. This indication, via a handshake on the D+ and D- at the start of the connection with the device, is on a per port basis. For example, the OEM can configure two ports to support battery charging through high current power FETs and leave the other two ports as standard USB ports.

For detailed information on utilizing the USB4716 battery charging feature, refer to the application note "*USB Battery Charging with Microchip USB4715 and USB49xx Hubs*", which can be found on the Microchip USB4716 product page at www.microchip.com/USB4716.

8.2 FlexConnect

The USB4716 allows any of the first 4 downstream ports to assume the role of USB host at any time during hub operation (Port 5 does not support FlexConnect). This host role exchange feature is called FlexConnect.

This functionality can be used in two primary ways:

1. **Host Swapping:** This functionality can be achieved through a hub wherein a host and device can agree to swap the host/device relationship; The host becomes a device, and the device becomes a host.
2. **Host Sharing:** A USB ecosystem can be shared between multiple hosts. Note that only 1 host may access to the USB tree at a time.

This feature allows the upstream port to be swapped with one of the physical downstream ports (1-4).

When in 2x4 mode and the hub is in a flexed state, physical port 1 will be disabled to ensure that while in the flexed state, physical port 0 does not operate as a downstream facing port.

When in 1x5 mode and the hub is in the flexed state, all downstream ports will continue to operate as downstream facing ports including physical port 0.

8.2.1 PIN CONTROL

Pin 13 is configured by default as the FLEX_IN control signal. When using FLEX_IN, the following shall be noted.

- PRT_CTL1/OCS1 is unused
- VBUS_DET will continue to operate as VBUS_DET when flexed

Figure 8-2 details a typical connection to the FLEX_IN pin. For Thunderbolt additional technical details and system design guidance, refer to the USB4716 Application Note “Integrating USB4716 into Thunderbolt™ Docking Applications.”

FIGURE 8-2: TYPICAL FLEXCONNECT DEVICE CONNECTIONS

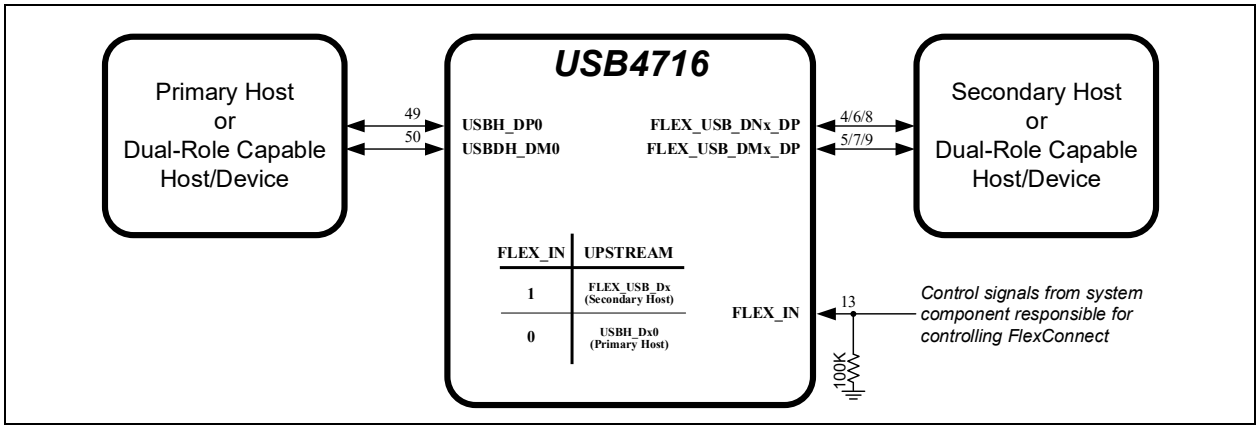

8.3 USB to GPIO Bridging

The USB to GPIO bridging feature of the USB4716 provides system designers expanded system control and potential BOM reduction. General Purpose Input/Outputs (GPIOs) may be used for any general 3.3V level digital control and input functions.

Commands may be sent from the USB Host to the internal Hub Feature Controller device in the Microchip hub to perform the following functions:

- Set the direction of the GPIO (input or output)
- Enable a pull-up resistor
- Enable a pull-down resistor
- Read the state
- Set the state

For detailed information on utilizing the USB4716 USB to GPIO bridging feature, refer to the application note “*AN2437 - USB to GPIO Bridging with Microchip USB4715 and USB49xx Hubs*”, which can be found on the Microchip USB4716 product page at www.microchip.com/USB4716.

8.4 USB to SMBus/I^{2}C Bridging

The USB to SMBus/I^{2}C bridging feature of the USB4716 provides system designers expanded system control and potential BOM reduction. The use of a separate USB to SMBus/I^{2}C device is no longer required and a downstream USB port is not lost, as occurs when a standalone USB to SMBus/I^{2}C device is implemented.

Commands may be sent from the USB Host to the internal Hub Feature Controller device in the Microchip hub to perform the following functions:

- Configure SMBus/I^{2}C Pass-Through Interface

© 2024 Microchip Technology Inc. and its subsidiaries

- SMBus/I^{2}C Write
- SMBus/I^{2}C Read

For detailed information on utilizing the USB4716 USB to SMBus/I^{2}C bridging feature, refer to the application note "*AN2438 - USB to I^{2}C Bridging with Microchip USB4715 and USB49xx Hubs*", which can be found on the Microchip USB4716 product page at www.microchip.com/USB4716.

8.5 USB to SPI Bridging

The USB to SPI bridging feature of the USB4716 provides system designers expanded system control and potential BOM reduction. The use of a separate USB to SPI device is no longer required and a downstream USB port is not lost, as occurs when a standalone USB to SPI device is implemented.

Commands may be sent from the USB Host to the internal Hub Feature Controller device in the Microchip hub to perform the following functions:

- Enable SPI Pass-Through Interface
- SPI Write/Read
- Disable SPI Pass-Through Interface

For detailed information on utilizing the USB4716 USB to SPI bridging feature, refer to the application note "*AN2430 - USB to SPI Bridging with Microchip USB4715 and USB49xx Hubs*", which can be found on the Microchip USB4716 product page at www.microchip.com/USB4716.

8.6 Link Power Management (LPM)

The device supports the L0 (On), L1 (Sleep), and L2 (Suspend) link power management states. These supported LPM states offer low transitional latencies in the tens of microseconds versus the much longer latencies of the traditional USB suspend/resume in the tens of milliseconds. The supported LPM states are detailed in Table 8-1.

TABLE 8-1: LPM STATE DEFINITIONS

State	Description	Entry/Exit Time to L0
L2	Suspend	Entry: ~3 ms Exit: ~2 ms (from start of RESUME)
L1	Sleep	Entry: <10 us Exit: <50 us
L0	Fully Enabled (On)	-

8.7 Port Power Control

Port power and over-current sense share the same pin (**PRT_CTLx**) for each port. These functions can be controlled directly from the USB hub, or via the processor.

The device can be configured into the following port control modes:

- Ganged Mode
- Combined Mode

8.7.1 PORT CONNECTION IN GANGED MODE

In this mode, one pin (**PRT_CTL_GANG**) is used to control port power and over-current sensing.

8.7.2 PORT CONNECTION IN COMBINED MODE

8.7.2.1 Port Power Control using USB Power Switch

When operating in combined mode, the device will have one port power control and over-current sense pin for each downstream port. When disabling port power, the driver will actively drive a '0'. To avoid unnecessary power dissipation, the pull-up resistor will be disabled at that time. When port power is enabled, it will disable the output driver and enable

the pull-up resistor, making it an open drain output. If there is an over-current situation, the USB Power Switch will assert the open drain OCS signal. The Schmidt trigger input will recognize that as a low. The open drain output does not interfere. The over-current sense filter handles the transient conditions such as low voltage while the device is powering up.

FIGURE 8-3: PORT POWER CONTROL WITH USB POWER SWITCH

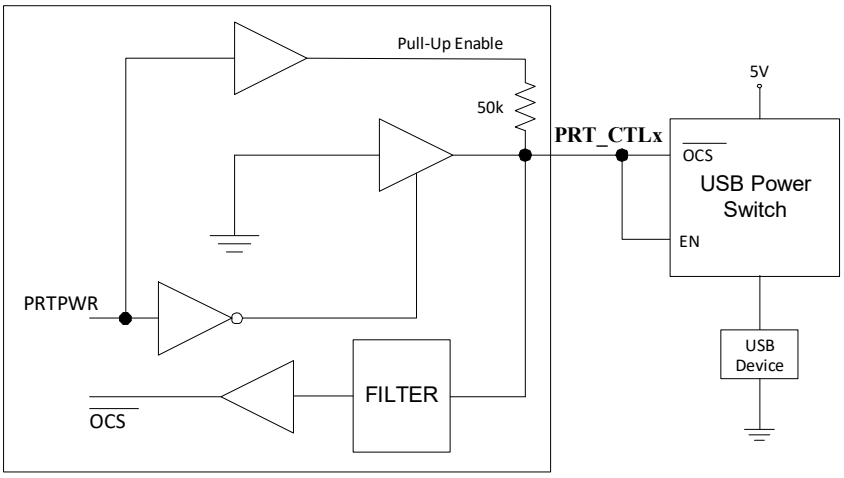

8.7.2.2 Port Power Control using Poly Fuse

When using the device with a poly fuse, there is no need for an output power control. To maintain consistency, the same circuit will be used. A single port power control and over-current sense for each downstream port is still used from the Hub's perspective. When disabling port power, the driver will actively drive a '0'. This will have no effect as the external diode will isolate pin from the load. When port power is enabled, it will disable the output driver and enable the pull-up resistor. This means that the pull-up resistor is providing 3.3 volts to the anode of the diode. If there is an over-current situation, the poly fuse will open. This will cause the cathode of the diode to go to 0 volts. The anode of the diode will be at 0.7 volts, and the Schmidt trigger input will register this as a low resulting in an over-current detection. The open drain output does not interfere.

FIGURE 8-4: PORT POWER CONTROL USING A POLY FUSE

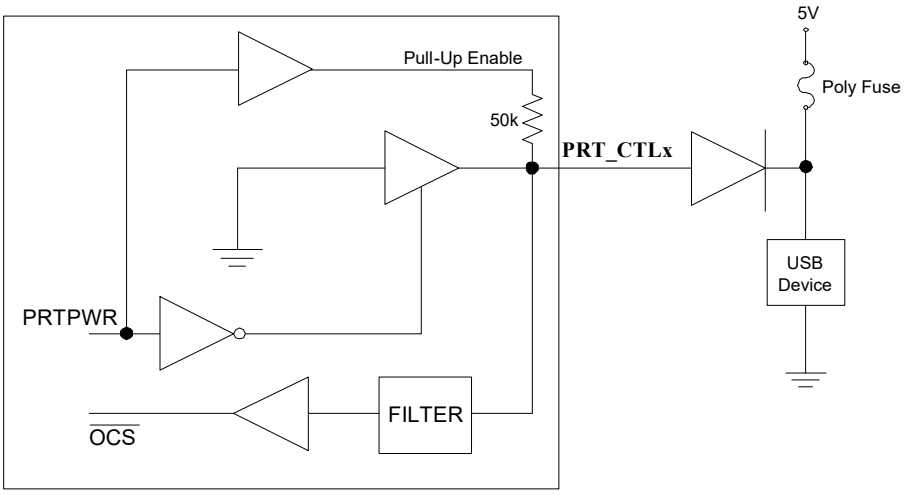

© 2024 Microchip Technology Inc. and its subsidiaries

8.7.2.3 Port Power Control with Single Poly Fuse and Multiple Loads

Many customers use a single poly fuse to power all their devices. For the ganged situation, all power control pins must be tied together.

FIGURE 8-5: PORT POWER CONTROL WITH GANGED CONTROL WITH POLY FUSE

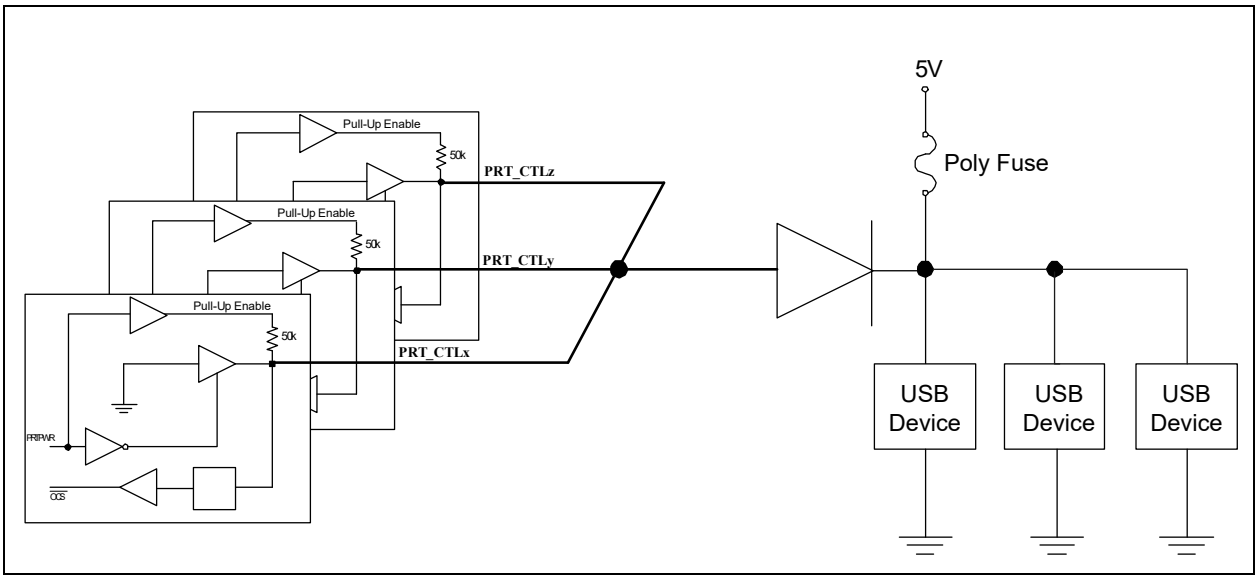

8.8 Resets

The device includes the following chip-level reset sources:

- Power-On Reset (POR)
- External Chip Reset (RESET_N)
- USB Bus Reset

8.8.1 POWER-ON RESET (POR)

A power-on reset occurs whenever power is initially supplied to the device, or if power is removed and reapplied to the device. A timer within the device will assert the internal reset per the specifications listed in Section 9.6.2, "Power-On and Configuration Strap Timing," on page 34.

8.8.2 EXTERNAL CHIP RESET (RESET_N)

A valid hardware reset is defined as assertion of **RESET_N**, after all power supplies are within operating range, per the specifications in Section 9.6.3, "Reset and Configuration Strap Timing," on page 35. While reset is asserted, the device (and its associated external circuitry) enters Standby Mode and consumes minimal current.

Assertion of **RESET_N** causes the following:

1. The PHY is disabled and the differential pairs will be in a high-impedance state.
2. All transactions immediately terminate; no states are saved.
3. All internal registers return to the default state.
4. The external crystal oscillator is halted.
5. The PLL is halted.

Note:	All power supplies must have reached the operating levels mandated in Section 9.2, "Operating Conditions**," on page 31, prior to (or coincident with) the assertion of **RESET_N**.

8.8.3 USB BUS RESET

In response to the upstream port signaling a reset to the device, the device performs the following:

1. Sets default address to 0.
2. Sets configuration to Unconfigured.
3. Moves device from suspended to active (if suspended).
4. Complies with the USB Specification for behavior after completion of a reset sequence.

The host then configures the device in accordance with the USB Specification.

Note:	The device does not propagate the upstream USB reset to downstream devices.

© 2024 Microchip Technology Inc. and its subsidiaries

9.0 OPERATIONAL CHARACTERISTICS

9.1 Absolute Maximum Ratings*

+3.3 V Supply Voltage (**VDDIO33**, **VDDPLLREF33**) (Note 9-1) . . . . . -0.5 V to +4.6 V

Positive voltage on input signal pins, with respect to ground (Note 9-2) . . . . . +4.6 V

Negative voltage on input signal pins, with respect to ground . . . . . -0.5 V

Positive voltage on **XTALI/CLK_IN**, with respect to ground . . . . . +3.6 V

Positive voltage on USB DP/DM signal pins, with respect to ground . . . . . +6.0 V

Storage Temperature . . . . . -55°C to +150°C

Junction Temperature . . . . . +125°C

Lead Temperature Range . . . . . Refer to JEDEC Spec. J-STD-020

HBM ESD Performance . . . . . 5 kV

Note 9-1 When powering this device from laboratory or system power supplies, it is important that the absolute maximum ratings not be exceeded or device failure can result. Some power supplies exhibit voltage spikes on their outputs when AC power is switched on or off. In addition, voltage transients on the AC power line may appear on the DC output. If this possibility exists, it is suggested to use a clamp circuit.

Note 9-2 This rating does not apply to the following pins: All USB DM/DP pins, **XTAL1/CLK_IN**, and **XTALO**

*Stresses exceeding those listed in this section could cause permanent damage to the device. This is a stress rating only. Exposure to absolute maximum rating conditions for extended periods may affect device reliability. Functional operation of the device at any condition exceeding those indicated in Section 9.2, "Operating Conditions**", Section 9.5, "DC Specifications", or any other applicable section of this specification is not implied.

9.2 Operating Conditions**

+3.3 V Supply Voltage (**VDDIO33**, **VDDPLLREF33**) . . . . . +3.0 V to +3.6 V

Input Signal Pins Voltage (Note 9-2) . . . . . -0.3 V to +3.6 V

XTALI/CLK_IN Voltage . . . . . -0.3 V to VDDIO33

USB 2.0 DP/DM Signal Pins Voltage . . . . . -0.3 V to +5.5 V

Ambient Operating Temperature in Still Air (T_A) . . . . . Note 9-3

+3.3 V Supply Voltage Rise Time (T_{RT} in Figure 9-1) . . . . . 400 µs

Note 9-3 0°C to +70°C for commercial version, -40°C to +85°C for industrial version.

**Proper operation of the device is guaranteed only within the ranges specified in this section.

Note: Do not drive input signals without power supplied to the device.

FIGURE 9-1: POWER SUPPLY RISE TIME MODEL

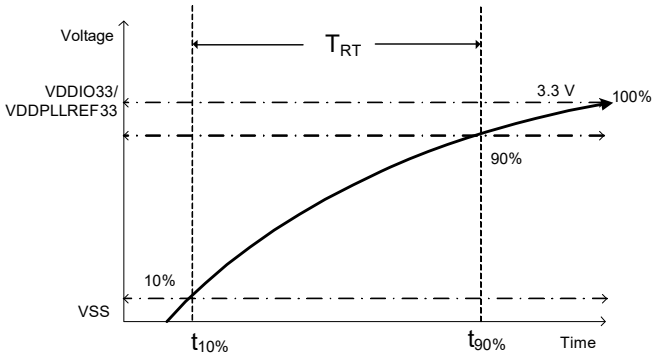

Note:	The rise time for the 3.3V supply can be extended to 100ms max if RESET_N is actively driven low, typically by another IC, until 1 µs after all supplies are within operating range.

9.3 Package Thermal Specifications

TABLE 9-1: PACKAGE THERMAL PARAMETERS

Symbol	°C/W	Velocity (Meters/s)
Θ_{JA}	30	0
	26	1
Ψ_{JT}	0.2	0
	0.3	1
Θ_{JC}	2.6	0
	2.6	1

Note:	Thermal parameters are measured or estimated for devices in a multi-layer 2S2P PCB per JESDN51.

9.4 Power Consumption

This section details the power consumption of the device as measured during various modes of operation. Power dissipation is determined by temperature, supply voltage, and external source/sink requirements.

TABLE 9-2: DEVICE POWER CONSUMPTION

Description	Typical Current (mA)	Maximum Current (mA)
Reset Current (mA)	***TBD***	***TBD***
Suspend Current (mA)	***TBD***	***TBD***
Idle	***TBD***	***TBD***
Active Operation (5 Hi-Speed Devices)	***TBD***	***TBD***
Active Operation (1 Hi-Speed, 1 Full-Speed Device)	***TBD***	***TBD***
Active Operation (2 Hi-Speed, 2 Full-Speed Devices)	***TBD***	***TBD***
Active Operation (2 Hi-Speed, 1 Full-Speed Device)	***TBD***	***TBD***
Active Operation (1 Full-Speed Device)	***TBD***	***TBD***
Active Operation (5 Full-Speed Devices)	***TBD***	***TBD***
Active Operation (1 Hi-Speed Device)	***TBD***	***TBD***
Active Operation (2 Hi-Speed Devices)	***TBD***	***TBD***
Active Operation (3 Hi-Speed Devices)	***TBD***	***TBD***
Active Operation (FlexConnect enabled on 1 port, Hi-Speed data transfer on 5 ports)	***TBD***	***TBD***

© 2024 Microchip Technology Inc. and its subsidiaries

9.5 DC Specifications

TABLE 9-3: I/O DC ELECTRICAL CHARACTERISTICS

Parameter	Symbol	Min	Typical	Max	Units	Notes
I Type Input Buffer						
Low Input Level	V_{IL}	-0.3		0.9	V	
High Input Level	V_{IH}	1.25		**VDDIO33**+0.3	V	
IS Type Input Buffer						
Low Input Level	V_{IL}	-0.3		0.9	V	
High Input Level	V_{IH}	1.25		**VDDIO33**+0.3	V	
Schmitt Trigger Hysteresis (V_{IHT} - V_{ILT})	V_{HYS}	100	160	240	mV	
O4 Type Output Buffer						
Low Output Level	V_{OL}			0.4	V	I_{OL} = 4 mA
High Output Level	V_{OH}	**VDD33**-0.4			V	I_{OH} = -4 mA
O12 Type Output Buffer						
Low Output Level	V_{OL}			0.4	V	I_{OL} = 12 mA
High Output Level	V_{OH}	**VDD33**-0.4			V	I_{OH} = -12 mA
OD12 Type Output Buffer						
Low Output Level	V_{OL}			0.4	V	I_{OL} = 12 mA
ICLK Type Input Buffer (XTALI/CLK_IN Input)						Note 9-4
Low Input Level	V_{IL}	-0.2		0.35	V	
High Input Level	V_{IH}	0.9		VDDIO33	V	
Input Capacitance	C_{IN}			2	pF	
I/O-U Type Buffer (See Note 9-5)						Note 9-5

Note 9-4 **XTALI** can optionally be driven from a 25 MHz singled-ended clock oscillator.

Note 9-5 Refer to the *Universal Serial Bus Revision 2.0 Specification* for USB DC electrical characteristics.

9.6 AC Specifications

This section details the various AC timing specifications of the device.

9.6.1 POWER SUPPLY AND RESET_N SEQUENCE TIMING

Figure 9-2 illustrates the recommended power supply sequencing and timing for the device. **RESET_N** and/or **VBUS_DET** should rise after or at the same rate as **VDDIO33/VDDPLLREF33**. **VBUS_DET** and **RESET_N** do not have any other timing dependencies.

FIGURE 9-2: POWER SUPPLY AND RESET_N SEQUENCE TIMING

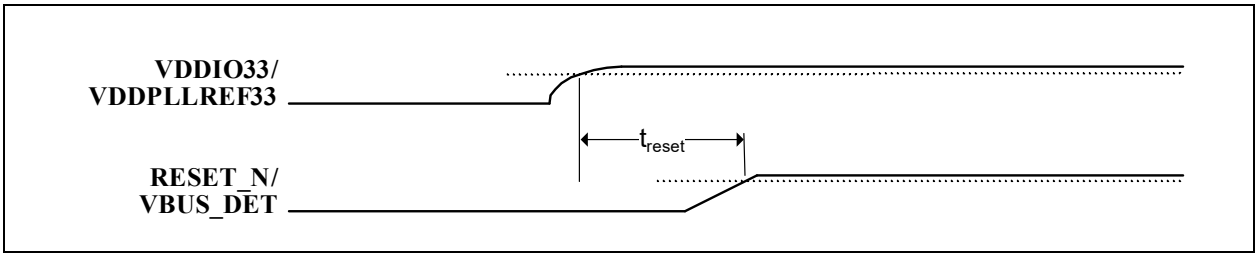

TABLE 9-4: POWER SUPPLY AND RESET_N SEQUENCE TIMING

Symbol	Description	Min	Typ	Max	Units
t_{reset}	**VDDIO33/VDDPLLREF33** to **RESET_N/VBUS_DET** rise time	0			ms

9.6.2 POWER-ON AND CONFIGURATION STRAP TIMING

Figure 9-3 illustrates the configuration strap valid timing requirements in relation to power-on, for applications where **RESET_N** is not used at power-on. In order for valid configuration strap values to be read at power-on, the following timing requirements must be met. The operational levels (V_{opp}) for the external power supplies are detailed in Section 9.2, "Operating Conditions**," on page 31.

FIGURE 9-3: POWER-ON CONFIGURATION STRAP VALID TIMING

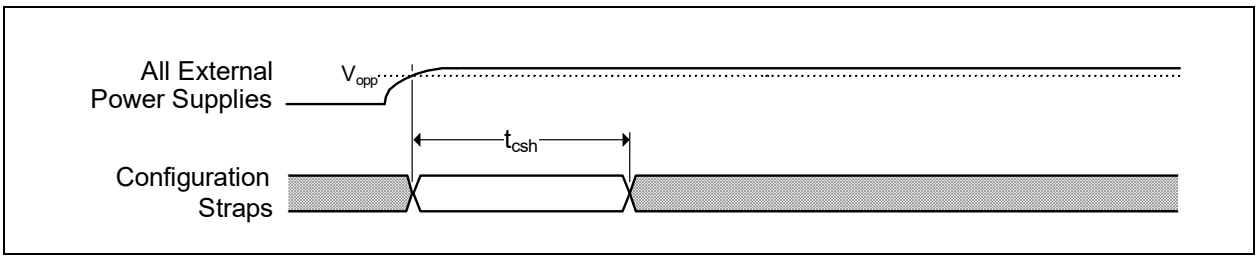

TABLE 9-5: POWER-ON CONFIGURATION STRAP LATCHING TIMING

Symbol	Description	Min	Typ	Max	Units
t_{csh}	Configuration strap hold after external power supplies at operational levels	1			ms

Device configuration straps are also latched as a result of **RESET_N** assertion. Refer to Section 9.6.3, "Reset and Configuration Strap Timing" for additional details.

© 2024 Microchip Technology Inc. and its subsidiaries

9.6.3 RESET AND CONFIGURATION STRAP TIMING

Figure 9-4 illustrates the **RESET_N** pin timing requirements and its relation to the configuration strap pins. Assertion of **RESET_N** is not a requirement. However, if used, it must be asserted for the minimum period specified. Refer to Section 8.8, "Resets" for additional information on resets. Refer to Section 3.3, "Configuration Straps and Programmable Functions" for additional information on configuration straps.

FIGURE 9-4: RESET_N CONFIGURATION STRAP TIMING

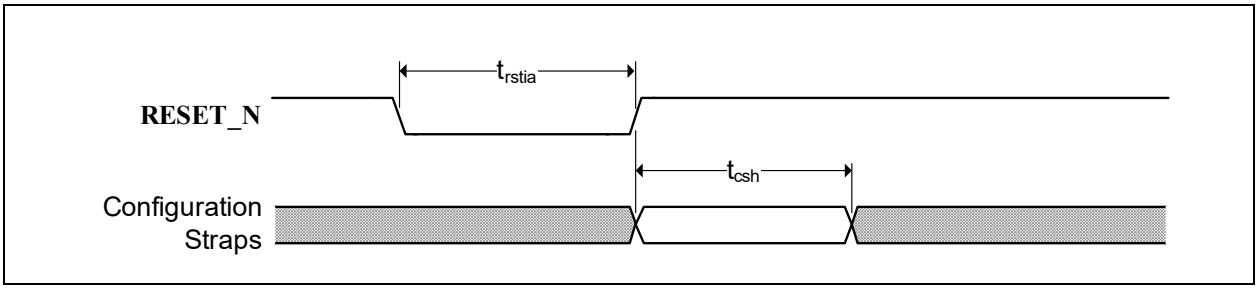

TABLE 9-6: RESET_N CONFIGURATION STRAP TIMING

Symbol	Description	Min	Typ	Max	Units
t_{rstia}	**RESET_N** input assertion time	5			µs
t_{csh}	Configuration strap pins hold after **RESET_N** deassertion	1			ms

Note: The clock input must be stable prior to **RESET_N** deassertion.

Configuration strap latching and output drive timings shown assume that the Power-On reset has finished first otherwise the timings in Section 9.6.2, "Power-On and Configuration Strap Timing" apply.

9.6.4 USB TIMING

All device USB signals conform to the voltage, power, and timing characteristics/specifications as set forth in the *Universal Serial Bus 2.0 Specification*. Please refer to the *Universal Serial Bus Revision 2.0 Specification*, available at http://www.usb.org/developers/docs/usb20_docs/.

9.6.5 SMBUS TIMING

All device SMBus signals conform to the voltage, power, and timing characteristics/specifications as set forth in the *System Management Bus Specification.* Please refer to the *System Management Bus Specification*, Version 1.0, available at http://smbus.org/specs.

9.6.6 I^2C TIMING

All device I^2C signals conform to the 400KHz Fast Mode (Fm) voltage, power, and timing characteristics/specifications as set forth in the *I^2C-Bus Specification*. Please refer to the *I^2C-Bus Specification*, available at http://www.nxp.com/documents/user_manual/UM10204.pdf.

9.6.7 SPI/SQI TIMING

This section specifies the SPI/SQI timing requirements for the device.

FIGURE 9-5: SPI/SQI TIMING

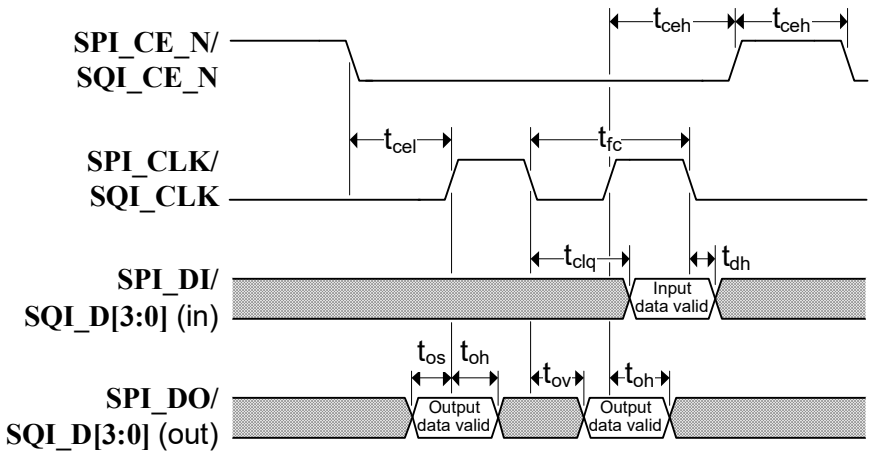

TABLE 9-7: SPI/SQI TIMING (30 MHZ OPERATION)

Symbol	Description	Min	Typ	Max	Units
t_{fc}	Clock frequency			30	MHz
t_{ceh}	Chip enable (**SPI_CE_N/SQI_CE_N**) high time	100			ns
t_{clq}	Clock to input data			13	ns
t_{dh}	Input data hold time	0			ns
t_{os}	Output setup time	5			ns
t_{oh}	Output hold time	5			ns
t_{ov}	Clock to output valid	4			ns
t_{cel}	Chip enable (**SPI_CE_N/SQI_CE_N**) low to first clock	12			ns
t_{ceh}	Last clock to chip enable (**SPI_CE_N/SQI_CE_N**) high	12			ns

TABLE 9-8: SPI/SQI TIMING (60 MHZ OPERATION)

Symbol	Description	Min	Typ	Max	Units
t_{fc}	Clock frequency			60	MHz
t_{ceh}	Chip enable (**SPI_CE_N/SQI_CE_N**) high time	50			ns
t_{clq}	Clock to input data			9	ns
t_{dh}	Input data hold time	0			ns
t_{os}	Output setup time	5			ns
t_{oh}	Output hold time	5			ns
t_{ov}	Clock to output valid	4			ns
t_{cel}	Chip enable (**SPI_CE_N/SQI_CE_N**) low to first clock	12			ns
t_{ceh}	Last clock to chip enable (**SPI_CE_N/SQI_CE_N**) high	12			ns

© 2024 Microchip Technology Inc. and its subsidiaries

9.7 Clock Specifications

The device can accept either a 25MHz crystal or a 25MHz single-ended clock oscillator input. If the single-ended clock oscillator method is implemented, **XTALO** should be left unconnected and **XTALI/CLK_IN** should be driven with a nominal 0-3.3V clock signal. The input clock duty cycle is 40% minimum, 50% typical and 60% maximum.

It is recommended that a crystal utilizing matching parallel load capacitors be used for the crystal input/output signals (**XTALI/XTALO**). The following circuit design (Figure 9-6) and specifications (Table 9-9) are required to ensure proper operation.

FIGURE 9-6: 25MHZ CRYSTAL CIRCUIT

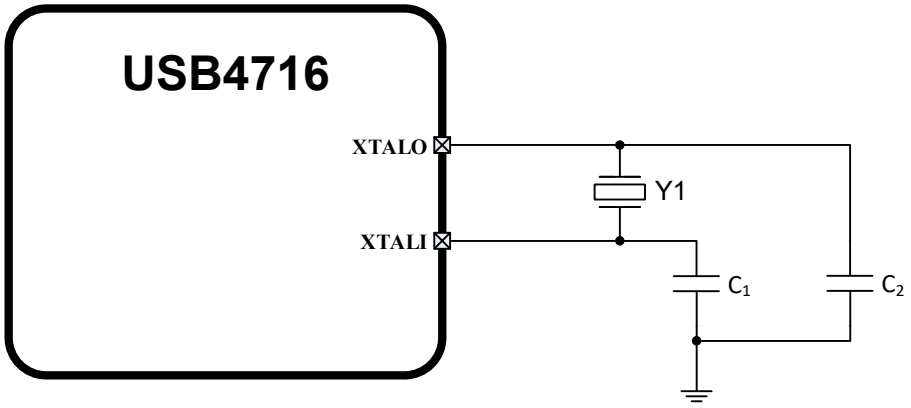

9.7.1 CRYSTAL SPECIFICATIONS

It is recommended that a crystal utilizing matching parallel load capacitors be used for the crystal input/output signals (**XTALI/XTALO**). Refer to Table 9-9 for the recommended crystal specifications.

TABLE 9-9: CRYSTAL SPECIFICATIONS

Parameter	Symbol	Min	Nom	Max	Units	Notes
Crystal Cut	AT, typ					
Crystal Oscillation Mode	Fundamental Mode					
Crystal Calibration Mode	Parallel Resonant Mode					
Frequency	F_{fund}	-	25.000	-	MHz	
Frequency Tolerance @ 25°C	F_{tol}	-	-	±50	PPM	
Frequency Stability Over Temp	F_{temp}	-	-	±50	PPM	
Frequency Deviation Over Time	F_{age}	-	±3 to 5	-	PPM	Note 9-6
Total Allowable PPM Budget		-	-	±100	PPM	
Shunt Capacitance	C_O	-	7 typ	-	pF	
Load Capacitance	C_L	-	20 typ	-	pF	
Drive Level	P_W	100	-	-	uW	
Equivalent Series Resistance	R_1	-	-	50	Ω	
Operating Temperature Range		Note 9-7	-	Note 9-8	°C	
XTALI/CLK_IN Pin Capacitance		-	3 typ	-	pF	Note 9-9
XTALO Pin Capacitance		-	3 typ	-	pF	Note 9-9

Note 9-6 Frequency Deviation Over Time is also referred to as Aging.

Note 9-7 0 °C for commercial version, -40 °C for industrial.

Note 9-8 +70 °C for commercial version, +85 °C for industrial.

Note 9-9 This number includes the pad, the bond wire and the lead frame. PCB capacitance is not included in this value. The **XTALI/CLK_IN** pin, **XTALO** pin and PCB capacitance values are required to accurately calculate the value of the two external load capacitors. These two external load capacitors determine the accuracy of the 25.000 MHz frequency.

9.7.2 EXTERNAL REFERENCE CLOCK (CLK_IN)

When using an external reference clock, the following input clock specifications are suggested:

- 25 MHz
- 50% duty cycle ±10%, ±100 ppm
- Jitter < 100 ps RMS

© 2024 Microchip Technology Inc. and its subsidiaries

10.0 PACKAGE INFORMATION

Note: Package offerings are currently under review and are subject to change.

56-VQFN (7x7 mm)

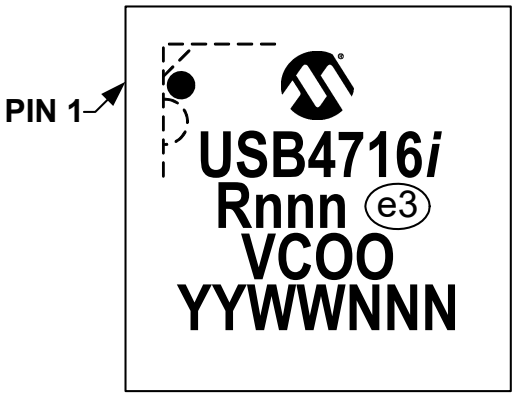

Legend:	*i*	Temperature range designator (Blank = commercial, *i* = industrial)
	R	Product revision
	nnn	Internal code
	e3	Pb-free JEDEC® designator for Matte Tin (Sn)
	V	Plant of assembly
	COO	Country of origin
	YY	Year code (last two digits of calendar year)
	WW	Week code (week of January 1 is week ‘01’)
	NNN	Alphanumeric traceability code

Note: In the event the full Microchip part number cannot be marked on one line, it will be carried over to the next line, thus limiting the number of available characters for customer-specific information.

* Standard device marking consists of Microchip part number, year code, week code and traceability code. For device marking beyond this, certain price adders apply. Please check with your Microchip Sales Office. For QTP devices, any special marking adders are included in QTP price.

10.1 56-VQFN

FIGURE 10-1: 56-VQFN PACKAGE (DRAWING & DIMENSIONS)

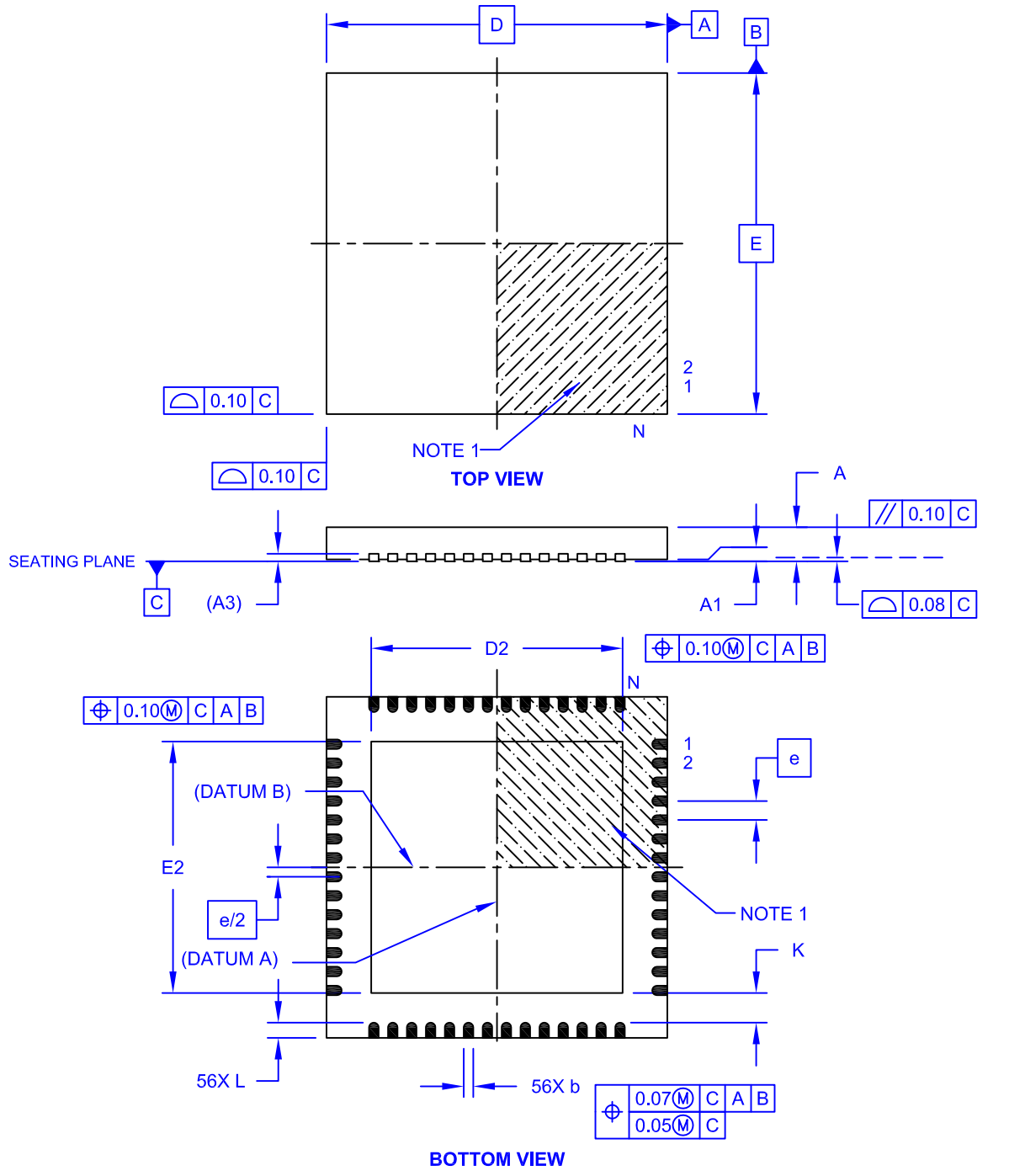

Microchip Technology Drawing C04-324A Sheet 1 of 2

© 2024 Microchip Technology Inc. and its subsidiaries

FIGURE 10-1: 56-VQFN PACKAGE (DRAWING & DIMENSIONS) (CONTINUED)

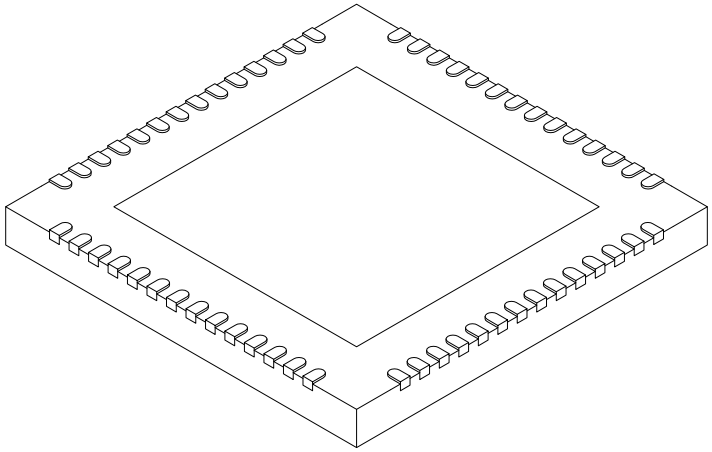

Units		MILLIMETERS		
Dimension Limits		MIN	NOM	MAX
Number of Pins	N	56		
Pitch	e	0.40 BSC		
Overall Height	A	0.80	0.90	1.00
Standoff	A1	0.00	0.02	0.05
Contact Thickness	A3	0.20 REF		
Overall Width	E	7.00 BSC		
Exposed Pad Width	E2	4.50	4.60	4.70
Overall Length	D	7.00 BSC		
Exposed Pad Length	D2	4.50	4.60	4.70
Contact Width	b	0.15	0.20	0.25
Contact Length	L	0.30	0.40	0.50
Contact-to-Exposed Pad	K	0.70	0.80	-

Notes:

1. Pin 1 visual index feature may vary, but must be located within the hatched area.
2. Package is saw singulated.
3. Dimensioning and tolerancing per ASME Y14.5M.
   BSC: Basic Dimension. Theoretically exact value shown without tolerances.
   REF: Reference Dimension, usually without tolerance, for information purposes only.

Microchip Technology Drawing C04-324A Sheet 2 of 2

APPENDIX A: DATA SHEET REVISION HISTORY

TABLE A-1: REVISION HISTORY

Revision Level & Date	Section/Figure/Entry	Correction
DS00005552B (11-22-24)		First public document release
DS00005552A (10-14-24)	All	Initial Release

PRODUCT IDENTIFICATION SYSTEM

To order or obtain information, e.g., on pricing or delivery, refer to the factory or the listed sales office.

PART NO.	[X](1)	-	X	/	XXX
Device	Tape and Reel Option		Temperature Range		Package

Device:	USB4716= 5 Downstream Ports, 1 Upstream Port
Tape and Reel Option:	Blank = Standard packaging (tray) T = Tape and Reel (Note 1)
Temperature Range:	Blank = 0°C to +70°C (Commercial) I = -40°C to +85°C (Industrial))
Package:	2GX = 56-pin VQFN

Examples:

a) USB4716/2GX
Tray, commercial 0°C to +70°C,
56-pin VQFN

b) USB4716T/2GX
Tape & reel, commercial 0°C to +70°C,
56-pin VQFN

c) USB4716-I/2GX
Tray, industrial -40°C to+85°C,
56-pin VQFN

d) USB4716T-I/2GX
Tape & reel, industrial -40°C to+85°C,
56-pin VQFN

Note 1: Tape and Reel identifier only appears in the catalog part number description. This identifier is used for ordering purposes and is not printed on the device package. Check with your Microchip Sales Office for package availability with the Tape and Reel option.

© 2024 Microchip Technology Inc. and its subsidiaries

THE MICROCHIP WEB SITE

Microchip provides online support via our WWW site at www.microchip.com. This web site is used as a means to make files and information easily available to customers. Accessible by using your favorite Internet browser, the web site contains the following information:

- **Product Support** – Data sheets and errata, application notes and sample programs, design resources, user's guides and hardware support documents, latest software releases and archived software
- **General Technical Support** – Frequently Asked Questions (FAQ), technical support requests, online discussion groups, Microchip consultant program member listing
- **Business of Microchip** – Product selector and ordering guides, latest Microchip press releases, listing of seminars and events, listings of Microchip sales offices, distributors and factory representatives

CUSTOMER CHANGE NOTIFICATION SERVICE

Microchip's customer notification service helps keep customers current on Microchip products. Subscribers will receive e-mail notification whenever there are changes, updates, revisions or errata related to a specified product family or development tool of interest.

To register, access the Microchip web site at www.microchip.com. Under "Support", click on "Customer Change Notification" and follow the registration instructions.

CUSTOMER SUPPORT

Users of Microchip products can receive assistance through several channels:

- Distributor or Representative
- Local Sales Office
- Field Application Engineer (FAE)
- Technical Support

Customers should contact their distributor, representative or field application engineer (FAE) for support. Local sales offices are also available to help customers. A listing of sales offices and locations is included in the back of this document.

Technical support is available through the web site at: http://microchip.com/support

Microchip Information

Trademarks

The “Microchip” name and logo, the “M” logo, and other names, logos, and brands are registered and unregistered trademarks of Microchip Technology Incorporated or its affiliates and/or subsidiaries in the United States and/or other countries (“Microchip Trademarks”). Information regarding Microchip Trademarks can be found at https://www.microchip.com/en-us/about/legalinformation/microchip-trademarks.

ISBN: 979-8-3371-0133-0

Legal Notice

This publication and the information herein may be used only with Microchip products, including to design, test, and integrate Microchip products with your application. Use of this information in any other manner violates these terms. Information regarding device applications is provided only for your convenience and may be superseded by updates. It is your responsibility to ensure that your application meets with your specifications. Contact your local Microchip sales office for additional support or, obtain additional support at www.microchip.com/en-us/support/design-help/client-support-services.

THIS INFORMATION IS PROVIDED BY MICROCHIP "AS IS". MICROCHIP MAKES NO REPRESENTATIONS OR WARRANTIES OF ANY KIND WHETHER EXPRESS OR IMPLIED, WRITTEN OR ORAL, STATUTORY OR OTHERWISE, RELATED TO THE INFORMATION INCLUDING BUT NOT LIMITED TO ANY IMPLIED WARRANTIES OF NON-INFRINGEMENT, MERCHANTABILITY, AND FITNESS FOR A PARTICULAR PURPOSE, OR WARRANTIES RELATED TO ITS CONDITION, QUALITY, OR PERFORMANCE.

IN NO EVENT WILL MICROCHIP BE LIABLE FOR ANY INDIRECT, SPECIAL, PUNITIVE, INCIDENTAL, OR CONSEQUENTIAL LOSS, DAMAGE, COST, OR EXPENSE OF ANY KIND WHATSOEVER RELATED TO THE INFORMATION OR ITS USE, HOWEVER CAUSED, EVEN IF MICROCHIP HAS BEEN ADVISED OF THE POSSIBILITY OR THE DAMAGES ARE FORESEEABLE. TO THE FULLEST EXTENT ALLOWED BY LAW, MICROCHIP'S TOTAL LIABILITY ON ALL CLAIMS IN ANY WAY RELATED TO THE INFORMATION OR ITS USE WILL NOT EXCEED THE AMOUNT OF FEES, IF ANY, THAT YOU HAVE PAID DIRECTLY TO MICROCHIP FOR THE INFORMATION.

Use of Microchip devices in life support and/or safety applications is entirely at the buyer's risk, and the buyer agrees to defend, indemnify and hold harmless Microchip from any and all damages, claims, suits, or expenses resulting from such use. No licenses are conveyed, implicitly or otherwise, under any Microchip intellectual property rights unless otherwise stated.

Microchip Devices Code Protection Feature

Note the following details of the code protection feature on Microchip products:

- Microchip products meet the specifications contained in their particular Microchip Data Sheet.
- Microchip believes that its family of products is secure when used in the intended manner, within operating specifications, and under normal conditions.
- Microchip values and aggressively protects its intellectual property rights. Attempts to breach the code protection features of Microchip product is strictly prohibited and may violate the Digital Millennium Copyright Act.
- Neither Microchip nor any other semiconductor manufacturer can guarantee the security of its code. Code protection does not mean that we are guaranteeing the product is “unbreakable”. Code protection is constantly evolving. Microchip is committed to continuously improving the code protection features of our products.

© 2024 Microchip Technology Inc. and its subsidiaries