VT-860A

Temperature Compensated Crystal Oscillator

Features

- 13.000 MHz to 52.000 MHz Output
- ±2.5 ppm Temperature Stability over –40°C to +85°C
- Frequency Tuning Option
- Fundamental Crystal Design
- Gold over Nickel Contact Pads
- Hermetically Sealed Ceramic 2.0 mm x 1.6 mm SMD Package
- Product is Compliant to RoHS Directive and Fully Compatible with Lead-Free Assembly

Applications

- GPS
- WiLAN, WiMAX
- IoT
- Point-to-Point Radio
- Manpack Radio

General Description

Microchip's VT-860A temperature compensated crystal oscillator (TCXO) is a quartz stabilized, clipped sine wave output, analog temperature compensated oscillator that operates off a 1.8V, 2.8V, 3.0V, or 3.3V supply in a hermetically sealed 2.0 mm x 1.6 mm ceramic package.

Block Diagram

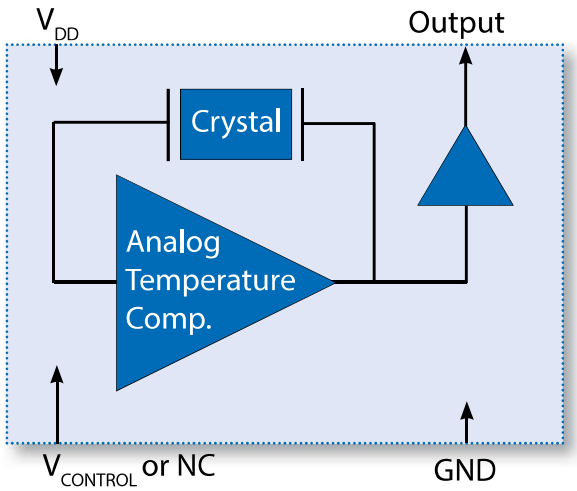

© 2022 Microchip Technology Inc. and its subsidiaries

1.0 ELECTRICAL CHARACTERISTICS

Absolute Maximum Ratings †

Supply Voltage (V_{DD}) ..... –0.3V to +4.6V
Maximum Control Voltage (V_C, Note 2) ..... –0.3V to V_{DD} + 0.3V
ESD Rating, Human Body Model (Note 1) ..... 1.5 kV
ESD Rating, Charged Device Model (Note 1) 750V
Storage Temperature (T_S) ..... –40°C to +85°C

† Notice: Stresses in excess of the Absolute Maximum Ratings can permanently damage the device. Functional operation is not implied at these or any other conditions in excess of conditions represented in the operational sections of this data sheet. Exposure to Absolute Maximum Ratings for extended periods may adversely affect device reliability.

Note 1: Although ESD protection circuitry has been designed into the VT-860A, proper precautions should be taken when handling and mounting. Microchip employs a Human Body Model (HBM) and a Charged Device Model (CDM) for ESD susceptibility testing and design protection evaluation. ESD thresholds are dependent on the circuit parameters used to define the model. Although no industry standard has been adopted for the CDM, a standard resistance of 1.5 kΩ and capacitance of 100 pF is widely used and therefore can be used for comparison purposes.

2: The maximum rating is (V_{DD} + 0.3V) up to 4.6V.

ELECTRICAL CHARACTERISTICS

Parameter	Sym.	Min.	Typ.	Max.	Units	Conditions
Output Frequency, Note 1	f_O	13	—	52	MHz	Ordering Option
Supply Voltage, Note 2	V_{DD}	—	1.8	—	V	Ordering Option
		—	2.5	—		
		—	2.8	—		
		—	3.0	—		
		—	3.3	—		
Supply Current, Note 3	I_{DD}	—	—	2.0	mA	f_O ≤ 26 MHz
		—	—	2.5		f_O > 26 MHz
Operating Temperature	T_{OP}	–30	—	+85	°C	Ordering Option
		–40	—	+85		
Frequency Stability						
Stability over Operating Temperature, Note 4	f_{STAB}	—	—	±0.5	ppm	Ordering Option
		—	—	±1.0		
		—	—	±2.5		
Frequency Tolerance, Note 5	f_{TOL}	—	—	±1.5	ppm	—
Power Supply Stability ±5%	f_{PWR}	—	—	±0.2	ppm	—

Note 1: The output is DC-coupled. Refer to the Standard Frequencies table in the Product Identification System section.

2: The VT-860A power supply pin (Pin 4) should be filtered using a bypass capacitor, such as 0.01 µF for optimal performance.

3: No load.

4: Referenced to the midpoint between the minimum and maximum frequency value over the operating temperature range.

5: Frequency measured at +25°C, two hours after two IR reflows.

6: Referenced to Mid Control Voltage and over the operating temperature.

7: Measured at room ambient temperature using an Agilent E5052B Signal Source Analyzer or equivalent.

© 2022 Microchip Technology Inc. and its subsidiaries

ELECTRICAL CHARACTERISTICS (CONTINUED)

Parameter	Sym.	Min.	Typ.	Max.	Units	Conditions
Load Stability ±10%	f_{LOAD}	—	—	±0.2	ppm	—
Static Hysteresis	HYS	—	—	±0.6	ppm	—
Aging	f_{AGE}	—	—	±1.0	ppm	1st Year at +25°C
Frequency Tuning (EFC), *Ordering Option*						
Tuning Pull Range, Note 6	TPR	±5	—	—	ppm	Ordering Option
		±10	—	—		
Tuning Slope	—	Positive			—	—
Control Voltage to Reach Pull Range	V_C	0.3	0.9	1.5	V	1.8V Supply Voltage
		0.5	1.5	2.5	V	2.5V, 2.8V, 3.0V, and 3.3V Supply Voltage
Linearity	Lin	—	—	10	%	—
Control Voltage Impedance	—	500	—	—	kΩ	—
RF Output, Clipped Sine Wave						
Output Level	V_{OP-P}	0.8	—	—	V	—
Output Load	—	—	10k || 10pF	—	—	—
Duty Cycle	SYM	40	—	60	%	—
Start-Up Time	t_{SU}	—	—	2	ms	—
Phase Noise						
Phase Noise, 10 Hz	$Ø_N$	—	–95	—	dBc/Hz	26.00 MHz, Note 7
Phase Noise, 100 Hz		—	–118	—		
Phase Noise, 1 kHz		—	–140	—		
Phase Noise, 10 kHz		—	–152	—		
Phase Noise, 100 kHz		—	–158	—		
Integrated Phase Jitter, Note 6	$Ø_J$	—	0.3	—	ps	26.00 MHz (12 kHz to 5 MHz)

Note 1: The output is DC-coupled. Refer to the Standard Frequencies table in the Product Identification System section.

2: The VT-860A power supply pin (Pin 4) should be filtered using a bypass capacitor, such as 0.01 µF for optimal performance.

3: No load.

4: Referenced to the midpoint between the minimum and maximum frequency value over the operating temperature range.

5: Frequency measured at +25°C, two hours after two IR reflows.

6: Referenced to Mid Control Voltage and over the operating temperature.

7: Measured at room ambient temperature using an Agilent E5052B Signal Source Analyzer or equivalent.

© 2022 Microchip Technology Inc. and its subsidiaries

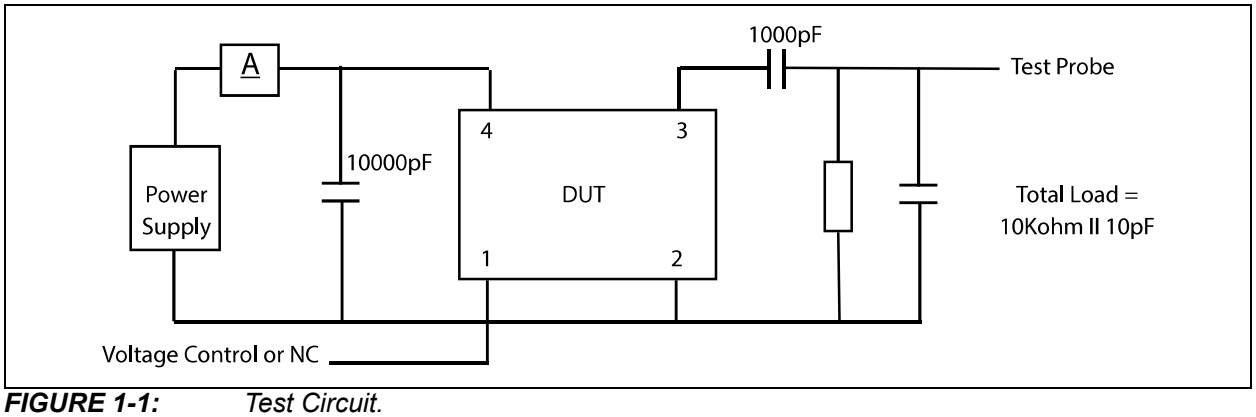

FIGURE 1-1: *Test Circuit.*

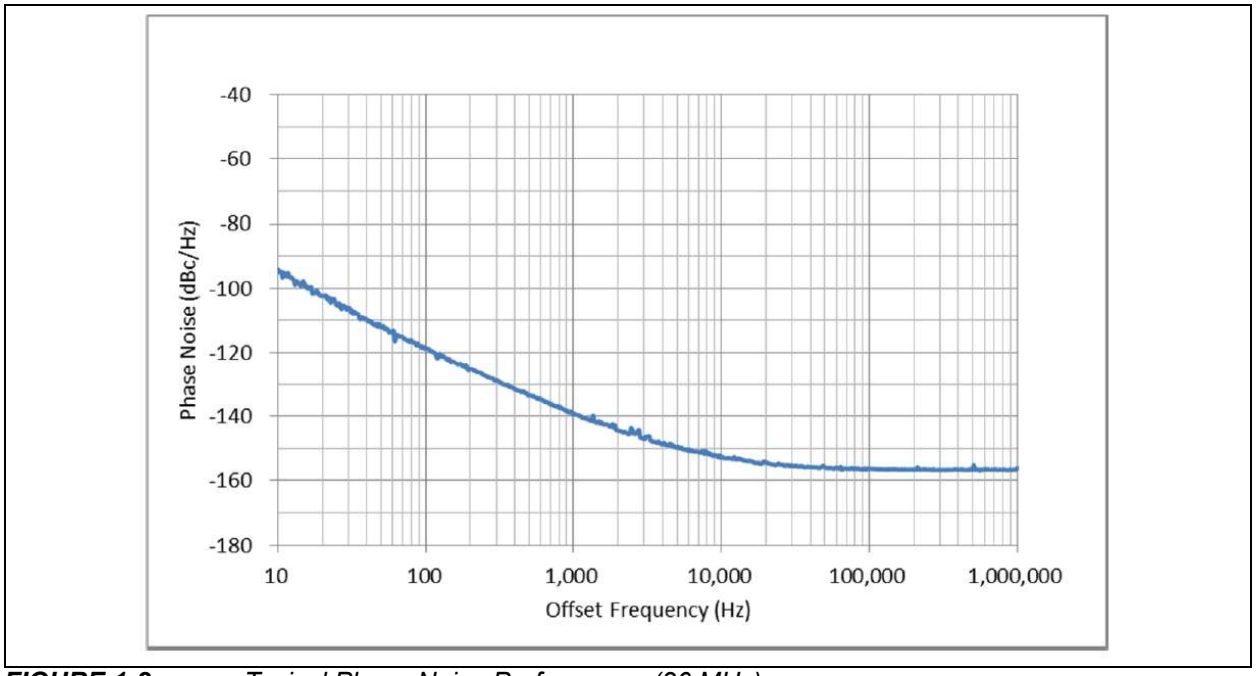

FIGURE 1-2: *Typical Phase Noise Performance (26 MHz).*

© 2022 Microchip Technology Inc. and its subsidiaries

2.0 PIN DESCRIPTIONS

The descriptions of the pins are listed in Table 2-1.

TABLE 2-1: PIN FUNCTION TABLE

Pin Number	Pin Name	Description
1	V_C or NC	Voltage controlled frequency tuning or No connection.
2	GND	Ground.
3	OUT	RF output.
4	V_{DD}	Supply voltage.

Note 1: 0.01 µF capacitor is a bypass power supply filter capacitor placed between V_{DD} (Pin 4) and GND for optimal performance.

3.0 RELIABILITY

Microchip qualification will include aging at various extreme temperatures, shock and vibration, temperature cycling, and IR reflow simulation. The VT-860A is capable of meeting the following qualification tests.

TABLE 3-1: ENVIRONMENTAL COMPLIANCE

Parameter	Conditions
Mechanical Shock	IEC 60068-2-6
Mechanical Vibration	IEC 60068-2-27
Drop Test	EUAJ-ED-4702C, Method 5
Thermal Shock	IEC 60068-2-14
Solderability	IEC 60068-2-58
High Temperature Storage	IEC 60068-2-2 Bb
Low Temperature Storage	IEC 60068-2-1 Ab
Humidity	IEC 60068-2-78
Moisture Sensitivity Level	MSL 1
Contact Pads	Gold (0.3 µm min. to 1.0 µm max.) over Nickel
Weight	15 mg

4.0 IR REFLOW

Devices are built using lead-free epoxy and can be subjected to standard lead-free IR reflow conditions shown in Table 4-1. Contact pads are gold over nickel and lower maximum temperatures can also be used, such as 220°C.

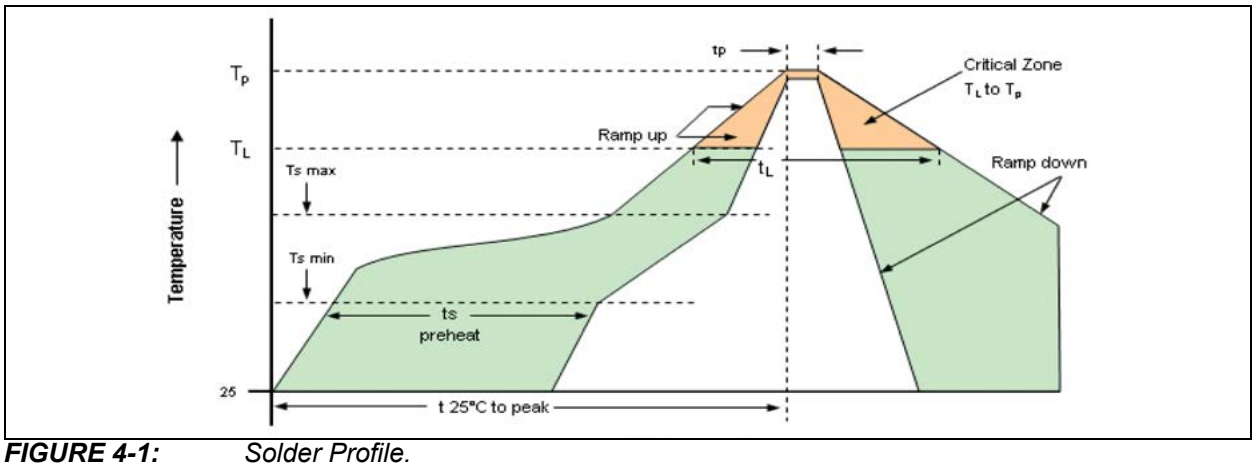

FIGURE 4-1: *Solder Profile.*

TABLE 4-1: REFLOW PROFILE

Parameter	Symbol	Value
Pre-Heat Time	t_S	200 seconds maximum
Ramp Up	R_{UP}	3°C/sec. maximum
Time above 217°C	t_L	150 seconds maximum
Time to Peak Temperature	T_{AMB-P}	480 seconds maximum
Time at 260°C	t_P	10 seconds maximum
Time at 240°C	t_{P2}	60 seconds maximum
Ramp Down	R_{DN}	6°C/sec. maximum

© 2022 Microchip Technology Inc. and its subsidiaries

5.0 TAPE AND REEL

TABLE 5-1: TAPE AND REEL DIMENSIONS

Tape Dimensions (mm)						Reel Dimensions (mm)							
Dimension	W	F	Do	Po	P1	A	B	C	D	N	W1	W2	# per Reel
Tolerance	Typ	Typ	Typ	Typ	Typ	Typ	Typ	Typ	Typ	Typ	Typ	Max	
VT-860A	8	3.5	1.55	4	4	180	2.0	13	20.2	60	9.0	11.4	3000

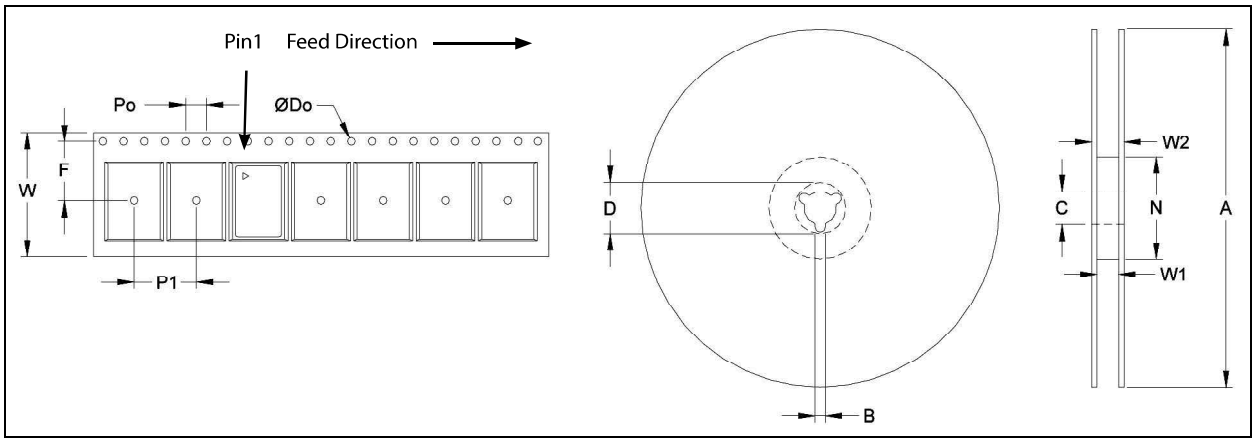

6.0 PACKAGING INFORMATION

4-Lead 2.0 mm x 1.6 mm VDFN Package Outline and Recommended Land Pattern

Note: For the most current package drawings, please see the Microchip Packaging Specification located at http://www.microchip.com/packaging

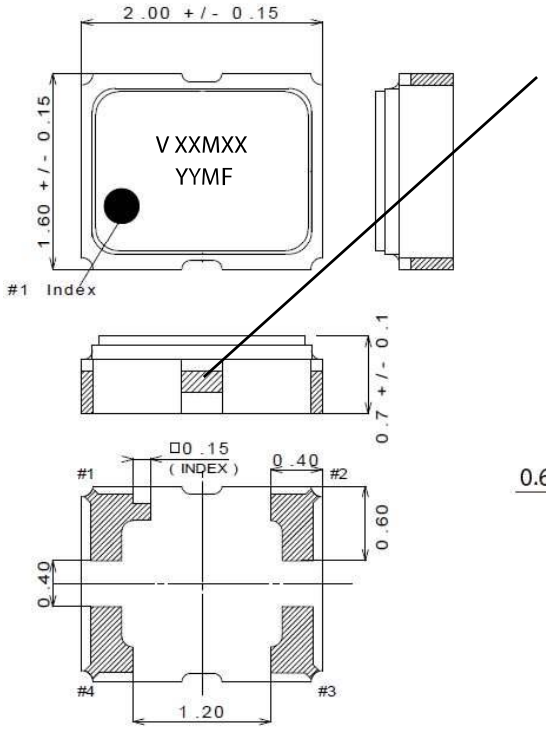

Note: Side pads are Do Not Connect.

Marking Information

V = Vectron
XXMXX = Frequency (Example: 26M000)
YY = Year of Manufacture
M = Month of the Year (M = A-Jan, B-Feb.....K-Nov, L-Dec)
F = Manufacturing Location
• = Pin 1 Indicator

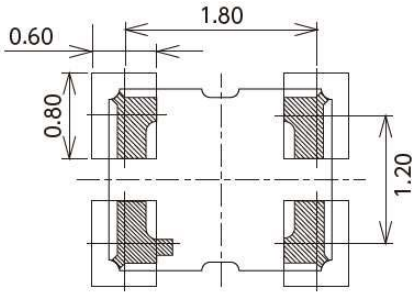

Dimensions in mm
Dimensions are ±0.1 unless otherwise noted

© 2022 Microchip Technology Inc. and its subsidiaries

APPENDIX A: REVISION HISTORY

Revision A (March 2022)

- Converted Vectron document VT-860A to Microchip data sheet template DS20006648A.
- Minor grammatical text changes throughout.

Revision B (June 2022)

- Corrections to the Electrical Characteristics table.
- Minor text corrections where needed.
- Added note to the 4-Lead 2.0 mm x 1.6 mm VDFN Package Outline and Recommended Land Pattern image.

© 2022 Microchip Technology Inc. and its subsidiaries

NOTES:

© 2022 Microchip Technology Inc. and its subsidiaries

PRODUCT IDENTIFICATION SYSTEM

To order or obtain information, e.g., on pricing or delivery, contact your local Microchip representative or sales office.

Device	-X	X	X	-XXX	X	-XXXXXXXXXX	XX
Part No.	Power Supply	Output	Temp. Range	Stability	Tuning	Frequency	Packaging

Device:	VT-860A:	Temperature Compensated Crystal Oscillator in a 2.0 mm x 1.6 mm VDFN
Power Supply:	E =	3.3VDC ±10%
	F =	3.0VDC ±10%
	H =	2.5VDC ±10%
	G =	2.8VDC ±10%
	J =	1.8VDC ±10%
Output:	F =	Clipped Sine Wave
Temperature Range:	E =	–40°C to +85°C
	H =	–30°C to +85°C
Stability:	507 =	±0.5 ppm
	106 =	±1.0 ppm
	256 =	±2.5 ppm
Tuning:	0 =	Fixed, No Tuning
	A =	±5 ppm
	C =	±10 ppm
Frequency:	xxMxxxxxxx=Frequency in MHz	
Packaging:	TR =	3,000/Reel
	<blank>=	Cut Tape/ non-TR quantities

Examples:

a) VT-860A-EFE-1060-24M0000000TR:
VT-860A, 3.3VDC, Clipped Sine Wave Output, –40°C to +85°C Temp Range, ±1.0 ppm Stability, Fixed, No Tuning, 24.000 MHz, 3000/Reel

b) VT-860A-FFH-507C-37M4000000:
VT-860A, 3.0VDC, Clipped Sine Wave Output, –30°C to +85°C Temp Range, ±0.5 ppm Stability, ±10 ppm Tuning, 37.400 MHz, Cut Tape

Note 1: Tape and Reel identifier only appears in the catalog part number description. This identifier is used for ordering purposes and is not printed on the device package. Check with your Microchip Sales Office for package availability with the Tape and Reel option.

TABLE 1: STANDARD FREQUENCIES

16.384 MHz	16.368 MHz	16.369 MHz	19.200 MHz	20.000 MHz	24.000 MHz
26.000 MHz	32.000 MHz	33.600 MHz	37.400 MHz	38.400 MHz	40.000 MHz
48.000 MHz	52.000 MHz	—	—	—	—

© 2022 Microchip Technology Inc. and its subsidiaries

NOTES:

© 2022 Microchip Technology Inc. and its subsidiaries

Note the following details of the code protection feature on Microchip products:

- Microchip products meet the specifications contained in their particular Microchip Data Sheet.
- Microchip believes that its family of products is secure when used in the intended manner, within operating specifications, and under normal conditions.
- Microchip values and aggressively protects its intellectual property rights. Attempts to breach the code protection features of Microchip product is strictly prohibited and may violate the Digital Millennium Copyright Act.
- Neither Microchip nor any other semiconductor manufacturer can guarantee the security of its code. Code protection does not mean that we are guaranteeing the product is "unbreakable" Code protection is constantly evolving. Microchip is committed to continuously improving the code protection features of our products.

This publication and the information herein may be used only with Microchip products, including to design, test, and integrate Microchip products with your application. Use of this information in any other manner violates these terms. Information regarding device applications is provided only for your convenience and may be superseded by updates. It is your responsibility to ensure that your application meets with your specifications. Contact your local Microchip sales office for additional support or, obtain additional support at https://www.microchip.com/en-us/support/design-help/client-support-services.

THIS INFORMATION IS PROVIDED BY MICROCHIP "AS IS". MICROCHIP MAKES NO REPRESENTATIONS OR WARRANTIES OF ANY KIND WHETHER EXPRESS OR IMPLIED, WRITTEN OR ORAL, STATUTORY OR OTHERWISE, RELATED TO THE INFORMATION INCLUDING BUT NOT LIMITED TO ANY IMPLIED WARRANTIES OF NON-INFRINGEMENT, MERCHANTABILITY, AND FITNESS FOR A PARTICULAR PURPOSE, OR WARRANTIES RELATED TO ITS CONDITION, QUALITY, OR PERFORMANCE.

IN NO EVENT WILL MICROCHIP BE LIABLE FOR ANY INDIRECT, SPECIAL, PUNITIVE, INCIDENTAL, OR CONSEQUENTIAL LOSS, DAMAGE, COST, OR EXPENSE OF ANY KIND WHATSOEVER RELATED TO THE INFORMATION OR ITS USE, HOWEVER CAUSED, EVEN IF MICROCHIP HAS BEEN ADVISED OF THE POSSIBILITY OR THE DAMAGES ARE FORESEEABLE. TO THE FULLEST EXTENT ALLOWED BY LAW, MICROCHIP'S TOTAL LIABILITY ON ALL CLAIMS IN ANY WAY RELATED TO THE INFORMATION OR ITS USE WILL NOT EXCEED THE AMOUNT OF FEES, IF ANY, THAT YOU HAVE PAID DIRECTLY TO MICROCHIP FOR THE INFORMATION.

Use of Microchip devices in life support and/or safety applications is entirely at the buyer's risk, and the buyer agrees to defend, indemnify and hold harmless Microchip from any and all damages, claims, suits, or expenses resulting from such use. No licenses are conveyed, implicitly or otherwise, under any Microchip intellectual property rights unless otherwise stated.

For information regarding Microchip's Quality Management Systems, please visit www.microchip.com/quality.

Trademarks

The Microchip name and logo, the Microchip logo, Adaptec, AVR, AVR logo, AVR Freaks, BesTime, BitCloud, CryptoMemory, CryptoRF, dsPIC, flexPWR, HELDO, IGLOO, JukeBlox, KeeLoq, Kleer, LANCheck, LinkMD, maXStylus, maXTouch, MediaLB, megaAVR, Microsemi, Microsemi logo, MOST, MOST logo, MPLAB, OptoLyzer, PIC, picoPower, PICSTART, PIC32 logo, PolarFire, Prochip Designer, QTouch, SAM-BA, SenGenuity, SpyNIC, SST, SST Logo, SuperFlash, Symmetricom, SyncServer, Tachyon, TimeSource, tinyAVR, UNI/O, Vectron, and XMEGA are registered trademarks of Microchip Technology Incorporated in the U.S.A. and other countries.

AgileSwitch, APT, ClockWorks, The Embedded Control Solutions Company, EtherSynch, Flashtec, Hyper Speed Control, HyperLight Load, Libero, motorBench, mTouch, Powermite 3, Precision Edge, ProASIC, ProASIC Plus, ProASIC Plus logo, Quiet- Wire, SmartFusion, SyncWorld, Temux, TimeCesium, TimeHub, TimePictra, TimeProvider, TrueTime, and ZL are registered trademarks of Microchip Technology Incorporated in the U.S.A.

Adjacent Key Suppression, AKS, Analog-for-the-Digital Age, Any Capacitor, AnyIn, AnyOut, Augmented Switching, BlueSky, BodyCom, Clockstudio, CodeGuard, CryptoAuthentication, CryptoAutomotive, CryptoCompanion, CryptoController, dsPICDEM, dsPICDEM.net, Dynamic Average Matching, DAM, ECAN, Espresso T1S, EtherGREEN, GridTime, IdealBridge, In-Circuit Serial Programming, ICSP, INICnet, Intelligent Paralleling, IntelliMOS, Inter-Chip Connectivity, JitterBlocker, Knob-on-Display, KoD, maxCrypto, maxView, memBrain, Mindi, MiWi, MPASM, MPF, MPLAB Certified logo, MPLIB, MPLINK, MultiTRAK, NetDetach, Omniscient Code Generation, PICDEM, PICDEM.net, PICkit, PICtail, PowerSmart, PureSilicon, QMatrix, REAL ICE, Ripple Blocker, RTAX, RTG4, SAM-ICE, Serial Quad I/O, simpleMAP, SimpliPHY, SmartBuffer, SmartHLS, SMART-I.S., storClad, SQI, SuperSwitcher, SuperSwitcher II, Switchtec, SynchroPHY, Total Endurance, Trusted Time, TSHARC, USBCheck, VariSense, VectorBlox, VeriPHY, ViewSpan, WiperLock, XpressConnect, and ZENA are trademarks of Microchip Technology Incorporated in the U.S.A. and other countries.

SQTP is a service mark of Microchip Technology Incorporated in the U.S.A.

The Adaptec logo, Frequency on Demand, Silicon Storage Technology, and Symmcom are registered trademarks of Microchip Technology Inc. in other countries.

GestIC is a registered trademark of Microchip Technology Germany II GmbH & Co. KG, a subsidiary of Microchip Technology Inc., in other countries.

All other trademarks mentioned herein are property of their respective companies.

© 2022, Microchip Technology Incorporated and its subsidiaries.

All Rights Reserved.

ISBN:

Worldwide Sales and Service

AMERICAS

Corporate Office
2355 West Chandler Blvd.
Chandler, AZ 85224-6199
Tel: 480-792-7200
Fax: 480-792-7277
Technical Support:
http://www.microchip.com/support
Web Address:
www.microchip.com

Atlanta
Duluth, GA
Tel: 678-957-9614
Fax: 678-957-1455

Austin, TX
Tel: 512-257-3370

Boston
Westborough, MA
Tel: 774-760-0087
Fax: 774-760-0088

Chicago
Itasca, IL
Tel: 630-285-0071
Fax: 630-285-0075

Dallas
Addison, TX
Tel: 972-818-7423
Fax: 972-818-2924

Detroit
Novi, MI
Tel: 248-848-4000

Houston, TX
Tel: 281-894-5983

Indianapolis
Noblesville, IN
Tel: 317-773-8323
Fax: 317-773-5453
Tel: 317-536-2380

Los Angeles
Mission Viejo, CA
Tel: 949-462-9523
Fax: 949-462-9608
Tel: 951-273-7800

Raleigh, NC
Tel: 919-844-7510

New York, NY
Tel: 631-435-6000

San Jose, CA
Tel: 408-735-9110
Tel: 408-436-4270

Canada - Toronto
Tel: 905-695-1980
Fax: 905-695-2078

ASIA/PACIFIC

Australia - Sydney
Tel: 61-2-9868-6733

China - Beijing
Tel: 86-10-8569-7000

China - Chengdu
Tel: 86-28-8665-5511

China - Chongqing
Tel: 86-23-8980-9588

China - Dongguan
Tel: 86-769-8702-9880

China - Guangzhou
Tel: 86-20-8755-8029

China - Hangzhou
Tel: 86-571-8792-8115

China - Hong Kong SAR
Tel: 852-2943-5100

China - Nanjing
Tel: 86-25-8473-2460

China - Qingdao
Tel: 86-532-8502-7355

China - Shanghai
Tel: 86-21-3326-8000

China - Shenyang
Tel: 86-24-2334-2829

China - Shenzhen
Tel: 86-755-8864-2200

China - Suzhou
Tel: 86-186-6233-1526

China - Wuhan
Tel: 86-27-5980-5300

China - Xian
Tel: 86-29-8833-7252

China - Xiamen
Tel: 86-592-2388138

China - Zhuhai
Tel: 86-756-3210040

ASIA/PACIFIC

India - Bangalore
Tel: 91-80-3090-4444

India - New Delhi
Tel: 91-11-4160-8631

India - Pune
Tel: 91-20-4121-0141

Japan - Osaka
Tel: 81-6-6152-7160

Japan - Tokyo
Tel: 81-3-6880- 3770

Korea - Daegu
Tel: 82-53-744-4301

Korea - Seoul
Tel: 82-2-554-7200

Malaysia - Kuala Lumpur
Tel: 60-3-7651-7906

Malaysia - Penang
Tel: 60-4-227-8870

Philippines - Manila
Tel: 63-2-634-9065

Singapore
Tel: 65-6334-8870

Taiwan - Hsin Chu
Tel: 886-3-577-8366

Taiwan - Kaohsiung
Tel: 886-7-213-7830

Taiwan - Taipei
Tel: 886-2-2508-8600

Thailand - Bangkok
Tel: 66-2-694-1351

Vietnam - Ho Chi Minh
Tel: 84-28-5448-2100

EUROPE

Austria - Wels
Tel: 43-7242-2244-39
Fax: 43-7242-2244-393

Denmark - Copenhagen
Tel: 45-4485-5910
Fax: 45-4485-2829

Finland - Espoo
Tel: 358-9-4520-820

France - Paris
Tel: 33-1-69-53-63-20
Fax: 33-1-69-30-90-79

Germany - Garching
Tel: 49-8931-9700

Germany - Haan
Tel: 49-2129-3766400

Germany - Heilbronn
Tel: 49-7131-72400

Germany - Karlsruhe
Tel: 49-721-625370

Germany - Munich
Tel: 49-89-627-144-0
Fax: 49-89-627-144-44

Germany - Rosenheim
Tel: 49-8031-354-560

Israel - Ra'anana
Tel: 972-9-744-7705

Italy - Milan
Tel: 39-0331-742611
Fax: 39-0331-466781

Italy - Padova
Tel: 39-049-7625286

Netherlands - Drunen
Tel: 31-416-690399
Fax: 31-416-690340

Norway - Trondheim
Tel: 47-7288-4388

Poland - Warsaw
Tel: 48-22-3325737

Romania - Bucharest
Tel: 40-21-407-87-50

Spain - Madrid
Tel: 34-91-708-08-90
Fax: 34-91-708-08-91

Sweden - Gothenberg
Tel: 46-31-704-60-40

Sweden - Stockholm
Tel: 46-8-5090-4654

UK - Wokingham
Tel: 44-118-921-5800
Fax: 44-118-921-5820

© 2019 - 2022 Microchip Technology Inc. and its subsidiaries.