# Integrated Actuation Solutions

## CD-MSCSM70XM19CTYZBNMG (15KVA/270 VDC) Full SiC

## Product Family Overview

Microchip's Integrated Actuation Solution is a highly integrated, scalable, reliable, cost-effective, compact, and easy to use solution targeting electric motor drives and solenoids on actuator systems in aviation applications and designed in accordance with aviation standards. It is designed to be driven with external PWM signals.

This solution consists of a combination of Hybrid Power Drive (SP6HPD) and companion driver board to provide unparalleled integration with simplicity.

The SP6HPD module is comprised of a three-phase inverter bridge, and optional functions such as brake chopper, solenoid drive, and soft-start with Si IGBT or SiC MOSFET switches. The driver board provides a galvanically isolated interface to the semiconductor switches and their local feedback signals. The driver board is factory configurable, allowing it to drive both SiC MOSFETs and Si IGBTs at a higher switching frequency.

The integration of the gate driver board together with the SP6HPD gives direct access to a fully validated and optimized solution in terms of switching speed and losses, robustness against dV/dt, telemetry outputs and multiple protection such as Short- circuit, Under Voltage Lock Out (UVLO), Shoot-through, and Active Miller Clamping.

The solution ranges from 5KVA to 20KVA with the same footprints.

**Figure 1.** View of Integrated Actuation Solution

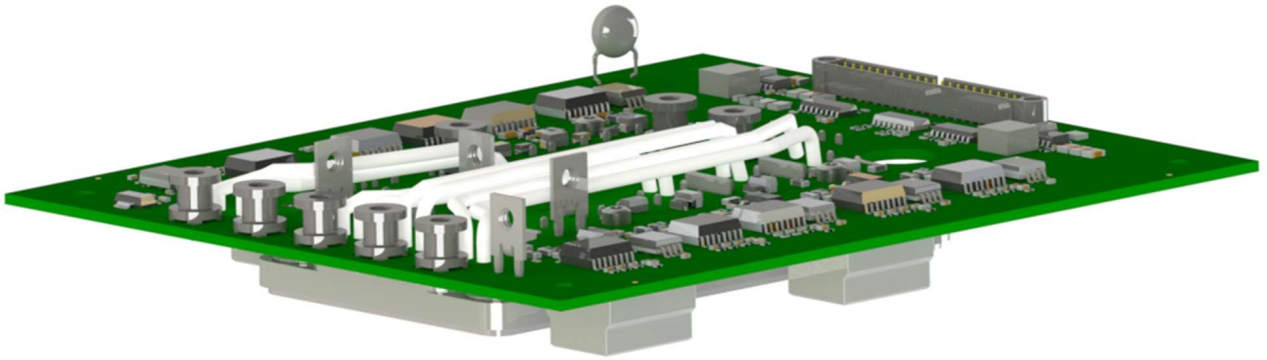


© 2024 Microchip Technology Inc. and its subsidiaries

**Figure 2.** Transparent Image

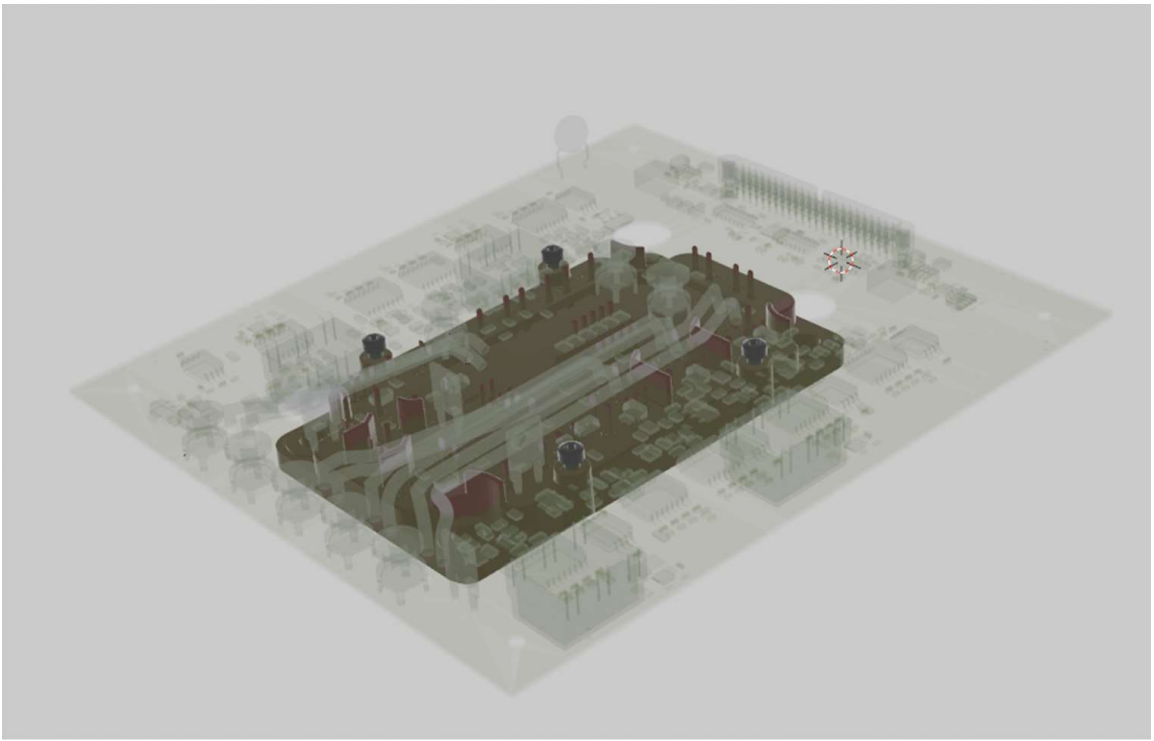


© 2024 Microchip Technology Inc. and its subsidiaries

# Table of Contents

Product Family Overview.... 1

1. Product Family Key Features.... 4
   1.1. Power Stage – SP6HPD Power Module.... 4
   1.2. Companion Driver Board.... 4

2. Product Family Functional Overview.... 5

3. Part Number.... 6

4. Electrical Specifications.... 7

5. Mechanical Specifications.... 13

6. Qualifications.... 17

7. Package Outline.... 18

8. Interface Description.... 19
   8.1. Signal Connector (J11): 2x23 Straight Male Connector.... 19
   8.2. Power Interface.... 22

9. Power Functionality (SP6HPD + Companion Driver Board) – Product Family.... 23

10. Gate Drive Board Functionality – Product Family.... 24

11. Revision History.... 26

Microchip Information.... 27
   The Microchip Website.... 27
   Product Change Notification Service.... 27
   Customer Support.... 27
   Microchip Devices Code Protection Feature.... 27
   Legal Notice.... 27
   Trademarks.... 28
   Quality Management System.... 29
   Worldwide Sales and Service.... 30


© 2024 Microchip Technology Inc. and its subsidiaries

# 1. Product Family Key Features

## 1.1 Power Stage – SP6HPD Power Module

- SiC MOSFET / Si IGBT switches with rating up to 1200V
- Three-phase inverter bridge with integrated shunt for phase current measurement
- Solenoid drive with Si IGBT, SiC Diode, and integrated shunt for current measurement
- Soft-start switch, Brake switch
- Options available without integrating Solenoid or Soft-Start or Brake Switch
- Integrated shunt for DC bus current measurement
- Two PT1000 temperature sensors
- Maximum 175 °C operating junction temperature

## 1.2 Companion Driver Board

- Compatible to Microchip SP6HPD power module
  - SP6HPD soldered directly on the driver board
  - Drives three-phase inverter bridge and switches for solenoid, brake, and soft start
  - Compatible to SiC MOSFET/ Si IGBT up to 1200V
  - Direct temperature sensor output (from SP6HPD)
- Environment
  - Maximum 110 °C operating ambient temperature (gate driver)
  - Altitudes up to 50,000 feet
  - RoHS compliant
  - Conformal coated for environmental protection
- Galvanically isolated gate drive – 1500 VAC, 50 Hz, 1 minute
- Partial discharge across isolation barrier <10 pC at $V_{inc}$ = 1327 VAC, $V_{ext}$ = 1062 VAC
- Single power supply ($V_{CC}$): +15V (typ.)
- UVLO on input $V_{CC}$ and internal bias supply
- LVDS control inputs from higher level system–PWM input and enable input for gate drive
- Switching frequency up to 20 kHz
- Negative gate drive: –4.3V (SiC Mosfet) and –8.2V (IGBT)
- Differential outputs for current and voltage telemetry–phase current, DC bus current, solenoid current, and DC Link bus voltage
- Desaturation protection
- Soft shutdown turn-off
- Active low fault reporting for all switches together
- Active Miller Clamping
- Shoot–through protection for inverter switches


© 2024 Microchip Technology Inc. and its subsidiaries

# 2. Product Family Functional Overview

Integrated Actuation Solution is an integration of the SP6HPD power module and its companion gate driver board that is used for motor drive applications. The functional block diagram of the Integrated Actuation Solution is shown in the following figure.

**Figure 2-1.** Block Diagram

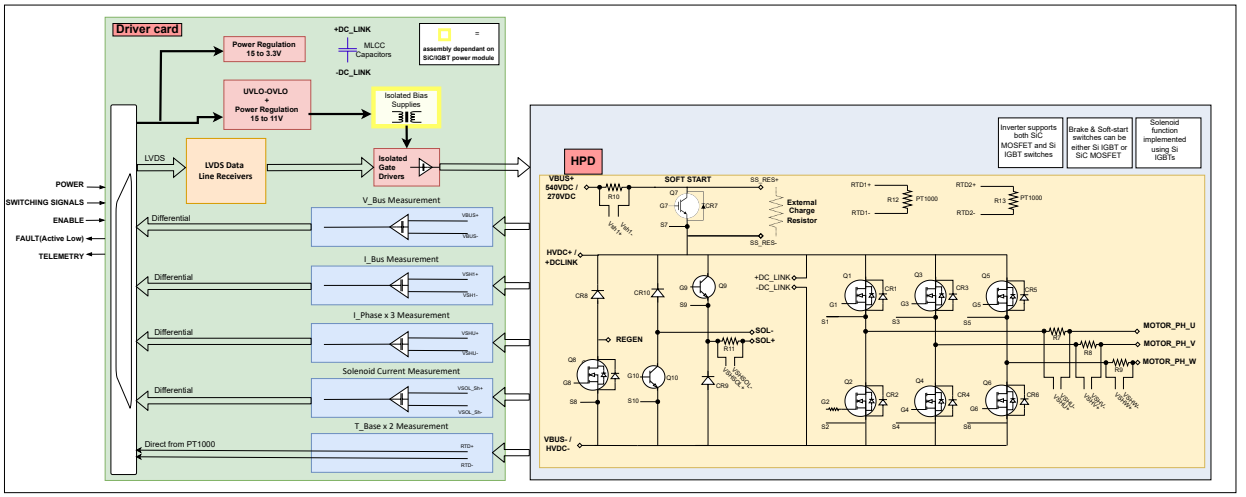


The driver board receives PWM inputs from a higher–level system and provides the gate-drive signals to the SP6HPD power switches (SiC MOSFET/Si IGBT), that is, three-phase inverter bridge switch, optional switches such as solenoid switch, soft-start switch, and brake switch. The driver board measures the voltage across the shunts in SP6HPD and provides current measurement signals as isolated differential output for phase current, bus current, and solenoid current (if equipped). The driver board also measures the DC link bus voltage and provides an isolated differential voltage output. Internal floating bias power supplies generate the bias voltages for the logic–side gate drivers and other telemetry circuits. The floating bias supplies, gate drivers, and measurement amplifiers within the driver PCB provide the required isolation to allow reliable interface with a higher–level system. Two platinum resistive temperature transducers (PT1000) on the SP6HPD are directly wired to the low–voltage connector through driver PCB. These temperature sensors monitor the SP6HPD temperature. A 2x23-pin connector is mounted on the driver board to interface the low– voltage power supply, PWM inputs, and monitoring signals to the system.

The power stage is the Microchip SP6HPD power module containing SiC MOSFET/Si IGBT switches with ratings up to 1200V to generate the three-phase switching outputs. The SP6HPD power module also has optional switches for functionalities like solenoid, brake, and soft start. Power and low-voltage signal routing are provided through pin terminals of SP6HPD soldered on to the driver board.


© 2024 Microchip Technology Inc. and its subsidiaries

# 3. Part Number

The following table shows the ordering part number of Integrated Actuation Solution (SP6HPD integrated with a companion driver board) and the respective SP6HPD power module used in the solution.

**Table 3-1.** Part Numbering – Integrated Actuation Solution

| DC Bus Voltage (V) | Power Level (kVA) | Inverter Switch Technology | Ordering Part Number of Integrated Actuation Solution | Corresponding Standard Part Number of SP6HPD |
|---|---|---|---|---|
| 270 | 15 | Full SiC | CD-MSCSM70XM19CTYZBNMG | MSCSM70XM19CTYZBNMG |

The following table shows the standard part number of SP6HPD along with its internal configuration.

**Table 3-2.** SP6HPD and Its Internal Configuration

| DC Link Bus Input | Power Rating | Ordering Standard Part Numbers of SP6HPD | Inverter | | Solenoid | | Soft-Start | | Brake | |
|---|---|---|---|---|---|---|---|---|---|---|
| | | | Switch Type | Switch Voltage | Switch Type | Switch Voltage | Switch Type | Switch Voltage | Switch Type | Switch Voltage |
| 270V | 15KVA | MSCSM70XM19CTYZBNMG | Full SiC | 700V | IGBT | 1200V | IGBT | 700V | SiC | 700V |

**Note:** Two PT1000 temperature sensors are present in the SP6HPD power module.


© 2024 Microchip Technology Inc. and its subsidiaries

# 4. Electrical Specifications

This section details the electrical specifications for the Integrated Actuation Solution and the driver board.

## Absolute Maximum Ratings

This section shows the absolute maximum ratings of the Integrated Actuation Solution.

**Table 4-1.** Absolute Maximum Ratings

| Parameter | Symbol | Condition | Max | Units |
|---|---|---|---|---|
| Input Low Voltage Supply | $V_{CC}$ | — | 18 | V |
| Input Low Voltage Supply Current | $I_{CC}$ | Fsw = 20 kHz | 0.8 | A |
| DC Link Bus Voltage | $V_{BUS}$ | VDC Link = 270 VDC | 400 | V |
| Maximum power semiconductor junction temperature | $T_J$ | — | 175 | °C |

## Typical Electrical Performance

The following table shows the DC Link Bus input electrical characteristics at ambient temperature $T_A$ = 25 °C unless otherwise specified.

**Table 4-2.** DCLink Bus Input Electrical Characteristics

| Parameters / Functions | Symbol | Conditions | Min | Typ | Max | Units |
|---|---|---|---|---|---|---|
| Steady State DC Link Bus Voltage Range | $V_{BUS}$ | — | 235 | 270 | 285 | V |
| Maximum Allowed Ripple Amplitude | $V_{BUSR}$ | — | — | — | 16 | V |
| Voltage Transients | $V_{BUSTR}$ | — | 160 | — | 400 | V |
| Internal Capacitance–DC Link (MLCC Capacitors) | $C_{BUSINT(MLCC)}$ | — | — | 0.132 | — | µF |

The following table shows the typical power output electrical characteristics at ambient temperature $T_A$ = 25 °C unless otherwise specified.

**Table 4-3.** Power Output Characteristics

| Parameters/ Functions | Symbol | Conditions | Value | Units |
|---|---|---|---|---|
| **Inverter** | | | | |
| Power Output | $P_O$ | $V_{BUS}$ = 270VDC | 15 | KVA |
| RMS Phase Current | $I_{PH95-RMS}$ | $T_{CASE}$=95 °C, $F_{SWINV}$ = 10 kHz | 56 | A |
| RMS Phase Current | $I_{PH105-RMS}$ | $T_{CASE}$ = 110 °C, $F_{SWINV}$ = 10 kHz | 28 | A |
| **Solenoid** | | | | |
| Max RMS Pull-in Current | $I_{SOLP}$ | t<100 ms | 5 | A |
| Max Holding Current | $I_{SOLH}$ | Continuous | 1 | A |
| **Brake Function** | | | | |
| Switch Rated Current | $I_{BRAKE}$ | $T_{CASE}$ = 80 °C | 88 | A |


© 2024 Microchip Technology Inc. and its subsidiaries

| .....continued | | | | |
|---|---|---|---|---|
| **Parameters/ Functions** | **Symbol** | **Conditions** | **Value** | **Units** |
| **Soft-start external resistor** | | | | |
| Maximum Current | $I_{SSMAX}$ | Restricted by terminal rating | 15 | A |

The following table shows typical switching characteristics of SP6HPD + driver board at ambient temperature $T_A$ = 25 °C unless otherwise specified.

**Table 4-4.** SP6HPD + Driver Board Switching Characteristics

| Parameters/Functions | Symbol | Conditions | Typ. | Units |
|---|---|---|---|---|
| **Inverter** | | | | |
| Switching Voltage Transient Rate | dV/dt | $V_{BUS}$=270VDC, $I_{PH95\text{-}Peak}$ = 79A, $T_{CASE}$ = 25 °C | 5 | kV/µs |
| Turn–On Energy | $E_{ON\text{-}INV}$ | $V_{BUS}$ = 270VDC, $I_{PH95\text{-}Peak}$ = 79A, $T_{CASE}$ = 25 °C | 0.966 | mJ |
| Turn–Off Energy | $E_{OFF\text{-}INV}$ | $V_{BUS}$ = 270VDC, $I_{PH95\text{-}Peak}$ = 79A, $T_{CASE}$ = 25 °C | 0.796 | mJ |
| **Solenoid** | | | | |
| Switching Voltage Transient Rate | dV/dt | $V_{BUS}$ = 270VDC, $I_{SOLP}$ = 5A, $T_{CASE}$ = 25 °C | 5 | kV/µs |
| Turn–On Energy | $E_{ON\text{-}SOL}$ | $V_{BUS}$ = 270VDC, $I_{SOLP}$ = 5A, $T_{CASE}$ = 25 °C | 0.051 | mJ |
| Turn–Off Energy | $E_{OFF\text{-}SOL}$ | $V_{BUS}$ = 270VDC, $I_{SOLP}$ = 5A, $T_{CASE}$ = 25 °C | 0.122 | mJ |
| **Brake** | | | | |
| Switching Voltage Transient Rate | dV/dt | $V_{BUS}$ = 400VDC, $I_{BRAKE}$ = 88A, $T_{CASE}$ = 25 °C | 5 | kV/µs |
| Turn–On Energy | $E_{ON\text{-}B}$ | $V_{BUS}$ = 400VDC, $I_{BRAKE}$ = 88A, $T_{CASE}$ = 25 °C | 1.81 | mJ |
| Turn–Off Energy | $E_{OFF\text{-}B}$ | $V_{BUS}$ = 400VDC, $I_{BRAKE}$ = 88A, $T_{CASE}$ = 25 °C | 1.94 | mJ |

**Note:** In the application, the soft start switch is meant to turn on and turn off at almost zero current, hence switching energy of soft start switch is not provided.

The following table shows the gate drive electrical characteristics at ambient temperatures –55 °C to +110 °C unless otherwise specified.

**Table 4-5.** Gate Drive Characteristics

| Parameter | Symbol | Condition | Min | Typ. | Max | Units |
|---|---|---|---|---|---|---|
| **Driver Board Power Supply** | | | | | | |
| Input Voltage | $V_{CC}$ | — | 14.5 | 15 | 15.5 | V |
| Input Voltage Ripple Amplitude | $V_{CCR(P\text{-}P)}$ | — | — | — | 50 | mV (P-P) |
| Under–Voltage Lock-Out | $V_{CCUVLO}$ | Threshold Rising | — | 14 | 14.42 | V |
| | | Threshold Falling | 13.58 | — | — | V |
| Over-Voltage Lock-Out | $V_{CCOVLO}$ | Threshold Rising | — | 16 | 16.48 | V |
| | | Threshold Falling | 15.52 | — | — | V |
| Supply Current | $I_{CC}$ | PWM = OFF, VIN = 15V, $T_A$ = 25 °C | — | 310 | — | mA |
| **LVDS PWM Inputs – All Switches** | | | | | | |


© 2024 Microchip Technology Inc. and its subsidiaries

.....continued

| Parameter | Symbol | Condition | Min | Typ. | Max | Units |
|---|---|---|---|---|---|---|
| Magnitude of Differential Input Voltage | $V_{IDPWM}$ | — | 0.1 | — | 3 | V |
| Switching Frequency | $F_{SW}$ | — | — | 10 | 20 | kHz |
| Duty Cycle | $D_C$ | — | 0 | — | 100 | % |
| Voltage at any input (Separately or common mode) | $V_I$ or $V_{IC}$ | — | –4 | — | 5 | V |
| PWM non- overlapping dead-time | $DT_{PWM}$ | — | — | 750 | — | ns |
| Positive-going differential input voltage threshold | $V_{IPPWM}$ | — | — | — | +50 | mV |
| Negative-going differential input voltage threshold | $V_{INPWM}$ | — | –50 | — | — | mV |
| Differential input failsafe voltage threshold | $V_{IDPWM}$ | — | –32 | — | –100 | mV |
| **Drive Enable/Disable – LVDS** | | | | | | |
| Positive-going differential input voltage threshold | $V_{IPEN}$ | — | — | — | +50 | mV |
| Negative-going differential input voltage threshold | $V_{INEN}$ | — | –50 | — | — | mV |
| Differential input failsafe voltage threshold | $V_{IDEN(fs\text{-}th)}$ | — | –32 | — | –100 | mV |
| Magnitude of Differential input voltage | $V_{IDEN}$ | — | 0.1 | — | 3 | V |
| Voltage at any input (Separately or common mode) | $V_I$ or $V_{IC}$ | — | –4 | — | 5 | V |
| Minimum Pulse Width | $t_{enable}$ | — | 800 | — | — | ns |
| **Gate Drive** | | | | | | |
| Turn-On Output Voltage | $V_{g(on)}$ | $F_{SW}$ = up to 20kHz | 18.1 | — | 19.9 | V |
| Turn-Off Output Voltage | $V_{g(off)}$ | — | –4.52 | –4.3 | –4.09 | V |
| UVLO internal bias – Positive Going Threshold | $V_{ibuvlo}$ | Internal Gate Drive Supply, $T_A$ = 25 °C | — | 12 | 13 | V |
| UVLO Internal Bias – Negative Going Threshold | $V_{ibuvlohys}$ | Internal Gate Drive Supply, $T_A$ = 25 °C | 9.5 | 11 | — | V |
| Turn-On Propagation Delay | $t_{d(on)io}$ | PWM Input to Gate Output, $T_A$ = 25 °C | — | 150 | — | ns |
| Turn-Off Propagation Delay | $t_{d(off)io}$ | PWM Input to Gate Output, $T_A$ = 25 °C | — | 150 | — | ns |
| Active Miller Clamp Threshold Voltage | $V_{CLTH}$ | $T_A$ = 25 °C | 1.6 | 2.1 | 2.5 | V |
| Desaturation Threshold – W.R.T. Power Switch Source | $V_{DSTH}$ | $T_A$ = 25 °C | — | 5.1 | — | V |
| Desaturation Blanking Time | $t_{ds(BL)}$ | $T_A$ = 25 °C | — | 0.879 | — | µs |
| Desaturation Detection to FAULT in Fault State | $t_{ds(FLT)}$ | $T_A$ = 25 °C | — | — | 1.4 | µs |


© 2024 Microchip Technology Inc. and its subsidiaries

.....continued

| Parameter | Symbol | Condition | Min | Typ. | Max | Units |
|---|---|---|---|---|---|---|
| Soft Turn-Off at Short-Circuit<br>– Desat sense to 10% gate voltage. | $t_{ssd}$ | $V_{BUS}$ = 270VDC,<br>$T_{CASE}$ = 25 °C | — | 1.4 | — | µs |
| **Fault Output – Active Low** | | | | | | |
| Output Voltage–High | $V_{FLTH}$ | w.r.t GND of input supply,<br>$T_A$ = 25 °C | — | 3.3 | — | V |
| Output Voltage–Low | $V_{FLTL}$ | w.r.t GND of input supply | — | 0.1 | — | V |

The following table shows the telemetry characteristics of the gate drive board at ambient temperatures –55 °C to +110 °C unless otherwise specified.

**Table 4-6.** Telemetry Characteristics

| Parameter | Symbol | Condition | Min | Typ | Max | Units |
|---|---|---|---|---|---|---|
| **DC Link Bus Voltage Monitoring - Analog Output** | | | | | | |
| Monitoring Range | $V_{BUS}$ | — | 0 | — | 500 | V |
| Output Differential Voltage | $V_{BUSD}$ | — | — | $V_{BUS}$*0.004 | — | V |
| Accuracy | — | Full Scale | — | — | 3 | % |
| Bandwidth | — | At –3 dB | 200 | — | — | kHz |
| Withstand Isolation Voltage | — | AC, 50 Hz, 1 minute | 1500 | — | — | V |
| **DC Bus Current Monitoring – Analog Output** | | | | | | |
| Monitoring Range | $I_{BUS}$ | — | 0 | — | 167 | A |
| Output Differential Voltage | $V_{IBD}$ | Full scale current | — | 2.05 | — | V |
| Accuracy | — | Full Scale | — | — | 3 | % |
| Bandwidth | — | At –3 dB | 200 | — | — | kHz |
| Withstand Isolation Voltage | — | AC, 50 Hz, 1 minute | 1500 | — | — | V |
| **Phase Current Monitoring – Analog Output** | | | | | | |
| Monitoring Range | $I_{PH}$ | — | — | — | — | A |
| | | — | –167 | — | 167 | |
| Output Differential Voltage | $V_{IPHD}$ | 1. Full Scale Current<br>2. Polarity depends on measured current polarity. | — | ±2.05 | — | V |
| Accuracy | — | Full Scale | — | — | 3 | % |
| Bandwidth | — | At –3dB | 200 | — | — | kHz |
| Withstand Isolation Voltage | — | AC, 50 Hz, 1 minute | 1500 | — | — | V |
| **Solenoid Current Monitoring – Analog Output** | | | | | | |
| Monitoring Range | $I_{SOL}$ | — | –16.7 | — | 16.7 | A |


© 2024 Microchip Technology Inc. and its subsidiaries

.....continued

| Parameter | Symbol | Condition | Min | Typ | Max | Units |
|---|---|---|---|---|---|---|
| Output Differential Voltage | $V_{ISOLD}$ | 1. Full Scale Current<br>Polarity depends on measured current polarity. | — | ±2.05 | — | V |
| Accuracy | — | Full Scale | — | — | 3 | % |
| Bandwidth | — | At –3dB | 200 | — | — | kHz |
| Withstand Isolation Voltage | — | AC, 50 Hz, 1 minute | 1500 | — | — | V |
| **Temperature Monitoring – RTD Output** | | | | | | |
| Resistance at 0deg cent | RTD 1, RTD2 | 1. PT1000 Type<br>a. Two sensors part of SP6HPD<br>2. Directly routed to J11 connector | — | 1000 | — | Ω |
| Accuracy | — | — | — | ±2 | — | °C |
| Difference between two sensors | — | — | — | — | 4 | °C |
| Measurement Range | — | — | –60 | — | +150 | °C |

The following table shows the Isolation characteristics at ambient temperature 25 °C unless otherwise specified.

**Table 4-7.** Isolation Characteristics

| Parameter | Symbol | Condition | Min | Typ. | Max | Units |
|---|---|---|---|---|---|---|
| Dielectric strength between power terminals and low–voltage connector | $V_{ISOL1}$ | AC RMS, 50 Hz, 1 minute | 1500 | — | — | V |
| Insulation resistance between power terminals and low–voltage connector | $R_{ISOL2}$ | $V_{ISOL2}$ = 500 VDC | 100 | — | — | MΩ |
| Dielectric Strength between any terminal to case | $V_{ISOL3}$ | AC RMS, 50/60 Hz, 1 minute | 1500 | — | — | V |
| Insulation resistance between the SP6HPD power part and the temperature sensors | $R_{ISOL4}$ | $V_{ISOL4}$ = 500 VDC | 100 | — | — | MΩ |
| Insulation resistance between temperature sensors | $R_{ISOL5}$ | $V_{ISOL5}$ = 45VDC | 100 | — | — | MΩ |
| Partial Discharge between isolation barrier | PD | $T_A$ = –55 °C to +110 °C<br>Altitude up to 50000 ft<br>$V_{Inc}$ = 1327 Vrms<br>$V_{ext}$ = 1062 Vrms | — | — | <10 | pC |
| Parasitic Capacitance | $C_p$ | Between High Side and Primary (per switch) | — | 10 | — | pF |
| Gate Driver Common-Mode Transient Immunity (CMTI) | $dV_{ISO}/dt$ | VCM=1KV | 100 | — | — | kV/µs |

The following table shows the operating environment.


© 2024 Microchip Technology Inc. and its subsidiaries

**Table 4-8.** Operating Environment

| Parameter | Symbol | Condition | Min | Typ. | Max | Units |
|---|---|---|---|---|---|---|
| SP6HPD Case Temperature | $T_C$ | — | –55 | — | +110 | °C |
| Driver Board Operating Ambient Temperature | $T_{AD}$ | — | –55 | — | +110 | °C |
| Storage Temperature | $T_S$ | — | –55 | — | +125 | °C |
| Pressure Range | — | — | 11.6 | — | 190 | kPa |

**Note:** Testing at maximum pressure 190 kPa can be performed on demand.


© 2024 Microchip Technology Inc. and its subsidiaries

# 5. Mechanical Specifications

The following table provides mechanical characteristics.

**Table 5-1.** Mechanical Characteristics

| Parameter | Conditions | Typ. | Unit |
|---|---|---|---|
| Size | — | 162 x 138 x 29.35 | mm |
| Mass | Without mounting hardware | 380 | g |

The following figure shows the power terminal and signal connector locations.

**Figure 5-1.** Power Terminal and Signal Connector Locations

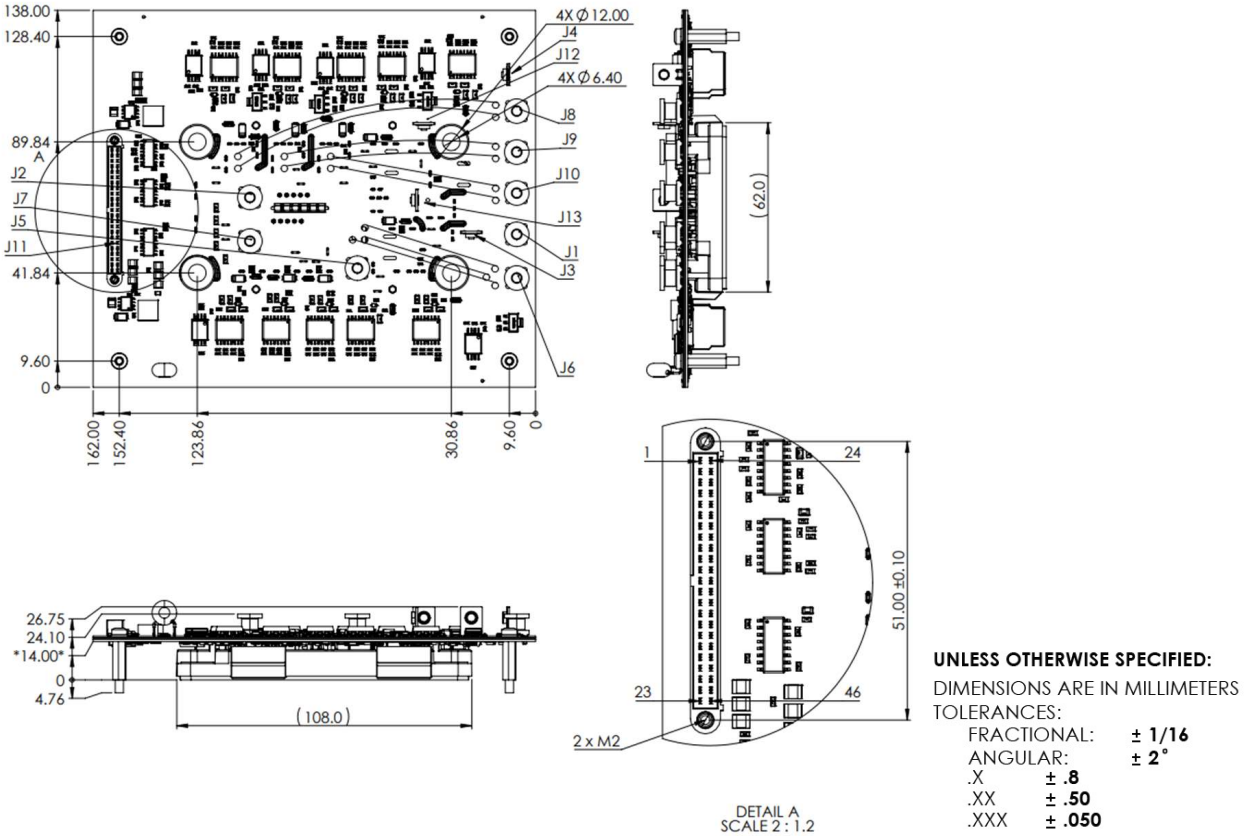


The following table provides the power terminal references and torque values.

**Table 5-2.** Power Terminals References and Torque

| Connector | Reference | Torque Reference | Maker | Type No. |
|---|---|---|---|---|
| J1 | HV_IN+ | 1.7 Nm | BROXING | SN09R4M-H8 |
| J2 | BUS+ | 1.7 Nm | BROXING | SN09R4M-H8 |
| J3 | SSRES+ | — | KEYSTONE ELECTRONICS | 9-7837-M3 |
| J4 | SOL+ | — | KEYSTONE ELECTRONICS | 9-7837-M3 |
| J5 | REGEN | 1.7 Nm | BROXING | SN09R4M-H8 |


© 2024 Microchip Technology Inc. and its subsidiaries

**.....continued**

| Connector | Reference | Torque Reference | Maker | Type No. |
|---|---|---|---|---|
| J6 | HV_IN- | 1.7 Nm | BROXING | SN09R4M-H8 |
| J7 | BUS- | 1.7 Nm | BROXING | SN09R4M-H8 |
| J8 | PHU | 1.7 Nm | BROXING | SN09R4M-H8 |
| J9 | PHV | 1.7 Nm | BROXING | SN09R4M-H8 |
| J10 | PHW | 1.7 Nm | BROXING | SN09R4M-H8 |
| J11 | LV CONNECTOR | — | NICOMATIC | 221Y46F22HW |
| J12 | SOL- | — | KEYSTONE ELECTRONICS | 9-7837-M3 |
| J13 | SSRES- | — | KEYSTONE ELECTRONICS | 9-7837-M3 |

| FASTENER | TORQUE |
|---|---|
| M2.5 | 0.30 Nm MAX |
| M3 | 0.65 Nm MAX |
| M6 | 4.0 Nm ± 1Nm |

The following figure shows the mechanism to mount to the customer interface.


© 2024 Microchip Technology Inc. and its subsidiaries

**Figure 5-2.** Mounting to Customer Interface

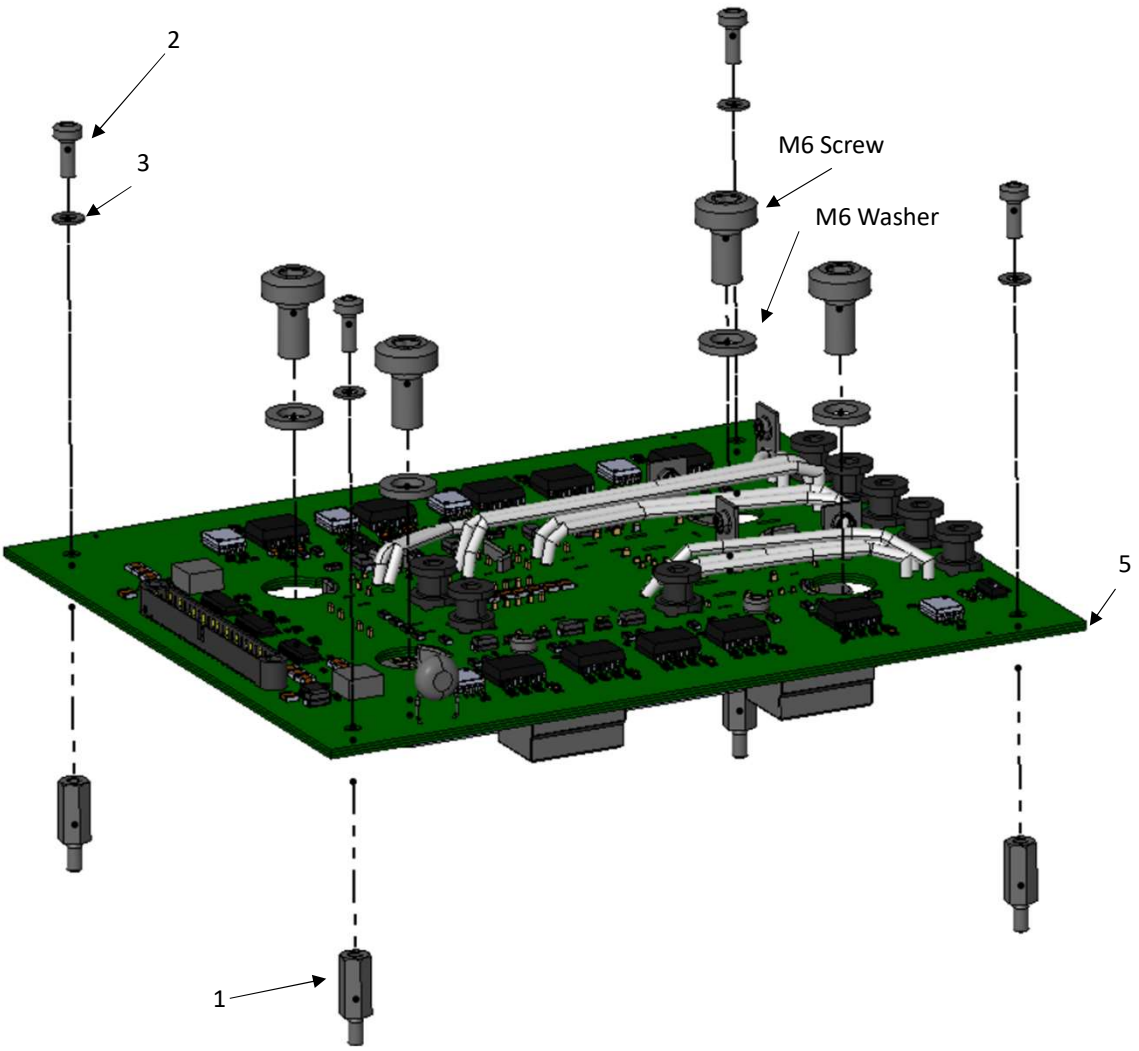


**Note:** Install item 1 to user's interface plate, then user four stainless steel M6 washers and four stainless steel M6 screws with suitable length to fix the power module. Finally, screw item 2 with item 3. Refer to the suggested torque in the table above. Apply proper thread lock compound to all screws and standoffs before assembly.

The following table provides the components supplied as part of deliverables.


© 2024 Microchip Technology Inc. and its subsidiaries

**Table 5-3.** Deliverables

| Item No. | Description | Qty | Unit |
|---|---|---|---|
| 1 | Male-Female Threaded Hex Standoff, Stainless Steel, 4.5 mm Hex, 14 mm Long, M3 x 0.50 mm Thread | 4 | PC |
| 2 | ISO 14583 M3 x 8, Stainless Steel A2: Hexalobular socket pan head screw | 4 | PC |
| 3 | M3 DIN 433 Stainless Steel A2 Washer | 4 | PC |
| 5 | SP6HPD + Driver Board | 1 | PC |

**Note:** In addition, 4x M6 screws as per required length are to be used for screwing the SP6HPD power module to the customer interface. These screws as well as 4x M6 washers are not provided as part of the deliverables.


© 2024 Microchip Technology Inc. and its subsidiaries

# 6. Qualifications

The following table provides the details of the qualification plan. The qualification tests are ongoing, but engineering tests have been successfully completed for all the demanding mechanical or environmental conditions.

**Table 6-1.** Qualifications Test

| Test | Conditions |
|---|---|
| High Temperature Cycle | DO–160G, Section 4, Cat. D2 (100 °C) |
| Low Temperature Cycle | DO–160G, Section 4, Cat. D2 (–55 °C) |
| Cold Temperature Start-up | 10 starts, –55 °C |
| Temperature Variation | DO–160G, Section 5, Cat. A (>10 °C/minute) |
| Altitude | DO–160G, Section 4, Cat. D2 (Unpressurized area) (50,000 feet) |
| Humidity | DO–160G, Section 6, Cat. C (55 °C, 95% RH) |
| Operational Vibration | DO–160G, Section 8, Cat. R, Curve E1 (11g) |
| Operational Shock and Crash Safety | DO–160G, Section 7, Cat. D (20g, 11 ms, saw–tooth) |

**Note:** Partial discharge testing performed before and after the qualification tests.


© 2024 Microchip Technology Inc. and its subsidiaries

# 7. Package Outline

The following figure shows the package outline of the integrated solution of the SP6HPD and driver board.

**Figure 7-1.** Package Outline

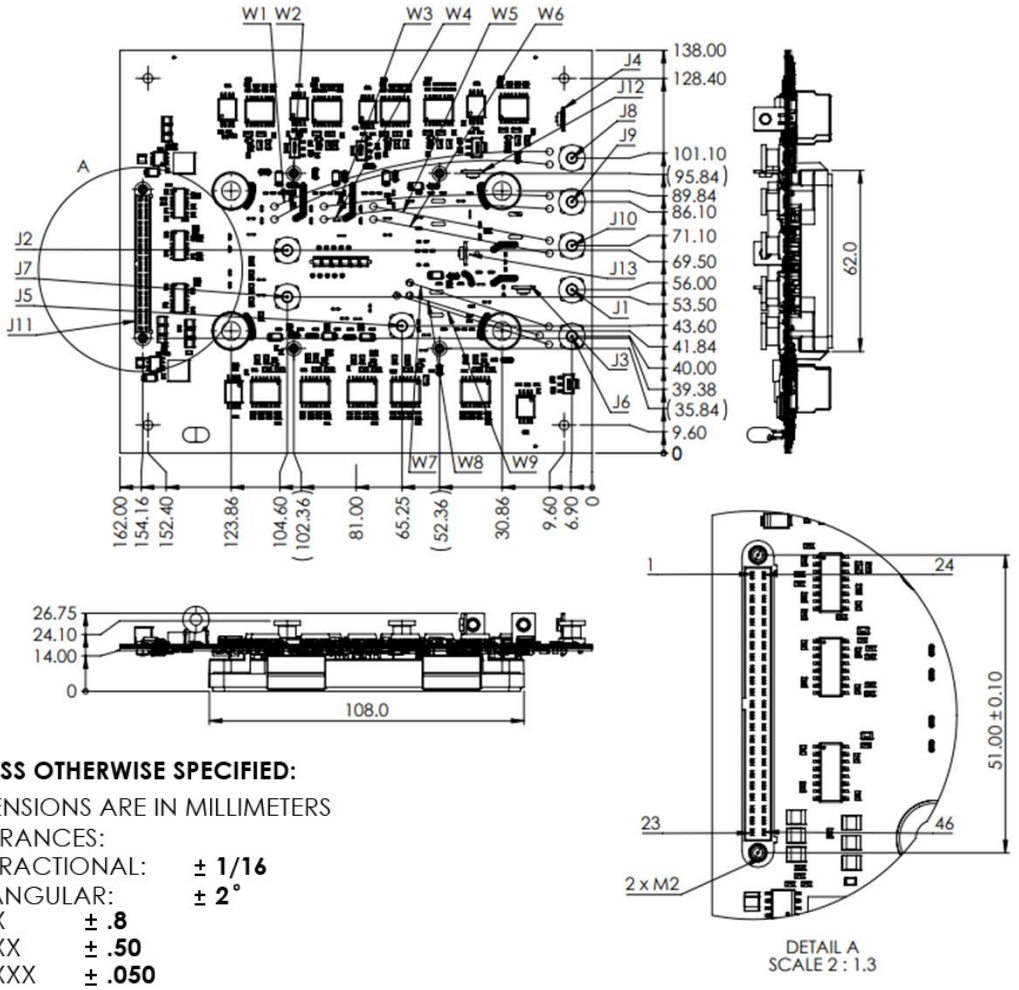


**UNLESS OTHERWISE SPECIFIED:**

DIMENSIONS ARE IN MILLIMETERS

TOLERANCES:

| | |
|---|---|
| FRACTIONAL: | **± 1/16** |
| ANGULAR: | **± 2°** |
| .X | **± .8** |
| .XX | **± .50** |
| .XXX | **± .050** |

**Note:** The detailed dimensions can be referred to the 3D file which is available as requested.


© 2024 Microchip Technology Inc. and its subsidiaries

# 8. Interface Description

## 8.1 Signal Connector (J11): 2x23 Straight Male Connector

Nicomatic Make, Type No. 221Y46F22HW

**Figure 8-1.** J11 Signal Connector Interface Pin-Outs

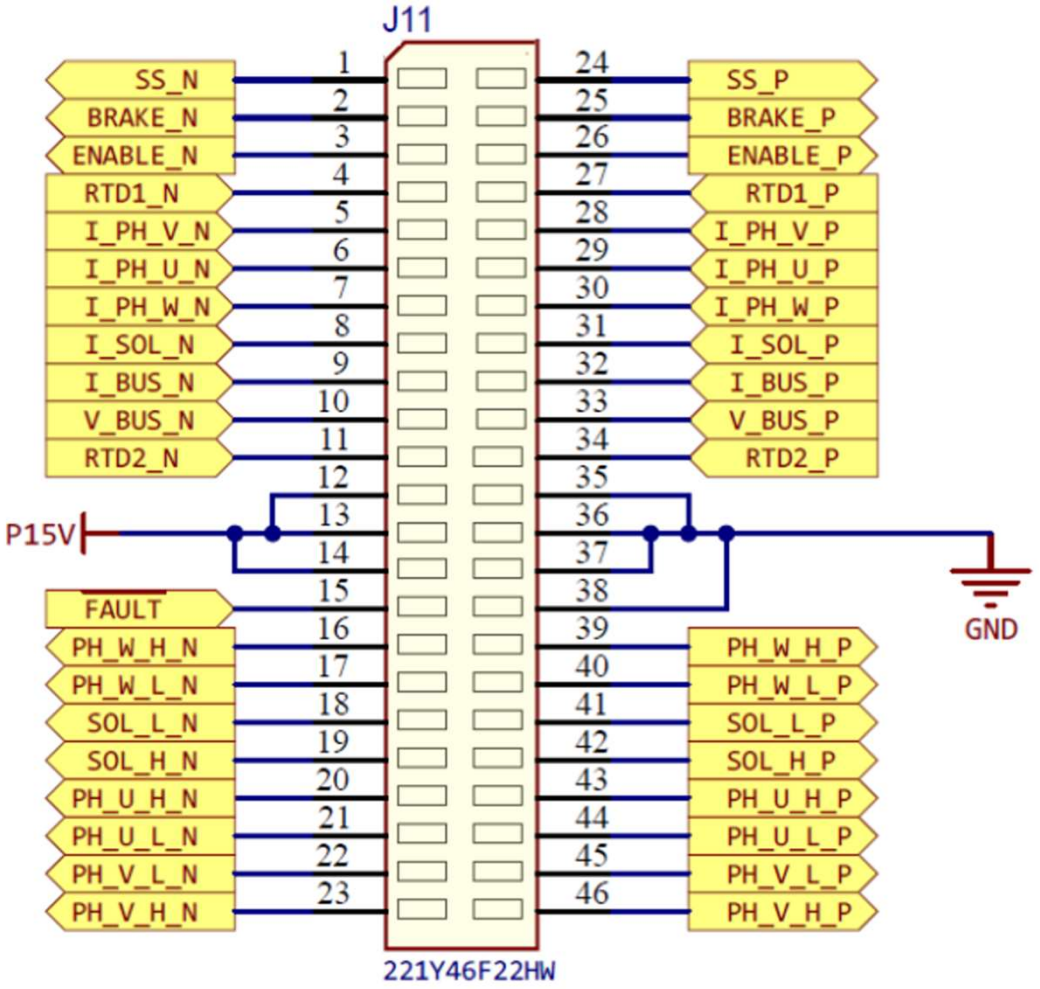



© 2024 Microchip Technology Inc. and its subsidiaries

**Table 8-1.** J11 Signal Connector Pin Description

| Pin No. | Signal | Input/ Output | Description | Definition |
|---|---|---|---|---|
| 1 | PWM_SS_N | Input | PWM Input Soft Start – Differential (LVDS) Inverting Input | PWM input from higher level system for soft start switch |
| 2 | PWM_BRAKE_N | Input | PWM Input Brake – Differential (LVDS) Inverting Input | PWM input from higher level system for brake switch |
| 3 | ENABLE_N | Input | Enable Input – Differential (LVDS) Inverting Input | Enable input for enabling all drive functionalities of the gate driver board |
| 4 | RTD1_N | Output | Temperature Sensor 1 (-) | Sensor 1 PT1000 directly wired output (-) |
| 5 | I_PH_V_N | Output | V Phase Current – Differential Inverting Output | Phase V current output as differential voltage – Inverting |
| 6 | I_PH_U_N | Output | U Phase Current – Differential Inverting Output | Phase U current output as differential voltage – Inverting |
| 7 | I_PH_W_N | Output | W Phase Current – Differential Inverting Output | Phase W current output as differential voltage – Inverting |
| 8 | I_SOL_N | Output | Solenoid Current – Differential Inverting Output | Solenoid current output as differential voltage – Inverting |
| 9 | I_BUS_N | Output | DC Bus Current – Differential Inverting Output | DC Bus Current output as differential voltage – Inverting |
| 10 | V_BUS_N | Output | DC Bus Voltage – Differential Inverting Output | DC Bus Voltage output as differential voltage – Inverting |
| 11 | RTD2_N | Output | Temperature Sensor 2 (-) | Sensor 2 PT1000 directly wired output (-) |
| 12 | P15V | Input | +15V Power Supply | Input power supply 15V to gate drive board |
| 13 | P15V | Input | +15V Power Supply | Input power supply 15V to gate drive board |
| 14 | P15V | Input | +15V Power Supply | Input power supply 15V to gate drive board |
| 15 | $\overline{FAULT}$ | Output | Active Low Fault Output | Active low Fault output for Desat condition in any of the power module switches |
| 16 | PWM_PH_W_H_N | Input | PWM Input Phase W Top Switch – Differential (LVDS) Inverting Input | PWM input from higher level system for phase W top switch (Inverting) |
| 17 | PWM_PH_W_L_N | Input | PWM Input Phase W Bottom Switch – Differential (LVDS) Inverting Input | PWM input from higher level system for phase W bottom switch (Inverting) |
| 18 | PWM_SOL_L_N | Input | PWM Input Solenoid Bottom Switch – Differential (LVDS) Inverting Input | PWM input from higher level system for Solenoid bottom switch (Inverting) |
| 19 | PWM_SOL_H_N | Input | PWM Input Solenoid Top Switch – Differential (LVDS) Inverting Input | PWM input from higher level system for Solenoid top switch (Inverting) |
| 20 | PWM_PH_U_H_N | Input | PWM Input Phase U Top Switch – Differential (LVDS) Inverting Input | PWM input from higher level system for phase U top switch (Inverting) |
| 21 | PWM_PH_U_L_N | Input | PWM Input Phase U Bottom Switch – Differential (LVDS) Inverting Input | PWM input from higher level system for phase U bottom switch (Inverting) |
| 22 | PWM_PH_V_L_N | Input | PWM Input Phase V Bottom Switch – Differential (LVDS) Inverting Input | PWM input from higher level system for phase V Bottom switch (Inverting) |
| 23 | PWM_PH_V_H_N | Input | PWM Input Phase V Top Switch – Differential (LVDS) Inverting Input | PWM input from higher level system for phase V top switch (Inverting) |
| 24 | PWM_SS_P | Input | PWM Input Soft-Start – Differential (LVDS) Non-Inverting Input | PWM input from higher level system for Soft-Start switch (Inverting) |
| 25 | PWM_BRAKE_N | Input | PWM Input Brake – Differential (LVDS) Non–Inverting Input | PWM input from higher level system for Brake switch (Inverting) |


© 2024 Microchip Technology Inc. and its subsidiaries

.....continued

| Pin No. | Signal | Input/ Output | Description | Definition |
|---|---|---|---|---|
| 26 | ENABLE_P | Input | Enable Input – Differential (LVDS) Non–Inverting Input | Enable input from higher level system for enabling all gate drive channels |
| 27 | RTD1_P | Output | Temperature Sensor 1 (+) | Sensor 1 PT1000 directly wired output (+) |
| 28 | I_PH_V_P | Output | V Phase Current – Differential Non–Inverting Output | Phase V current output as differential voltage – Non–Inverting |
| 29 | I_PH_U_P | Output | U Phase Current – Differential Non–Inverting Output | Phase U current output as differential voltage – Non–Inverting |
| 30 | I_PH_W_P | Output | W Phase Current – Differential Non–Inverting Output | Phase W current output as differential voltage – Non–Inverting |
| 31 | I_SOL_P | Output | Solenoid Current – Differential Non–Inverting Output | Solenoid current output as differential voltage – Non–Inverting |
| 32 | I_BUS_P | Output | DC Bus Current – Differential Non–Inverting Output | DC Bus Current output as differential voltage – Non–Inverting |
| 33 | V_BUS_P | Output | DC Bus Voltage – Differential Non–Inverting Output | DC Bus Voltage output as differential voltage – Non–Inverting |
| 34 | RTD2_P | Output | Temperature Sensor 2 (+) | Sensor 2 PT1000 directly wired output (+) |
| 35 | GND | Input | GND Power Supply | Input power supply Ground to gate drive board |
| 36 | GND | Input | GND Power Supply | Input power supply Ground to gate drive board |
| 37 | GND | Input | GND Power Supply | Input power supply Ground to gate drive board |
| 38 | GND | Input | GND Power Supply | Input power supply Ground to gate drive board |
| 39 | PWM_PH_W_H_P | Input | PWM Input Phase W Top Switch – Differential (LVDS) Non–Inverting Input | PWM input from higher level system for phase W top switch – Non– Inverting |
| 40 | PWM_PH_W_L_P | Input | PWM Input Phase W Bottom Switch – Differential (LVDS) Non–Inverting Input | PWM input from higher level system for phase W bottom switch – Non–Inverting |
| 41 | PWM_SOL_L_P | Input | PWM Input Solenoid Bottom Switch – Differential (LVDS) Non–Inverting Input | PWM input from higher level system for Solenoid bottom switch – Non–Inverting |
| 42 | PWM_SOL_H_P | Input | PWM Input Solenoid Top Switch – Differential (LVDS) Non–Inverting Input | PWM input from higher level system for Solenoid top switch – Non–Inverting |
| 43 | PWM_PH_U_H_P | Input | PWM Input Phase U Top Switch – Differential (LVDS) Non–Inverting Input | PWM input from higher level system for phase U top switch – Non–Inverting |
| 44 | PWM_PH_U_L_P | Input | PWM Input Phase U Bottom Switch – Differential (LVDS) Non–Inverting Input | PWM input from higher level system for phase U bottom switch – Non– Inverting |
| 45 | PWM_PH_V_L_P | Input | PWM Input Phase V Bottom Switch – Differential (LVDS) Non–Inverting Input | PWM input from higher level system for phase V Bottom switch – Non–Inverting |
| 46 | PWM_PH_V_H_P | Input | PWM Input Phase V Top Switch – Differential (LVDS) Non–Inverting Input | PWM input from higher level system for phase V top switch – Non–Inverting |


© 2024 Microchip Technology Inc. and its subsidiaries

## 8.2 Power Interface

**Table 8-2.** Power Terminals Description

| Pin | Reference | Description | Type of Terminal |
|---|---|---|---|
| J1 | HV_IN+ | HV DC Input + | M4 Screw Terminal |
| J2 | BUS+ | External DC Bus Capacitor + | M4 Screw Terminal |
| J3 | SSRES+ | Soft-Start Resistor Terminal + | M3 Screw Terminal VERT |
| J4 | SOL+ | Solenoid Terminal + | M3 Screw Terminal VERT |
| J5 | REGEN | Brake Resistor + | M4 Screw Terminal |
| J6 | HV_IN- | HV DC Input - | M4 Screw Terminal |
| J7 | BUS- | External DC Bus Capacitor - | M4 Screw Terminal |
| J8 | PHU | Phase U Output Terminal | M4 Screw Terminal |
| J9 | PHV | Phase V Output Terminal | M4 Screw Terminal |
| J10 | PHW | Phase W Output Terminal | M4 Screw Terminal |
| J12 | SOL- | Solenoid Terminal - | M3 Screw Terminal VERT |
| J13 | SSRES- | Soft-Start Resistor Terminal - | M3 Screw Terminal VERT |


© 2024 Microchip Technology Inc. and its subsidiaries

# 9. Power Functionality (SP6HPD + Companion Driver Board) – Product Family

### Input

The input to the power stage is DC voltage through J1 and J6 terminals. External DC link capacitor must be connected to terminals J2 and J7 through low inductive path to have clean switching of power modules and to avoid overheating of MLCC DC-link capacitors present on the PCB board.

### Soft Start

The soft start function is used to avoid a sudden in-rush current drawn by DC link capacitor when DC input is turned on. If SP6HPD is equipped with the soft start switch, terminals J3 and J13 are used for connecting the soft start resistor. When the DC input is switched ON, the external DC link capacitor is first charged through the soft start resistor and then the soft-start switch can be turned on by the higher-level system to bypass the soft start resistor. The external PWM input to the soft start switch is provided to the signal connector J11.

### Three-Phase Output

The electrical power coming from the DC power supply is modulated according to the received PWM inputs and a three-phase output is available in terminals J8, J9, and J10. The external PWM inputs from higher level system are provided to the signal connector J11.

### Solenoid Drive

The electrical power coming from the DC power supply is modulated according to the received PWM inputs and the solenoid is driven. If SP6HPD is equipped with Solenoid switch, terminals J4 and J12 are used to connect the solenoid load. The external PWM inputs from higher-level system are provided to the signal connector J11.

### Brake

Whenever braking action is required to be taken by the higher-level system, the PWM inputs are provided to the brake switch to dissipate the energy across the brake resistor. If SP6HPD is equipped with the brake switch, terminal J5 is used to connect the brake resistor. The external PWM inputs from a higher-level system are provided to the signal connector J11.


© 2024 Microchip Technology Inc. and its subsidiaries

# 10. Gate Drive Board Functionality – Product Family

### Input

The input to gate drive supply is 15V through signal connector J11.

### Under Voltage Lock Out (UVLO)

The readiness for the gate driver to be operated is under the control of two UVLO circuits monitoring the input side and internal bias voltage.

The gate driver board constantly monitors the input 15V supply. UVLO feature is present for the input supply, the gate driver board powers ON only when the input voltage crosses the UVLO limits. Hysteresis is provided to avoid oscillations when the input voltage is close to the UVLO threshold.

UVLO is also present for internal bias supply. If the positive going gate voltage is less than the threshold limits the gate drive outputs are pulled to negative until the voltage levels are as per requirement. Hysteresis is provided to avoid oscillations when the input voltage is close to the UVLO threshold.

### On-Board Power Supplies

The gate driver board receives the 15V input and derives 3.3V and 11V using DC/DC buck converter for internal use.

### On-Board Floating Bias Supplies

The on-board isolated bias power supply is push-pull DC/DC converter with primary side pre-regulated input. There are four push-pull DC/DC converters on-board to provide high-side and low-side channels with the positive and negative supply voltages required to drive the switches. The bias supplies are also used to provide power to the isolation amplifier used for telemetry purposes.

### Drive Enable

The Drive Enable input interface from higher-level systems is based on low-voltage differential signaling (LVDS). These are provided to signal connector J11. This is used to enable/disable all gate drives by the higher-level system irrespective of the PWM inputs.

### PWM Inputs

The PWM input interface from higher-level systems is based on LVDS. These are provided to signal connector J11. The received PWM inputs are provided to the power switches through the isolated gate drive circuitry. All power switches on the SP6HPD are normally off when there are no PWM inputs.

### Shoot-Through Protection

Shoot-through protection is present in the gate drive for three-phase inverter bridge. This prevents the high-side and low-side switches of the inverter from being active at the same time.

### Short-circuit protection, Soft Turn Off

An internal desaturation (DESAT) fault detection recognizes when the Si IGBT/SiC MOSFET is in an overcurrent/short-circuit condition. Upon a DESAT detection, a mute logic immediately blocks the output of the isolator and initiates a soft turnoff procedure turning the IGBT off immediately. A fault signal is sent across the isolation barrier and blocks the isolator input. The fault output condition is latched and can be reset only by the Disable/Enable gate drive or 15V power OFF/ON. When the DESAT fault is detected, the power module gate is discharged by means of soft-shutdown circuit to avoid high di/dt at power module turn off.


© 2024 Microchip Technology Inc. and its subsidiaries

### Fault

All fault signals of individual gate channels are combined internally and are provided as one single FAULT signal to the higher-level system through J11 connector. The FAULT is active low output. The FAULT signal is permanently active following a Desat event. It is also active if the power supply to internal gate drivers is not healthy.

### Active Miller Clamping

In case of high positive dV/dt and despite the negative drive of the power module gate, a parasitic turn on of the gate could take place, inducing shoot through current on the power arm.

To prevent this, the gate driver board has Active Miller Clamping function.

### Telemetry

The driver board internally monitors the DC bus currents, phase currents, and solenoid currents from the respective shunt present in the SP6HPD power module. The driver board also internally monitors the DC bus voltage. Isolation amplifiers present in the driver board takes these monitored signals, amplifies, and provides isolated differential output for each of these measurements. These outputs are available in the J11 connector.

The temperature sensors output from SP6HPD are taken directly and given to the J11 connector for higher-level system monitoring. No processing is done inside the driver board circuitry.


© 2024 Microchip Technology Inc. and its subsidiaries

# 11. Revision History

| Revision | Date | Description |
|---|---|---|
| A | 02/2024 | Initial Version |


© 2024 Microchip Technology Inc. and its subsidiaries

# Microchip Information

## The Microchip Website

Microchip provides online support via our website at www.microchip.com/. This website is used to make files and information easily available to customers. Some of the content available includes:

- **Product Support** – Data sheets and errata, application notes and sample programs, design resources, user's guides and hardware support documents, latest software releases and archived software
- **General Technical Support** – Frequently Asked Questions (FAQs), technical support requests, online discussion groups, Microchip design partner program member listing
- **Business of Microchip** – Product selector and ordering guides, latest Microchip press releases, listing of seminars and events, listings of Microchip sales offices, distributors and factory representatives

## Product Change Notification Service

Microchip's product change notification service helps keep customers current on Microchip products. Subscribers will receive email notification whenever there are changes, updates, revisions or errata related to a specified product family or development tool of interest.

To register, go to www.microchip.com/pcn and follow the registration instructions.

## Customer Support

Users of Microchip products can receive assistance through several channels:

- Distributor or Representative
- Local Sales Office
- Embedded Solutions Engineer (ESE)
- Technical Support

Customers should contact their distributor, representative or ESE for support. Local sales offices are also available to help customers. A listing of sales offices and locations is included in this document.

Technical support is available through the website at: www.microchip.com/support

## Microchip Devices Code Protection Feature

Note the following details of the code protection feature on Microchip products:

- Microchip products meet the specifications contained in their particular Microchip Data Sheet.
- Microchip believes that its family of products is secure when used in the intended manner, within operating specifications, and under normal conditions.
- Microchip values and aggressively protects its intellectual property rights. Attempts to breach the code protection features of Microchip product is strictly prohibited and may violate the Digital Millennium Copyright Act.
- Neither Microchip nor any other semiconductor manufacturer can guarantee the security of its code. Code protection does not mean that we are guaranteeing the product is "unbreakable". Code protection is constantly evolving. Microchip is committed to continuously improving the code protection features of our products.

## Legal Notice

This publication and the information herein may be used only with Microchip products, including to design, test, and integrate Microchip products with your application. Use of this information in any other manner violates these terms. Information regarding device applications is provided only for your convenience and may be superseded by updates. It is your responsibility to ensure


© 2024 Microchip Technology Inc. and its subsidiaries

that your application meets with your specifications. Contact your local Microchip sales office for additional support or, obtain additional support at www.microchip.com/en-us/support/design-help/client-support-services.

THIS INFORMATION IS PROVIDED BY MICROCHIP "AS IS". MICROCHIP MAKES NO REPRESENTATIONS OR WARRANTIES OF ANY KIND WHETHER EXPRESS OR IMPLIED, WRITTEN OR ORAL, STATUTORY OR OTHERWISE, RELATED TO THE INFORMATION INCLUDING BUT NOT LIMITED TO ANY IMPLIED WARRANTIES OF NON-INFRINGEMENT, MERCHANTABILITY, AND FITNESS FOR A PARTICULAR PURPOSE, OR WARRANTIES RELATED TO ITS CONDITION, QUALITY, OR PERFORMANCE.

IN NO EVENT WILL MICROCHIP BE LIABLE FOR ANY INDIRECT, SPECIAL, PUNITIVE, INCIDENTAL, OR CONSEQUENTIAL LOSS, DAMAGE, COST, OR EXPENSE OF ANY KIND WHATSOEVER RELATED TO THE INFORMATION OR ITS USE, HOWEVER CAUSED, EVEN IF MICROCHIP HAS BEEN ADVISED OF THE POSSIBILITY OR THE DAMAGES ARE FORESEEABLE. TO THE FULLEST EXTENT ALLOWED BY LAW, MICROCHIP'S TOTAL LIABILITY ON ALL CLAIMS IN ANY WAY RELATED TO THE INFORMATION OR ITS USE WILL NOT EXCEED THE AMOUNT OF FEES, IF ANY, THAT YOU HAVE PAID DIRECTLY TO MICROCHIP FOR THE INFORMATION.

Use of Microchip devices in life support and/or safety applications is entirely at the buyer's risk, and the buyer agrees to defend, indemnify and hold harmless Microchip from any and all damages, claims, suits, or expenses resulting from such use. No licenses are conveyed, implicitly or otherwise, under any Microchip intellectual property rights unless otherwise stated.

## Trademarks

The Microchip name and logo, the Microchip logo, Adaptec, AVR, AVR logo, AVR Freaks, BesTime, BitCloud, CryptoMemory, CryptoRF, dsPIC, flexPWR, HELDO, IGLOO, JukeBlox, KeeLoq, Kleer, LANCheck, LinkMD, maXStylus, maXTouch, MediaLB, megaAVR, Microsemi, Microsemi logo, MOST, MOST logo, MPLAB, OptoLyzer, PIC, picoPower, PICSTART, PIC32 logo, PolarFire, Prochip Designer, QTouch, SAM-BA, SenGenuity, SpyNIC, SST, SST Logo, SuperFlash, Symmetricom, SyncServer, Tachyon, TimeSource, tinyAVR, UNI/O, Vectron, and XMEGA are registered trademarks of Microchip Technology Incorporated in the U.S.A. and other countries.

AgileSwitch, ClockWorks, The Embedded Control Solutions Company, EtherSynch, Flashtec, Hyper Speed Control, HyperLight Load, Libero, motorBench, mTouch, Powermite 3, Precision Edge, ProASIC, ProASIC Plus, ProASIC Plus logo, Quiet-Wire, SmartFusion, SyncWorld, TimeCesium, TimeHub, TimePictra, TimeProvider, and ZL are registered trademarks of Microchip Technology Incorporated in the U.S.A.

Adjacent Key Suppression, AKS, Analog-for-the-Digital Age, Any Capacitor, AnyIn, AnyOut, Augmented Switching, BlueSky, BodyCom, Clockstudio, CodeGuard, CryptoAuthentication, CryptoAutomotive, CryptoCompanion, CryptoController, dsPICDEM, dsPICDEM.net, Dynamic Average Matching, DAM, ECAN, Espresso T1S, EtherGREEN, EyeOpen, GridTime, IdealBridge, IGaT, In-Circuit Serial Programming, ICSP, INICnet, Intelligent Paralleling, IntelliMOS, Inter-Chip Connectivity, JitterBlocker, Knob-on-Display, MarginLink, maxCrypto, maxView, memBrain, Mindi, MiWi, MPASM, MPF, MPLAB Certified logo, MPLIB, MPLINK, mSiC, MultiTRAK, NetDetach, Omniscient Code Generation, PICDEM, PICDEM.net, PICkit, PICtail, Power MOS IV, Power MOS 7, PowerSmart, PureSilicon, QMatrix, REAL ICE, Ripple Blocker, RTAX, RTG4, SAM-ICE, Serial Quad I/O, simpleMAP, SimpliPHY, SmartBuffer, SmartHLS, SMART-I.S., storClad, SQI, SuperSwitcher, SuperSwitcher II, Switchtec, SynchroPHY, Total Endurance, Trusted Time, TSHARC, Turing, USBCheck, VariSense, VectorBlox, VeriPHY, ViewSpan, WiperLock, XpressConnect, and ZENA are trademarks of Microchip Technology Incorporated in the U.S.A. and other countries.

SQTP is a service mark of Microchip Technology Incorporated in the U.S.A.

The Adaptec logo, Frequency on Demand, Silicon Storage Technology, and Symmcom are registered trademarks of Microchip Technology Inc. in other countries.

GestIC is a registered trademark of Microchip Technology Germany II GmbH & Co. KG, a subsidiary of Microchip Technology Inc., in other countries.


© 2024 Microchip Technology Inc. and its subsidiaries

All other trademarks mentioned herein are property of their respective companies.

© 2024, Microchip Technology Incorporated and its subsidiaries. All Rights Reserved.

ISBN: 978-1-6683-4067-7

## Quality Management System

For information regarding Microchip's Quality Management Systems, please visit www.microchip.com/quality.

# Worldwide Sales and Service

| AMERICAS | ASIA/PACIFIC | ASIA/PACIFIC | EUROPE |
|---|---|---|---|
| **Corporate Office** | **Australia - Sydney** | **India - Bangalore** | **Austria - Wels** |
| 2355 West Chandler Blvd. | Tel: 61-2-9868-6733 | Tel: 91-80-3090-4444 | Tel: 43-7242-2244-39 |
| Chandler, AZ 85224-6199 | **China - Beijing** | **India - New Delhi** | Fax: 43-7242-2244-393 |
| Tel: 480-792-7200 | Tel: 86-10-8569-7000 | Tel: 91-11-4160-8631 | **Denmark - Copenhagen** |
| Fax: 480-792-7277 | **China - Chengdu** | **India - Pune** | Tel: 45-4485-5910 |
| Technical Support: | Tel: 86-28-8665-5511 | Tel: 91-20-4121-0141 | Fax: 45-4485-2829 |
| www.microchip.com/support | **China - Chongqing** | **Japan - Osaka** | **Finland - Espoo** |
| Web Address: | Tel: 86-23-8980-9588 | Tel: 81-6-6152-7160 | Tel: 358-9-4520-820 |
| www.microchip.com | **China - Dongguan** | **Japan - Tokyo** | **France - Paris** |
| **Atlanta** | Tel: 86-769-8702-9880 | Tel: 81-3-6880- 3770 | Tel: 33-1-69-53-63-20 |
| Duluth, GA | **China - Guangzhou** | **Korea - Daegu** | Fax: 33-1-69-30-90-79 |
| Tel: 678-957-9614 | Tel: 86-20-8755-8029 | Tel: 82-53-744-4301 | **Germany - Garching** |
| Fax: 678-957-1455 | **China - Hangzhou** | **Korea - Seoul** | Tel: 49-8931-9700 |
| **Austin, TX** | Tel: 86-571-8792-8115 | Tel: 82-2-554-7200 | **Germany - Haan** |
| Tel: 512-257-3370 | **China - Hong Kong SAR** | **Malaysia - Kuala Lumpur** | Tel: 49-2129-3766400 |
| **Boston** | Tel: 852-2943-5100 | Tel: 60-3-7651-7906 | **Germany - Heilbronn** |
| Westborough, MA | **China - Nanjing** | **Malaysia - Penang** | Tel: 49-7131-72400 |
| Tel: 774-760-0087 | Tel: 86-25-8473-2460 | Tel: 60-4-227-8870 | **Germany - Karlsruhe** |
| Fax: 774-760-0088 | **China - Qingdao** | **Philippines - Manila** | Tel: 49-721-625370 |
| **Chicago** | Tel: 86-532-8502-7355 | Tel: 63-2-634-9065 | **Germany - Munich** |
| Itasca, IL | **China - Shanghai** | **Singapore** | Tel: 49-89-627-144-0 |
| Tel: 630-285-0071 | Tel: 86-21-3326-8000 | Tel: 65-6334-8870 | Fax: 49-89-627-144-44 |
| Fax: 630-285-0075 | **China - Shenyang** | **Taiwan - Hsin Chu** | **Germany - Rosenheim** |
| **Dallas** | Tel: 86-24-2334-2829 | Tel: 886-3-577-8366 | Tel: 49-8031-354-560 |
| Addison, TX | **China - Shenzhen** | **Taiwan - Kaohsiung** | **Israel - Ra'anana** |
| Tel: 972-818-7423 | Tel: 86-755-8864-2200 | Tel: 886-7-213-7830 | Tel: 972-9-744-7705 |
| Fax: 972-818-2924 | **China - Suzhou** | **Taiwan - Taipei** | **Italy - Milan** |
| **Detroit** | Tel: 86-186-6233-1526 | Tel: 886-2-2508-8600 | Tel: 39-0331-742611 |
| Novi, MI | **China - Wuhan** | **Thailand - Bangkok** | Fax: 39-0331-466781 |
| Tel: 248-848-4000 | Tel: 86-27-5980-5300 | Tel: 66-2-694-1351 | **Italy - Padova** |
| **Houston, TX** | **China - Xian** | **Vietnam - Ho Chi Minh** | Tel: 39-049-7625286 |
| Tel: 281-894-5983 | Tel: 86-29-8833-7252 | Tel: 84-28-5448-2100 | **Netherlands - Drunen** |
| **Indianapolis** | **China - Xiamen** | | Tel: 31-416-690399 |
| Noblesville, IN | Tel: 86-592-2388138 | | Fax: 31-416-690340 |
| Tel: 317-773-8323 | **China - Zhuhai** | | **Norway - Trondheim** |
| Fax: 317-773-5453 | Tel: 86-756-3210040 | | Tel: 47-72884388 |
| Tel: 317-536-2380 | | | **Poland - Warsaw** |
| **Los Angeles** | | | Tel: 48-22-3325737 |
| Mission Viejo, CA | | | **Romania - Bucharest** |
| Tel: 949-462-9523 | | | Tel: 40-21-407-87-50 |
| Fax: 949-462-9608 | | | **Spain - Madrid** |
| Tel: 951-273-7800 | | | Tel: 34-91-708-08-90 |
| **Raleigh, NC** | | | Fax: 34-91-708-08-91 |
| Tel: 919-844-7510 | | | **Sweden - Gothenberg** |
| **New York, NY** | | | Tel: 46-31-704-60-40 |
| Tel: 631-435-6000 | | | **Sweden - Stockholm** |
| **San Jose, CA** | | | Tel: 46-8-5090-4654 |
| Tel: 408-735-9110 | | | **UK - Wokingham** |
| Tel: 408-436-4270 | | | Tel: 44-118-921-5800 |
| **Canada - Toronto** | | | Fax: 44-118-921-5820 |
| Tel: 905-695-1980 | | | |
| Fax: 905-695-2078 | | | |


© 2024 Microchip Technology Inc. and its subsidiaries