SF200-28-28S EMI Filter

Introduction

The SF200 is a MIL-STD-461 add-on EMI filter for one to four SA50-28 (28V input) isolated DC-to-DC converters. The SA50-28 modules do not have a full EMI filter built in, and thus require an external filter. Up to four SA50-28 modules may be connected to a single SF200-28-28S.

The SF200-28-28S is available in a 3.055” x 2.055” x 0.5” package. (The same footprint as the SA50 series modules.)

Benefits and Features

- Up to four SA50-28 modules may be connected
- 20 VDC to 40 VDC input range
- Currents up to 13A
- Low mass. 82g nominal
- Space flight proven technology
- This product is classified as EAR99

Radiation Performance

- No active components used. Passive components only (inherently radiation hard)

© 2023 Microchip Technology Inc. and its subsidiaries

Table of Contents

Introduction....1

1. Typical Application Circuit....3
2. Absolute Maximum Ratings....4
3. Performance Characteristics....5
4. Pin Configuration....6
5. Pin Description....7
6. Mechanical Outline – Axial Pins Package....8
7. Mechanical Outline – Radial Pins Package....10
8. ATP Screening Test –(H) Radiation Hardened....12
9. Ordering Information....13
10. Revision History....14

Microchip Information....15

- The Microchip Website....15
- Product Change Notification Service....15
- Customer Support....15
- Microchip Devices Code Protection Feature....15
- Legal Notice....15
- Trademarks....16
- Quality Management System....17
- Worldwide Sales and Service....18

© 2023 Microchip Technology Inc. and its subsidiaries

1. Typical Application Circuit

Figure 1-1. SF200-28-28S Typical Application Circuit

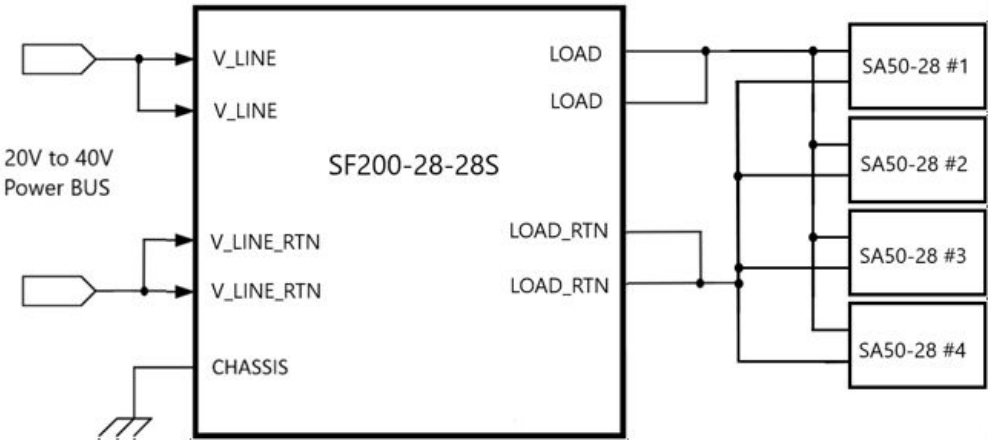

© 2023 Microchip Technology Inc. and its subsidiaries

2. Absolute Maximum Ratings

Rating	Value
V_{IN} range	–0.5 VDC to 60 VDC
Current	13A
Lead temperature	300 °C for 10 s
Operating temperature	–55 °C to 125 °C
Storage temperature	–55 °C to 125 °C
Shock	1500 g_{pk}, 0.5 ms, ½ sine
Constant acceleration	50 g
Random vibration	24.06 g_{rms}, 50 Hz to 2000 Hz

© 2023 Microchip Technology Inc. and its subsidiaries

3. Performance Characteristics

This section shows the electrical parameters of the SF200-28-28S series device under the following conditions unless otherwise specified:

Parameter	Output	Conditions	Min	Nom	Max	Units
Input Voltage						
(Vin)	—	—	20	28	40	V
DC Resistance						
(R)	—	—	—	25	—	mΩ
Filter Attenuation						
—	—	@325 kHz, I_{out} =100% rated load	—	60	—	dB
Isolation						
All pins to chassis	—	@25 °C and 100V all pins: (1, 2, 4, 5, 7, 8, 11, 12) to chassis (6)	100	—	—	MΩ
Mass						
—	—	Case types A, B	—	82	—	g

© 2023 Microchip Technology Inc. and its subsidiaries

4. Pin Configuration

Figure 4-1. SF200-28-28S Pin Configuration

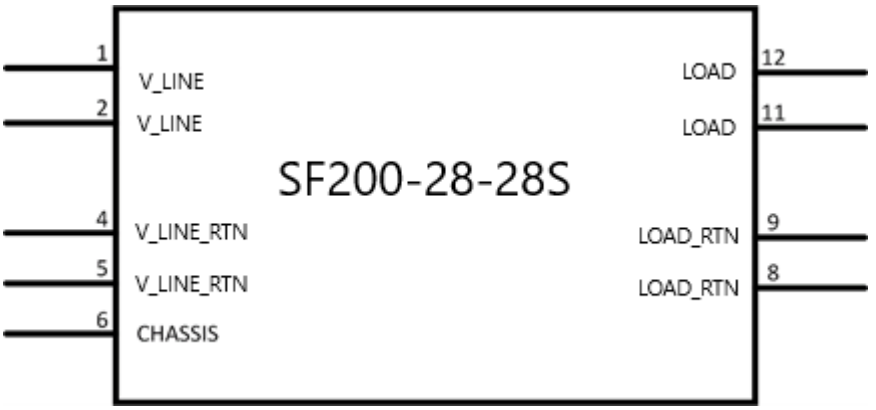

© 2023 Microchip Technology Inc. and its subsidiaries

5. Pin Description

Pin	Name	Description
1	V_LINE	Line voltage input
2	V_LINE	Line voltage input
3	—	Unused
4	V_LINE_RTN	Line voltage input return
5	V_LINE_RTN	Line voltage input return
6	CHASSIS	Chassis return
7	—	Unused
8	LOAD_RTN	Load voltage output return
9	LOAD_RTN	Load voltage output return
10	—	Unused
11	LOAD	Load voltage output
12	LOAD	Load voltage output

© 2023 Microchip Technology Inc. and its subsidiaries

6. Mechanical Outline – Axial Pins Package

Figure 6-1. Axial Pins and Thru-Hole Tabs Package (-A)

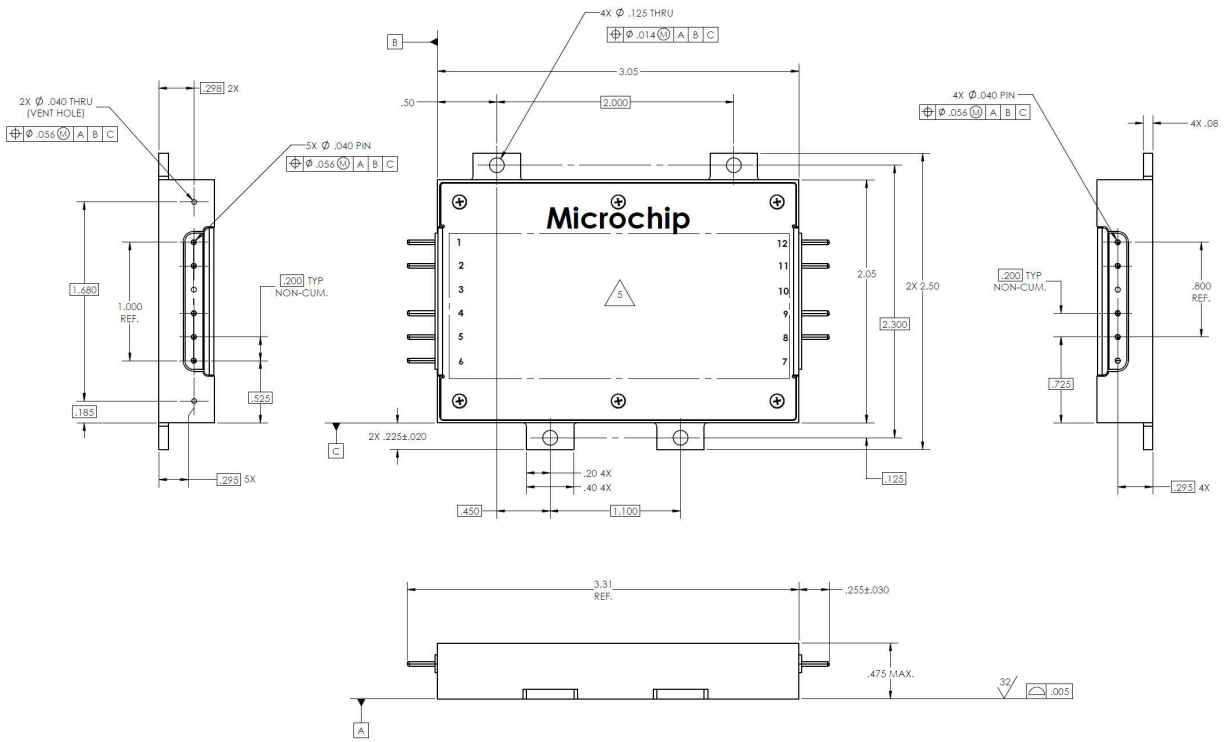

© 2023 Microchip Technology Inc. and its subsidiaries

Figure 6-2. Axial Pins and Threaded Tabs Package Bottom View (-C or -E)

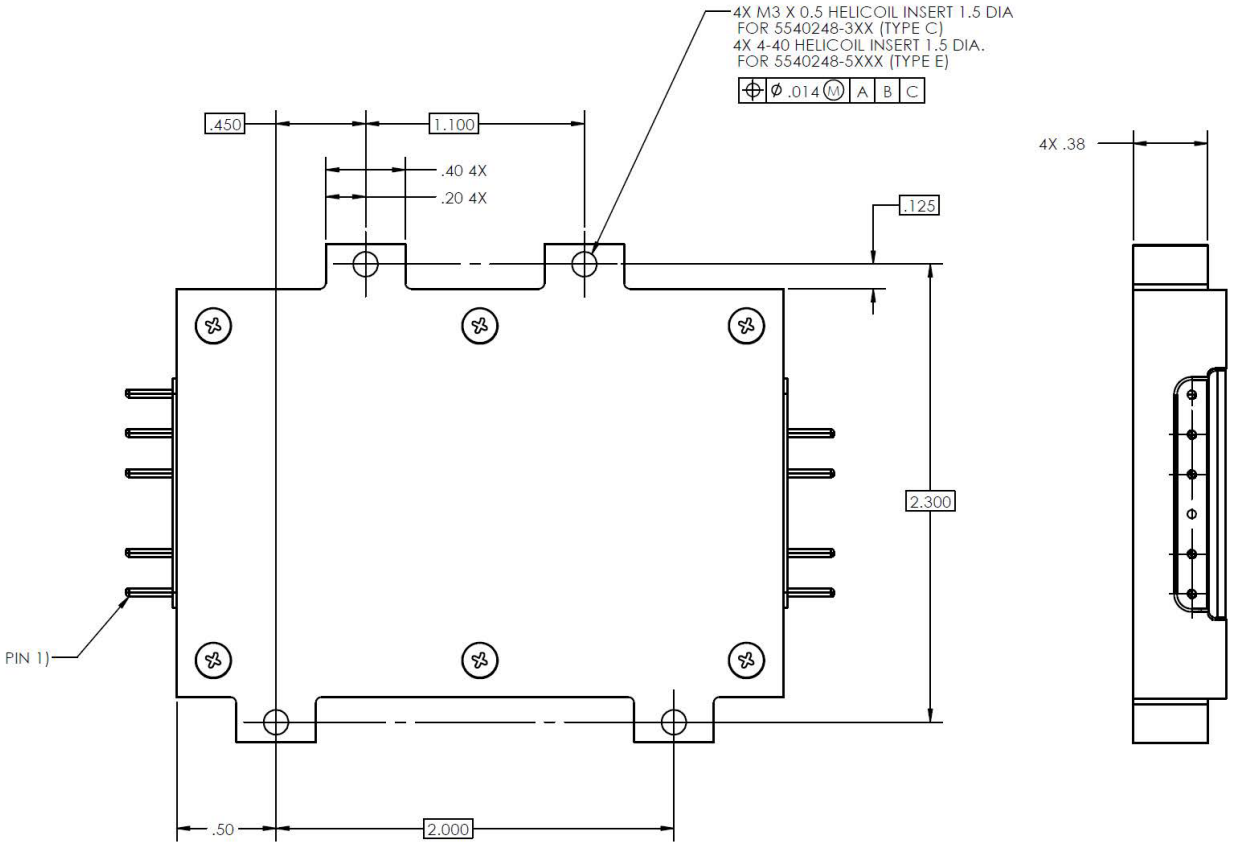

© 2023 Microchip Technology Inc. and its subsidiaries

7. Mechanical Outline – Radial Pins Package

Figure 7-1. Radial Pins and Thru-Hole Tabs Package (-D)

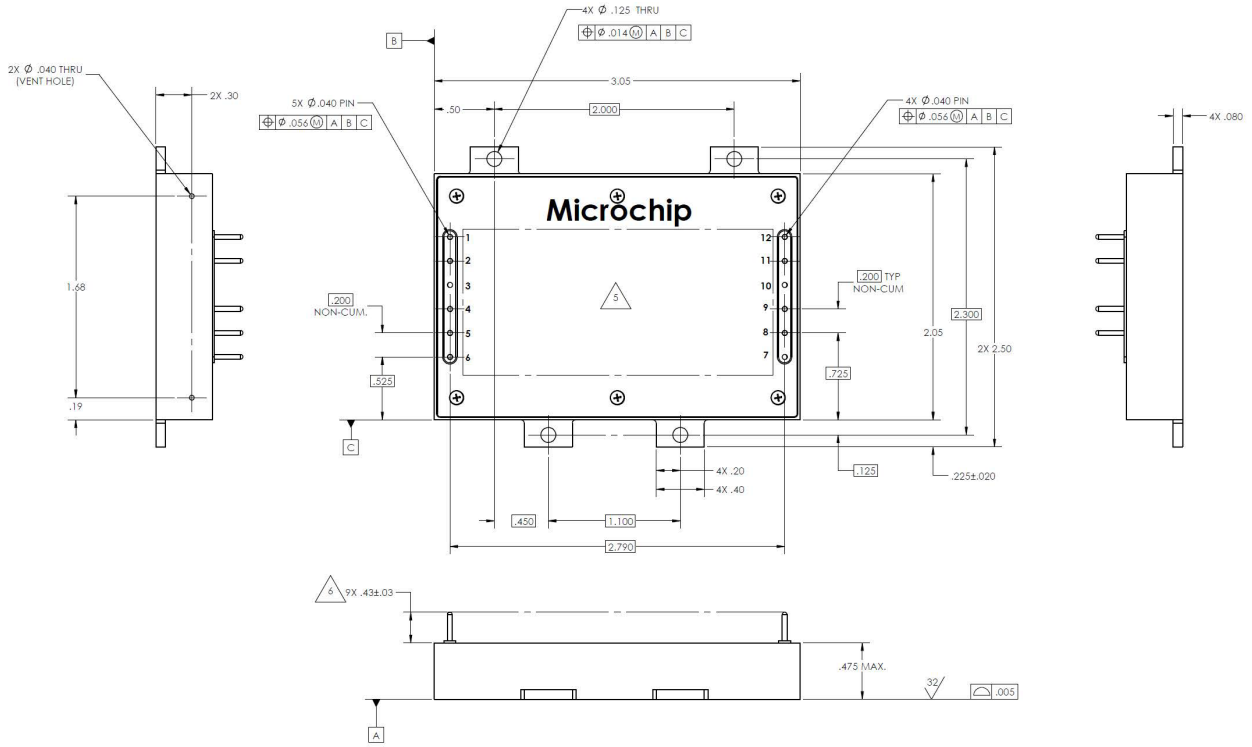

© 2023 Microchip Technology Inc. and its subsidiaries

Figure 7-2. Radial Pins and Threaded Tabs Package Bottom View (-B or -F)

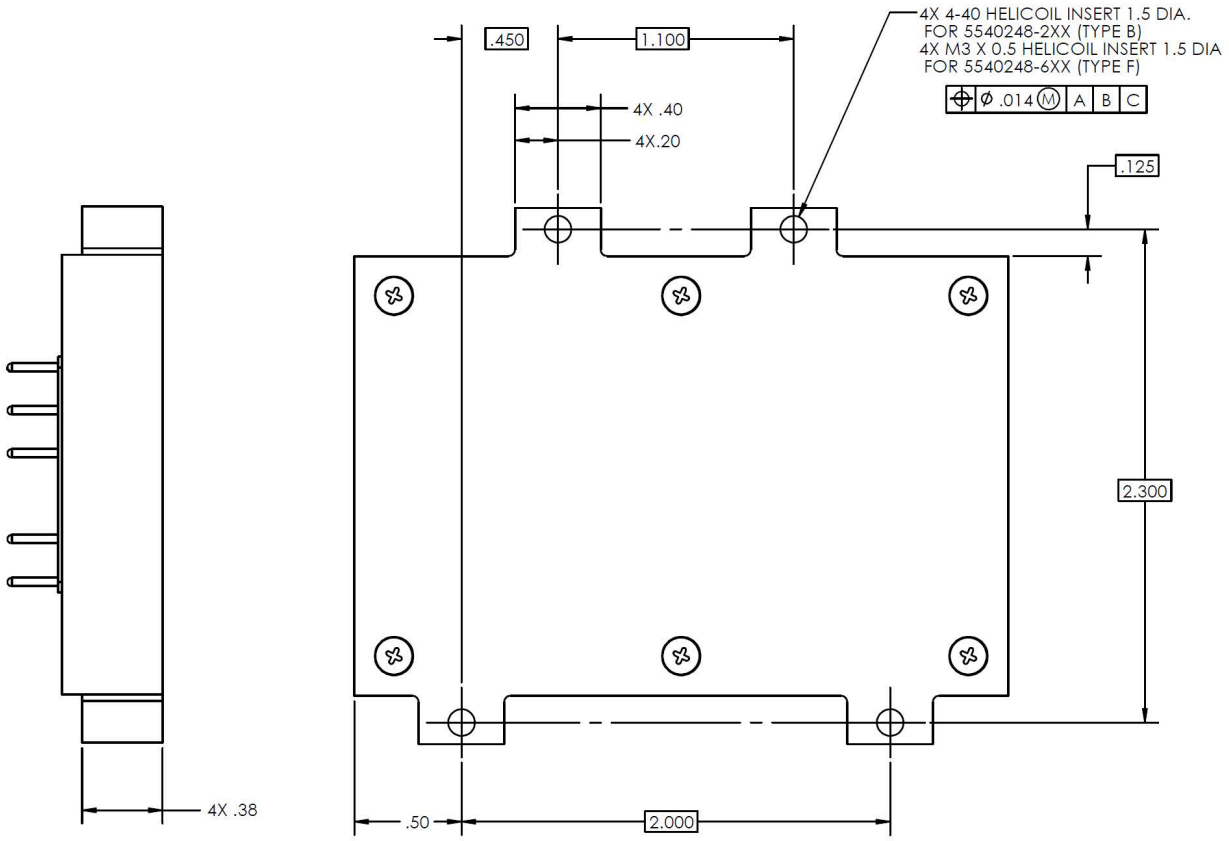

© 2023 Microchip Technology Inc. and its subsidiaries

8. ATP Screening Test –(H) Radiation Hardened

Requirement	Test Method/Condition
External Visual	O&M – dimensions and mass
Initial Electrical	Full performance at +25 °C
Vibration	Workmanship non-operating vibration. MIL-STD-202, Method 214, Condition II-A, 6.21 grms random vibration, 50–2000 Hz, 1-minute perpendicular to the board
Post Vibration Electrical	Full performance at +25 °C
Temperature Cycle	MIL-STD-883, Method 1010, Condition A, **1 cycle**, +85 °C to –55 °C, operating outputs monitored during thermal cycles
Burn-in	**40 Hrs** at 105 °C, 50% of rated load (outputs monitored)
Final Electrical	Full performance at +25 °C (deliverable data)
External Visual	No damage

© 2023 Microchip Technology Inc. and its subsidiaries

9. Ordering Information

The following chart defines the part number nomenclature.

Figure 9-1. Part Number Example

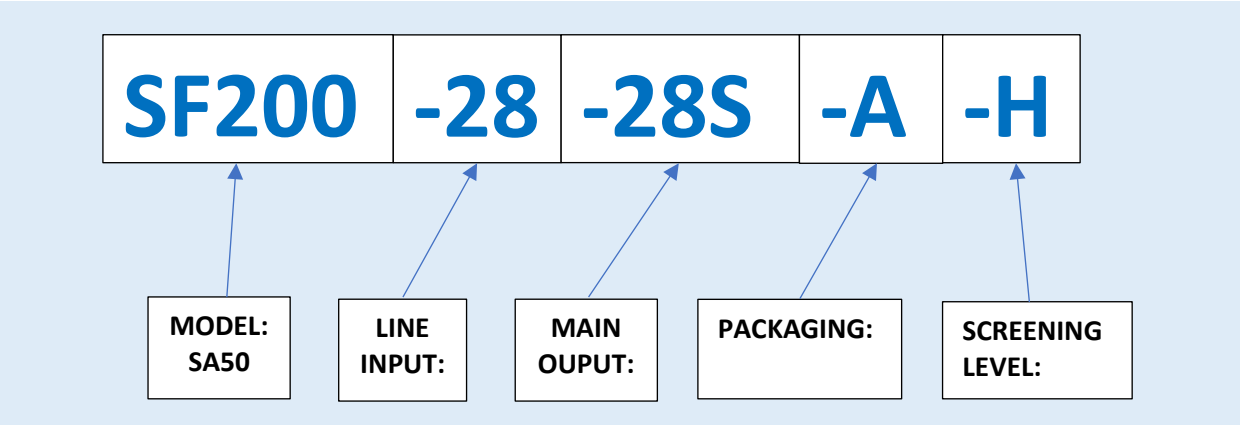

Example part number: **SF200-28-28S-A-H**

Model	SF200-28-28S	Standard Filter 200W 28V input, 28V output modules		
Mechanical Package	-A	Axial	0.125in through	Mechanical packaging options. Electrical connections are either through the Top or the Side. And mounting holes are drilled through or tapped.
	-B	Radial	4-40 thread	
	-C	Axial	M3 thread	
	-D	Radial	0.125in through	
	-E	Axial	4-40 thread	
	-F	Radial	M3 thread	
Screening	-H	Standard screening		

We offer a thermal interface, the ST-2X3. This is a non-silicon, space-approved thermal interface, Datasheet available upon request.

© 2023 Microchip Technology Inc. and its subsidiaries

10. Revision History

The revision history describes the changes that were implemented in the document. The changes are listed by revision, starting with the most current publication.

Revision	Date	Description
B	08/2023	• Updated filter attenuation information in Performance Characteristics. • Updated Mechanical Outline – Axial Pins Package and Mechanical Outline – Radial Pins Package. • Updated vibration information in ATP Screening Test –(H) Radiation Hardened Requirement. • Made grammar and style updates throughout the document.
A	11/2021	Initial Revision

© 2023 Microchip Technology Inc. and its subsidiaries

Microchip Information

The Microchip Website

Microchip provides online support via our website at www.microchip.com/. This website is used to make files and information easily available to customers. Some of the content available includes:

- **Product Support** – Data sheets and errata, application notes and sample programs, design resources, user's guides and hardware support documents, latest software releases and archived software
- **General Technical Support** – Frequently Asked Questions (FAQs), technical support requests, online discussion groups, Microchip design partner program member listing
- **Business of Microchip** – Product selector and ordering guides, latest Microchip press releases, listing of seminars and events, listings of Microchip sales offices, distributors and factory representatives

Product Change Notification Service

Microchip's product change notification service helps keep customers current on Microchip products. Subscribers will receive email notification whenever there are changes, updates, revisions or errata related to a specified product family or development tool of interest.

To register, go to www.microchip.com/pcn and follow the registration instructions.

Customer Support

Users of Microchip products can receive assistance through several channels:

- Distributor or Representative
- Local Sales Office
- Embedded Solutions Engineer (ESE)
- Technical Support

Customers should contact their distributor, representative or ESE for support. Local sales offices are also available to help customers. A listing of sales offices and locations is included in this document.

Technical support is available through the website at: www.microchip.com/support

Microchip Devices Code Protection Feature

Note the following details of the code protection feature on Microchip products:

- Microchip products meet the specifications contained in their particular Microchip Data Sheet.
- Microchip believes that its family of products is secure when used in the intended manner, within operating specifications, and under normal conditions.
- Microchip values and aggressively protects its intellectual property rights. Attempts to breach the code protection features of Microchip product is strictly prohibited and may violate the Digital Millennium Copyright Act.
- Neither Microchip nor any other semiconductor manufacturer can guarantee the security of its code. Code protection does not mean that we are guaranteeing the product is "unbreakable". Code protection is constantly evolving. Microchip is committed to continuously improving the code protection features of our products.

Legal Notice

This publication and the information herein may be used only with Microchip products, including to design, test, and integrate Microchip products with your application. Use of this information in any other manner violates these terms. Information regarding device applications is provided only for your convenience and may be superseded by updates. It is your responsibility to ensure

© 2023 Microchip Technology Inc. and its subsidiaries

that your application meets with your specifications. Contact your local Microchip sales office for additional support or, obtain additional support at www.microchip.com/en-us/support/design-help/client-support-services.

THIS INFORMATION IS PROVIDED BY MICROCHIP "AS IS". MICROCHIP MAKES NO REPRESENTATIONS OR WARRANTIES OF ANY KIND WHETHER EXPRESS OR IMPLIED, WRITTEN OR ORAL, STATUTORY OR OTHERWISE, RELATED TO THE INFORMATION INCLUDING BUT NOT LIMITED TO ANY IMPLIED WARRANTIES OF NON-INFRINGEMENT, MERCHANTABILITY, AND FITNESS FOR A PARTICULAR PURPOSE, OR WARRANTIES RELATED TO ITS CONDITION, QUALITY, OR PERFORMANCE.

IN NO EVENT WILL MICROCHIP BE LIABLE FOR ANY INDIRECT, SPECIAL, PUNITIVE, INCIDENTAL, OR CONSEQUENTIAL LOSS, DAMAGE, COST, OR EXPENSE OF ANY KIND WHATSOEVER RELATED TO THE INFORMATION OR ITS USE, HOWEVER CAUSED, EVEN IF MICROCHIP HAS BEEN ADVISED OF THE POSSIBILITY OR THE DAMAGES ARE FORESEEABLE. TO THE FULLEST EXTENT ALLOWED BY LAW, MICROCHIP'S TOTAL LIABILITY ON ALL CLAIMS IN ANY WAY RELATED TO THE INFORMATION OR ITS USE WILL NOT EXCEED THE AMOUNT OF FEES, IF ANY, THAT YOU HAVE PAID DIRECTLY TO MICROCHIP FOR THE INFORMATION.

Use of Microchip devices in life support and/or safety applications is entirely at the buyer's risk, and the buyer agrees to defend, indemnify and hold harmless Microchip from any and all damages, claims, suits, or expenses resulting from such use. No licenses are conveyed, implicitly or otherwise, under any Microchip intellectual property rights unless otherwise stated.

Trademarks

The Microchip name and logo, the Microchip logo, Adaptec, AVR, AVR logo, AVR Freaks, BesTime, BitCloud, CryptoMemory, CryptoRF, dsPIC, flexPWR, HELDO, IGLOO, JukeBlox, KeeLoq, Kleer, LANCheck, LinkMD, maXStylus, maXTouch, MediaLB, megaAVR, Microsemi, Microsemi logo, MOST, MOST logo, MPLAB, OptoLyzer, PIC, picoPower, PICSTART, PIC32 logo, PolarFire, Prochip Designer, QTouch, SAM-BA, SenGenuity, SpyNIC, SST, SST Logo, SuperFlash, Symmetricom, SyncServer, Tachyon, TimeSource, tinyAVR, UNI/O, Vectron, and XMEGA are registered trademarks of Microchip Technology Incorporated in the U.S.A. and other countries.

AgileSwitch, APT, ClockWorks, The Embedded Control Solutions Company, EtherSynch, Flashtec, Hyper Speed Control, HyperLight Load, Libero, motorBench, mTouch, Powermite 3, Precision Edge, ProASIC, ProASIC Plus, ProASIC Plus logo, Quiet- Wire, SmartFusion, SyncWorld, Temux, TimeCesium, TimeHub, TimePictra, TimeProvider, TrueTime, and ZL are registered trademarks of Microchip Technology Incorporated in the U.S.A.

Adjacent Key Suppression, AKS, Analog-for-the-Digital Age, Any Capacitor, AnyIn, AnyOut, Augmented Switching, BlueSky, BodyCom, Clockstudio, CodeGuard, CryptoAuthentication, CryptoAutomotive, CryptoCompanion, CryptoController, dsPICDEM, dsPICDEM.net, Dynamic Average Matching, DAM, ECAN, Espresso T1S, EtherGREEN, GridTime, IdealBridge, In-Circuit Serial Programming, ICSP, INICnet, Intelligent Paralleling, IntelliMOS, Inter-Chip Connectivity, JitterBlocker, Knob-on-Display, KoD, maxCrypto, maxView, memBrain, Mindi, MiWi, MPASM, MPF, MPLAB Certified logo, MPLIB, MPLINK, MultiTRAK, NetDetach, Omniscient Code Generation, PICDEM, PICDEM.net, PICkit, PICtail, PowerSmart, PureSilicon, QMatrix, REAL ICE, Ripple Blocker, RTAX, RTG4, SAM-ICE, Serial Quad I/O, simpleMAP, SimpliPHY, SmartBuffer, SmartHLS, SMART-I.S., storClad, SQI, SuperSwitcher, SuperSwitcher II, Switchtec, SynchroPHY, Total Endurance, Trusted Time, TSHARC, USBCheck, VariSense, VectorBlox, VeriPHY, ViewSpan, WiperLock, XpressConnect, and ZENA are trademarks of Microchip Technology Incorporated in the U.S.A. and other countries.

SQTP is a service mark of Microchip Technology Incorporated in the U.S.A.

The Adaptec logo, Frequency on Demand, Silicon Storage Technology, and Symmcom are registered trademarks of Microchip Technology Inc. in other countries.

GestIC is a registered trademark of Microchip Technology Germany II GmbH & Co. KG, a subsidiary of Microchip Technology Inc., in other countries.

All other trademarks mentioned herein are property of their respective companies.

© 2023 Microchip Technology Inc. and its subsidiaries

© 2023, Microchip Technology Incorporated and its subsidiaries. All Rights Reserved.

ISBN: 978-1-6683-2936-8

Quality Management System

For information regarding Microchip's Quality Management Systems, please visit www.microchip.com/quality.

Worldwide Sales and Service

AMERICAS	ASIA/PACIFIC	ASIA/PACIFIC	EUROPE
Corporate Office	**Australia - Sydney**	**India - Bangalore**	**Austria - Wels**
2355 West Chandler Blvd.	Tel: 61-2-9868-6733	Tel: 91-80-3090-4444	Tel: 43-7242-2244-39
Chandler, AZ 85224-6199	**China - Beijing**	**India - New Delhi**	Fax: 43-7242-2244-393
Tel: 480-792-7200	Tel: 86-10-8569-7000	Tel: 91-11-4160-8631	**Denmark - Copenhagen**
Fax: 480-792-7277	**China - Chengdu**	**India - Pune**	Tel: 45-4485-5910
Technical Support:	Tel: 86-28-8665-5511	Tel: 91-20-4121-0141	Fax: 45-4485-2829
www.microchip.com/support	**China - Chongqing**	**Japan - Osaka**	**Finland - Espoo**
Web Address:	Tel: 86-23-8980-9588	Tel: 81-6-6152-7160	Tel: 358-9-4520-820
www.microchip.com	**China - Dongguan**	**Japan - Tokyo**	**France - Paris**
Atlanta	Tel: 86-769-8702-9880	Tel: 81-3-6880- 3770	Tel: 33-1-69-53-63-20
Duluth, GA	**China - Guangzhou**	**Korea - Daegu**	Fax: 33-1-69-30-90-79
Tel: 678-957-9614	Tel: 86-20-8755-8029	Tel: 82-53-744-4301	**Germany - Garching**
Fax: 678-957-1455	**China - Hangzhou**	**Korea - Seoul**	Tel: 49-8931-9700
Austin, TX	Tel: 86-571-8792-8115	Tel: 82-2-554-7200	**Germany - Haan**
Tel: 512-257-3370	**China - Hong Kong SAR**	**Malaysia - Kuala Lumpur**	Tel: 49-2129-3766400
Boston	Tel: 852-2943-5100	Tel: 60-3-7651-7906	**Germany - Heilbronn**
Westborough, MA	**China - Nanjing**	**Malaysia - Penang**	Tel: 49-7131-72400
Tel: 774-760-0087	Tel: 86-25-8473-2460	Tel: 60-4-227-8870	**Germany - Karlsruhe**
Fax: 774-760-0088	**China - Qingdao**	**Philippines - Manila**	Tel: 49-721-625370
Chicago	Tel: 86-532-8502-7355	Tel: 63-2-634-9065	**Germany - Munich**
Itasca, IL	**China - Shanghai**	**Singapore**	Tel: 49-89-627-144-0
Tel: 630-285-0071	Tel: 86-21-3326-8000	Tel: 65-6334-8870	Fax: 49-89-627-144-44
Fax: 630-285-0075	**China - Shenyang**	**Taiwan - Hsin Chu**	**Germany - Rosenheim**
Dallas	Tel: 86-24-2334-2829	Tel: 886-3-577-8366	Tel: 49-8031-354-560
Addison, TX	**China - Shenzhen**	**Taiwan - Kaohsiung**	**Israel - Ra'anana**
Tel: 972-818-7423	Tel: 86-755-8864-2200	Tel: 886-7-213-7830	Tel: 972-9-744-7705
Fax: 972-818-2924	**China - Suzhou**	**Taiwan - Taipei**	**Italy - Milan**
Detroit	Tel: 86-186-6233-1526	Tel: 886-2-2508-8600	Tel: 39-0331-742611
Novi, MI	**China - Wuhan**	**Thailand - Bangkok**	Fax: 39-0331-466781
Tel: 248-848-4000	Tel: 86-27-5980-5300	Tel: 66-2-694-1351	**Italy - Padova**
Houston, TX	**China - Xian**	**Vietnam - Ho Chi Minh**	Tel: 39-049-7625286
Tel: 281-894-5983	Tel: 86-29-8833-7252	Tel: 84-28-5448-2100	**Netherlands - Drunen**
Indianapolis	**China - Xiamen**		Tel: 31-416-690399
Noblesville, IN	Tel: 86-592-2388138		Fax: 31-416-690340
Tel: 317-773-8323	**China - Zhuhai**		**Norway - Trondheim**
Fax: 317-773-5453	Tel: 86-756-3210040		Tel: 47-72884388
Tel: 317-536-2380			**Poland - Warsaw**
Los Angeles			Tel: 48-22-3325737
Mission Viejo, CA			**Romania - Bucharest**
Tel: 949-462-9523			Tel: 40-21-407-87-50
Fax: 949-462-9608			**Spain - Madrid**
Tel: 951-273-7800			Tel: 34-91-708-08-90
Raleigh, NC			Fax: 34-91-708-08-91
Tel: 919-844-7510			**Sweden - Gothenberg**
New York, NY			Tel: 46-31-704-60-40
Tel: 631-435-6000			**Sweden - Stockholm**
San Jose, CA			Tel: 46-8-5090-4654
Tel: 408-735-9110			**UK - Wokingham**
Tel: 408-436-4270			Tel: 44-118-921-5800
Canada - Toronto			Fax: 44-118-921-5820
Tel: 905-695-1980			
Fax: 905-695-2078			

© 2023 Microchip Technology Inc. and its subsidiaries