PIC32MX1XX/2XX/5XX 64/100-PIN

32-bit Microcontrollers (up to 512 KB Flash and 64 KB SRAM) with Audio/Graphics/Touch (HMI), CAN, USB, and Advanced Analog

Operating Conditions

- 2.3V to 3.6V, -40ºC to +105ºC (DC to 40 MHz), -40ºC to +85ºC (DC to 50 MHz)

Core: 50 MHz/83 DMIPS MIPS32® M4K®

- MIPS16e® mode for up to 40% smaller code size
- Code-efficient (C and Assembly) architecture
- Single-cycle (MAC) 32x16 and two-cycle 32x32 multiply

Clock Management

- 0.9% internal oscillator
- Programmable PLLs and oscillator clock sources
- Fail-Safe Clock Monitor (FSCM)
- Independent Watchdog Timer
- Fast wake-up and start-up

Power Management

- Low-power management modes (Sleep and Idle)
- Integrated Power-on Reset, Brown-out Reset, and High Voltage Detect
- 0.5 mA/MHz dynamic current (typical)
- 44 µA I_{PD} current (typical)

Audio/Graphics/Touch HMI Features

- External graphics interface with up to 34 PMP pins
- Audio data communication: I^2S, LJ, RJ, USB
- Audio data control interface: SPI and I^2C
- Audio data master clock:
  - Generation of fractional clock frequencies
  - Can be synchronized with USB clock
  - Can be tuned in run-time
- Charge Time Measurement Unit (CTMU):
  - Supports mTouch® capacitive touch sensing
  - Provides high-resolution time measurement (1 ns)

Advanced Analog Features

- ADC Module:
  - 10-bit 1 Msps rate with one Sample and Hold (S&H)
  - Up to 48 analog inputs
  - Can operate during Sleep mode
- Flexible and independent ADC trigger sources
- On-chip temperature measurement capability
- Comparators:
  - Three dual-input Comparator modules
  - Programmable reference with 32 voltage points

Timers/Output Compare/Input Capture

- Five General Purpose Timers:
  - Five 16-bit and up to two 32-bit Timers/Counters
- Five Output Compare (OC) modules
- Five Input Capture (IC) modules
- Peripheral Pin Select (PPS) to allow function remap
- Real-Time Clock and Calendar (RTCC) module

Communication Interfaces

- USB 2.0-compliant Full-speed OTG controller
- Up to five UART modules (12.5 Mbps):
  - LIN 2.1 protocols and IrDA® support
- Four 4-wire SPI modules (25 Mbps)
- Two I^2C modules (up to 1 Mbaud) with SMBus support
- PPS to allow function remap
- Parallel Master Port (PMP) with dual read/write buffers
- Controller Area Network (CAN) 2.0B Compliant with DeviceNet™ addressing support

Direct Memory Access (DMA)

- Four channels of hardware DMA with automatic data size detection
- 32-bit Programmable Cyclic Redundancy Check (CRC)
- Two additional channels dedicated to USB
- Two additional channels dedicated to CAN

Input/Output

- 10 mA or 15 mA source/sink for standard V_{OH}/V_{OL} and up to 22 mA for non-standard V_{OH1}
- 5V-tolerant pins
- Selectable open drain, pull-ups, and pull-downs
- External interrupts on all I/O pins

Class B Support

- Class B Safety Library, IEC 60730

Debugger Development Support

- In-circuit and in-application programming
- 4-wire MIPS® Enhanced JTAG interface
- Unlimited program and six complex data breakpoints
- IEEE 1149.2-compatible (JTAG) boundary scan

Packages

Type	QFN	TQFP			TFBGA
Pin Count	64	64	100	100	100
I/O Pins (up to)	53	53	85	85	85
Contact/Lead Pitch	0.50 mm	0.50 mm	0.40 mm	0.50 mm	0.65 mm
Dimensions	9x9x0.9 mm	10x10x1 mm	12x12x1 mm	14x14x1 mm	7x7x1.2 mm

© 2014-2019 Microchip Technology Inc.

TABLE 1: PIC32MX1XX/2XX/5XX 64/100-PIN CONTROLLER FAMILY FEATURES

Device	Pins	Packages(4)	Program Memory (KB)(1)	Data Memory (KB)	Remappable Peripherals					10-bit 1 Msps ADC (Channels)	Analog Comparators	USB On-The-Go (OTG)	CAN	CTMU	I^2C	PMP	RTCC	DMA Channels (Programmable/Dedicated)	I/O Pins	JTAG
					Remappable Pins	Timers/Capture/Compare(2)	UART	SPI/I^2S	External Interrupts(3)											
PIC32MX120F064H	64	QFN, TQFP	64+3	8	37	5/5/5	4	3	5	28	3	N	0	Y	2	Y	Y	4/0	53	Y
PIC32MX130F128H	64	QFN, TQFP	128+3	16	37	5/5/5	4	3	5	28	3	N	0	Y	2	Y	Y	4/0	53	Y
PIC32MX130F128L	100	TQFP	128+3	16	54	5/5/5	5	4	5	48	3	N	0	Y	2	Y	Y	4/0	85	Y
PIC32MX230F128H	64	QFN, TQFP	128+3	16	37	5/5/5	4	3	5	28	3	Y	0	Y	2	Y	Y	4/2	49	Y
PIC32MX230F128L	100	TQFP	128+3	16	54	5/5/5	5	4	5	48	3	Y	0	Y	2	Y	Y	4/2	81	Y
PIC32MX530F128H	64	QFN, TQFP	128+3	16	37	5/5/5	4	3	5	28	3	Y	1	Y	2	Y	Y	4/4	49	Y
PIC32MX530F128L	100	TQFP	128+3	16	54	5/5/5	5	4	5	48	3	Y	1	Y	2	Y	Y	4/4	81	Y
PIC32MX150F256H	64	QFN, TQFP	256+3	32	37	5/5/5	4	3	5	28	3	N	0	Y	2	Y	Y	4/0	53	Y
PIC32MX150F256L	100	TQFP	256+3	32	54	5/5/5	5	4	5	48	3	N	0	Y	2	Y	Y	4/0	85	Y
PIC32MX250F256H	64	QFN, TQFP	256+3	32	37	5/5/5	4	3	5	28	3	Y	0	Y	2	Y	Y	4/2	49	Y
PIC32MX250F256L	100	TQFP	256+3	32	54	5/5/5	5	4	5	48	3	Y	0	Y	2	Y	Y	4/2	81	Y
PIC32MX550F256H	64	QFN, TQFP	256+3	32	37	5/5/5	4	3	5	28	3	Y	1	Y	2	Y	Y	4/4	49	Y
PIC32MX550F256L	100	TQFP	256+3	32	54	5/5/5	5	4	5	48	3	Y	1	Y	2	Y	Y	4/4	81	Y
PIC32MX170F512H	64	QFN, TQFP	512+3	64	37	5/5/5	4	3	5	28	3	N	0	Y	2	Y	Y	4/0	53	Y
PIC32MX170F512L	100	TQFP TFBGA	512+3	64	54	5/5/5	5	4	5	48	3	N	0	Y	2	Y	Y	4/0	85	Y
PIC32MX270F512H	64	QFN, TQFP	512+3	64	37	5/5/5	4	3	5	28	3	Y	0	Y	2	Y	Y	4/2	49	Y
PIC32MX270F512L	100	TQFP TFBGA	512+3	64	54	5/5/5	5	4	5	48	3	Y	0	Y	2	Y	Y	4/2	81	Y
PIC32MX570F512H	64	QFN, TQFP	512+3	64	37	5/5/5	4	3	5	28	3	Y	1	Y	2	Y	Y	4/4	49	Y
PIC32MX570F512L	100	TQFP TFBGA	512+3	64	54	5/5/5	5	4	5	48	3	Y	1	Y	2	Y	Y	4/4	81	Y

Note 1: All devices feature 3 KB of Boot Flash memory.
2: Four out of five timers are remappable.
3: Four out of five external interrupts are remappable.
4: Please contact your local Microchip Sales Office for information regarding the availability of devices in the 100-pin TFBGA package.

© 2014-2019 Microchip Technology Inc.

Device Pin Tables

TABLE 2: PIN NAMES FOR 64-PIN GENERAL PURPOSE DEVICES

64-PIN QFN(4) AND TQFP (TOP VIEW)

PIC32MX120F064H
PIC32MX130F128H
PIC32MX150F256H
PIC32MX170F512H

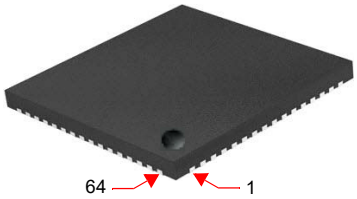

QFN(4)

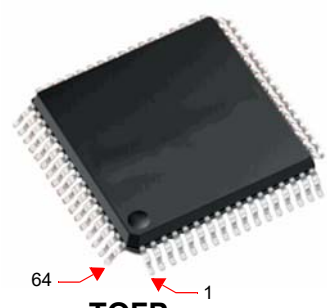

TQFP

Pin #	Full Pin Name	Pin #	Full Pin Name
1	AN22/RPE5/PMD5/RE5	33	RPF3/RF3
2	AN23/PMD6/RE6	34	RPF2/RF2
3	AN27/PMD7/RE7	35	RPF6/SCK1/INT0/RF6
4	AN16/C1IND/RPG6/SCK2/PMA5/RG6	36	SDA1/RG3
5	AN17/C1INC/RPG7/PMA4/RG7	37	SCL1/RG2
6	AN18/C2IND/RPG8/PMA3/RG8	38	VDD
7	$\overline{\text{MCLR}}$	39	OSC1/CLKI/RC12
8	AN19/C2INC/RPG9/PMA2/RG9	40	OSC2/CLKO/RC15
9	VSS	41	VSS
10	VDD	42	RPD8/RTCC/RD8
11	AN5/C1INA/RPB5/RB5	43	RPD9/RD9
12	AN4/C1INB/RB4	44	RPD10/PMA15/RD10
13	PGED3/AN3/C2INA/RPB3/RB3	45	RPD11/PMA14/RD11
14	PGEC3/AN2/CTCMP/C2INB/RPB2/CTED13/RB2	46	RPD0/RD0
15	PGEC1/VREF-/AN1/RPB1/CTED12/RB1	47	SOSCI/RPC13/RC13
16	PGED1/VREF+/AN0/RPB0/PMA6/RB0	48	SOSCO/RPC14/T1CK/RC14
17	PGEC2/AN6/RPB6/RB6	49	AN24/RPD1/RD1
18	PGED2/AN7/RPB7/CTED3/RB7	50	AN25/RPD2/RD2
19	AVDD	51	AN26/C3IND/RPD3/RD3
20	AVSS	52	RPD4/PMWR/RD4
21	AN8/RPB8/CTED10/RB8	53	RPD5/PMRD/RD5
22	AN9/RPB9/CTED4/PMA7/RB9	54	C3INC/RD6
23	TMS/CVREFOUT/AN10/RPB10/CTED11/PMA13/RB10	55	C3INB/RD7
24	TDO/AN11/PMA12/RB11	56	VCAP
25	VSS	57	VDD
26	VDD	58	C3INA/RPF0/RF0
27	TCK/AN12/PMA11/RB12	59	RPF1/RF1
28	TDI/AN13/PMA10/RB13	60	PMD0/RE0
29	AN14/RPB14/SCK3/CTED5/PMA1/RB14	61	PMD1/RE1
30	AN15/RPB15/OCFB/CTED6/PMA0/RB15	62	AN20/PMD2/RE2
31	RPF4/SDA2/PMA9/RF4	63	RPE3/CTPLS/PMD3/RE3
32	RPF5/SCL2/PMA8/RF5	64	AN21/PMD4/RE4

Note 1: The RPn pins can be used by remappable peripherals. See Table 1 for the available peripherals and **Section 11.3 "Peripheral Pin Select"** for restrictions.
2: Every I/O port pin (RBx-RGx) can be used as a change notification pin (CNBx-CNGx). See **Section 11.0 "I/O Ports"** for more information.
3: Shaded pins are 5V tolerant.
4: The metal plane at the bottom of the device is not connected to any pins and is recommended to be connected to VSS externally.

TABLE 3: PIN NAMES FOR 64-PIN USB DEVICES

64-PIN QFN(4) AND TQFP (TOP VIEW)

PIC32MX230F128H
PIC32MX530F128H
PIC32MX250F256H
PIC32MX550F256H
PIC32MX270F512H
PIC32MX570F512H

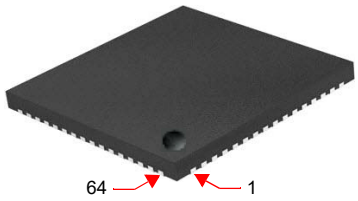

QFN(4)

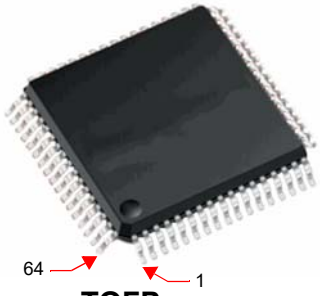

TQFP

Pin #	Full Pin Name	Pin #	Full Pin Name
1	AN22/RPE5/PMD5/RE5	33	USBID/RPF3/RF3
2	AN23/PMD6/RE6	34	VBUS
3	AN27/PMD7/RE7	35	VUSB3V3
4	AN16/C1IND/RPG6/SCK2/PMA5/RG6	36	D-
5	AN17/C1INC/RPG7/PMA4/RG7	37	D+
6	AN18/C2IND/RPG8/PMA3/RG8	38	VDD
7	$\overline{\text{MCLR}}$	39	OSC1/CLKI/RC12
8	AN19/C2INC/RPG9/PMA2/RG9	40	OSC2/CLKO/RC15
9	VSS	41	VSS
10	VDD	42	RPD8/RTCC/RD8
11	AN5/C1INA/RPB5/VBUSON/RB5	43	RPD9/SDA1/RD9
12	AN4/C1INB/RB4	44	RPD10/SCL1/PMA15/RD10
13	PGED3/AN3/C2INA/RPB3/RB3	45	RPD11/PMA14/RD11
14	PGEC3/AN2/CTCMP/C2INB/RPB2/CTED13/RB2	46	RPD0/INT0/RD0
15	PGEC1/VREF-/AN1/RPB1/CTED12/RB1	47	SOSCI/RPC13/RC13
16	PGED1/VREF+/AN0/RPB0/PMA6/RB0	48	SOSCO/RPC14/T1CK/RC14
17	PGEC2/AN6/RPB6/RB6	49	AN24/RPD1/RD1
18	PGED2/AN7/RPB7/CTED3/RB7	50	AN25/RPD2/SCK1/RD2
19	AVDD	51	AN26/C3IND/RPD3/RD3
20	AVSS	52	RPD4/PMWR/RD4
21	AN8/RPB8/CTED10/RB8	53	RPD5/PMRD/RD5
22	AN9/RPB9/CTED4/PMA7/RB9	54	C3INC/RD6
23	TMS/CVREFOUT/AN10/RPB10/CTED11/PMA13/RB10	55	C3INB/RD7
24	TDO/AN11/PMA12/RB11	56	VCAP
25	VSS	57	VDD
26	VDD	58	C3INA/RPF0/RF0
27	TCK/AN12/PMA11/RB12	59	RPF1/RF1
28	TDI/AN13/PMA10/RB13	60	PMD0/RE0
29	AN14/RPB14/SCK3/CTED5/PMA1/RB14	61	PMD1/RE1
30	AN15/RPB15/OCFB/CTED6/PMA0/RB15	62	AN20/PMD2/RE2
31	RPF4/SDA2/PMA9/RF4	63	RPE3/CTPLS/PMD3/RE3
32	RPF5/SCL2/PMA8/RF5	64	AN21/PMD4/RE4

Note 1: The RPn pins can be used by remappable peripherals. See Table 1 for the available peripherals and **Section 11.3 "Peripheral Pin Select"** for restrictions.
2: Every I/O port pin (RBx-RGx) can be used as a change notification pin (CNBx-CNGx). See **Section 11.0 "I/O Ports"** for more information.
3: Shaded pins are 5V tolerant.
4: The metal plane at the bottom of the QFN device is not connected to any pins and is recommended to be connected to VSS externally.

© 2014-2019 Microchip Technology Inc.

TABLE 4: PIN NAMES FOR 100-PIN GENERAL PURPOSE DEVICES

100-PIN TQFP (TOP VIEW)

PIC32MX130F128L
PIC32MX150F256L
PIC32MX170F512L

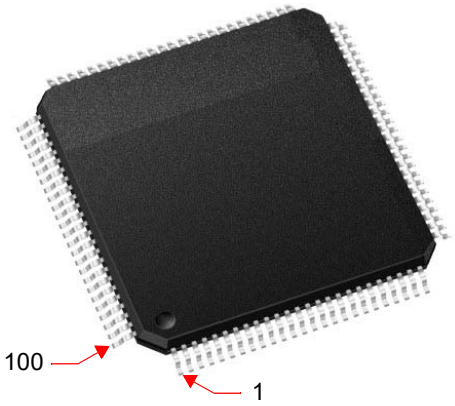

Pin #	Full Pin Name	Pin #	Full Pin Name
1	AN28/RG15	36	VSS
2	VDD	37	VDD
3	AN22/RPE5/PMD5/RE5	38	TCK/CTED2/RA1
4	AN23/PMD6/RE6	39	AN34/RPF13/SCK3/RF13
5	AN27/PMD7/RE7	40	AN35/RPF12/RF12
6	AN29/RPC1/RC1	41	AN12/PMA11/RB12
7	AN30/RPC2/RC2	42	AN13/PMA10/RB13
8	AN31/RPC3/RC3	43	AN14/RPB14/CTED5/PMA1/RB14
9	RPC4/CTED7/RC4	44	AN15/RPB15/OCFB/CTED6/PMA0/RB15
10	AN16/C1IND/RPG6/SCK2/PMA5/RG6	45	VSS
11	AN17/C1INC/RPG7/PMA4/RG7	46	VDD
12	AN18/C2IND/RPG8/PMA3/RG8	47	AN36/RPD14/RD14
13	$\overline{\text{MCLR}}$	48	AN37/RPD15/SCK4/RD15
14	AN19/C2INC/RPG9/PMA2/RG9	49	RPF4/PMA9/RF4
15	VSS	50	RPF5/PMA8/RF5
16	VDD	51	RPF3/RF3
17	TMS/CTED1/RA0	52	AN38/RPF2/RF2
18	AN32/RPE8/RE8	53	AN39/RPF8/RF8
19	AN33/RPE9/RE9	54	RPF7/RF7
20	AN5/C1INA/RPB5/RB5	55	RPF6/SCK1/INT0/RF6
21	AN4/C1INB/RB4	56	SDA1/RG3
22	PGED3/AN3/C2INA/RPB3/RB3	57	SCL1/RG2
23	PGEC3/AN2/CTCMP/C2INB/RPB2/CTED13/RB2	58	SCL2/RA2
24	PGEC1/AN1/RPB1/CTED12/RB1	59	SDA2/RA3
25	PGED1/AN0/RPB0/RB0	60	TDI/CTED9/RA4
26	PGEC2/AN6/RPB6/RB6	61	TDO/RA5
27	PGED2/AN7/RPB7/CTED3/RB7	62	VDD
28	VREF-/PMA7/RA9	63	OSC1/CLKI/RC12
29	VREF+/PMA6/RA10	64	OSC2/CLKO/RC15
30	AVDD	65	VSS
31	AVSS	66	RPA14/RA14
32	AN8/RPB8/CTED10/RB8	67	RPA15/RA15
33	AN9/RPB9/CTED4/RB9	68	RPD8/RTCC/RD8
34	CVREFOUT/AN10/RPB10/CTED11/PMA13/RB10	69	RPD9/RD9
35	AN11/PMA12/RB11	70	RPD10/PMA15/RD10

Note 1: The RPn pins can be used by remappable peripherals. See Table 1 for the available peripherals and **Section 11.3 "Peripheral Pin Select"** for restrictions.

2: Every I/O port pin (RAx-RGx) can be used as a change notification pin (CNAx-CNGx). See **Section 11.0 "I/O Ports"** for more information.

3: Shaded pins are 5V tolerant.

TABLE 4: PIN NAMES FOR 100-PIN GENERAL PURPOSE DEVICES (CONTINUED)

100-PIN TQFP (TOP VIEW)

PIC32MX130F128L
PIC32MX150F256L
PIC32MX170F512L

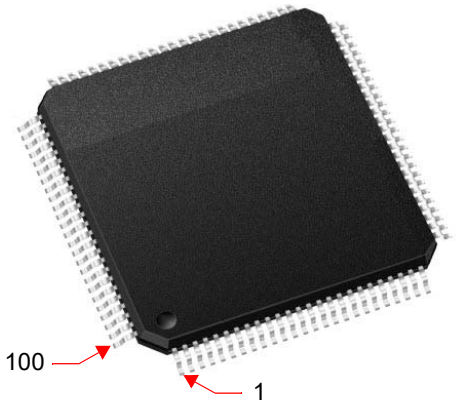

Pin #	Full Pin Name	Pin #	Full Pin Name
71	RPD11/PMA14/RD11	86	VDD
72	RPD0/RD0	87	AN44/C3INA/RPF0/PMD11/RF0
73	SOSCI/RPC13/RC13	88	AN45/RPF1/PMD10/RF1
74	SOSCO/RPC14/T1CK/RC14	89	RPG1/PMD9/RG1
75	VSS	90	RPG0/PMD8/RG0
76	AN24/RPD1/RD1	91	RA6
77	AN25/RPD2/RD2	92	CTED8/RA7
78	AN26/C3IND/RPD3/RD3	93	AN46/PMD0/RE0
79	AN40/RPD12/PMD12/RD12	94	AN47/PMD1/RE1
80	AN41/PMD13/RD13	95	RG14
81	RPD4/PMWR/RD4	96	RG12
82	RPD5/PMRD/RD5	97	RG13
83	AN42/C3INC/PMD14/RD6	98	AN20/PMD2/RE2
84	AN43/C3INB/PMD15/RD7	99	RPE3/CTPLS/PMD3/RE3
85	VCAP	100	AN21/PMD4/RE4

Note 1: The RPn pins can be used by remappable peripherals. See Table 1 for the available peripherals and **Section 11.3 "Peripheral Pin Select"** for restrictions.

2: Every I/O port pin (RAx-RGx) can be used as a change notification pin (CNAx-CNGx). See **Section 11.0 "I/O Ports"** for more information.

3: Shaded pins are 5V tolerant.

© 2014-2019 Microchip Technology Inc.

TABLE 5: PIN NAMES FOR TFBGA 100-PIN GENERAL PURPOSE DEVICES

100-PIN TFBGA (BOTTOM VIEW)

PIC32MX170F512L(4)

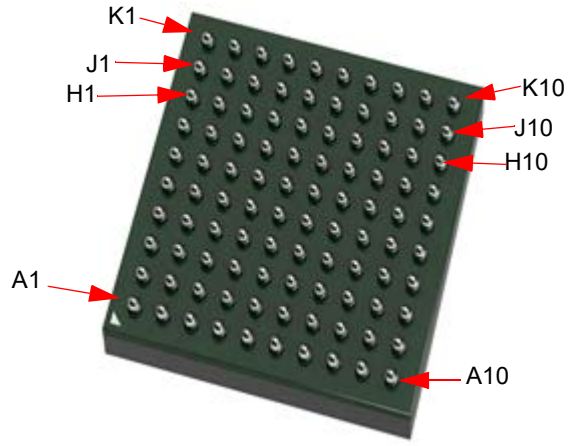

Pin #	Full Pin Name	Pin #	Full Pin Name
A1	SOSCO/RPC14/T1CK/RC14	D4	RPD4/PMWR/RD4
A2	RPD0/RD0	D5	TDO/RA5
A3	RPD9/RD9	D6	TDI/CTED9/RA4
A4	RPD8/RTCC/RD8	D7	VSS
A5	VDD	D8	AN14/RPB14/CTED5/PMA1/RB14
A6	SCL1/RG2	D9	AN13/PMA10/RB13
A7	SDA1/RG3	D10	AN12/PMA11/RB12
A8	RPF7/RF7	E1	VCAP
A9	RPF3/RF3	E2	AN43/C3INB/PMD15/RD7
A10	RPF5/PMA8/RF5	E3	AN42/C3INC/PMD14/RD6
B1	AN24/RPD1/RD1	E4	RPD5/PMRD/RD5
B2	SOSCI/RPC13/RC13	E5	VSS
B3	RPD10/PMA15/RD10	E6	VSS
B4	RPA15/RA15	E7	TCK/CTED2/RA1
B5	OSC1/CLKI/RC12	E8	AN34/RPF13/SCK3/RF13
B6	SCL2/RA2	E9	AN35/RPF12/RF12
B7	RPF6/SCK1/INT0/RF6	E10	VDD
B8	AN38/RPF2/RF2	F1	VDD
B9	AN37/RPD15/SCK4/RD15	F2	AN44/C3INA/RPF0/PMD11/RF0
B10	RPF4/PMA9/RF4	F3	AN45/RPF1/PMD10/RF1
C1	AN26/C3IND/RPD3/RD3	F4	RPG1/PMD9/RG1
C2	AN25/RPD2/RD2	F5	AN16/C1IND/RPG6/SCK2/PMA5/RG6
C3	RPD11/PMA14/RD11	F6	AN17/C1INC/RPG7/PMA4/RG7
C4	RPA14/RA14	F7	VSS
C5	OSC2/CLKO/RC15	F8	AN11/PMA12/RB11
C6	SDA2/RA3	F9	CVREFOUT/AN10/RPB10/CTED11/PMA13/RB10
C7	AN39/RPF8/RF8	F10	AN9/RPB9/CTED4/RB9
C8	AN36/RPD14/RD14	G1	AN46/PMD0/RE0
C9	AN15/RPB15/OCFB/CTED6/PMA0/RB15	G2	CTED8/RA7
C10	VDD	G3	RA6
D1	AN40/RPD12/PMD12/RD12	G4	RPG0/PMD8/RG0

Note 1: The RPn pins can be used by remappable peripherals. See Table 1 for the available peripherals and **Section 11.3 "Peripheral Pin Select"** for restrictions.

2: Every I/O port pin (RAx-RGx) can be used as a change notification pin (CNAx-CNGx). See **Section 11.0 "I/O Ports"** for more information.

3: Shaded pins are 5V tolerant.

4: Please contact your local Microchip Sales Office for information regarding the availability of devices in the 100-pin TFBGA package.

TABLE 5: PIN NAMES FOR TFBGA 100-PIN GENERAL PURPOSE DEVICES (CONTINUED)

100-PIN TFBGA (BOTTOM VIEW)

PIC32MX170F512L(4)

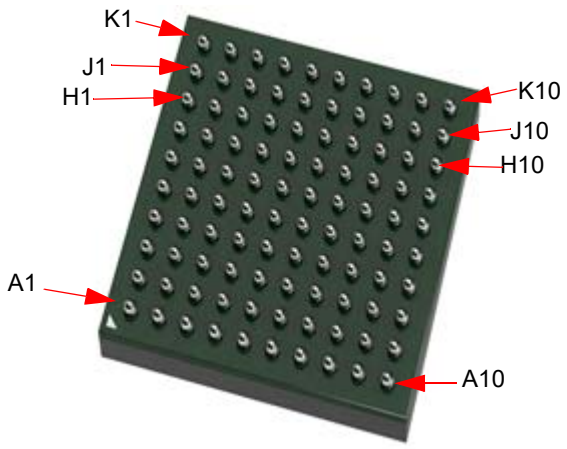

Pin #	Full Pin Name		Pin #	Full Pin Name
D2	AN41/PMD13/RD13		G5	RPC4/CTED7/RC4
D3	VSS		G6	AN18/C2IND/RPG8/PMA3/RG8
G7	AVSS		J4	AN23/PMD6/RE6
G8	VREF+/PMA6/RA10		J5	AN30/RPC2/RC2
G9	AN8/RPB8/CTED10/RB8		J6	AN19/C2INC/RPG9/PMA2/RG9
G10	AVDD		J7	AN32/RPE8/RE8
H1	AN47/PMD1/RE1		J8	AN4/C1INB/RB4
H2	RG14		J9	PGEC1/AN1/RPB1/CTED12/RB1
H3	RG12		J10	PGEC2/AN6/RPB6/RB6
H4	AN22/RPE5/PMD5/RE5		K1	AN21/PMD4/RE4
H5	AN31/RPC3/RC3		K2	AN28/RG15
H6	MCLR		K3	VDD
H7	AN33/RPE9/RE9		K4	AN27/PMD7/RE7
H8	AN5/C1INA/RPB5/RB5		K5	AN29/RPC1/RC1
H9	PGED2/AN7/RPB7/CTED3/RB7		K6	TMS/CTED1/RA0
H10	VREF-/PMA7/RA9		K7	VDD
J1	RPE3/CTPLS/PMD3/RE3		K8	PGED3/AN3/C2INA/RPB3/RB3
J2	AN20/PMD2/RE2		K9	PGEC3/AN2/CTCMP/C2INB/RPB2/CTED13/RB2
J3	RG13		K10	PGED1/AN0/RPB0/RB0

Note 1: The RPn pins can be used by remappable peripherals. See Table 1 for the available peripherals and **Section 11.3 "Peripheral Pin Select"** for restrictions.

2: Every I/O port pin (RAx-RGx) can be used as a change notification pin (CNAx-CNGx). See **Section 11.0 "I/O Ports"** for more information.

3: Shaded pins are 5V tolerant.

4: Please contact your local Microchip Sales Office for information regarding the availability of devices in the 100-pin TFBGA package.

© 2014-2019 Microchip Technology Inc.

TABLE 6: PIN NAMES FOR 100-PIN USB DEVICES

100-PIN TQFP (TOP VIEW)

PIC32MX230F128L
PIC32MX530F128L
PIC32MX250F256L
PIC32MX550F256L
PIC32MX270F512L
PIC32MX570F512L

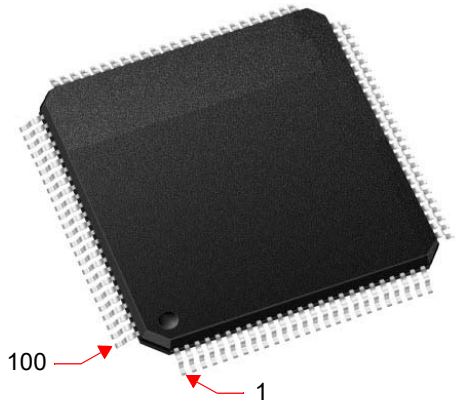

Pin #	Full Pin Name	Pin #	Full Pin Name
1	AN28/RG15	36	VSS
2	VDD	37	VDD
3	AN22/RPE5/PMD5/RE5	38	TCK/CTED2/RA1
4	AN23/PMD6/RE6	39	AN34/RPF13/SCK3/RF13
5	AN27/PMD7/RE7	40	AN35/RPF12/RF12
6	AN29/RPC1/RC1	41	AN12/PMA11/RB12
7	AN30/RPC2/RC2	42	AN13/PMA10/RB13
8	AN31/RPC3/RC3	43	AN14/RPB14/CTED5/PMA1/RB14
9	RPC4/CTED7/RC4	44	AN15/RPB15/OCFB/CTED6/PMA0/RB15
10	AN16/C1IND/RPG6/SCK2/PMA5/RG6	45	VSS
11	AN17/C1INC/RPG7/PMA4/RG7	46	VDD
12	AN18/C2IND/RPG8/PMA3/RG8	47	AN36/RPD14/RD14
13	$\overline{\text{MCLR}}$	48	AN37/RPD15/SCK4/RD15
14	AN19/C2INC/RPG9/PMA2/RG9	49	RPF4/PMA9/RF4
15	VSS	50	RPF5/PMA8/RF5
16	VDD	51	USBID/RPF3/RF3
17	TMS/CTED1/RA0	52	AN38/RPF2/RF2
18	AN32/RPE8/RE8	53	AN39/RPF8/RF8
19	AN33/RPE9/RE9	54	VBUS
20	AN5/C1INA/RPB5/VBUSON/RB5	55	VUSB3V3
21	AN4/C1INB/RB4	56	D-
22	PGED3/AN3/C2INA/RPB3/RB3	57	D+
23	PGEC3/AN2/CTCMP/C2INB/RPB2/CTED13/RB2	58	SCL2/RA2
24	PGEC1/AN1/RPB1/CTED12/RB1	59	SDA2/RA3
25	PGED1/AN0/RPB0/RB0	60	TDI/CTED9/RA4
26	PGEC2/AN6/RPB6/RB6	61	TDO/RA5
27	PGED2/AN7/RPB7/CTED3/RB7	62	VDD
28	VREF-/PMA7/RA9	63	OSC1/CLKI/RC12
29	VREF+/PMA6/RA10	64	OSC2/CLKO/RC15
30	AVDD	65	VSS
31	AVSS	66	RPA14/SCL1/RA14
32	AN8/RPB8/CTED10/RB8	67	RPA15/SDA1/RA15
33	AN9/RPB9/CTED4/RB9	68	RPD8/RTCC/RD8
34	CVREFOUT/AN10/RPB10/CTED11/PMA13/RB10	69	RPD9/RD9
35	AN11/PMA12/RB11	70	RPD10/SCK1/PMA15/RD10

Note 1: The RPn pins can be used by remappable peripherals. See Table 1 for the available peripherals and **Section 11.3 "Peripheral Pin Select"** for restrictions.

2: Every I/O port pin (RAx-RGx) can be used as a change notification pin (CNAx-CNGx). See **Section 11.0 "I/O Ports"** for more information.

3: Shaded pins are 5V tolerant.

TABLE 6: PIN NAMES FOR 100-PIN USB DEVICES (CONTINUED)

100-PIN TQFP (TOP VIEW)

PIC32MX230F128L
PIC32MX530F128L
PIC32MX250F256L
PIC32MX550F256L
PIC32MX270F512L
PIC32MX570F512L

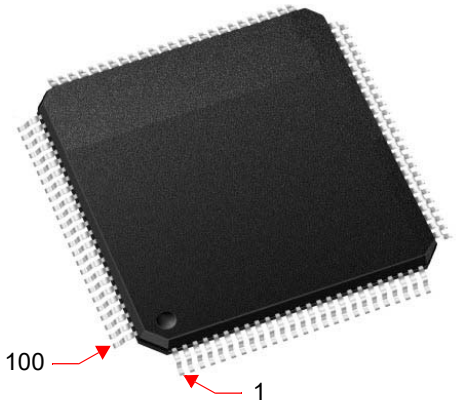

Pin #	Full Pin Name	Pin #	Full Pin Name
71	RPD11/PMA14/RD11	86	VDD
72	RPD0/INT0/RD0	87	AN44/C3INA/RPF0/PMD11/RF0
73	SOSCI/RPC13/RC13	88	AN45/RPF1/PMD10/RF1
74	SOSCO/RPC14/T1CK/RC14	89	RPG1/PMD9/RG1
75	VSS	90	RPG0/PMD8/RG0
76	AN24/RPD1/RD1	91	RA6
77	AN25/RPD2/RD2	92	CTED8/RA7
78	AN26/C3IND/RPD3/RD3	93	AN46/PMD0/RE0
79	AN40/RPD12/PMD12/RD12	94	AN47/PMD1/RE1
80	AN41/PMD13/RD13	95	RG14
81	RPD4/PMWR/RD4	96	RG12
82	RPD5/PMRD/RD5	97	RG13
83	AN42/C3INC/PMD14/RD6	98	AN20/PMD2/RE2
84	AN43/C3INB/PMD15/RD7	99	RPE3/CTPLS/PMD3/RE3
85	VCAP	100	AN21/PMD4/RE4

Note 1: The RPn pins can be used by remappable peripherals. See Table 1 for the available peripherals and **Section 11.3 "Peripheral Pin Select"** for restrictions.

2: Every I/O port pin (RAx-RGx) can be used as a change notification pin (CNAx-CNGx). See **Section 11.0 "I/O Ports"** for more information.

3: Shaded pins are 5V tolerant.

© 2014-2019 Microchip Technology Inc.

TABLE 7: PIN NAMES FOR TFBGA 100-PIN USB DEVICES

100-PIN TFBGA (BOTTOM VIEW)

PIC32MX270F512L(4)
PIC32MX570F512L

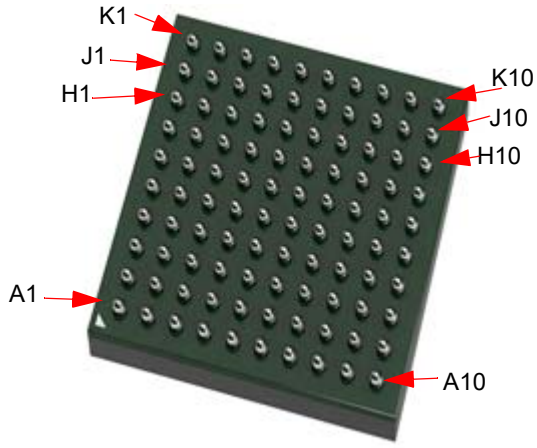

Pin #	Full Pin Name	Pin #	Full Pin Name
A1	SOSCO/RPC14/T1CK/RC14	D4	RPD4/PMWR/RD4
A2	RPD0/INT0/RD0	D5	TDO/RA5
A3	RPD9/RD9	D6	TDI/CTED9/RA4
A4	RPD8/RTCC/RD8	D7	VSS
A5	VDD	D8	AN14/RPB14/CTED5/PMA1/RB14
A6	D+	D9	AN13/PMA10/RB13
A7	D-	D10	AN12/PMA11/RB12
A8	VBUS	E1	VCAP
A9	USBID/RPF3/RF3	E2	AN43/C3INB/PMD15/RD7
A10	RPF5/PMA8/RF5	E3	AN42/C3INC/PMD14/RD6
B1	AN24/RPD1/RD1	E4	RPD5/PMRD/RD5
B2	SOSCI/RPC13/RC13	E5	VSS
B3	RPD10/SCK1/PMA15/RD10	E6	VSS
B4	RPA15/SDA1/RA15	E7	TCK/CTED2/RA1
B5	OSC1/CLKI/RC12	E8	AN34/RPF13/SCK3/RF13
B6	SCL2/RA2	E9	AN35/RPF12/RF12
B7	VUSB3V3	E10	VDD
B8	AN38/RPF2/RF2	F1	VDD
B9	AN37/RPD15/SCK4/RD15	F2	AN44/C3INA/RPF0/PMD11/RF0
B10	RPF4/PMA9/RF4	F3	AN45/RPF1/PMD10/RF1
C1	AN26/C3IND/RPD3/RD3	F4	RPG1/PMD9/RG1
C2	AN25/RPD2/RD2	F5	AN16/C1IND/RPG6/SCK2/PMA5/RG6
C3	RPD11/PMA14/RD11	F6	AN17/C1INC/RPG7/PMA4/RG7
C4	RPA14/SCL1/RA14	F7	VSS
C5	OSC2/CLKO/RC15	F8	AN11/PMA12/RB11
C6	SDA2/RA3	F9	CVREFOUT/AN10/RPB10/CTED11/PMA13/RB10
C7	AN39/RPF8/RF8	F10	AN9/RPB9/CTED4/RB9
C8	AN36/RPD14/RD14	G1	AN46/PMD0/RE0
C9	AN15/RPB15/OCFB/CTED6/PMA0/RB15	G2	CTED8/RA7
C10	VDD	G3	RA6
D1	AN40/RPD12/PMD12/RD12	G4	RPG0/PMD8/RG0

Note 1: The RPn pins can be used by remappable peripherals. See Table 1 for the available peripherals and **Section 11.3 "Peripheral Pin Select"** for restrictions.

2: Every I/O port pin (RAx-RGx) can be used as a change notification pin (CNAx-CNGx). See **Section 11.0 "I/O Ports"** for more information.

3: Shaded pins are 5V tolerant.

4: Please contact your local Microchip Sales Office for information regarding the availability of devices in the 100-pin TFBGA package.

TABLE 7: PIN NAMES FOR TFBGA 100-PIN USB DEVICES (CONTINUED)

100-PIN TFBGA (BOTTOM VIEW)

PIC32MX270F512L(4)
PIC32MX570F512L

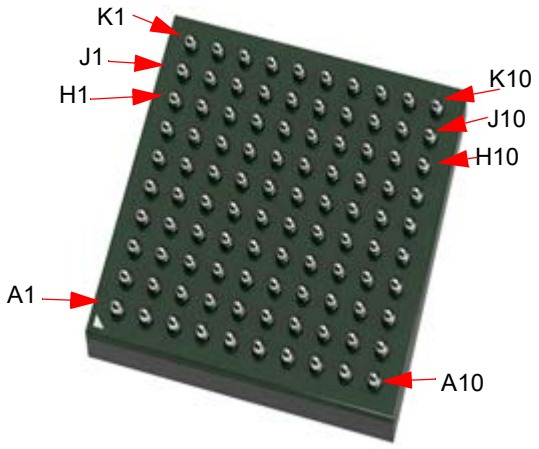

Pin #	Full Pin Name		Pin #	Full Pin Name
D2	AN41/PMD13/RD13		G5	RPC4/CTED7/RC4
D3	VSS		G6	AN18/C2IND/RPG8/PMA3/RG8
G7	AVSS		J4	AN23/PMD6/RE6
G8	VREF+/PMA6/RA10		J5	AN30/RPC2/RC2
G9	AN8/RPB8/CTED10/RB8		J6	AN19/C2INC/RPG9/PMA2/RG9
G10	AVDD		J7	AN32/RPE8/RE8
H1	AN47/PMD1/RE1		J8	AN4/C1INB/RB4
H2	RG14		J9	PGEC1/AN1/RPB1/CTED12/RB1
H3	RG12		J10	PGEC2/AN6/RPB6/RB6
H4	AN22/RPE5/PMD5/RE5		K1	AN21/PMD4/RE4
H5	AN31/RPC3/RC3		K2	AN28/RG15
H6	MCLR		K3	VDD
H7	AN33/RPE9/RE9		K4	AN27/PMD7/RE7
H8	AN5/C1INA/RPB5/VBUSON/RB5		K5	AN29/RPC1/RC1
H9	PGED2/AN7/RPB7/CTED3/RB7		K6	TMS/CTED1/RA0
H10	VREF-/PMA7/RA9		K7	VDD
J1	RPE3/CTPLS/PMD3/RE3		K8	PGED3/AN3/C2INA/RPB3/RB3
J2	AN20/PMD2/RE2		K9	PGEC3/AN2/CTCMP/C2INB/RPB2/CTED13/RB2
J3	RG13		K10	PGED1/AN0/RPB0/RB0

Note 1: The RPn pins can be used by remappable peripherals. See Table 1 for the available peripherals and **Section 11.3 "Peripheral Pin Select"** for restrictions.

2: Every I/O port pin (RAx-RGx) can be used as a change notification pin (CNAx-CNGx). See **Section 11.0 "I/O Ports"** for more information.

3: Shaded pins are 5V tolerant.

4: Please contact your local Microchip Sales Office for information regarding the availability of devices in the 100-pin TFBGA package.

© 2014-2019 Microchip Technology Inc.

Table of Contents

1.0 Device Overview 17
2.0 Guidelines for Getting Started with 32-bit MCUs 29
3.0 CPU 39
4.0 Memory Organization 43
5.0 Interrupt Controller 57
6.0 Flash Program Memory 67
7.0 Resets 73
8.0 Oscillator Configuration 77
9.0 Direct Memory Access (DMA) Controller 89
10.0 USB On-The-Go (OTG) 109
11.0 I/O Ports 133
12.0 Timer1 163
13.0 Timer2/3, Timer4/5 167
14.0 Watchdog Timer (WDT) 173
15.0 Input Capture 177
16.0 Output Compare 181
17.0 Serial Peripheral Interface (SPI) 185
18.0 Inter-Integrated Circuit (I^2C) 195
19.0 Universal Asynchronous Receiver Transmitter (UART) 203
20.0 Parallel Master Port (PMP) 211
21.0 Real-Time Clock and Calendar (RTCC) 225
22.0 10-bit Analog-to-Digital Converter (ADC) 235
23.0 Controller Area Network (CAN) 247
24.0 Comparator 275
25.0 Comparator Voltage Reference (CVREF) 279
26.0 Charge Time Measurement Unit (CTMU) 283
27.0 Power-Saving Features 289
28.0 Special Features 295
29.0 Instruction Set 307
30.0 Development Support 309
31.0 40 MHz Electrical Characteristics 313
32.0 50 MHz Electrical Characteristics 357
33.0 DC and AC Device Characteristics Graphs 363
34.0 Packaging Information 365
The Microchip Web Site 387
Customer Change Notification Service 387
Customer Support 387
Product Identification System 388

TO OUR VALUED CUSTOMERS

It is our intention to provide our valued customers with the best documentation possible to ensure successful use of your Microchip products. To this end, we will continue to improve our publications to better suit your needs. Our publications will be refined and enhanced as new volumes and updates are introduced.

If you have any questions or comments regarding this publication, please contact the Marketing Communications Department via E-mail at **docerrors@microchip.com**. We welcome your feedback.

Most Current Data Sheet

To obtain the most up-to-date version of this data sheet, please register at our Worldwide Web site at:

http://www.microchip.com

You can determine the version of a data sheet by examining its literature number found on the bottom outside corner of any page. The last character of the literature number is the version number, (e.g., DS30000000A is version A of document DS30000000).

Errata

An errata sheet, describing minor operational differences from the data sheet and recommended workarounds, may exist for current devices. As device/documentation issues become known to us, we will publish an errata sheet. The errata will specify the revision of silicon and revision of document to which it applies.

To determine if an errata sheet exists for a particular device, please check with one of the following:

- Microchip's Worldwide Web site; **http://www.microchip.com**
- Your local Microchip sales office (see last page)

When contacting a sales office, please specify which device, revision of silicon and data sheet (include literature number) you are using.

Customer Notification System

Register on our web site at **www.microchip.com** to receive the most current information on all of our products.

© 2014-2019 Microchip Technology Inc.

Referenced Sources

This device data sheet is based on the following individual sections of the *"PIC32 Family Reference Manual"*. These documents should be considered as the general reference for the operation of a particular module or device feature.

Note: To access the documents listed below, browse to the documentation section of the Microchip web site (www.microchip.com).

- **Section 1. "Introduction"** (DS60001127)
- **Section 2. "CPU"** (DS60001113)
- **Section 3. "Memory Organization"** (DS60001115)
- **Section 5. "Flash Program Memory"** (DS60001121)
- **Section 6. "Oscillator Configuration"** (DS60001112)
- **Section 7. "Resets"** (DS60001118)
- **Section 8. "Interrupt Controller"** (DS60001108)
- **Section 9. "Watchdog Timer and Power-up Timer"** (DS60001114)
- **Section 10. "Power-Saving Features"** (DS60001130)
- **Section 12. "I/O Ports"** (DS60001120)
- **Section 13. "Parallel Master Port (PMP)"** (DS60001128)
- **Section 14. "Timers"** (DS60001105)
- **Section 15. "Input Capture"** (DS60001122)
- **Section 16. "Output Compare"** (DS60001111)
- **Section 17. "10-bit Analog-to-Digital Converter (ADC)"** (DS60001104)
- **Section 19. "Comparator"** (DS60001110)
- **Section 20. "Comparator Voltage Reference (CVREF)"** (DS60001109)
- **Section 21. "Universal Asynchronous Receiver Transmitter (UART)"** (DS60001107)
- **Section 23. "Serial Peripheral Interface (SPI)"** (DS60001106)
- **Section 24. "Inter-Integrated Circuit (I^2C)"** (DS60001116)
- **Section 27. "USB On-The-Go (OTG)"** (DS60001126)
- **Section 29. "Real-Time Clock and Calendar (RTCC)"** (DS60001125)
- **Section 31. "Direct Memory Access (DMA) Controller"** (DS60001117)
- **Section 32. "Configuration"** (DS60001124)
- **Section 33. "Programming and Diagnostics"** (DS60001129)
- **Section 34. "Controller Area Network (CAN)"** (DS60001123)
- **Section 37. "Charge Time Measurement Unit (CTMU)"** (DS60001167)

© 2014-2019 Microchip Technology Inc.

NOTES:

© 2014-2019 Microchip Technology Inc.

1.0 DEVICE OVERVIEW

Note 1: This data sheet summarizes the features of the PIC32MX1XX/2XX/5XX 64/100-pin family of devices. It is not intended to be a comprehensive reference source. To complement the information in this data sheet, refer to the related section of the *"PIC32 Family Reference Manual"*, which is available from the Microchip web site (www.microchip.com/PIC32).

This document contains device-specific information for PIC32MX1XX/2XX/5XX 64/100-pin devices.

Figure 1-1 illustrates a general block diagram of the core and peripheral modules in the PIC32MX1XX/2XX/5XX 64/100-pin family of devices.

Table 1-1 lists the functions of the various pins shown in the pinout diagrams.

FIGURE 1-1: PIC32MX1XX/2XX/5XX 64/100-PIN BLOCK DIAGRAM

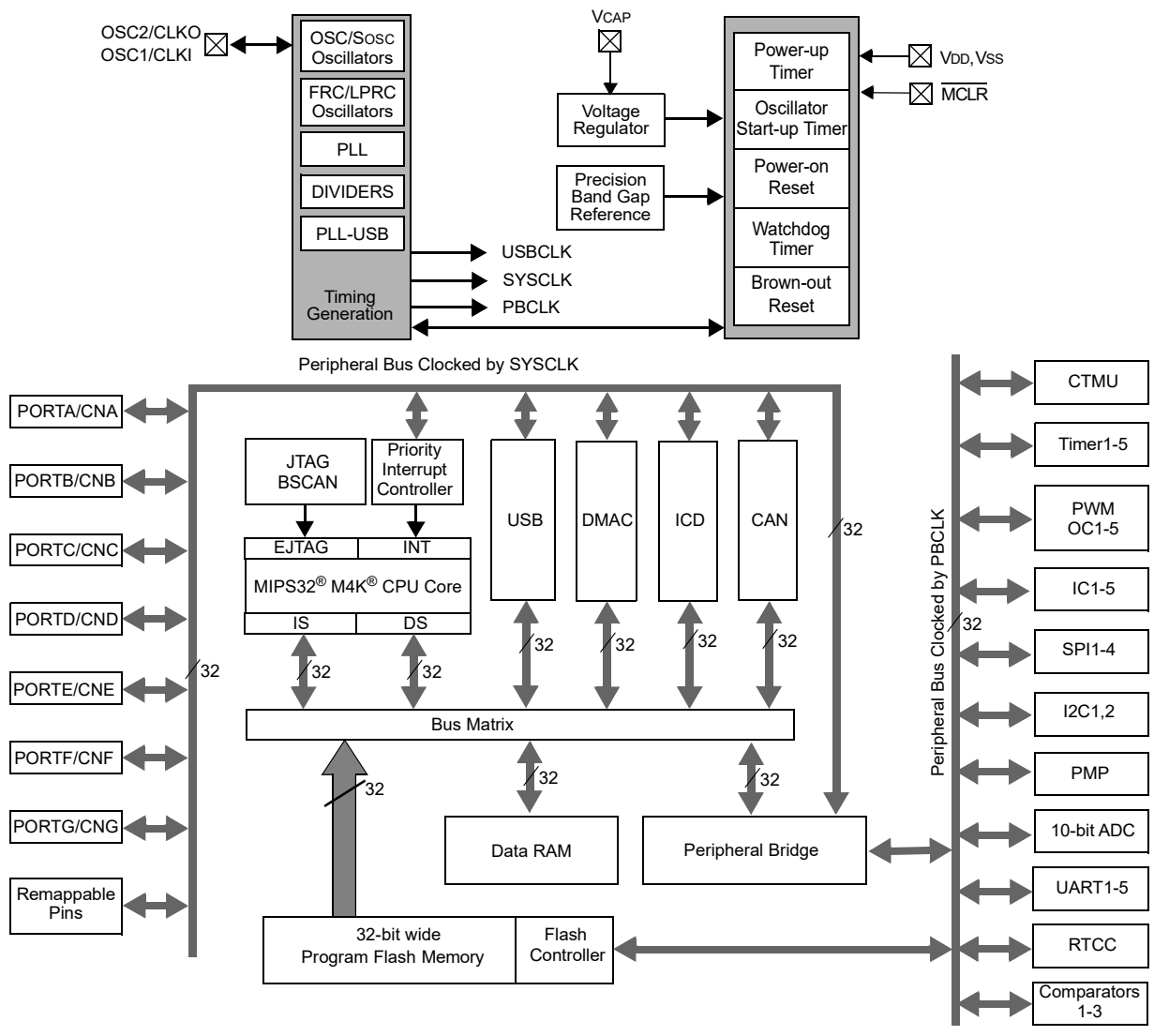

Note: Not all features are available on all devices. Refer to **TABLE 1: "PIC32MX1XX/2XX/5XX 64/100-pin Controller Family Features"** for the list of features by device.

TABLE 1-1: PINOUT I/O DESCRIPTIONS

Pin Name	Pin Number			Pin Type	Buffer Type	Description
	64-pin QFN/ TQFP	100-pin TQFP	100-pin TFBGA			
AN0	16	25	K10	I	Analog	Analog input channels.
AN1	15	24	J9	I	Analog	
AN2	14	23	K9	I	Analog	
AN3	13	22	K8	I	Analog	
AN4	12	21	J8	I	Analog	
AN5	11	20	H8	I	Analog	
AN6	17	26	J10	I	Analog	
AN7	18	27	H9	I	Analog	
AN8	21	32	G9	I	Analog	
AN9	22	33	F10	I	Analog	
AN10	23	34	F9	I	Analog	
AN11	24	35	F8	I	Analog	
AN12	27	41	D10	I	Analog	
AN13	28	42	D9	I	Analog	
AN14	29	43	D8	I	Analog	
AN15	30	44	C9	I	Analog	
AN16	4	10	F5	I	Analog	
AN17	5	11	F6	I	Analog	
AN18	6	12	G6	I	Analog	
AN19	8	14	J6	I	Analog	
AN20	62	98	J2	I	Analog	
AN21	64	100	K1	I	Analog	
AN22	1	3	H4	I	Analog	
AN23	2	4	J4	I	Analog	
AN24	49	76	B1	I	Analog	
AN25	50	77	C2	I	Analog	
AN26	51	78	C1	I	Analog	
AN27	3	5	K4	I	Analog	
AN28	—	1	K2	I	Analog	
AN29	—	6	K5	I	Analog	
AN30	—	7	J5	I	Analog	
AN31	—	8	H5	I	Analog	
AN32	—	18	J7	I	Analog	
AN33	—	19	H7	I	Analog	
AN34	—	39	E8	I	Analog	
AN35	—	40	E9	I	Analog	

Legend: CMOS = CMOS compatible input or output; Analog = Analog input; I = Input; O = Output; ST = Schmitt Trigger input with CMOS levels; TTL = TTL input buffer; P = Power

Note 1: This pin is only available on devices without a USB module.

2: This pin is only available on devices with a USB module.

3: This pin is not available on 64-pin devices with a USB module.

4: This pin is only available on 100-pin devices without a USB module.

TABLE 1-1: PINOUT I/O DESCRIPTIONS (CONTINUED)

Pin Name	Pin Number			Pin Type	Buffer Type	Description
	64-pin QFN/ TQFP	100-pin TQFP	100-pin TFBGA			
AN36	—	47	C8	I	Analog	Analog input channels.
AN37	—	48	B9	I	Analog	
AN38	—	52	B8	I	Analog	
AN39	—	53	C7	I	Analog	
AN40	—	79	D1	I	Analog	
AN41	—	80	D2	I	Analog	
AN42	—	83	E3	I	Analog	
AN43	—	84	E2	I	Analog	
AN44	—	87	F2	I	Analog	
AN45	—	88	F3	I	Analog	
AN46	—	93	G1	I	Analog	
AN47	—	94	H1	I	Analog	
CLKI	39	63	B5	I	ST/CMOS	External clock source input. Always associated with OSC1 pin function.
CLKO	40	64	C5	O	—	Oscillator crystal output. Connects to crystal or resonator in Crystal Oscillator mode. Optionally functions as CLKO in RC and EC modes. Always associated with the OSC2 pin function.
OSC1	39	63	B5	I	ST/CMOS	Oscillator crystal input. ST buffer when configured in RC mode; CMOS otherwise.
OSC2	40	64	C5	O	—	Oscillator crystal output. Connects to crystal or resonator in Crystal Oscillator mode. Optionally functions as CLKO in RC and EC modes.
SOSCI	47	73	B2	I	ST/CMOS	32.768 kHz low-power oscillator crystal input; CMOS otherwise.
SOSCO	48	74	A1	O	—	32.768 kHz low-power oscillator crystal output.
IC1	PPS	PPS	PPS	I	ST	Capture Input 1-5
IC2	PPS	PPS	PPS	I	ST	
IC3	PPS	PPS	PPS	I	ST	
IC4	PPS	PPS	PPS	I	ST	
IC5	PPS	PPS	PPS	I	ST	
OC1	PPS	PPS	PPS	O	ST	Output Compare Output 1
OC2	PPS	PPS	PPS	O	ST	Output Compare Output 2
OC3	PPS	PPS	PPS	O	ST	Output Compare Output 3
OC4	PPS	PPS	PPS	O	ST	Output Compare Output 4
OC5	PPS	PPS	PPS	O	ST	Output Compare Output 5
OCFA	PPS	PPS	PPS	I	ST	Output Compare Fault A Input
OCFB	30	44	C9	I	ST	Output Compare Fault B Input

Legend: CMOS = CMOS compatible input or output; Analog = Analog input; I = Input; O = Output; ST = Schmitt Trigger input with CMOS levels; TTL = TTL input buffer; P = Power

Note 1: This pin is only available on devices without a USB module.

2: This pin is only available on devices with a USB module.

3: This pin is not available on 64-pin devices with a USB module.

4: This pin is only available on 100-pin devices without a USB module.

TABLE 1-1: PINOUT I/O DESCRIPTIONS (CONTINUED)

Pin Name	Pin Number			Pin Type	Buffer Type	Description
	64-pin QFN/ TQFP	100-pin TQFP	100-pin TFBGA			
INT0	35(1), 46(2)	55(1), 72(2)	B7(1),A4(2)	I	ST	External Interrupt 0
INT1	PPS	PPS	PPS	I	ST	External Interrupt 1
INT2	PPS	PPS	PPS	I	ST	External Interrupt 2
INT3	PPS	PPS	PPS	I	ST	External Interrupt 3
INT4	PPS	PPS	PPS	I	ST	External Interrupt 4
RA0	—	17	K6	I/O	ST	PORTA is a bidirectional I/O port
RA1	—	38	E7	I/O	ST	
RA2	—	58	B6	I/O	ST	
RA3	—	59	C6	I/O	ST	
RA4	—	60	D6	I/O	ST	
RA5	—	61	D5	I/O	ST	
RA6	—	91	G3	I/O	ST	
RA7	—	92	G2	I/O	ST	
RA9	—	28	H10	I/O	ST	
RA10	—	29	G8	I/O	ST	
RA14	—	66	C4	I/O	ST	
RA15	—	67	B4	I/O	ST	
RB0	16	25	K10	I/O	ST	PORTB is a bidirectional I/O port
RB1	15	24	J9	I/O	ST	
RB2	14	23	K9	I/O	ST	
RB3	13	22	K8	I/O	ST	
RB4	12	21	J8	I/O	ST	
RB5	11	20	H8	I/O	ST	
RB6	17	26	J10	I/O	ST	
RB7	18	27	H9	I/O	ST	
RB8	21	32	G9	I/O	ST	
RB9	22	33	F10	I/O	ST	
RB10	23	34	F9	I/O	ST	
RB11	24	35	F8	I/O	ST	
RB12	27	41	D10	I/O	ST	
RB13	28	42	D9	I/O	ST	
RB14	29	43	D8	I/O	ST	
RB15	30	44	C9	I/O	ST	

Legend: CMOS = CMOS compatible input or output; Analog = Analog input; I = Input; O = Output; ST = Schmitt Trigger input with CMOS levels; TTL = TTL input buffer; P = Power

Note 1: This pin is only available on devices without a USB module.

2: This pin is only available on devices with a USB module.

3: This pin is not available on 64-pin devices with a USB module.

4: This pin is only available on 100-pin devices without a USB module.

TABLE 1-1: PINOUT I/O DESCRIPTIONS (CONTINUED)

Pin Name	Pin Number			Pin Type	Buffer Type	Description
	64-pin QFN/ TQFP	100-pin TQFP	100-pin TFBGA			
RC1	—	6	K5	I/O	ST	PORTC is a bidirectional I/O port
RC2	—	7	J5	I/O	ST	
RC3	—	8	H5	I/O	ST	
RC4	—	9	G5	I/O	ST	
RC12	39	63	B5	I/O	ST	
RC13	47	73	B2	I/O	ST	
RC14	48	74	A1	I/O	ST	
RC15	40	64	C5	I/O	ST	
RD0	46	72	A2	I/O	ST	PORTD is a bidirectional I/O port
RD1	49	76	B1	I/O	ST	
RD2	50	77	C2	I/O	ST	
RD3	51	78	C1	I/O	ST	
RD4	52	81	D4	I/O	ST	
RD5	53	82	E4	I/O	ST	
RD6	54	83	E3	I/O	ST	
RD7	55	84	E2	I/O	ST	
RD8	42	68	A4	I/O	ST	
RD9	43	69	A3	I/O	ST	
RD10	44	70	B3	I/O	ST	
RD11	45	71	C3	I/O	ST	
RD12	—	79	D1	I/O	ST	
RD13	—	80	D2	I/O	ST	
RD14	—	47	C8	I/O	ST	
RD15	—	48	B9	I/O	ST	
RE0	60	93	G1	I/O	ST	PORTE is a bidirectional I/O port
RE1	61	94	H1	I/O	ST	
RE2	62	98	J2	I/O	ST	
RE3	63	99	J1	I/O	ST	
RE4	64	100	K1	I/O	ST	
RE5	1	3	H4	I/O	ST	
RE6	2	4	J4	I/O	ST	
RE7	3	5	K4	I/O	ST	
RE8	—	18	J7	I/O	ST	
RE9	—	19	H7	I/O	ST	

Legend: CMOS = CMOS compatible input or output; Analog = Analog input; I = Input; O = Output; ST = Schmitt Trigger input with CMOS levels; TTL = TTL input buffer; P = Power

Note 1: This pin is only available on devices without a USB module.

2: This pin is only available on devices with a USB module.

3: This pin is not available on 64-pin devices with a USB module.

4: This pin is only available on 100-pin devices without a USB module.

TABLE 1-1: PINOUT I/O DESCRIPTIONS (CONTINUED)

Pin Name	Pin Number			Pin Type	Buffer Type	Description
	64-pin QFN/ TQFP	100-pin TQFP	100-pin TFBGA			
RF0	58	87	F2	I/O	ST	PORTF is a bidirectional I/O port
RF1	59	88	F3	I/O	ST	
RF2	34(3)	52	B8	I/O	ST	
RF3	33	51	A9	I/O	ST	
RF4	31	49	B10	I/O	ST	
RF5	32	50	A10	I/O	ST	
RF6	35(1)	55(1)	B7 (1)	I/O	ST	
RF7	—	54(4)	A8 (4)	I/O	ST	
RF8	—	53	C7	I/O	ST	
RF12	—	40	E9	I/O	ST	
RF13	—	39	E8	I/O	ST	
RG0	—	90	G4	I/O	ST	PORTG is a bidirectional I/O port
RG1	—	89	F4	I/O	ST	
RG2	37(1)	57(1)	A6(1)	I/O	ST	
RG3	36(1)	56(1)	A7(1)	I/O	ST	
RG6	4	10	F5	I/O	ST	
RG7	5	11	F6	I/O	ST	
RG8	6	12	G6	I/O	ST	
RG9	8	14	J6	I/O	ST	
RG12	—	96	H3	I/O	ST	
RG13	—	97	J3	I/O	ST	
RG14	—	95	H2	I/O	ST	
RG15	—	1	K2	I/O	ST	
T1CK	48	74	A1	I	ST	Timer1 External Clock Input
T2CK	PPS	PPS	PPS	I	ST	Timer2 External Clock Input
T3CK	PPS	PPS	PPS	I	ST	Timer3 External Clock Input
T4CK	PPS	PPS	PPS	I	ST	Timer4 External Clock Input
T5CK	PPS	PPS	PPS	I	ST	Timer5 External Clock Input
$\overline{U1CTS}$	PPS	PPS	PPS	I	ST	UART1 Clear to Send
$\overline{U1RTS}$	PPS	PPS	PPS	O	—	UART1 Ready to Send
U1RX	PPS	PPS	PPS	I	ST	UART1 Receive
U1TX	PPS	PPS	PPS	O	—	UART1 Transmit
$\overline{U2CTS}$	PPS	PPS	PPS	I	ST	UART2 Clear to Send
$\overline{U2RTS}$	PPS	PPS	PPS	O	—	UART2 Ready to Send
U2RX	PPS	PPS	PPS	I	ST	UART2 Receive
U2TX	PPS	PPS	PPS	O	—	UART2 Transmit

Legend: CMOS = CMOS compatible input or output; Analog = Analog input; I = Input; O = Output; ST = Schmitt Trigger input with CMOS levels; TTL = TTL input buffer; P = Power

Note 1: This pin is only available on devices without a USB module.

2: This pin is only available on devices with a USB module.

3: This pin is not available on 64-pin devices with a USB module.

4: This pin is only available on 100-pin devices without a USB module.

TABLE 1-1: PINOUT I/O DESCRIPTIONS (CONTINUED)

Pin Name	Pin Number			Pin Type	Buffer Type	Description
	64-pin QFN/ TQFP	100-pin TQFP	100-pin TFBGA			
$\overline{U3CTS}$	PPS	PPS	PPS	I	ST	UART3 Clear to Send
$\overline{U3RTS}$	PPS	PPS	PPS	O	—	UART3 Ready to Send
U3RX	PPS	PPS	PPS	I	ST	UART3 Receive
U3TX	PPS	PPS	PPS	O	—	UART3 Transmit
$\overline{U4CTS}$	PPS	PPS	PPS	I	ST	UART4 Clear to Send
$\overline{U4RTS}$	PPS	PPS	PPS	O	—	UART4 Ready to Send
U4RX	PPS	PPS	PPS	I	ST	UART4 Receive
U4TX	PPS	PPS	PPS	O	—	UART4 Transmit
$\overline{U5CTS}$	—	PPS	PPS	I	ST	UART5 Clear to Send
$\overline{U5RTS}$	—	PPS	PPS	O	—	UART5 Ready to Send
U5RX	—	PPS	PPS	I	ST	UART5 Receive
U5TX	—	PPS	PPS	O	—	UART5 Transmit
SCK1	35(1), 50(2)	55(1), 70(2)	B7(1),B3(1)	I/O	ST	Synchronous Serial Clock Input/Output for SPI1
SDI1	PPS	PPS	PPS	I	—	SPI1 Data In
SDO1	PPS	PPS	PPS	O	ST	SPI1 Data Out
$\overline{SS1}$	PPS	PPS	PPS	I/O	—	SPI1 Slave Synchronization for Frame Pulse I/O
SCK2	4	10	F5	I/O	ST	Synchronous Serial Clock Input/Output for SPI2
SDI2	PPS	PPS	PPS	I	—	SPI2 Data In
SDO2	PPS	PPS	PPS	O	ST	SPI2 Data Out
$\overline{SS2}$	PPS	PPS	PPS	I/O	—	SPI2 Slave Synchronization for Frame Pulse I/O
SCK3	29	39	E8	I/O	ST	Synchronous Serial Clock Input/Output for SPI3
SDI3	PPS	PPS	PPS	I	—	SPI3 Data In
SDO3	PPS	PPS	PPS	O	ST	SPI3 Data Out
$\overline{SS3}$	PPS	PPS	PPS	I/O	—	SPI3 Slave Synchronization for Frame Pulse I/O
SCK4	—	48	B9	I/O	ST	Synchronous Serial Clock Input/Output for SPI4
SDI4	—	PPS	PPS	I	—	SPI4 Data In
SDO4	—	PPS	PPS	O	ST	SPI4 Data Out
$\overline{SS4}$	—	PPS	PPS	I/O	—	SPI4 Slave Synchronization for Frame Pulse I/O
SCL1	37(1), 44(2)	57(1), 66(2)	A6(1),C4(2)	I/O	ST	Synchronous Serial Clock Input/Output for I2C1
SDA1	36(1), 43(2)	56(1), 67(2)	A7(1),B4(2)	I/O	ST	Synchronous Serial Data Input/Output for I2C1
SCL2	32	58	B6	I/O	ST	Synchronous Serial Clock Input/Output for I2C2
SDA2	31	59	C6	I/O	ST	Synchronous Serial Data Input/Output for I2C2
TMS	23	17	K6	I	ST	JTAG Test Mode Select Pin
TCK	27	38	E7	I	ST	JTAG Test Clock Input Pin
TDI	28	60	D6	I	—	JTAG Test Clock Input Pin
TDO	24	61	D5	O	—	JTAG Test Clock Output Pin

Legend: CMOS = CMOS compatible input or output; Analog = Analog input; I = Input; O = Output; ST = Schmitt Trigger input with CMOS levels; TTL = TTL input buffer; P = Power

Note 1: This pin is only available on devices without a USB module.

2: This pin is only available on devices with a USB module.

3: This pin is not available on 64-pin devices with a USB module.

4: This pin is only available on 100-pin devices without a USB module.

TABLE 1-1: PINOUT I/O DESCRIPTIONS (CONTINUED)

Pin Name	Pin Number			Pin Type	Buffer Type	Description
	64-pin QFN/ TQFP	100-pin TQFP	100-pin TFBGA			
RTCC	42	68	A4	O	—	Real-Time Clock Alarm Output
CVREFOUT	23	34	F9	O	Analog	Comparator Voltage Reference (Output)
C1INA	11	20	H8	I	Analog	Comparator 1 Inputs
C1INB	12	21	J8	I	Analog	
C1INC	5	11	F6	I	Analog	
C1IND	4	10	F5	I	Analog	
C2INA	13	22	K8	I	Analog	Comparator 2 Inputs
C2INB	14	23	K9	I	Analog	
C2INC	8	14	J6	I	Analog	
C2IND	6	12	G6	I	Analog	
C3INA	58	87	F2	I	Analog	Comparator 3 Inputs
C3INB	55	84	E2	I	Analog	
C3INC	54	83	E3	I	Analog	
C3IND	51	78	C1	I	Analog	
C1OUT	PPS	PPS	PPS	O	—	Comparator 1 Output
C2OUT	PPS	PPS	PPS	O	—	Comparator 2 Output
C3OUT	PPS	PPS	PPS	O	—	Comparator 3 Output
PMALL	30	44	C9	O	TTL/ST	Parallel Master Port Address Latch Enable Low Byte
PMALH	29	43	D8	O	TTL/ST	Parallel Master Port Address Latch Enable High Byte
PMA0	30	44	C9	O	TTL/ST	Parallel Master Port Address bit 0 Input (Buffered Slave modes) and Output (Master modes)
PMA1	29	43	D8	O	TTL/ST	Parallel Master Port Address bit 0 Input (Buffered Slave modes) and Output (Master modes)

Legend: CMOS = CMOS compatible input or output; Analog = Analog input; I = Input; O = Output; ST = Schmitt Trigger input with CMOS levels; TTL = TTL input buffer; P = Power

Note 1: This pin is only available on devices without a USB module.

2: This pin is only available on devices with a USB module.

3: This pin is not available on 64-pin devices with a USB module.

4: This pin is only available on 100-pin devices without a USB module.

TABLE 1-1: PINOUT I/O DESCRIPTIONS (CONTINUED)

Pin Name	Pin Number			Pin Type	Buffer Type	Description
	64-pin QFN/ TQFP	100-pin TQFP	100-pin TFBGA			
PMA2	8	14	J6	O	TTL/ST	Parallel Master Port data (Demultiplexed Master mode) or Address/Data (Multiplexed Master modes)
PMA3	6	12	G6	O	TTL/ST	
PMA4	5	11	F6	O	TTL/ST	
PMA5	4	10	F5	O	TTL/ST	
PMA6	16	29	G8	O	TTL/ST	
PMA7	22	28	H10	O	TTL/ST	
PMA8	32	50	A10	O	TTL/ST	
PMA9	31	49	B10	O	TTL/ST	
PMA10	28	42	D9	O	TTL/ST	
PMA11	27	41	D10	O	TTL/ST	
PMA12	24	35	F8	O	TTL/ST	
PMA13	23	34	F9	O	TTL/ST	
PMA14	45	71	C3	O	TTL/ST	
PMA15	44	70	B3	O	TTL/ST	
PMCS1	45	71	C3	O	TTL/ST	Parallel Master Port data (Demultiplexed Master mode) or Address/Data (Multiplexed Master modes)
PMCS2	44	70	B3	O	TTL/ST	
PMD0	60	93	G1	I/O	TTL/ST	
PMD1	61	94	H1	I/O	TTL/ST	
PMD2	62	98	J2	I/O	TTL/ST	
PMD3	63	99	J1	I/O	TTL/ST	
PMD4	64	100	K1	I/O	TTL/ST	
PMD5	1	3	H4	I/O	TTL/ST	
PMD6	2	4	J4	I/O	TTL/ST	
PMD7	3	5	K4	I/O	TTL/ST	
PMD8	—	90	G4	I/O	TTL/ST	
PMD9	—	89	F4	I/O	TTL/ST	
PMD10	—	88	F3	I/O	TTL/ST	
PMD11	—	87	F2	I/O	TTL/ST	
PMD12	—	79	D1	I/O	TTL/ST	
PMD13	—	80	D2	I/O	TTL/ST	
PMD14	—	83	E3	I/O	TTL/ST	
PMD15	—	84	E2	I/O	TTL/ST	
PMRD	53	82	E4	O	—	Parallel Master Port Read Strobe
PMWR	52	81	D4	O	—	Parallel Master Port Write Strobe
V_{BUS}(2)	34	54	A8	I	Analog	USB Bus Power Monitor

Legend: CMOS = CMOS compatible input or output; Analog = Analog input; I = Input; O = Output; ST = Schmitt Trigger input with CMOS levels; TTL = TTL input buffer; P = Power

Note 1: This pin is only available on devices without a USB module.

2: This pin is only available on devices with a USB module.

3: This pin is not available on 64-pin devices with a USB module.

4: This pin is only available on 100-pin devices without a USB module.

TABLE 1-1: PINOUT I/O DESCRIPTIONS (CONTINUED)

Pin Name	Pin Number			Pin Type	Buffer Type	Description
	64-pin QFN/ TQFP	100-pin TQFP	100-pin TFBGA			
V_{USB3V3}(2)	35	55	B7	P	—	USB internal transceiver supply. If the USB module is not used, this pin must be connected to V_{DD}.
V_{BUSON}(2)	11	20	H8	O	—	USB Host and OTG bus power control Output
D+(2)	37	57	A6	I/O	Analog	USB D+
D-(2)	36	56	A7	I/O	Analog	USB D-
USBID(2)	33	51	A9	I	ST	USB OTG ID Detect
PGED1	16	25	K10	I/O	ST	Data I/O pin for Programming/Debugging Communication Channel 1
PGEC1	15	24	J9	I	ST	Clock Input pin for Programming/Debugging Communication Channel 1
PGED2	18	27	H9	I/O	ST	Data I/O Pin for Programming/Debugging Communication Channel 2
PGEC2	17	26	J10	I	ST	Clock Input Pin for Programming/Debugging Communication Channel 2
PGED3	13	22	K8	I/O	ST	Data I/O Pin for Programming/Debugging Communication Channel 3
PGEC3	14	23	K9	I	ST	Clock Input Pin for Programming/Debugging Communication Channel 3
CTED1	—	17	K6	I	ST	CTMU External Edge Input 1
CTED2	—	38	E7	I	ST	CTMU External Edge Input 2
CTED3	18	27	H9	I	ST	CTMU External Edge Input 3
CTED4	22	33	F10	I	ST	CTMU External Edge Input 4
CTED5	29	43	D8	I	ST	CTMU External Edge Input 5
CTED6	30	44	C9	I	ST	CTMU External Edge Input 6
CTED7	—	9	G5	I	ST	CTMU External Edge Input 7
CTED8	—	92	G2	I	ST	CTMU External Edge Input 8
CTED9	—	60	D6	I	ST	CTMU External Edge Input 9
CTED10	21	32	G9	I	ST	CTMU External Edge Input 10
CTED11	23	34	F9	I	ST	CTMU External Edge Input 11
CTED12	15	24	J9	I	ST	CTMU External Edge Input 12
CTED13	14	23	K9	I	ST	CTMU External Edge Input 13
C1RX	PPS	PPS	PPS	I	ST	Enhanced CAN Receive
C1TX	PPS	PPS	PPS	O	ST	Enhanced CAN Transmit

Legend: CMOS = CMOS compatible input or output; Analog = Analog input; I = Input; O = Output; ST = Schmitt Trigger input with CMOS levels; TTL = TTL input buffer; P = Power

Note 1: This pin is only available on devices without a USB module.

2: This pin is only available on devices with a USB module.

3: This pin is not available on 64-pin devices with a USB module.

4: This pin is only available on 100-pin devices without a USB module.

TABLE 1-1: PINOUT I/O DESCRIPTIONS (CONTINUED)

Pin Name	Pin Number			Pin Type	Buffer Type	Description
	64-pin QFN/ TQFP	100-pin TQFP	100-pin TFBGA			
$\overline{MCLR}$	7	13	H6	I	ST	Master Clear (Reset) input. This pin is an active-low Reset to the device.
AVDD	19	30	G10	P	P	Positive supply for analog modules. This pin must be connected at all times.
AVSS	20	31	G7	P	P	Ground reference for analog modules
VDD	10, 26, 38, 57	2, 16, 37, 46, 62, 86	K3,K7,E10 ,C10,A5, F1	P	—	Positive supply for peripheral logic and I/O pins
VCAP	56	85	E1	P	—	Capacitor for Internal Voltage Regulator
VSS	9, 25, 41	15, 36, 45, 65, 75	E6,F7,D7, E5,D3	P	—	Ground reference for logic and I/O pins
VREF+	16	29	G8	P	Analog	Analog Voltage Reference (High) Input
VREF-	15	28	H10	P	Analog	Analog Voltage Reference (Low) Input

Legend: CMOS = CMOS compatible input or output Analog = Analog input I = Input O = Output
ST = Schmitt Trigger input with CMOS levels TTL = TTL input buffer P = Power

Note 1: This pin is only available on devices without a USB module.
2: This pin is only available on devices with a USB module.
3: This pin is not available on 64-pin devices with a USB module.
4: This pin is only available on 100-pin devices without a USB module.

NOTES:

2.0 GUIDELINES FOR GETTING STARTED WITH 32-BIT MCUS

Note: This data sheet summarizes the features of the PIC32MX1XX/2XX/5XX 64/100-pin family of devices. It is not intended to be a comprehensive reference source. To complement the information in this data sheet, refer to the related section of the *"PIC32 Family Reference Manual"*, which is available from the Microchip web site (www.microchip.com/PIC32).

2.1 Basic Connection Requirements

Getting started with the PIC32MX1XX/2XX/5XX 64/100-pin family of 32-bit Microcontrollers (MCUs) requires attention to a minimal set of device pin connections before proceeding with development. The following is a list of pin names, which must always be connected:

- All VDD and VSS pins (see **2.2 "Decoupling Capacitors"**)
- All AVDD and AVSS pins, even if the ADC module is not used (see **2.2 "Decoupling Capacitors"**)
- VCAP pin (see **2.3 "Capacitor on Internal Voltage Regulator (VCAP)"**)
- $\overline{\text{MCLR}}$ pin (see **2.4 "Master Clear (MCLR) Pin"**)
- PGECx/PGEDx pins, used for In-Circuit Serial Programming (ICSP™) and debugging purposes (see **2.5 "ICSP Pins"**)
- OSC1 and OSC2 pins, when external oscillator source is used (see **2.7 "External Oscillator Pins"**)

The following pins may be required:

VREF+/VREF- pins, used when external voltage reference for the ADC module is implemented.

Note: The AVDD and AVSS pins must be connected, regardless of ADC use and the ADC voltage reference source.

2.2 Decoupling Capacitors

The use of decoupling capacitors on power supply pins, such as VDD, VSS, AVDD and AVSS is required. See Figure 2-1.

Consider the following criteria when using decoupling capacitors:

- **Value and type of capacitor:** A value of 0.1 µF (100 nF), 10-20V is recommended. The capacitor should be a low Equivalent Series Resistance (low-ESR) capacitor and have resonance frequency in the range of 20 MHz and higher. It is further recommended that ceramic capacitors be used.
- **Placement on the printed circuit board:** The decoupling capacitors should be placed as close to the pins as possible. It is recommended that the capacitors be placed on the same side of the board as the device. If space is constricted, the capacitor can be placed on another layer on the PCB using a via; however, ensure that the trace length from the pin to the capacitor is within one-quarter inch (6 mm) in length.
- **Handling high frequency noise:** If the board is experiencing high frequency noise, upward of tens of MHz, add a second ceramic-type capacitor in parallel to the above described decoupling capacitor. The value of the second capacitor can be in the range of 0.01 µF to 0.001 µF. Place this second capacitor next to the primary decoupling capacitor. In high-speed circuit designs, consider implementing a decade pair of capacitances as close to the power and ground pins as possible. For example, 0.1 µF in parallel with 0.001 µF.
- **Maximizing performance:** On the board layout from the power supply circuit, run the power and return traces to the decoupling capacitors first, and then to the device pins. This ensures that the decoupling capacitors are first in the power chain. Equally important is to keep the trace length between the capacitor and the power pins to a minimum thereby reducing PCB track inductance.

© 2014-2019 Microchip Technology Inc.

FIGURE 2-1: RECOMMENDED MINIMUM CONNECTION

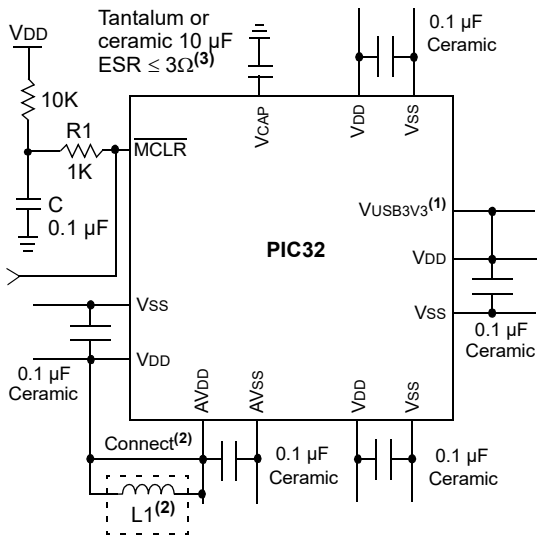

Note 1: If the USB module is not used, this pin must be connected to VDD.

2: As an option, instead of a hard-wired connection, an inductor (L1) can be substituted between VDD and AVDD to improve ADC noise rejection. The inductor impedance should be less than 3Ω and the inductor capacity greater than 10 mA.

Where:

$$f = \frac{F_{CNV}}{2} \quad \text{(i.e., ADC conversion rate/2)}$$

$$f = \frac{1}{(2\pi\sqrt{LC})}$$

$$L = \left(\frac{1}{(2\pi f\sqrt{C})}\right)^2$$

2: Aluminum or electrolytic capacitors should not be used. ESR ≤ 3Ω from -40ºC to 125ºC @ SYSCLK frequency (i.e., MIPS).

2.2.1 BULK CAPACITORS

The use of a bulk capacitor is recommended to improve power supply stability. Typical values range from 4.7 µF to 47 µF. This capacitor should be located as close to the device as possible.

2.3 Capacitor on Internal Voltage Regulator (VCAP)

2.3.1 INTERNAL REGULATOR MODE

A low-ESR (3 ohm) capacitor is required on the VCAP pin, which is used to stabilize the internal voltage regulator output. The VCAP pin must not be connected to VDD, and must have a CEFC capacitor, with at least a 6V rating, connected to ground. The type can be ceramic or tantalum. Refer to **Section 31.0 "40 MHz Electrical Characteristics"** for additional information on CEFC specifications.

2.4 Master Clear ($\overline{\text{MCLR}}$) Pin

The $\overline{\text{MCLR}}$ pin provides two specific device functions:

- Device Reset
- Device programming and debugging

Pulling The $\overline{\text{MCLR}}$ pin low generates a device Reset. Figure 2-2 illustrates a typical $\overline{\text{MCLR}}$ circuit. During device programming and debugging, the resistance and capacitance that can be added to the pin must be considered. Device programmers and debuggers drive the $\overline{\text{MCLR}}$ pin. Consequently, specific voltage levels (VIH and VIL) and fast signal transitions must not be adversely affected. Therefore, specific values of R and C will need to be adjusted based on the application and PCB requirements.

For example, as illustrated in Figure 2-2, it is recommended that the capacitor C, be isolated from the $\overline{\text{MCLR}}$ pin during programming and debugging operations.

Place the components illustrated in Figure 2-2 within one-quarter inch (6 mm) from the $\overline{\text{MCLR}}$ pin.

FIGURE 2-2: EXAMPLE OF $\overline{\text{MCLR}}$ PIN CONNECTIONS

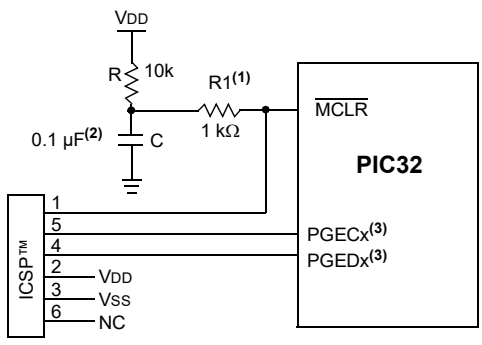

Note 1: 470Ω ≤ R1 ≤ 1Ω will limit any current flowing into $\overline{\text{MCLR}}$ from the external capacitor C, in the event of $\overline{\text{MCLR}}$ pin breakdown, due to Electrostatic Discharge (ESD) or Electrical Overstress (EOS). Ensure that the $\overline{\text{MCLR}}$ pin VIH and VIL specifications are met without interfering with the Debug/Programmer tools.

2: The capacitor can be sized to prevent unintentional Resets from brief glitches or to extend the device Reset period during POR.

3: No pull-ups or bypass capacitors are allowed on active debug/program PGECx/PGEDx pins.

© 2014-2019 Microchip Technology Inc.

2.5 ICSP Pins

The PGECx and PGEDx pins are used for In-Circuit Serial Programming™ (ICSP™) and debugging purposes. It is recommended to keep the trace length between the ICSP connector and the ICSP pins on the device as short as possible. If the ICSP connector is expected to experience an ESD event, a series resistor is recommended, with the value in the range of a few tens of Ohms, not to exceed 100 Ohms.

Pull-up resistors, series diodes and capacitors on the PGECx and PGEDx pins are not recommended as they will interfere with the programmer/debugger communications to the device. If such discrete components are an application requirement, they should be removed from the circuit during programming and debugging. Alternatively, refer to the AC/DC characteristics and timing requirements information in the respective device Flash programming specification for information on capacitive loading limits and pin input voltage high (V_{IH}) and input voltage low (V_{IL}) requirements.

Ensure that the "Communication Channel Select" (i.e., PGECx/PGEDx pins) programmed into the device matches the physical connections for the ICSP to MPLAB® ICD 3 or MPLAB REAL ICE™.

For more information on MPLAB ICD 3 and MPLAB REAL ICE connection requirements, refer to the following documents that are available on the Microchip web site.

- *"Using MPLAB® ICD 3"* (poster) DS50001765
- *"MPLAB® ICD 3 Design Advisory"* DS50001764
- *"MPLAB® REAL ICE™ In-Circuit Debugger User's Guide"* DS50001616
- *"Using MPLAB® REAL ICE™ Emulator"* (poster) DS50001749

2.6 JTAG

The TMS, TDO, TDI and TCK pins are used for testing and debugging according to the Joint Test Action Group (JTAG) standard. It is recommended to keep the trace length between the JTAG connector and the JTAG pins on the device as short as possible. If the JTAG connector is expected to experience an ESD event, a series resistor is recommended, with the value in the range of a few tens of Ohms, not to exceed 100 Ohms.

Pull-up resistors, series diodes and capacitors on the TMS, TDO, TDI and TCK pins are not recommended as they will interfere with the programmer or debugger communications to the device. If such discrete components are an application requirement, they should be removed from the circuit during programming and debugging. Alternatively, refer to the AC/DC characteristics and timing requirements information in the respective device Flash programming specification for information on capacitive loading limits and pin input voltage high (V_{IH}) and input voltage low (V_{IL}) requirements

2.7 External Oscillator Pins

Many MCUs have options for at least two oscillators: a high-frequency primary oscillator and a low-frequency secondary oscillator (refer to **Section 8.0 "Oscillator Configuration"** for details).

The oscillator circuit should be placed on the same side of the board as the device. Also, place the oscillator circuit close to the respective oscillator pins, not exceeding one-half inch (12 mm) distance between them. The load capacitors should be placed next to the oscillator, on the same side of the board. Use a grounded copper pour around the oscillator circuit to isolate them from surrounding circuits. The grounded copper pour should be routed directly to the MCU ground. Do not run any signal traces or power traces inside the ground pour. Also, if using a two-sided board, avoid any traces on the other side of the board where the crystal is placed. A suggested layout is illustrated in Figure 2-3.

FIGURE 2-3: SUGGESTED OSCILLATOR CIRCUIT PLACEMENT

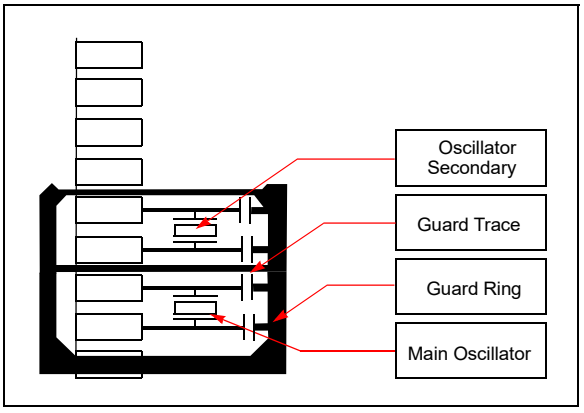

2.7.1 CRYSTAL OSCILLATOR DESIGN CONSIDERATION

The following examples are used to calculate the Primary Oscillator loading capacitor values:

- CIN = PIC32_OSC2_Pin Capacitance = ~4-5 pF
- COUT = PIC32_OSC1_Pin Capacitance = ~4-5 pF
- C1 and C2 = XTAL manufacturing recommended loading capacitance
- Estimated PCB stray capacitance, (i.e.,12 mm length) = 2.5 pF

EXAMPLE 2-1: CRYSTAL LOAD CAPACITOR CALCULATION

Crystal manufacturer recommended: $C1 = C2 = 15\ pF$

Therefore:

$$C_{LOAD} = \{([C_{IN} + C1] * [C_{OUT} + C2]) / [C_{IN} + C1 + C2 + C_{OUT}]\} + \text{estimated oscillator PCB stray capacitance}$$

$$= \{([5 + 15][5 + 15]) / [5 + 15 + 15 + 5]\} + 2.5\ pF$$

$$= \{([20][20]) / [40]\} + 2.5$$

$$= 10 + 2.5 = 12.5\ pF$$

Rounded to the nearest standard value or 13 pF in this example for Primary Oscillator crystals “C1” and “C2”.

The following tips are used to increase oscillator gain, (i.e., to increase peak-to-peak oscillator signal):

- Select a crystal with a lower “minimum” power drive rating
- Select an crystal oscillator with a lower XTAL manufacturing “ESR” rating.
- Add a parallel resistor across the crystal. The smaller the resistor value the greater the gain. It is recommended to stay in the range of 600k to 1M
- C1 and C2 values also affect the gain of the oscillator. The lower the values, the higher the gain.
- C2/C1 ratio also affects gain. To increase the gain, make C1 slightly smaller than C2, which will also help start-up performance.

Note: Do not add excessive gain such that the oscillator signal is clipped, flat on top of the sine wave. If so, you need to reduce the gain or add a series resistor, RS, as shown in circuit “C” in Figure 2-4. Failure to do so will stress and age the crystal, which can result in an early failure. Adjust the gain to trim the max peak-to-peak to ~VDD-0.6V. When measuring the oscillator signal you must use a FET scope probe or a probe with ≤ 1.5 pF or the scope probe itself will unduly change the gain and peak-to-peak levels.

2.7.1.1 Additional Microchip References

- AN588 *“PICmicro® Microcontroller Oscillator Design Guide”*
- AN826 *“Crystal Oscillator Basics and Crystal Selection for rfPIC™ and PICmicro® Devices”*
- AN849 *“Basic PICmicro® Oscillator Design”*

FIGURE 2-4: PRIMARY CRYSTAL OSCILLATOR CIRCUIT RECOMMENDATIONS

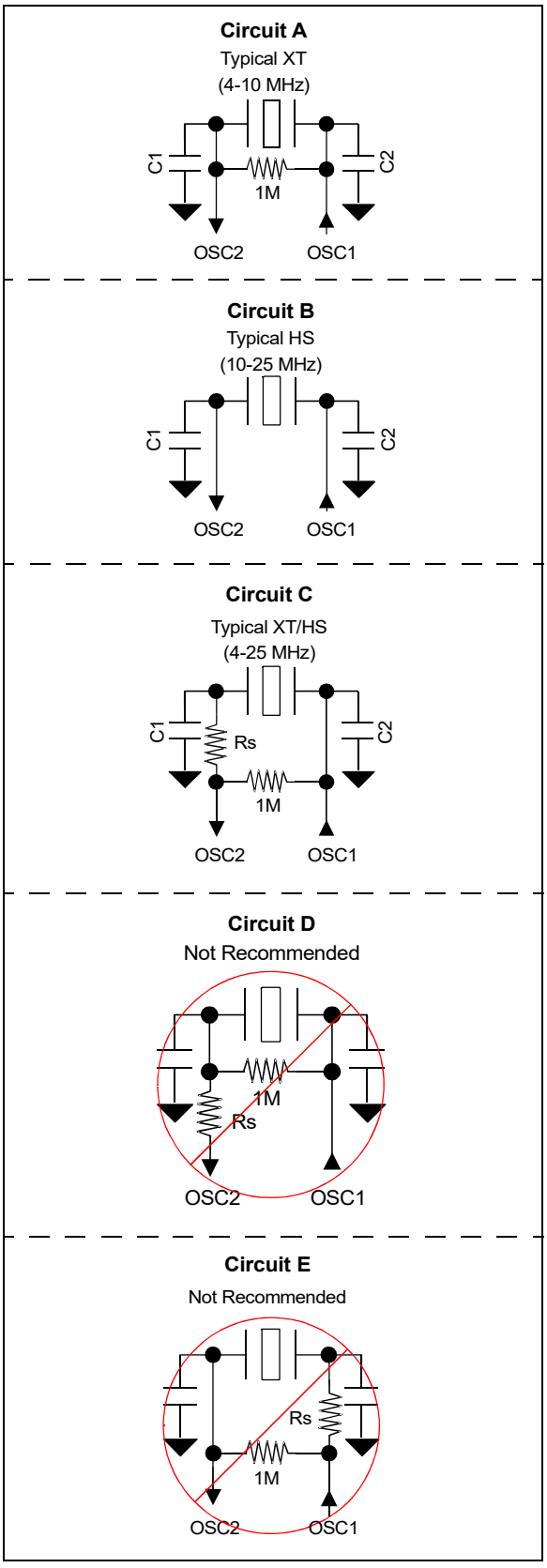

© 2014-2019 Microchip Technology Inc.

2.8 Unused I/Os

Unused I/O pins should not be allowed to float as inputs. They can be configured as outputs and driven to a logic-low state.

Alternatively, inputs can be reserved by connecting the pin to VSS through a 1k to 10k resistor and configuring the pin as an input.

2.9 Considerations When Interfacing to Remotely Powered Circuits

2.9.1 NON-5V TOLERANT INPUT PINS

A quick review of the absolute maximum rating section in **31.0 "40 MHz Electrical Characteristics"** will indicate that the voltage on any non-5v tolerant pin may not exceed AVDD/VDD + 0.3V. Figure 2-5 shows an example of a remote circuit using an independent power source, which is powered while connected to a PIC32 non-5V tolerant circuit that is not powered.

FIGURE 2-5: PIC32 NON-5V TOLERANT CIRCUIT EXAMPLE

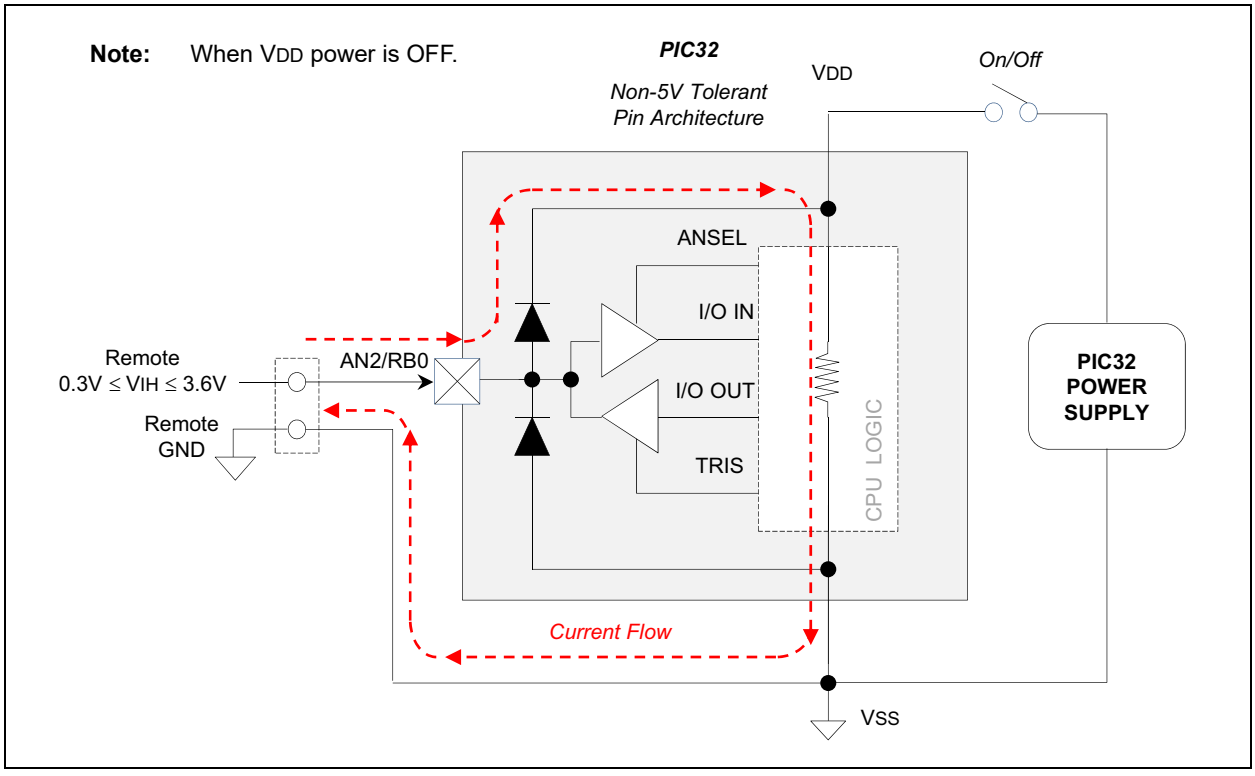

© 2014-2019 Microchip Technology Inc.

Without proper signal isolation, on non-5V tolerant pins, the remote signal can power the PIC32 device through the high side ESD protection diodes. Besides violating the absolute maximum rating specification when VDD of the PIC32 device is restored and ramping up or ramping down, it can also negatively affect the internal Power-on Reset (POR) and Brown-out Reset (BOR) circuits, which can lead to improper initialization of internal PIC32 logic circuits. In these cases, it is recommended to implement digital or analog signal isolation as depicted in Figure 2-6, as appropriate. This is indicative of all industry microcontrollers and not just Microchip products.

TABLE 2-1: EXAMPLES OF DIGITAL/ ANALOG ISOLATORS WITH OPTIONAL LEVEL TRANSLATION

Example Digital/Analog Signal Isolation Circuits	Inductive Coupling	Capacitive Coupling	Opto Coupling	Analog/Digital Switch
ADuM7241 / 40 ARZ (1 Mbps)	X	—	—	—
ADuM7241 / 40 CRZ (25 Mbps)	X	—	—	—
ISO721	—	X	—	—
LTV-829S (2 Channel)	—	—	X	—
LTV-849S (4 Channel)	—	—	X	—
FSA266 / NC7WB66	—	—	—	X

FIGURE 2-6: DIGITAL/ANALOG SIGNAL ISOLATION CIRCUITS

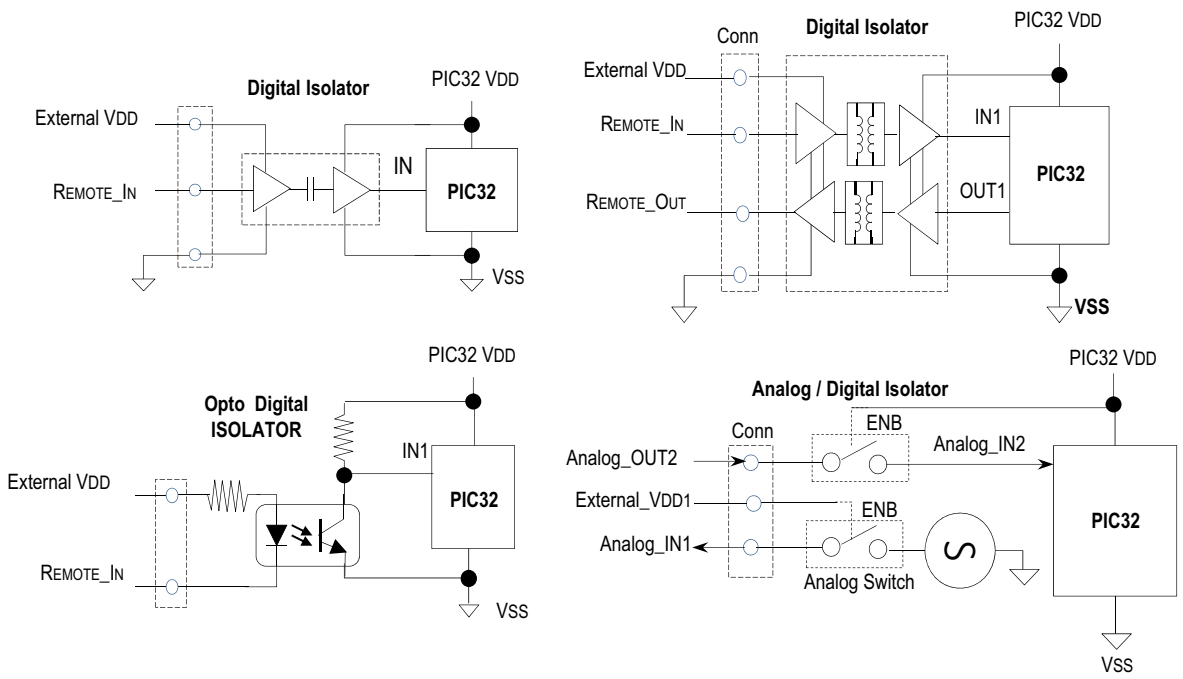

2.9.2 5V TOLERANT INPUT PINS

The internal high side diode on 5V tolerant pins are bussed to an internal floating node, rather than being connected to VDD, as shown in Figure 2-7. Voltages on these pins, if VDD < 2.3V, should not exceed roughly 3.2V relative to VSS of the PIC32 device. Voltage of 3.6V or higher will violate the absolute maximum specification, and will stress the oxide layer separating the high side floating node, which impacts device reliability. If a remotely powered “digital-only” signal can be guaranteed to always be ≤ 3.2V relative to Vss on the PIC32 device side, a 5V tolerant pin could be used without the need for a digital isolator. This is assuming there is not a ground loop issue, logic ground of the two circuits not at the same absolute level, and a remote logic low input is not less than VSS - 0.3V.

FIGURE 2-7: PIC32 5V TOLERANT PIN ARCHITECTURE EXAMPLE

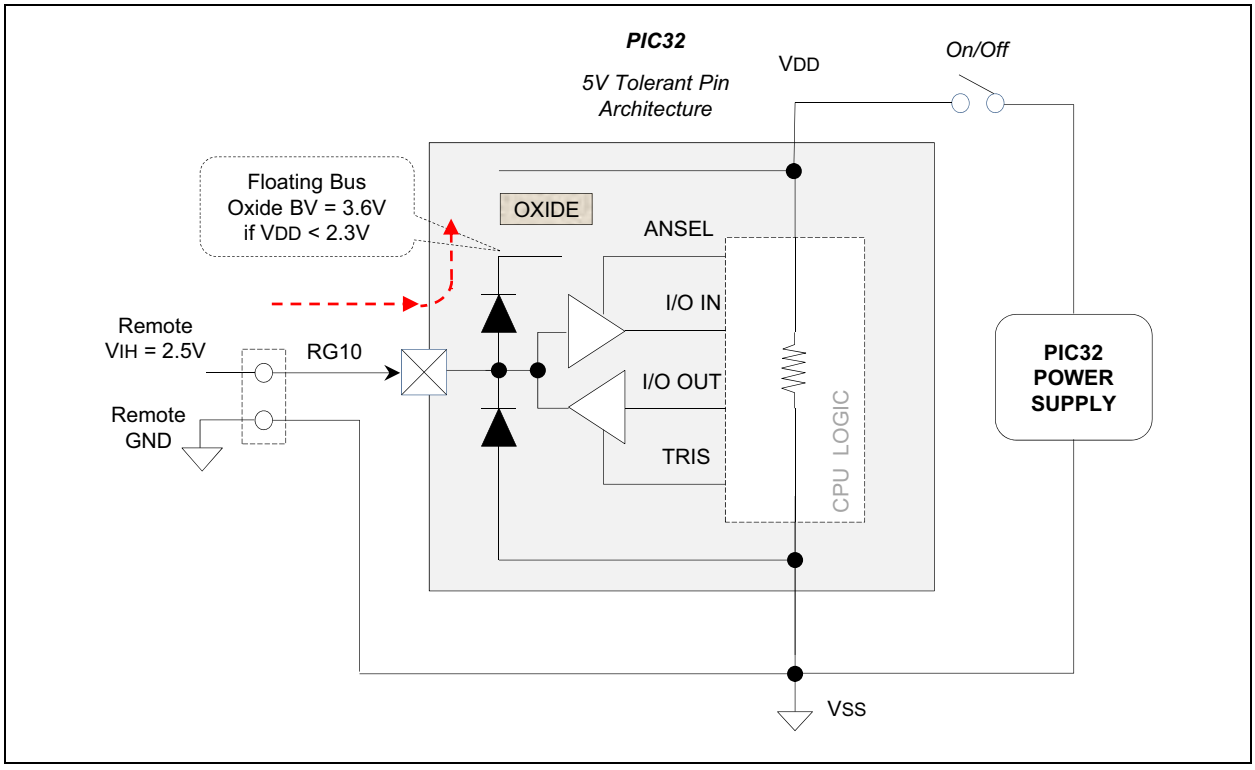

© 2014-2019 Microchip Technology Inc.

2.10 Typical Application Connection Examples

Examples of typical application connections are shown in Figure 2-8, Figure 2-9, and Figure 2-10.

FIGURE 2-8: CAPACITIVE TOUCH SENSING WITH GRAPHICS APPLICATION

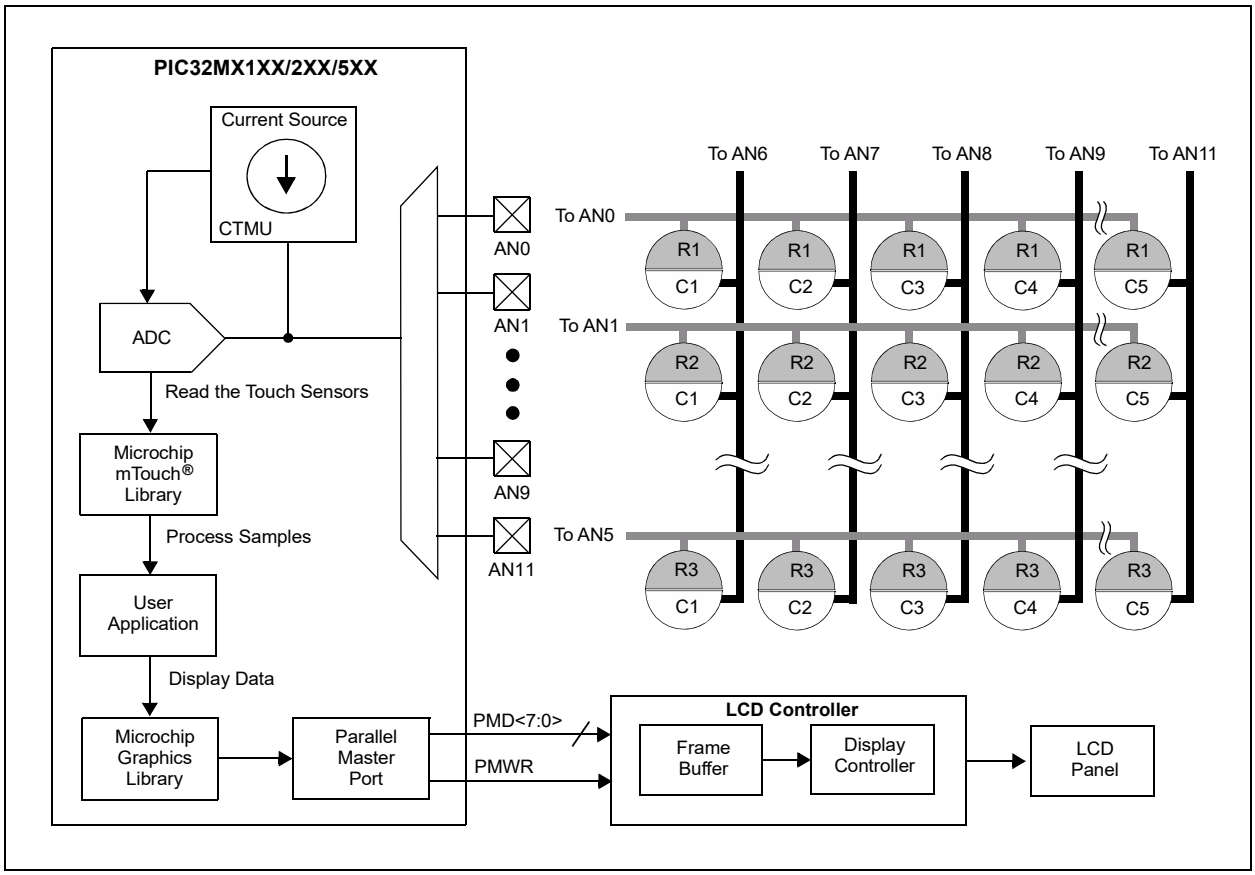

FIGURE 2-9: AUDIO PLAYBACK APPLICATION

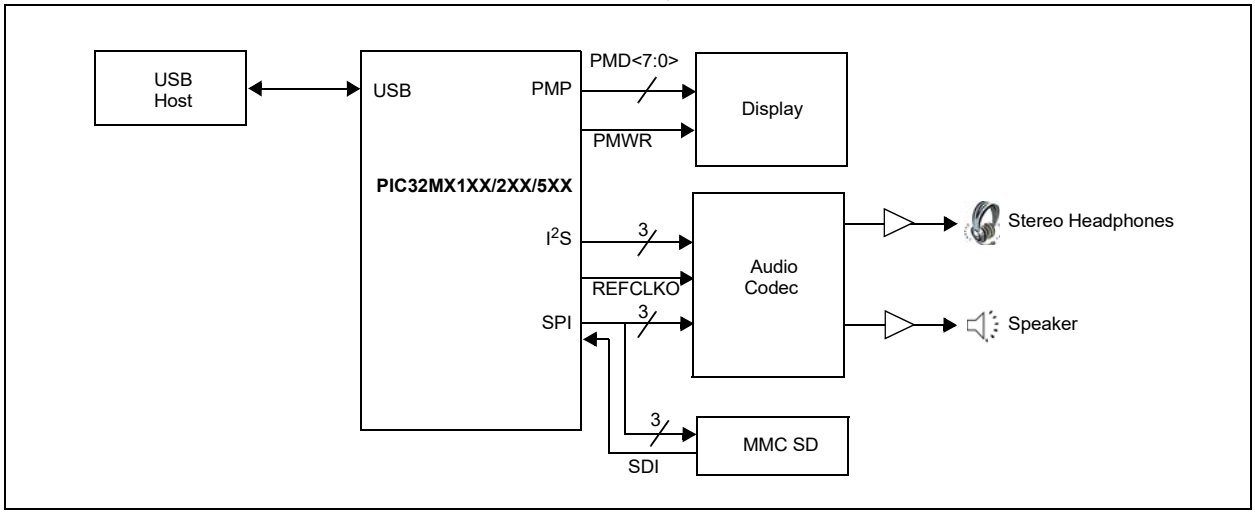

FIGURE 2-10: LOW-COST CONTROLLERLESS (LCC) GRAPHICS APPLICATION WITH PROJECTED CAPACITIVE TOUCH

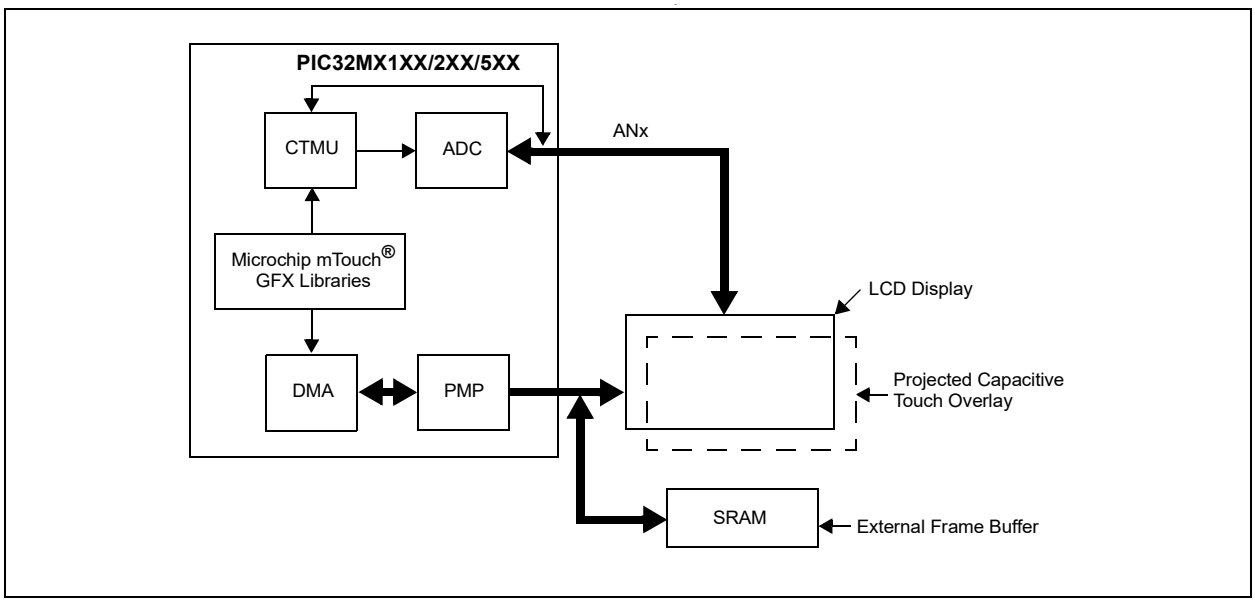

2.11 EMI/EMC/EFT (IEC 61000-4-4 and IEC 61000-4-2) Suppression Considerations

The use of LDO regulators is preferred to reduce overall system noise and provide a cleaner power source. However, when utilizing switching Buck-Boost regulators as the local power source for PIC32 devices, as well as in electrically noisy environments or test conditions required for IEC 61000-4-4 and IEC 61000-4-2, users must evaluate the use of T-Filters (i.e., L-C-L) on the power pins, as shown in Figure 2-11. In addition to a stable power source, using this type of T-Filter can greatly reduce susceptibility to EMI sources and events.

FIGURE 2-11: EMI/EMC/EFT SUPPRESSION CIRCUIT

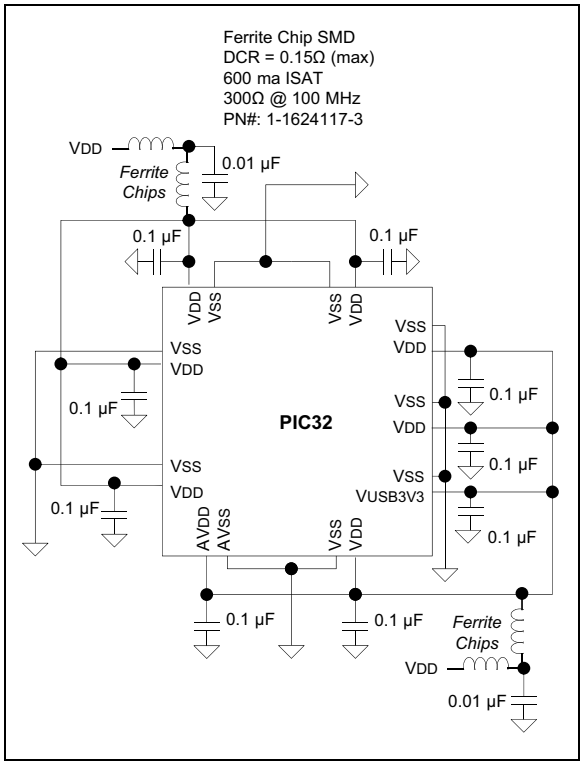

© 2014-2019 Microchip Technology Inc.

3.0 CPU

Note: This data sheet summarizes the features of the PIC32MX1XX/2XX/5XX 64/100-pin family of devices. It is not intended to be a comprehensive reference source. To complement the information in this data sheet, refer to **Section 2. "CPU"** (DS60001113) in the *"PIC32 Family Reference Manual"*, which is available from the Microchip web site (www.microchip.com/PIC32). Resources for the MIPS32® M4K® Processor Core are available at http://www.imgtec.com.

The the MIPS32® M4K® Processor Core is the heart of the PIC32MX1XX/2XX/5XX 64/100-pin device processor. The CPU fetches instructions, decodes each instruction, fetches source operands, executes each instruction and writes the results of instruction execution to the proper destinations.

3.1 Features

- 5-stage pipeline
- 32-bit address and data paths
- MIPS32® Enhanced Architecture (Release 2):
  - Multiply-accumulate and multiply-subtract instructions
  - Targeted multiply instruction
  - Zero/One detect instructions
  - `WAIT` instruction
  - Conditional move instructions (`MOVN`, `MOVZ`)
  - Vectored interrupts
  - Programmable exception vector base
  - Atomic interrupt enable/disable
  - Bit field manipulation instructions
- MIPS16e® Code Compression:
  - 16-bit encoding of 32-bit instructions to improve code density
  - Special PC-relative instructions for efficient loading of addresses and constants
  - `SAVE` and `RESTORE` macro instructions for setting up and tearing down stack frames within subroutines
  - Improved support for handling 8 and 16-bit data types
- Simple Fixed Mapping Translation (FMT) Mechanism:
- Simple Dual Bus Interface:
  - Independent 32-bit address and data buses
  - Transactions can be aborted to improve interrupt latency
- Autonomous Multiply/Divide Unit (MDU):
  - Maximum issue rate of one 32x16 multiply per clock
  - Maximum issue rate of one 32x32 multiply every other clock
  - Early-in iterative divide. Minimum 11 and maximum 33 clock latency (dividend (*rs*) sign extension-dependent)
- Power Control:
  - Minimum frequency: 0 MHz
  - Low-Power mode (triggered by `WAIT` instruction)
  - Extensive use of local gated clocks
- EJTAG Debug:
  - Support for single stepping
  - Virtual instruction and data address/value
  - Breakpoints

FIGURE 3-1: MIPS32® M4K® PROCESSOR CORE BLOCK DIAGRAM

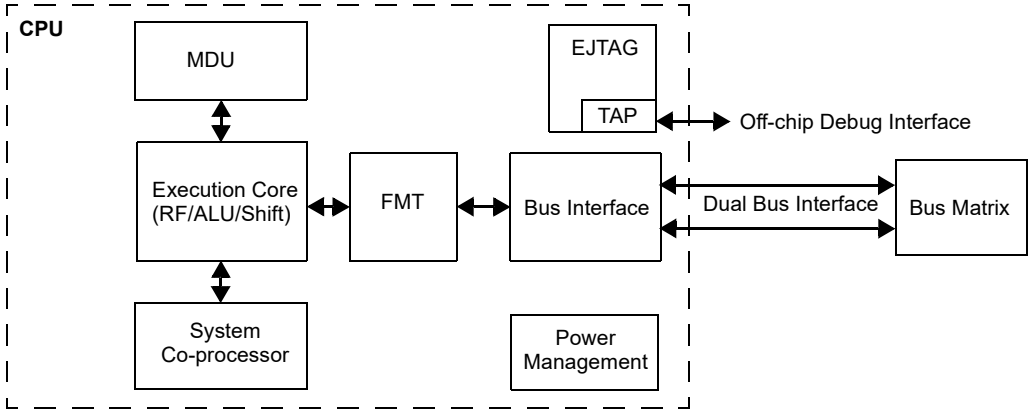

3.2 Architecture Overview

The MIPS32® M4K® processor core contains several logic blocks working together in parallel, providing an efficient high-performance computing engine. The following blocks are included with the core:

- Execution Unit
- Multiply/Divide Unit (MDU)
- System Control Coprocessor (CP0)
- Fixed Mapping Translation (FMT)
- Dual Internal Bus interfaces
- Power Management
- MIPS16e® Support
- Enhanced JTAG (EJTAG) Controller

3.2.1 EXECUTION UNIT

The MIPS32® M4K® processor core execution unit implements a load/store architecture with single-cycle ALU operations (logical, shift, add, subtract) and an autonomous multiply/divide unit. The core contains thirty-two 32-bit General Purpose Registers (GPRs) used for integer operations and address calculation.

The execution unit includes:

- 32-bit adder used for calculating the data address
- Address unit for calculating the next instruction address
- Logic for branch determination and branch target address calculation
- Load aligner
- Bypass multiplexers used to avoid stalls when executing instruction streams where data producing instructions are followed closely by consumers of their results
- Leading Zero/One detect unit for implementing the `CLZ` and `CLO` instructions
- Arithmetic Logic Unit (ALU) for performing bitwise logical operations
- Shifter and store aligner

3.2.2 MULTIPLY/DIVIDE UNIT (MDU)

The MIPS32® M4K® processor core includes a Multiply/Divide Unit (MDU) that contains a separate pipeline for multiply and divide operations. This pipeline operates in parallel with the Integer Unit (IU) pipeline and does not stall when the IU pipeline stalls. This allows MDU operations to be partially masked by system stalls and/or other integer unit instructions.

The high-performance MDU consists of a 32x16 booth recoded multiplier, result/accumulation registers (HI and LO), a divide state machine, and the necessary multiplexers and control logic. The first number shown ('32' of 32x16) represents the *rs* operand. The second number ('16' of 32x16) represents the *rt* operand. The PIC32 core only checks the value of the latter (*rt)* operand to determine how many times the operation must pass through the multiplier. The 16x16 and 32x16 operations pass through the multiplier once. A 32x32 operation passes through the multiplier twice.

The MDU supports execution of one 16x16 or 32x16 multiply operation every clock cycle; 32x32 multiply operations can be issued every other clock cycle. Appropriate interlocks are implemented to stall the issuance of back-to-back 32x32 multiply operations. The multiply operand size is automatically determined by logic built into the MDU.

Divide operations are implemented with a simple 1 bit per clock iterative algorithm. An early-in detection checks the sign extension of the dividend (*rs*) operand. If *rs* is 8 bits wide, 23 iterations are skipped. For a 16-bit wide *rs*, 15 iterations are skipped and for a 24-bit wide *rs*, 7 iterations are skipped. Any attempt to issue a subsequent `MDU` instruction while a divide is still active causes an IU pipeline stall until the divide operation is completed.

Table 3-1 lists the repeat rate (peak issue rate of cycles until the operation can be reissued) and latency (number of cycles until a result is available) for the PIC32 core multiply and divide instructions. The approximate latency and repeat rates are listed in terms of pipeline clocks.

TABLE 3-1: MIPS32® M4K® PROCESSOR CORE HIGH-PERFORMANCE INTEGER MULTIPLY/ DIVIDE UNIT LATENCIES AND REPEAT RATES

Op code	Operand Size (mul *rt*) (div *rs*)	Latency	Repeat Rate
`MULT/MULTU, MADD/MADDU, MSUB/MSUBU`	16 bits	1	1
	32 bits	2	2
`MUL`	16 bits	2	1
	32 bits	3	2
`DIV/DIVU`	8 bits	12	11
	16 bits	19	18
	24 bits	26	25
	32 bits	33	32

© 2014-2019 Microchip Technology Inc.

The MIPS architecture defines that the result of a multiply or divide operation be placed in the HI and LO registers. Using the Move-From-HI (MFHI) and Move-From-LO (MFLO) instructions, these values can be transferred to the General Purpose Register file.

In addition to the HI/LO targeted operations, the MIPS32® architecture also defines a multiply instruction, MUL, which places the least significant results in the primary register file instead of the HI/LO register pair. By avoiding the explicit MFLO instruction required when using the LO register, and by supporting multiple destination registers, the throughput of multiply-intensive operations is increased.

Two other instructions, Multiply-Add (MADD) and Multiply-Subtract (MSUB), are used to perform the multiply-accumulate and multiply-subtract operations. The MADD instruction multiplies two numbers and then adds the product to the current contents of the HI and LO registers. Similarly, the MSUB instruction multiplies two operands and then subtracts the product from the HI and LO registers. The MADD and MSUB operations are commonly used in DSP algorithms.

3.2.3 SYSTEM CONTROL COPROCESSOR (CP0)

In the MIPS architecture, CP0 is responsible for the virtual-to-physical address translation, the exception control system, the processor's diagnostics capability, the operating modes (Kernel, User and Debug) and whether interrupts are enabled or disabled. Configuration information, such as presence of options like MIPS16e®, is also available by accessing the CP0 registers, listed in Table 3-2.

TABLE 3-2: COPROCESSOR 0 REGISTERS

Register Number	Register Name	Function
0-6	Reserved	Reserved in the PIC32MX1XX/2XX/5XX 64/100-pin family core.
7	HWREna	Enables access via the RDHWR instruction to selected hardware registers.
8	BadVAddr(1)	Reports the address for the most recent address-related exception.
9	Count(1)	Processor cycle count.
10	Reserved	Reserved in the PIC32MX1XX/2XX/5XX 64/100-pin family core.
11	Compare(1)	Timer interrupt control.
12	Status(1)	Processor status and control.
12	IntCtl(1)	Interrupt system status and control.
13	Cause(1)	Cause of last general exception.
14	EPC(1)	Program counter at last exception.
15	PRId	Processor identification and revision.
15	EBASE	Exception vector base register.
16	Config	Configuration register.
16	Config1	Configuration register 1.
16	Config2	Configuration register 2.
16	Config3	Configuration register 3.
17-22	Reserved	Reserved in the PIC32MX1XX/2XX/5XX 64/100-pin family core.
23	Debug(2)	Debug control and exception status.
24	DEPC(2)	Program counter at last debug exception.
25-29	Reserved	Reserved in the PIC32MX1XX/2XX/5XX 64/100-pin family core.
30	ErrorEPC(1)	Program counter at last error.
31	DESAVE(2)	Debug handler scratchpad register.

Note 1: Registers used in exception processing.
2: Registers used during debug.

Coprocessor 0 also contains the logic for identifying and managing exceptions. Exceptions can be caused by a variety of sources, including alignment errors in data, external events or program errors. Table 3-3 lists the exception types in order of priority.

TABLE 3-3: MIPS32® M4K® PROCESSOR CORE EXCEPTION TYPES

Exception	Description
Reset	Assertion $\overline{\text{MCLR}}$ or a Power-on Reset (POR).
DSS	EJTAG debug single step.
DINT	EJTAG debug interrupt. Caused by the assertion of the external *EJ_DINT* input or by setting the EjtagBrk bit in the ECR register.
NMI	Assertion of NMI signal.
Interrupt	Assertion of unmasked hardware or software interrupt signal.
DIB	EJTAG debug hardware instruction break matched.
AdEL	Fetch address alignment error. Fetch reference to protected address.
IBE	Instruction fetch bus error.
DBp	EJTAG breakpoint (execution of `SDBBP` instruction).
Sys	Execution of `SYSCALL` instruction.
Bp	Execution of `BREAK` instruction.
RI	Execution of a reserved instruction.
CpU	Execution of a coprocessor instruction for a coprocessor that is not enabled.
CEU	Execution of a `CorExtend` instruction when `CorExtend` is not enabled.
Ov	Execution of an arithmetic instruction that overflowed.
Tr	Execution of a trap (when trap condition is true).
DDBL/DDBS	EJTAG Data Address Break (address only) or EJTAG data value break on store (address + value).
AdEL	Load address alignment error. Load reference to protected address.
AdES	Store address alignment error. Store to protected address.
DBE	Load or store bus error.
DDBL	EJTAG data hardware breakpoint matched in load data compare.

3.3 Power Management

The MIPS® M4K® processor core offers a number of power management features, including low-power design, active power management and power-down modes of operation. The core is a static design that supports slowing or Halting the clocks, which reduces system power consumption during Idle periods.

3.3.1 INSTRUCTION-CONTROLLED POWER MANAGEMENT

The mechanism for invoking Power-Down mode is through execution of the `WAIT` instruction. For more information on power management, see **Section 27.0 "Power-Saving Features"**.

3.3.2 LOCAL CLOCK GATING

The majority of the power consumed by the PIC32MX-1XX/2XX/5XX 64/100-pin family core is in the clock tree and clocking registers. The PIC32MX family uses extensive use of local gated-clocks to reduce this dynamic power consumption.

3.4 EJTAG Debug Support

The MIPS® M4K® processor core provides for an Enhanced JTAG (EJTAG) interface for use in the software debug of application and kernel code. In addition to standard User mode and Kernel modes of operation, the M4K® core provides a Debug mode that is entered after a debug exception (derived from a hardware breakpoint, single-step exception, etc.) is taken and continues until a Debug Exception Return (`DERET`) instruction is executed. During this time, the processor executes the debug exception handler routine.

The EJTAG interface operates through the Test Access Port (TAP), a serial communication port used for transferring test data in and out of the core. In addition to the standard JTAG instructions, special instructions defined in the EJTAG specification define which registers are selected and how they are used.

© 2014-2019 Microchip Technology Inc.

4.0 MEMORY ORGANIZATION

Note: This data sheet summarizes the features of the PIC32MX1XX/2XX/5XX 64/100-pin family of devices. It is not intended to be a comprehensive reference source.For detailed information, refer to **Section 3. "Memory Organization"** (DS60001115) in the *"PIC32 Family Reference Manual"*, which is available from the Microchip web site (www.microchip.com/PIC32).

PIC32MX1XX/2XX/5XX 64/100-pin microcontrollers provide 4 GB of unified virtual memory address space. All memory regions, including program, data memory, SFRs and Configuration registers, reside in this address space at their respective unique addresses. The program and data memories can be optionally partitioned into user and kernel memories. In addition, the data memory can be made executable, allowing PIC32MX1XX/2XX/5XX 64/100-pin devices to execute from data memory.

The key features include:

- 32-bit native data width
- Separate User (KUSEG) and Kernel (KSEG0/KSEG1) mode address space
- Flexible program Flash memory partitioning
- Flexible data RAM partitioning for data and program space
- Separate boot Flash memory for protected code
- Robust bus exception handling to intercept runaway code
- Simple memory mapping with Fixed Mapping Translation (FMT) unit

4.1 Memory Layout

PIC32MX1XX/2XX/5XX 64/100-pin microcontrollers implement two address schemes: virtual and physical. All hardware resources, such as program memory, data memory and peripherals, are located at their respective physical addresses. Virtual addresses are exclusively used by the CPU to fetch and execute instructions as well as access peripherals. Physical addresses are used by bus master peripherals, such as DMA and the Flash controller, that access memory independently of the CPU.

The memory maps for the PIC32MX1XX/2XX/5XX 64/100-pin devices are illustrated in Figure 4-1 through Figure 4-4.

FIGURE 4-1: MEMORY MAP FOR DEVICES WITH 64 KB OF PROGRAM MEMORY + 8 KB RAM

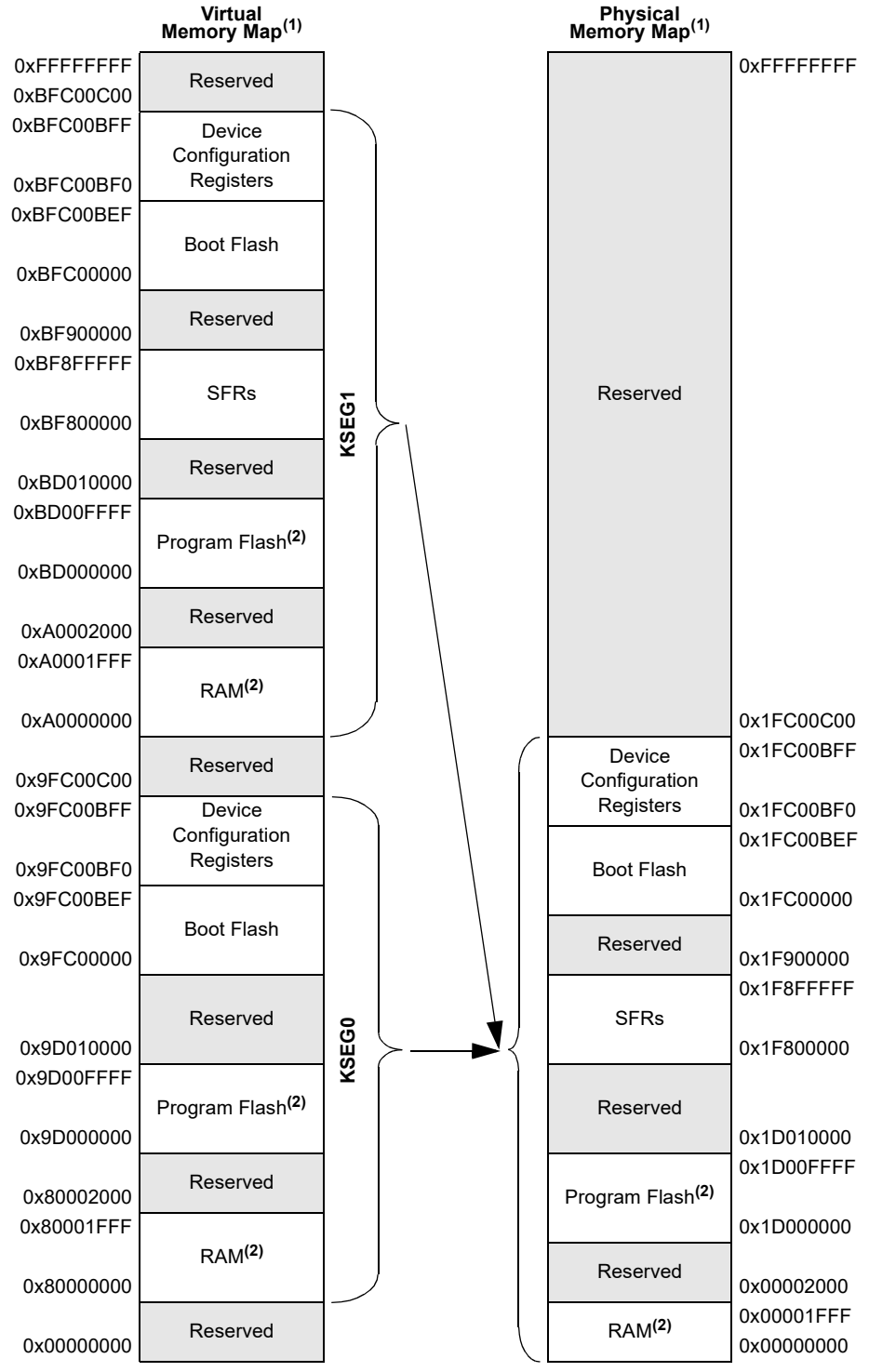

Note 1: Memory areas are not shown to scale.

2: The size of this memory region is programmable (see **Section 3. "Memory Organization"** (DS60001115) in the *"PIC32 Family Reference Manual"*) and can be changed by initialization code provided by end-user development tools (refer to the specific development tool documentation for information).

© 2014-2019 Microchip Technology Inc.

FIGURE 4-2: MEMORY MAP FOR DEVICES WITH 128 KB OF PROGRAM MEMORY + 16 KB RAM

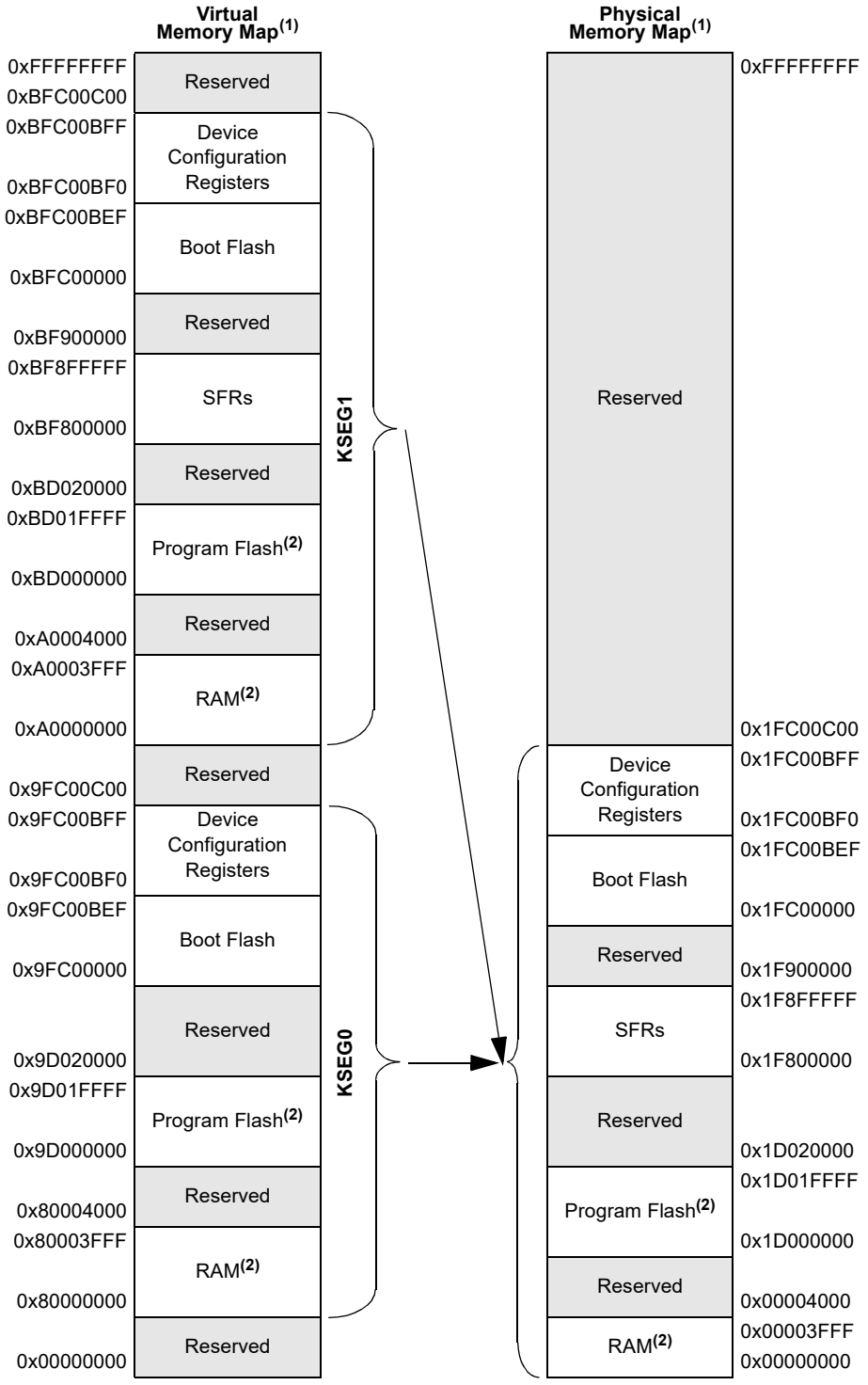

Note 1: Memory areas are not shown to scale.

2: The size of this memory region is programmable (see **Section 3. "Memory Organization"** (DS60001115) in the *"PIC32 Family Reference Manual"*) and can be changed by initialization code provided by end-user development tools (refer to the specific development tool documentation for information).

FIGURE 4-3: MEMORY MAP FOR DEVICES WITH 256 KB OF PROGRAM MEMORY + 32 KB RAM

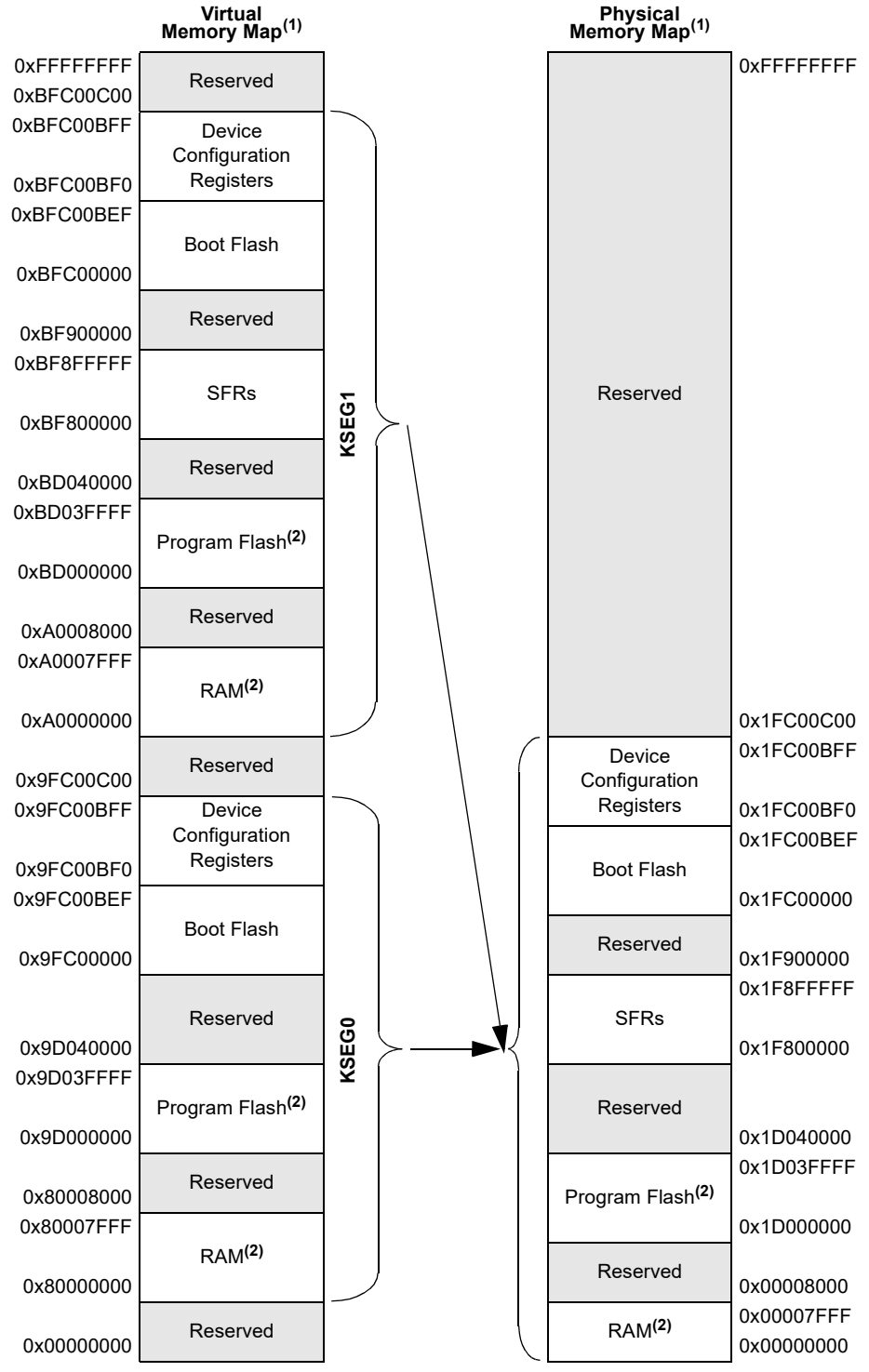

Note 1: Memory areas are not shown to scale.

2: The size of this memory region is programmable (see **Section 3. "Memory Organization"** (DS60001115) in the *"PIC32 Family Reference Manual"*) and can be changed by initialization code provided by end-user development tools (refer to the specific development tool documentation for information).

© 2014-2019 Microchip Technology Inc.

FIGURE 4-4: MEMORY MAP FOR DEVICES WITH 512 KB OF PROGRAM MEMORY + 64 KB RAM

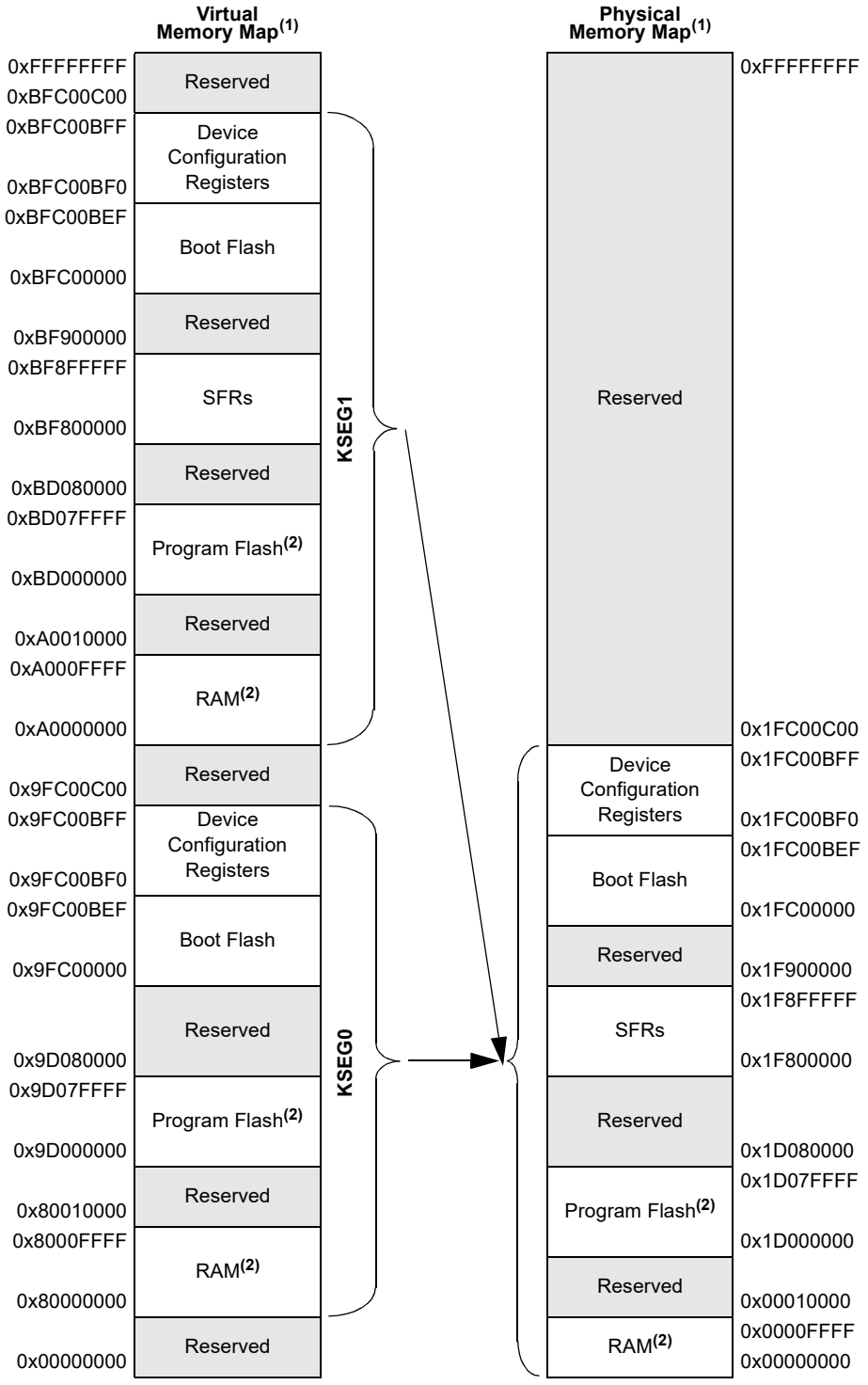

Note 1: Memory areas are not shown to scale.

2: The size of this memory region is programmable (see **Section 3. "Memory Organization"** (DS60001115) in the *"PIC32 Family Reference Manual"*) and can be changed by initialization code provided by end-user development tools (refer to the specific development tool documentation for information).

TABLE 4-1: SFR MEMORY MAP

Peripheral	Virtual Address	
	Base	Offset Start
Interrupt Controller	0xBF88	0x1000
Bus Matrix		0x2000
DMA		0x3000
USB		0x5000
PORTA-PORTG		0x6000
CAN1		0xB000
Watchdog Timer	0xBF80	0x0000
RTCC		0x0200
Timer1-Timer5		0x0600
IC1-IC5		0x2000
OC1-OC5		0x3000
I2C1-I2C2		0x5000
SPI1-SPI4		0x5800
UART1-UART5		0x6000
PMP		0x7000
ADC1		0x9000
DAC		0x9800
Comparator 1, 2, 3		0xA000
Oscillator		0xF000
Device and Revision ID		0xF200
Flash Controller		0xF400
PPS		0xFA00
Configuration	0xBFC0	0x0BF0

© 2014-2019 Microchip Technology Inc.

4.2 Special Function Register Maps

TABLE 4-2: BUS MATRIX REGISTER MAP

Virtual Address (BF88_#)	Register Name	Bit Range	Bits 31/15	30/14	29/13	28/12	27/11	26/10	25/9	24/8	23/7	22/6	21/5	20/4	19/3	18/2	17/1	16/0	All Resets
2000	BMXCON(1)	31:16	—	—	—	—	—	BMXCHEDMA	—	—	—	—	—	BMXERRIXI	BMXERRICD	BMXERRDMA	BMXERRDS	BMXERRIS	041F
		15:0	—	—	—	—	—	—	—	—	—	BMXWSDRM	—	—	—	BMXARB<2:0>			0047
2010	BMXDKPBA(1)	31:16	—	—	—	—	—	—	—	—	—	—	—	—	—	—	—	—	0000
		15:0	BMXDKPBA<15:0>																0000
2020	BMXDUDBA(1)	31:16	—	—	—	—	—	—	—	—	—	—	—	—	—	—	—	—	0000
		15:0	BMXDUDBA<15:0>																0000
2030	BMXDUPBA(1)	31:16	—	—	—	—	—	—	—	—	—	—	—	—	—	—	—	—	0000
		15:0	BMXDUPBA<15:0>																0000
2040	BMXDRMSZ	31:16	BMXDRMSZ<31:0>																xxxx
		15:0																	xxxx
2050	BMXPUPBA(1)	31:16	—	—	—	—	—	—	—	—	—	—	—	—	BMXPUPBA<19:16>				0000
		15:0	BMXPUPBA<15:0>																0000
2060	BMXPFMSZ	31:16	BMXPFMSZ<31:0>																xxxx
		15:0																	xxxx
2070	BMXBOOTSZ	31:16	BMXBOOTSZ<31:0>																0000
		15:0																	0000

Legend: x = unknown value on Reset; — = unimplemented, read as ‘0’. Reset values are shown in hexadecimal.

Note 1: This register has corresponding CLR, SET and INV registers at its virtual address, plus an offset of 0x4, 0x8 and 0xC, respectively. See **Section 11.2 “CLR, SET, and INV Registers”** for more information.

© 2014-2019 Microchip Technology Inc.

4.3 Control Registers

Register 4-1 through Register 4-8 are used for setting the RAM and Flash memory partitions for data and code.

REGISTER 4-1: BMXCON: BUS MATRIX CONFIGURATION REGISTER

Bit Range	Bit 31/23/15/7	Bit 30/22/14/6	Bit 29/21/13/5	Bit 28/20/12/4	Bit 27/19/11/3	Bit 26/18/10/2	Bit 25/17/9/1	Bit 24/16/8/0
31:24	U-0	U-0	U-0	U-0	U-0	U-0	U-0	U-0
	—	—	—	—	—	—	—	—
23:16	U-0	U-0	U-0	R/W-1	R/W-1	R/W-1	R/W-1	R/W-1
	—	—	—	BMX ERRIXI	BMX ERRICD	BMX ERRDMA	BMX ERRDS	BMX ERRIS
15:8	U-0	U-0	U-0	U-0	U-0	U-0	U-0	U-0
	—	—	—	—	—	—	—	—
7:0	U-0	R/W-1	U-0	U-0	U-0	R/W-0	R/W-0	R/W-1
	—	BMX WSDRM	—	—	—	BMXARB<2:0>		

Legend:		
R = Readable bit	W = Writable bit	U = Unimplemented bit, read as ‘0’
-n = Value at POR	‘1’ = Bit is set	‘0’ = Bit is cleared

bit 31-21 **Unimplemented:** Read as ‘0’

bit 20 **BMXERRIXI:** Enable Bus Error from IXI bit
1 = Enable bus error exceptions for unmapped address accesses initiated from IXI shared bus
0 = Disable bus error exceptions for unmapped address accesses initiated from IXI shared bus

bit 19 **BMXERRICD:** Enable Bus Error from ICD Debug Unit bit
1 = Enable bus error exceptions for unmapped address accesses initiated from ICD
0 = Disable bus error exceptions for unmapped address accesses initiated from ICD

bit 18 **BMXERRDMA:** Bus Error from DMA bit
1 = Enable bus error exceptions for unmapped address accesses initiated from DMA
0 = Disable bus error exceptions for unmapped address accesses initiated from DMA

bit 17 **BMXERRDS:** Bus Error from CPU Data Access bit (disabled in Debug mode)
1 = Enable bus error exceptions for unmapped address accesses initiated from CPU data access
0 = Disable bus error exceptions for unmapped address accesses initiated from CPU data access

bit 16 **BMXERRIS:** Bus Error from CPU Instruction Access bit (disabled in Debug mode)
1 = Enable bus error exceptions for unmapped address accesses initiated from CPU instruction access
0 = Disable bus error exceptions for unmapped address accesses initiated from CPU instruction access

bit 15-7 **Unimplemented:** Read as ‘0’

bit 6 **BMXWSDRM:** CPU Instruction or Data Access from Data RAM Wait State bit
1 = Data RAM accesses from CPU have one wait state for address setup
0 = Data RAM accesses from CPU have zero wait states for address setup

bit 5-3 **Unimplemented:** Read as ‘0’

bit 2-0 **BMXARB<2:0>:** Bus Matrix Arbitration Mode bits
111 = Reserved (using these configuration modes will produce undefined behavior)
•
•
•
011 = Reserved (using these configuration modes will produce undefined behavior)
010 = Arbitration Mode 2
001 = Arbitration Mode 1 (default)
000 = Arbitration Mode 0

© 2014-2019 Microchip Technology Inc.

REGISTER 4-2: BMXDKPBA: DATA RAM KERNEL PROGRAM BASE ADDRESS REGISTER

Bit Range	Bit 31/23/15/7	Bit 30/22/14/6	Bit 29/21/13/5	Bit 28/20/12/4	Bit 27/19/11/3	Bit 26/18/10/2	Bit 25/17/9/1	Bit 24/16/8/0
31:24	U-0	U-0	U-0	U-0	U-0	U-0	U-0	U-0
	—	—	—	—	—	—	—	—
23:16	U-0	U-0	U-0	U-0	U-0	U-0	U-0	U-0
	—	—	—	—	—	—	—	—
15:8	R/W-0	R/W-0	R/W-0	R/W-0	R/W-0	R/W-0	R-0	R-0
	BMXDKPBA<15:8>							
7:0	R-0	R-0	R-0	R-0	R-0	R-0	R-0	R-0
	BMXDKPBA<7:0>							

Legend:			
R = Readable bit	W = Writable bit	U = Unimplemented bit, read as ‘0’	
-n = Value at POR	‘1’ = Bit is set	‘0’ = Bit is cleared	x = Bit is unknown

bit 31-16 **Unimplemented:** Read as ‘0’

bit 15-10 **BMXDKPBA<15:10>:** DRM Kernel Program Base Address bits
When non-zero, this value selects the relative base address for kernel program space in RAM

bit 9-0 **BMXDKPBA<9:0>:** Read-Only bits
Value is always ‘0’, which forces 1 KB increments

Note 1: At Reset, the value in this register is forced to zero, which causes all of the RAM to be allocated to Kernel mode data usage.

2: The value in this register must be less than or equal to BMXDRMSZ.

REGISTER 4-3: BMXDUDBA: DATA RAM USER DATA BASE ADDRESS REGISTER

Bit Range	Bit 31/23/15/7	Bit 30/22/14/6	Bit 29/21/13/5	Bit 28/20/12/4	Bit 27/19/11/3	Bit 26/18/10/2	Bit 25/17/9/1	Bit 24/16/8/0
31:24	U-0	U-0	U-0	U-0	U-0	U-0	U-0	U-0
	—	—	—	—	—	—	—	—
23:16	U-0	U-0	U-0	U-0	U-0	U-0	U-0	U-0
	—	—	—	—	—	—	—	—
15:8	R/W-0	R/W-0	R/W-0	R/W-0	R/W-0	R/W-0	R-0	R-0
	BMXDUDBA<15:8>							
7:0	R-0	R-0	R-0	R-0	R-0	R-0	R-0	R-0
	BMXDUDBA<7:0>							

Legend:			
R = Readable bit	W = Writable bit	U = Unimplemented bit, read as ‘0’	
-n = Value at POR	‘1’ = Bit is set	‘0’ = Bit is cleared	x = Bit is unknown

bit 31-16 **Unimplemented:** Read as ‘0’

bit 15-10 **BMXDUDBA<15:10>:** DRM User Data Base Address bits

When non-zero, the value selects the relative base address for User mode data space in RAM, the value must be greater than BMXDKPBA.

bit 9-0 **BMXDUDBA<9:0>:** Read-Only bits

Value is always ‘0’, which forces 1 KB increments

Note 1: At Reset, the value in this register is forced to zero, which causes all of the RAM to be allocated to Kernel mode data usage.

2: The value in this register must be less than or equal to BMXDRMSZ.

© 2014-2019 Microchip Technology Inc.

REGISTER 4-4: BMXDUPBA: DATA RAM USER PROGRAM BASE ADDRESS REGISTER

Bit Range	Bit 31/23/15/7	Bit 30/22/14/6	Bit 29/21/13/5	Bit 28/20/12/4	Bit 27/19/11/3	Bit 26/18/10/2	Bit 25/17/9/1	Bit 24/16/8/0
31:24	U-0	U-0	U-0	U-0	U-0	U-0	U-0	U-0
	—	—	—	—	—	—	—	—
23:16	U-0	U-0	U-0	U-0	U-0	U-0	U-0	U-0
	—	—	—	—	—	—	—	—
15:8	R/W-0	R/W-0	R/W-0	R/W-0	R/W-0	R/W-0	R-0	R-0
	BMXDUPBA<15:8>							
7:0	R-0	R-0	R-0	R-0	R-0	R-0	R-0	R-0
	BMXDUPBA<7:0>							

Legend:			
R = Readable bit	W = Writable bit	U = Unimplemented bit, read as ‘0’	
-n = Value at POR	‘1’ = Bit is set	‘0’ = Bit is cleared	x = Bit is unknown

bit 31-16 **Unimplemented:** Read as ‘0’

bit 15-10 **BMXDUPBA<15:10>:** DRM User Program Base Address bits

When non-zero, the value selects the relative base address for User mode program space in RAM, BMXDUPBA must be greater than BMXDUDBA.

bit 9-0 **BMXDUPBA<9:0>:** Read-Only bits

Value is always ‘0’, which forces 1 KB increments

Note 1: At Reset, the value in this register is forced to zero, which causes all of the RAM to be allocated to Kernel mode data usage.

2: The value in this register must be less than or equal to BMXDRMSZ.

REGISTER 4-5: BMXDRMSZ: DATA RAM SIZE REGISTER

Bit Range	Bit 31/23/15/7	Bit 30/22/14/6	Bit 29/21/13/5	Bit 28/20/12/4	Bit 27/19/11/3	Bit 26/18/10/2	Bit 25/17/9/1	Bit 24/16/8/0
31:24	R	R	R	R	R	R	R	R
	BMXDRMSZ<31:24>							
23:16	R	R	R	R	R	R	R	R
	BMXDRMSZ<23:16>							
15:8	R	R	R	R	R	R	R	R
	BMXDRMSZ<15:8>							
7:0	R	R	R	R	R	R	R	R
	BMXDRMSZ<7:0>							

Legend:			
R = Readable bit	W = Writable bit	U = Unimplemented bit, read as ‘0’	
-n = Value at POR	‘1’ = Bit is set	‘0’ = Bit is cleared	x = Bit is unknown

bit 31-0 **BMXDRMSZ<31:0>:** Data RAM Memory (DRM) Size bits
Static value that indicates the size of the Data RAM in bytes:
0x00002000 = Device has 8 KB RAM
0x00004000 = Device has 16 KB RAM
0x00008000 = Device has 32 KB RAM
0x00010000 = Device has 64 KB RAM

REGISTER 4-6: BMXPUPBA: PROGRAM FLASH (PFM) USER PROGRAM BASE ADDRESS REGISTER

Bit Range	Bit 31/23/15/7	Bit 30/22/14/6	Bit 29/21/13/5	Bit 28/20/12/4	Bit 27/19/11/3	Bit 26/18/10/2	Bit 25/17/9/1	Bit 24/16/8/0
31:24	U-0	U-0	U-0	U-0	U-0	U-0	U-0	U-0
	—	—	—	—	—	—	—	—
23:16	U-0	U-0	U-0	U-0	R/W-0	R/W-0	R/W-0	R/W-0
	—	—	—	—	BMXPUPBA<19:16>			
15:8	R/W-0	R/W-0	R/W-0	R/W-0	R/W-0	R-0	R-0	R-0
	BMXPUPBA<15:8>							
7:0	R-0	R-0	R-0	R-0	R-0	R-0	R-0	R-0
	BMXPUPBA<7:0>							

Legend:			
R = Readable bit	W = Writable bit	U = Unimplemented bit, read as ‘0’	
-n = Value at POR	‘1’ = Bit is set	‘0’ = Bit is cleared	x = Bit is unknown

bit 31-20 **Unimplemented:** Read as ‘0’
bit 19-11 **BMXPUPBA<19:11>:** Program Flash (PFM) User Program Base Address bits
bit 10-0 **BMXPUPBA<10:0>:** Read-Only bits
Value is always ‘0’, which forces 2 KB increments

Note 1: At Reset, the value in this register is forced to zero, which causes all of the RAM to be allocated to Kernel mode data usage.
2: The value in this register must be less than or equal to BMXPFMSZ.

© 2014-2019 Microchip Technology Inc.

REGISTER 4-7: BMXPFMSZ: PROGRAM FLASH (PFM) SIZE REGISTER

Bit Range	Bit 31/23/15/7	Bit 30/22/14/6	Bit 29/21/13/5	Bit 28/20/12/4	Bit 27/19/11/3	Bit 26/18/10/2	Bit 25/17/9/1	Bit 24/16/8/0
31:24	R	R	R	R	R	R	R	R
	BMXPFMSZ<31:24>							
23:16	R	R	R	R	R	R	R	R
	BMXPFMSZ<23:16>							
15:8	R	R	R	R	R	R	R	R
	BMXPFMSZ<15:8>							
7:0	R	R	R	R	R	R	R	R
	BMXPFMSZ<7:0>							

Legend:			
R = Readable bit	W = Writable bit	U = Unimplemented bit, read as ‘0’	
-n = Value at POR	‘1’ = Bit is set	‘0’ = Bit is cleared	x = Bit is unknown

bit 31-0 **BMXPFMSZ<31:0>:** Program Flash Memory (PFM) Size bits
Static value that indicates the size of the PFM in bytes:
0x00010000 = Device has 64 KB Flash
0x00020000 = Device has 128 KB Flash
0x00040000 = Device has 256 KB Flash
0x00080000 = Device has 512 KB Flash

REGISTER 4-8: BMXBOOTSZ: BOOT FLASH (IFM) SIZE REGISTER

Bit Range	Bit 31/23/15/7	Bit 30/22/14/6	Bit 29/21/13/5	Bit 28/20/12/4	Bit 27/19/11/3	Bit 26/18/10/2	Bit 25/17/9/1	Bit 24/16/8/0
31:24	R	R	R	R	R	R	R	R
	BMXBOOTSZ<31:24>							
23:16	R	R	R	R	R	R	R	R
	BMXBOOTSZ<23:16>							
15:8	R	R	R	R	R	R	R	R
	BMXBOOTSZ<15:8>							
7:0	R	R	R	R	R	R	R	R
	BMXBOOTSZ<7:0>							

Legend:			
R = Readable bit	W = Writable bit	U = Unimplemented bit, read as ‘0’	
-n = Value at POR	‘1’ = Bit is set	‘0’ = Bit is cleared	x = Bit is unknown

bit 31-0 **BMXBOOTSZ<31:0>:** Boot Flash Memory (BFM) Size bits
Static value that indicates the size of the Boot PFM in bytes:
0x00000C00 = Device has 3 KB Boot Flash

NOTES:

© 2014-2019 Microchip Technology Inc.

5.0 INTERRUPT CONTROLLER

Note: This data sheet summarizes the features of the PIC32MX1XX/2XX/5XX 64/100-pin family of devices. It is not intended to be a comprehensive reference source. To complement the information in this data sheet, refer to **Section 8. "Interrupt Controller"** (DS60001108) in the *"PIC32 Family Reference Manual"*, which is available from the Microchip web site (www.microchip.com/PIC32).

PIC32MX1XX/2XX/5XX 64/100-pin devices generate interrupt requests in response to interrupt events from peripheral modules. The interrupt control module exists externally to the CPU logic and prioritizes the interrupt events before presenting them to the CPU.

The PIC32MX1XX/2XX/5XX 64/100-pin interrupt module includes the following features:

- Up to 76 interrupt sources
- Up to 46 interrupt vectors
- Single and multi-vector mode operations
- Five external interrupts with edge polarity control
- Interrupt proximity timer
- Seven user-selectable priority levels for each vector
- Four user-selectable subpriority levels within each priority
- Software can generate any interrupt
- User-configurable interrupt vector table location
- User-configurable interrupt vector spacing

Note: The dedicated shadow register set is not available on these devices.

FIGURE 5-1: INTERRUPT CONTROLLER MODULE BLOCK DIAGRAM

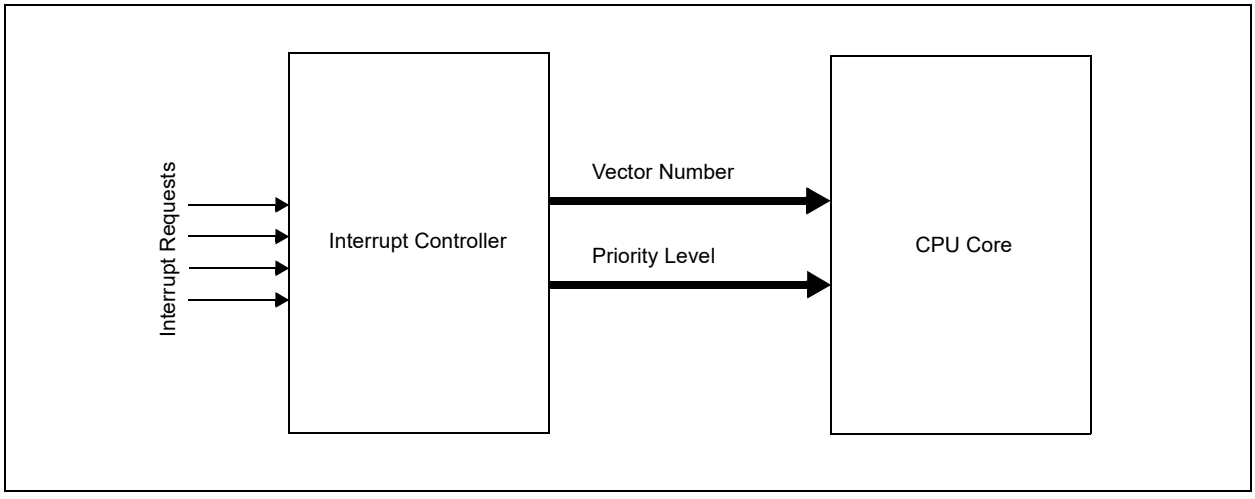

TABLE 5-1: INTERRUPT IRQ, VECTOR AND BIT LOCATION

Interrupt Source(1)	IRQ #	Vector #	Interrupt Bit Location				Persistent Interrupt
			Flag	Enable	Priority	Sub-priority	
Highest Natural Order Priority							
CT – Core Timer Interrupt	0	0	IFS0<0>	IEC0<0>	IPC0<4:2>	IPC0<1:0>	No
CS0 – Core Software Interrupt 0	1	1	IFS0<1>	IEC0<1>	IPC0<12:10>	IPC0<9:8>	No
CS1 – Core Software Interrupt 1	2	2	IFS0<2>	IEC0<2>	IPC0<20:18>	IPC0<17:16>	No
INT0 – External Interrupt	3	3	IFS0<3>	IEC0<3>	IPC0<28:26>	IPC0<25:24>	No
T1 – Timer1	4	4	IFS0<4>	IEC0<4>	IPC1<4:2>	IPC1<1:0>	No
IC1E – Input Capture 1 Error	5	5	IFS0<5>	IEC0<5>	IPC1<12:10>	IPC1<9:8>	Yes
IC1 – Input Capture 1	6	5	IFS0<6>	IEC0<6>	IPC1<12:10>	IPC1<9:8>	Yes
OC1 – Output Compare 1	7	6	IFS0<7>	IEC0<7>	IPC1<20:18>	IPC1<17:16>	No
INT1 – External Interrupt 1	8	7	IFS0<8>	IEC0<8>	IPC1<28:26>	IPC1<25:24>	No
T2 – Timer2	9	8	IFS0<9>	IEC0<9>	IPC2<4:2>	IPC2<1:0>	No
IC2E – Input Capture 2	10	9	IFS0<10>	IEC0<10>	IPC2<12:10>	IPC2<9:8>	Yes
IC2 – Input Capture 2	11	9	IFS0<11>	IEC0<11>	IPC2<12:10>	IPC2<9:8>	Yes
OC2 – Output Compare 2	12	10	IFS0<12>	IEC0<12>	IPC2<20:18>	IPC2<17:16>	No
INT2 – External Interrupt 2	13	11	IFS0<13>	IEC0<13>	IPC2<28:26>	IPC2<25:24>	No
T3 – Timer3	14	12	IFS0<14>	IEC0<14>	IPC3<4:2>	IPC3<1:0>	No
IC3E – Input Capture 3	15	13	IFS0<15>	IEC0<15>	IPC3<12:10>	IPC3<9:8>	Yes
IC3 – Input Capture 3	16	13	IFS0<16>	IEC0<16>	IPC3<12:10>	IPC3<9:8>	Yes
OC3 – Output Compare 3	17	14	IFS0<17>	IEC0<17>	IPC3<20:18>	IPC3<17:16>	No
INT3 – External Interrupt 3	18	15	IFS0<18>	IEC0<18>	IPC3<28:26>	IPC3<25:24>	No
T4 – Timer4	19	16	IFS0<19>	IEC0<19>	IPC4<4:2>	IPC4<1:0>	No
IC4E – Input Capture 4 Error	20	17	IFS0<20>	IEC0<20>	IPC4<12:10>	IPC4<9:8>	Yes
IC4 – Input Capture 4	21	17	IFS0<21>	IEC0<21>	IPC4<12:10>	IPC4<9:8>	Yes
OC4 – Output Compare 4	22	18	IFS0<22>	IEC0<22>	IPC4<20:18>	IPC4<17:16>	No
INT4 – External Interrupt 4	23	19	IFS0<23>	IEC0<23>	IPC4<28:26>	IPC4<25:24>	No
T5 – Timer5	24	20	IFS0<24>	IEC0<24>	IPC5<4:2>	IPC5<1:0>	No
IC5E – Input Capture 5 Error	25	21	IFS0<25>	IEC0<25>	IPC5<12:10>	IPC5<9:8>	Yes
IC5 – Input Capture 5	26	21	IFS0<26>	IEC0<26>	IPC5<12:10>	IPC5<9:8>	Yes
OC5 – Output Compare 5	27	22	IFS0<27>	IEC0<27>	IPC5<20:18>	IPC5<17:16>	No
AD1 – ADC1 Convert done	28	23	IFS0<28>	IEC0<28>	IPC5<28:26>	IPC5<25:24>	Yes
FSCM – Fail-Safe Clock Monitor	29	24	IFS0<29>	IEC0<29>	IPC6<4:2>	IPC6<1:0>	No
RTCC – Real-Time Clock and Calendar	30	25	IFS0<30>	IEC0<30>	IPC6<12:10>	IPC6<9:8>	No
FCE – Flash Control Event	31	26	IFS0<31>	IEC0<31>	IPC6<20:18>	IPC6<17:16>	No
CMP1 – Comparator Interrupt	32	27	IFS1<0>	IEC1<0>	IPC6<28:26>	IPC6<25:24>	No
CMP2 – Comparator Interrupt	33	28	IFS1<1>	IEC1<1>	IPC7<4:2>	IPC7<1:0>	No
USB – USB Interrupts	34	29	IFS1<2>	IEC1<2>	IPC7<12:10>	IPC7<9:8>	Yes
SPI1E – SPI1 Fault	35	30	IFS1<3>	IEC1<3>	IPC7<20:18>	IPC7<17:16>	Yes
SPI1RX – SPI1 Receive Done	36	30	IFS1<4>	IEC1<4>	IPC7<20:18>	IPC7<17:16>	Yes
SPI1TX – SPI1 Transfer Done	37	30	IFS1<5>	IEC1<5>	IPC7<20:18>	IPC7<17:16>	Yes
U1E – UART1 Fault	38	31	IFS1<6>	IEC1<6>	IPC7<28:26>	IPC7<25:24>	Yes
U1RX – UART1 Receive Done	39	31	IFS1<7>	IEC1<7>	IPC7<28:26>	IPC7<25:24>	Yes
U1TX – UART1 Transfer Done	40	31	IFS1<8>	IEC1<8>	IPC7<28:26>	IPC7<25:24>	Yes
I2C1B – I2C1 Bus Collision Event	41	32	IFS1<9>	IEC1<9>	IPC8<4:2>	IPC8<1:0>	Yes
I2C1S – I2C1 Slave Event	42	32	IFS1<10>	IEC1<10>	IPC8<4:2>	IPC8<1:0>	Yes
I2C1M – I2C1 Master Event	43	32	IFS1<11>	IEC1<11>	IPC8<4:2>	IPC8<1:0>	Yes

Note 1: Not all interrupt sources are available on all devices. See **TABLE 1: "PIC32MX1XX/2XX/5XX 64/100-pin Controller Family Features"** for the list of available peripherals.

2: This interrupt source is not available on 64-pin devices.

© 2014-2019 Microchip Technology Inc.

TABLE 5-1: INTERRUPT IRQ, VECTOR AND BIT LOCATION (CONTINUED)

Interrupt Source(1)	IRQ #	Vector #	Interrupt Bit Location				Persistent Interrupt
			Flag	Enable	Priority	Sub-priority	
CNA – PORTA Input Change Interrupt	44	33	IFS1<12>	IEC1<12>	IPC8<12:10>	IPC8<9:8>	Yes
CNB – PORTB Input Change Interrupt	45	33	IFS1<13>	IEC1<13>	IPC8<12:10>	IPC8<9:8>	Yes
CNC – PORTC Input Change Interrupt	46	33	IFS1<14>	IEC1<14>	IPC8<12:10>	IPC8<9:8>	Yes
CND – PORTD Input Change Interrupt	47	33	IFS1<15>	IEC1<15>	IPC8<12:10>	IPC8<9:8>	Yes
CNE – PORTE Input Change Interrupt	48	33	IFS1<16>	IEC1<16>	IPC8<12:10>	IPC8<9:8>	Yes
CNF – PORTF Input Change Interrupt	49	33	IFS1<17>	IEC1<17>	IPC8<12:10>	IPC8<9:8>	Yes
CNG – PORTG Input Change Interrupt	50	33	IFS1<18>	IEC1<18>	IPC8<12:10>	IPC8<9:8>	Yes
PMP – Parallel Master Port	51	34	IFS1<19>	IEC1<19>	IPC8<20:18>	IPC8<17:16>	Yes
PMPE – Parallel Master Port Error	52	34	IFS1<20>	IEC1<20>	IPC8<20:18>	IPC8<17:16>	Yes
SPI2E – SPI2 Fault	53	35	IFS1<21>	IEC1<21>	IPC8<28:26>	IPC8<25:24>	Yes
SPI2RX – SPI2 Receive Done	54	35	IFS1<22>	IEC1<22>	IPC8<28:26>	IPC8<25:24>	Yes
SPI2TX – SPI2 Transfer Done	55	35	IFS1<23>	IEC1<23>	IPC8<28:26>	IPC8<25:24>	Yes
U2E – UART2 Error	56	36	IFS1<24>	IEC1<24>	IPC9<4:2>	IPC9<1:0>	Yes
U2RX – UART2 Receiver	57	36	IFS1<25>	IEC1<25>	IPC9<4:2>	IPC9<1:0>	Yes
U2TX – UART2 Transmitter	58	36	IFS1<26>	IEC1<26>	IPC9<4:2>	IPC9<1:0>	Yes
I2C2B – I2C2 Bus Collision Event	59	37	IFS1<27>	IEC1<27>	IPC9<12:10>	IPC9<9:8>	Yes
I2C2S – I2C2 Slave Event	60	37	IFS1<28>	IEC1<28>	IPC9<12:10>	IPC9<9:8>	Yes
I2C2M – I2C2 Master Event	61	37	IFS1<29>	IEC1<29>	IPC9<12:10>	IPC9<9:8>	Yes
U3E – UART3 Error	62	38	IFS1<30>	IEC1<30>	IPC9<20:18>	IPC9<17:16>	Yes
U3RX – UART3 Receiver	63	38	IFS1<31>	IEC1<31>	IPC9<20:18>	IPC9<17:16>	Yes
U3TX – UART3 Transmitter	64	38	IFS2<0>	IEC2<0>	IPC9<20:18>	IPC9<17:16>	Yes
U4E – UART4 Error	65	39	IFS2<1>	IEC2<1>	IPC9<28:26>	IPC9<25:24>	Yes
U4RX – UART4 Receiver	66	39	IFS2<2>	IEC2<2>	IPC9<28:26>	IPC9<25:24>	Yes
U4TX – UART4 Transmitter	67	39	IFS2<3>	IEC2<3>	IPC9<28:26>	IPC9<25:24>	Yes
U5E – UART5 Error(2)	68	40	IFS2<4>	IEC2<4>	IPC10<4:2>	IPC10<1:0>	Yes
U5RX – UART5 Receiver(2)	69	40	IFS2<5>	IEC2<5>	IPC10<4:2>	IPC10<1:0>	Yes
U5TX – UART5 Transmitter(2)	70	40	IFS2<6>	IEC2<6>	IPC10<4:2>	IPC10<1:0>	Yes
CTMU – CTMU Event(2)	71	41	IFS2<7>	IEC2<7>	IPC10<12:10>	IPC10<9:8>	Yes
DMA0 – DMA Channel 0	72	42	IFS2<8>	IEC2<8>	IPC10<20:18>	IPC10<17:16>	No
DMA1 – DMA Channel 1	73	43	IFS2<9>	IEC2<9>	IPC10<28:26>	IPC10<25:24>	No
DMA2 – DMA Channel 2	74	44	IFS2<10>	IEC2<10>	IPC11<4:2>	IPC11<1:0>	No
DMA3 – DMA Channel 3	75	45	IFS2<11>	IEC2<11>	IPC11<12:10>	IPC11<9:8>	No
CMP3 – Comparator 3 Interrupt	76	46	IFS2<12>	IEC2<12>	IPC11<20:18>	IPC11<17:16>	No
CAN1 – CAN1 Event	77	47	IFS2<13>	IEC2<13>	IPC11<28:26>	IPC11<25:24>	Yes
SPI3E – SPI3 Fault	78	48	IFS2<14>	IEC2<14>	IPC12<4:2>	IPC12<1:0>	Yes
SPI3RX – SPI3 Receive Done	79	48	IFS2<15>	IEC2<15>	IPC12<4:2>	IPC12<1:0>	Yes
SPI3TX – SPI3 Transfer Done	80	48	IFS2<16>	IEC2<16>	IPC12<4:2>	IPC12<1:0>	Yes
SPI4E – SPI4 Fault(2)	81	49	IFS2<17>	IEC2<17>	IPC12<12:10>	IPC12<9:8>	Yes
SPI4RX – SPI4 Receive Done(2)	82	49	IFS2<18>	IEC2<18>	IPC12<12:10>	IPC12<9:8>	Yes
SPI4TX – SPI4 Transfer Done(2)	83	49	IFS2<19>	IEC2<19>	IPC12<12:10>	IPC12<9:8>	Yes
Lowest Natural Order Priority							

Note 1: Not all interrupt sources are available on all devices. See **TABLE 1: "PIC32MX1XX/2XX/5XX 64/100-pin Controller Family Features"** for the list of available peripherals.

2: This interrupt source is not available on 64-pin devices.

5.1 Interrupts Control Registers

TABLE 5-2: INTERRUPT REGISTER MAP

Virtual Address (BF88_#)	Register Name[3]	Bit Range	Bits 31/15	30/14	29/13	28/12	27/11	26/10	25/9	24/8	23/7	22/6	21/5	20/4	19/3	18/2	17/1	16/0	All Resets
1000	INTCON	31:16	—	—	—	—	—	—	—	—	—	—	—	—	—	—	—	—	0000
		15:0	—	—	—	MVEC	—	TPC<2:0>			—	—	—	INT4EP	INT3EP	INT2EP	INT1EP	INT0EP	0000
1010	INTSTAT[4]	31:16	—	—	—	—	—	—	—	—	—	—	—	—	—	—	—	—	0000
		15:0	—	—	—	—	—	SRIPL<2:0>			—	—	VEC<5:0>						0000
1020	IPTMR	31:16	IPTMR<31:0>																0000
		15:0																	0000
1030	IFS0	31:16	FCEIF	RTCCIF	FSCMIF	AD1IF	OC5IF	IC5IF	IC5EIF	T5IF	INT4IF	OC4IF	IC4IF	IC4EIF	T4IF	INT3IF	OC3IF	IC3IF	0000
		15:0	IC3EIF	T3IF	INT2IF	OC2IF	IC2IF	IC2EIF	T2IF	INT1IF	OC1IF	IC1IF	IC1EIF	T1IF	INT0IF	CS1IF	CS0IF	CTIF	0000
1040	IFS1	31:16	U3RXIF	U3EIF	I2C2MIF	I2C2SIF	I2C2BIF	U2TXIF	U2RXIF	U2EIF	SPI2TXIF	SPI2RXIF	SPI2EIF	PMPEIF	PMPIF	CNGIF	CNFIF	CNEIF	0000
		15:0	CNDIF	CNCIF	CNBIF	CNAIF	I2C1MIF	I2C1SIF	I2C1BIF	U1TXIF	U1RXIF	U1EIF	SPI1TXIF	SPI1RXIF	SPI1EIF	USBIF[2]	CMP2IF	CMP1IF	0000
1050	IFS2	31:16	—	—	—	—	—	—	—	—	—	—	—	—	SPI4TXIF[1]	SPI4RXIF[1]	SPI4EIF[1]	SPI3TXIF	0000
		15:0	SPI3RXIF	SPI3EIF	CANIF	CMP3IF	DMA3IF	DMA2IF	DMA1IF	DMA0IF	CTMUIF	U5TXIF[1]	U5RXIF[1]	U5EIF[1]	U4TXIF	U4RXIF	U4EIF	U3TXIF	0000
1060	IEC0	31:16	FCEIE	RTCCIE	FSCMIE	AD1IE	OC5IE	IC5IE	IC5EIE	T5IE	INT4IE	OC4IE	IC4IE	IC4EIE	T4IE	INT3IE	OC3IE	IC3IE	0000
		15:0	IC3EIE	T3IE	INT2IE	OC2IE	IC2IE	IC2EIE	T2IE	INT1IE	OC1IE	IC1IE	IC1EIE	T1IE	INT0IE	CS1IE	CS0IE	CTIE	0000
1070	IEC1	31:16	U3RXIE	U3EIE	I2C2MIE	I2C2SIE	I2C2BIE	U2TXIE	U2RXIE	U2EIE	SPI2TXIE	SPI2RXIE	SPI2EIE	PMPEIE	PMPIE	CNGIE	CNFIE	CNEIE	0000
		15:0	CNDIE	CNCIE	CNBIE	CNAIE	I2C1MIE	I2C1SIE	I2C1BIE	U1TXIE	U1RXIE	U1EIE	SPI1TXIE	SPI1RXIE	SPI1EIE	USBIE[2]	CMP2IE	CMP1IE	0000
1080	IEC2	31:16	—	—	—	—	—	—	—	—	—	—	—	—	—	—	—	—	0000
		15:0	—	—	—	—	DMA3IE	DMA2IE	DMA1IE	DMA0IE	CTMUIE	U5TXIE[1]	U5RXIE[1]	U5EIE[1]	U4TXIE	U4RXIE	U4EIE	U3TXIE	0000
1090	IPC0	31:16	—	—	—	INT0IP<2:0>			INT0IS<1:0>		—	—	—	CS1IP<2:0>			CS1IS<1:0>		0000
		15:0	—	—	—	CS0IP<2:0>			CS0IS<1:0>		—	—	—	CTIP<2:0>			CTIS<1:0>		0000
10A0	IPC1	31:16	—	—	—	INT1IP<2:0>			INT1IS<1:0>		—	—	—	OC1IP<2:0>			OC1IS<1:0>		0000
		15:0	—	—	—	IC1IP<2:0>			IC1IS<1:0>		—	—	—	T1IP<2:0>			T1IS<1:0>		0000
10B0	IPC2	31:16	—	—	—	INT2IP<2:0>			INT2IS<1:0>		—	—	—	OC2IP<2:0>			OC2IS<1:0>		0000
		15:0	—	—	—	IC2IP<2:0>			IC2IS<1:0>		—	—	—	T2IP<2:0>			T2IS<1:0>		0000
10C0	IPC3	31:16	—	—	—	INT3IP<2:0>			INT3IS<1:0>		—	—	—	OC3IP<2:0>			OC3IS<1:0>		0000
		15:0	—	—	—	IC3IP<2:0>			IC3IS<1:0>		—	—	—	T3IP<2:0>			T3IS<1:0>		0000
10D0	IPC4	31:16	—	—	—	INT4IP<2:0>			INT4IS<1:0>		—	—	—	OC4IP<2:0>			OC4IS<1:0>		0000
		15:0	—	—	—	IC4IP<2:0>			IC4IS<1:0>		—	—	—	T4IP<2:0>			T4IS<1:0>		0000

Legend: x = unknown value on Reset; — = unimplemented, read as '0'. Reset values are shown in hexadecimal.

Note 1: This bit is only available on 100-pin devices.

2: This bit is only implemented on devices with a USB module.

3: With the exception of those noted, all registers in this table have corresponding CLR, SET and INV registers at their virtual addresses, plus offsets of 0x4 0x8 and 0xC, respectively. See **Section 11.2 "CLR, SET, and INV Registers"** for more information.

4: This register does not have associated CLR, SET, and INV registers.

5: This bit is only implemented on devices with a CAN module.

© 2014-2019 Microchip Technology Inc.

TABLE 5-2: INTERRUPT REGISTER MAP (CONTINUED)

Virtual Address (BF88_#)	Register Name(3)	Bit Range	Bits																All Resets
			31/15	30/14	29/13	28/12	27/11	26/10	25/9	24/8	23/7	22/6	21/5	20/4	19/3	18/2	17/1	16/0	
10E0	IPC5	31:16	—	—	—	AD1IP<2:0>			AD1IS<1:0>		—	—	—	OC5IP<2:0>			OC5IS<1:0>		0000
		15:0	—	—	—	IC5IP<2:0>			IC5IS<1:0>		—	—	—	T5IP<2:0>			T5IS<1:0>		0000
10F0	IPC6	31:16	—	—	—	CMP1IP<2:0>			CMP1IS<1:0>		—	—	—	FCEIP<2:0>			FCEIS<1:0>		0000
		15:0	—	—	—	RTCCIP<2:0>			RTCCIS<1:0>		—	—	—	FSCMIP<2:0>			FSCMIS<1:0>		0000
1100	IPC7	31:16	—	—	—	U1IP<2:0>			U1IS<1:0>		—	—	—	SPI1IP<2:0>			SPI1IS<1:0>		0000
		15:0	—	—	—	USBIP<2:0>(2)			USBIS<1:0>(2)		—	—	—	CMP2IP<2:0>			CMP2IS<1:0>		0000
1110	IPC8	31:16	—	—	—	SPI2IP<2:0>			SPI2IS<1:0>		—	—	—	PMPIP<2:0>			PMPIS<1:0>		0000
		15:0	—	—	—	CNIP<2:0>			CNIS<1:0>		—	—	—	I2C1IP<2:0>			I2C1IS<1:0>		0000
1120	IPC9	31:16	—	—	—	U4IP<2:0>			U4IS<1:0>		—	—	—	U3IP<2:0>			U3IS<1:0>		0000
		15:0	—	—	—	I2C2IP<2:0>			I2C2IS<1:0>		—	—	—	U2IP<2:0>			U2IS<1:0>		0000
1130	IPC10	31:16	—	—	—	DMA1IP<2:0>			DMA1IS<1:0>		—	—	—	DMA0IP<2:0>			DMA0IS<1:0>		0000
		15:0	—	—	—	CTMUIP<2:0>			CTMUIS<1:0>		—	—	—	U5IP<2:0>			U5IS<1:0>		0000
1140	IPC11	31:16	—	—	—	CANIP<2:0>(5)			CANIS<1:0>(5)		—	—	—	CMP3IP<2:0>			CMP3IS<1:0>		0000
		15:0	—	—	—	DMA3IP<2:0>			DMA3IS<1:0>		—	—	—	DMA2IP<2:0>			DMA2IS<1:0>		0000
1150	IPC12	31:16	—	—	—	—	—	—	—	—	—	—	—	—	—	—	—	—	0000
		15:0	—	—	—	SPI4P<2:0>(1)			SPI4S<1:0>(1)		—	—	—	SPI3P<2:0>			SPI3S<1:0>		0000

Legend: x = unknown value on Reset; — = unimplemented, read as '0'. Reset values are shown in hexadecimal.

Note 1: This bit is only available on 100-pin devices.

2: This bit is only implemented on devices with a USB module.

3: With the exception of those noted, all registers in this table have corresponding CLR, SET and INV registers at their virtual addresses, plus offsets of 0x4 0x8 and 0xC, respectively. See **Section 11.2 "CLR, SET, and INV Registers"** for more information.

4: This register does not have associated CLR, SET, and INV registers.

5: This bit is only implemented on devices with a CAN module.

© 2014-2019 Microchip Technology Inc.

REGISTER 5-1: INTCON: INTERRUPT CONTROL REGISTER

Bit Range	Bit 31/23/15/7	Bit 30/22/14/6	Bit 29/21/13/5	Bit 28/20/12/4	Bit 27/19/11/3	Bit 26/18/10/2	Bit 25/17/9/1	Bit 24/16/8/0
31:24	U-0	U-0	U-0	U-0	U-0	U-0	U-0	U-0
	—	—	—	—	—	—	—	—
23:16	U-0	U-0	U-0	U-0	U-0	U-0	U-0	U-0
	—	—	—	—	—	—	—	—
15:8	U-0	U-0	U-0	R/W-0	U-0	R/W-0	R/W-0	R/W-0
	—	—	—	MVEC	—	TPC<2:0>		
7:0	U-0	U-0	U-0	R/W-0	R/W-0	R/W-0	R/W-0	R/W-0
	—	—	—	INT4EP	INT3EP	INT2EP	INT1EP	INT0EP

Legend:			
R = Readable bit	W = Writable bit	U = Unimplemented bit, read as ‘0’	
-n = Value at POR	‘1’ = Bit is set	‘0’ = Bit is cleared	x = Bit is unknown

bit 31-13 **Unimplemented:** Read as ‘0’

bit 12 **MVEC:** Multi Vector Configuration bit
1 = Interrupt controller configured for multi vectored mode
0 = Interrupt controller configured for single vectored mode

bit 11 **Unimplemented:** Read as ‘0’

bit 10-8 **TPC<2:0>:** Interrupt Proximity Timer Control bits
111 = Interrupts of group priority 7 or lower start the Interrupt Proximity timer
110 = Interrupts of group priority 6 or lower start the Interrupt Proximity timer
101 = Interrupts of group priority 5 or lower start the Interrupt Proximity timer
100 = Interrupts of group priority 4 or lower start the Interrupt Proximity timer
011 = Interrupts of group priority 3 or lower start the Interrupt Proximity timer
010 = Interrupts of group priority 2 or lower start the Interrupt Proximity timer
001 = Interrupts of group priority 1 start the Interrupt Proximity timer
000 = Disables Interrupt Proximity timer

bit 7-5 **Unimplemented:** Read as ‘0’

bit 4 **INT4EP:** External Interrupt 4 Edge Polarity Control bit
1 = Rising edge
0 = Falling edge

bit 3 **INT3EP:** External Interrupt 3 Edge Polarity Control bit
1 = Rising edge
0 = Falling edge

bit 2 **INT2EP:** External Interrupt 2 Edge Polarity Control bit
1 = Rising edge
0 = Falling edge

bit 1 **INT1EP:** External Interrupt 1 Edge Polarity Control bit
1 = Rising edge
0 = Falling edge

bit 0 **INT0EP:** External Interrupt 0 Edge Polarity Control bit
1 = Rising edge
0 = Falling edge

© 2014-2019 Microchip Technology Inc.

REGISTER 5-2: INTSTAT: INTERRUPT STATUS REGISTER

Bit Range	Bit 31/23/15/7	Bit 30/22/14/6	Bit 29/21/13/5	Bit 28/20/12/4	Bit 27/19/11/3	Bit 26/18/10/2	Bit 25/17/9/1	Bit 24/16/8/0
31:24	U-0	U-0	U-0	U-0	U-0	U-0	U-0	U-0
	—	—	—	—	—	—	—	—
23:16	U-0	U-0	U-0	U-0	U-0	U-0	U-0	U-0
	—	—	—	—	—	—	—	—
15:8	U-0	U-0	U-0	U-0	U-0	R/W-0	R/W-0	R/W-0
	—	—	—	—	—	SRIPL<2:0>(1)		
7:0	U-0	U-0	R/W-0	R/W-0	R/W-0	R/W-0	R/W-0	R/W-0
	—	—	VEC<5:0>(1)					

Legend:			
R = Readable bit	W = Writable bit	U = Unimplemented bit, read as ‘0’	
-n = Value at POR	‘1’ = Bit is set	‘0’ = Bit is cleared	x = Bit is unknown

bit 31-11 **Unimplemented:** Read as ‘0’

bit 10-8 **SRIPL<2:0>:** Requested Priority Level bits(1)

111-000 = The priority level of the latest interrupt presented to the CPU

bit 7-6 **Unimplemented:** Read as ‘0’

bit 5-0 **VEC<5:0>:** Interrupt Vector bits(1)

11111-00000 = The interrupt vector that is presented to the CPU

Note 1: This value should only be used when the interrupt controller is configured for Single Vector mode.

REGISTER 5-3: IPTMR: INTERRUPT PROXIMITY TIMER REGISTER

Bit Range	Bit 31/23/15/7	Bit 30/22/14/6	Bit 29/21/13/5	Bit 28/20/12/4	Bit 27/19/11/3	Bit 26/18/10/2	Bit 25/17/9/1	Bit 24/16/8/0
31:24	R/W-0	R/W-0	R/W-0	R/W-0	R/W-0	R/W-0	R/W-0	R/W-0
	IPTMR<31:24>							
23:16	R/W-0	R/W-0	R/W-0	R/W-0	R/W-0	R/W-0	R/W-0	R/W-0
	IPTMR<23:16>							
15:8	R/W-0	R/W-0	R/W-0	R/W-0	R/W-0	R/W-0	R/W-0	R/W-0
	IPTMR<15:8>							
7:0	R/W-0	R/W-0	R/W-0	R/W-0	R/W-0	R/W-0	R/W-0	R/W-0
	IPTMR<7:0>							

Legend:			
R = Readable bit	W = Writable bit	U = Unimplemented bit, read as ‘0’	
-n = Value at POR	‘1’ = Bit is set	‘0’ = Bit is cleared	x = Bit is unknown

bit 31-0 **IPTMR<31:0>:** Interrupt Proximity Timer Reload bits
Used by the Interrupt Proximity Timer as a reload value when the Interrupt Proximity timer is triggered by an interrupt event.

REGISTER 5-4: IFSx: INTERRUPT FLAG STATUS REGISTER

Bit Range	Bit 31/23/15/7	Bit 30/22/14/6	Bit 29/21/13/5	Bit 28/20/12/4	Bit 27/19/11/3	Bit 26/18/10/2	Bit 25/17/9/1	Bit 24/16/8/0
31:24	R/W-0	R/W-0	R/W-0	R/W-0	R/W-0	R/W-0	R/W-0	R/W-0
	IFS31	IFS30	IFS29	IFS28	IFS27	IFS26	IFS25	IFS24
23:16	R/W-0	R/W-0	R/W-0	R/W-0	R/W-0	R/W-0	R/W-0	R/W-0
	IFS23	IFS22	IFS21	IFS20	IFS19	IFS18	IFS17	IFS16
15:8	R/W-0	R/W-0	R/W-0	R/W-0	R/W-0	R/W-0	R/W-0	R/W-0
	IFS15	IFS14	IFS13	IFS12	IFS11	IFS10	IFS9	IFS8
7:0	R/W-0	R/W-0	R/W-0	R/W-0	R/W-0	R/W-0	R/W-0	R/W-0
	IFS7	IFS6	IFS5	IFS4	IFS3	IFS2	IFS1	IFS0

Legend:			
R = Readable bit	W = Writable bit	U = Unimplemented bit, read as ‘0’	
-n = Value at POR	‘1’ = Bit is set	‘0’ = Bit is cleared	x = Bit is unknown

bit 31-0 **IFS31-IFS0:** Interrupt Flag Status bits
`1` = Interrupt request has occurred
`0` = No interrupt request has occurred

Note: This register represents a generic definition of the IFSx register. Refer to Table 5-1 for the exact bit definitions.

REGISTER 5-5: IECx: INTERRUPT ENABLE CONTROL REGISTER

Bit Range	Bit 31/23/15/7	Bit 30/22/14/6	Bit 29/21/13/5	Bit 28/20/12/4	Bit 27/19/11/3	Bit 26/18/10/2	Bit 25/17/9/1	Bit 24/16/8/0
31:24	R/W-0	R/W-0	R/W-0	R/W-0	R/W-0	R/W-0	R/W-0	R/W-0
	IEC31	IEC30	IEC29	IEC28	IEC27	IEC26	IEC25	IEC24
23:16	R/W-0	R/W-0	R/W-0	R/W-0	R/W-0	R/W-0	R/W-0	R/W-0
	IEC23	IEC22	IEC21	IEC20	IEC19	IEC18	IEC17	IEC16
15:8	R/W-0	R/W-0	R/W-0	R/W-0	R/W-0	R/W-0	R/W-0	R/W-0
	IEC15	IEC14	IEC13	IEC12	IEC11	IEC10	IEC9	IEC8
7:0	R/W-0	R/W-0	R/W-0	R/W-0	R/W-0	R/W-0	R/W-0	R/W-0
	IEC7	IEC6	IEC5	IEC4	IEC3	IEC2	IEC1	IEC0

Legend:			
R = Readable bit	W = Writable bit	U = Unimplemented bit, read as ‘0’	
-n = Value at POR	‘1’ = Bit is set	‘0’ = Bit is cleared	x = Bit is unknown

bit 31-0 **IEC31-IEC0:** Interrupt Enable bits
`1` = Interrupt is enabled
`0` = Interrupt is disabled

Note: This register represents a generic definition of the IECx register. Refer to Table 5-1 for the exact bit definitions.

© 2014-2019 Microchip Technology Inc.

REGISTER 5-6: IPCx: INTERRUPT PRIORITY CONTROL REGISTER

Bit Range	Bit 31/23/15/7	Bit 30/22/14/6	Bit 29/21/13/5	Bit 28/20/12/4	Bit 27/19/11/3	Bit 26/18/10/2	Bit 25/17/9/1	Bit 24/16/8/0
31:24	U-0	U-0	U-0	R/W-0	R/W-0	R/W-0	R/W-0	R/W-0
	—	—	—	IP3<2:0>			IS3<1:0>	
23:16	U-0	U-0	U-0	R/W-0	R/W-0	R/W-0	R/W-0	R/W-0
	—	—	—	IP2<2:0>			IS2<1:0>	
15:8	U-0	U-0	U-0	R/W-0	R/W-0	R/W-0	R/W-0	R/W-0
	—	—	—	IP1<2:0>			IS1<1:0>	
7:0	U-0	U-0	U-0	R/W-0	R/W-0	R/W-0	R/W-0	R/W-0
	—	—	—	IP0<2:0>			IS0<1:0>	

Legend:			
R = Readable bit	W = Writable bit	U = Unimplemented bit, read as ‘0’	
-n = Value at POR	‘1’ = Bit is set	‘0’ = Bit is cleared	x = Bit is unknown

bit 31-29 **Unimplemented:** Read as ‘0’

bit 28-26 **IP3<2:0>:** Interrupt Priority bits
111 = Interrupt priority is 7
•
•
•
010 = Interrupt priority is 2
001 = Interrupt priority is 1
000 = Interrupt is disabled

bit 25-24 **IS3<1:0>:** Interrupt Subpriority bits
11 = Interrupt subpriority is 3
10 = Interrupt subpriority is 2
01 = Interrupt subpriority is 1
00 = Interrupt subpriority is 0

bit 23-21 **Unimplemented:** Read as ‘0’

bit 20-18 **IP2<2:0>:** Interrupt Priority bits
111 = Interrupt priority is 7
•
•
•
010 = Interrupt priority is 2
001 = Interrupt priority is 1
000 = Interrupt is disabled

bit 17-16 **IS2<1:0>:** Interrupt Subpriority bits
11 = Interrupt subpriority is 3
10 = Interrupt subpriority is 2
01 = Interrupt subpriority is 1
00 = Interrupt subpriority is 0

bit 15-13 **Unimplemented:** Read as ‘0’

bit 12-10 **IP1<2:0>:** Interrupt Priority bits
111 = Interrupt priority is 7
•
•
•
010 = Interrupt priority is 2
001 = Interrupt priority is 1
000 = Interrupt is disabled

Note: This register represents a generic definition of the IPCx register. Refer to Table 5-1 for the exact bit definitions.

REGISTER 5-6: IPCx: INTERRUPT PRIORITY CONTROL REGISTER (CONTINUED)

bit 9-8 **IS1<1:0>:** Interrupt Subpriority bits
- 11 = Interrupt subpriority is 3
- 10 = Interrupt subpriority is 2
- 01 = Interrupt subpriority is 1
- 00 = Interrupt subpriority is 0

bit 7-5 **Unimplemented:** Read as '0'

bit 4-2 **IP0<2:0>:** Interrupt Priority bits
- 111 = Interrupt priority is 7
- .
- .
- .
- 010 = Interrupt priority is 2
- 001 = Interrupt priority is 1
- 000 = Interrupt is disabled

bit 1-0 **IS0<1:0>:** Interrupt Subpriority bits
- 11 = Interrupt subpriority is 3
- 10 = Interrupt subpriority is 2
- 01 = Interrupt subpriority is 1
- 00 = Interrupt subpriority is 0

Note: This register represents a generic definition of the IPCx register. Refer to Table 5-1 for the exact bit definitions.

© 2014-2019 Microchip Technology Inc.

6.0 FLASH PROGRAM MEMORY

Note: This data sheet summarizes the features of the PIC32MX1XX/2XX/5XX 64/100-pin family of devices. It is not intended to be a comprehensive reference source. To complement the information in this data sheet, refer to **Section 5. "Flash Program Memory"** (DS60001121) in the *"PIC32 Family Reference Manual"*, which is available from the Microchip web site (www.microchip.com/PIC32).

PIC32MX1XX/2XX/5XX 64/100-pin devices contain an internal Flash program memory for executing user code. There are three methods by which the user can program this memory:

- Run-Time Self-Programming (RTSP)
- EJTAG Programming
- In-Circuit Serial Programming™ (ICSP™)

RTSP is performed by software executing from either Flash or RAM memory. Information about RTSP techniques is available in **Section 5. "Flash Program Memory"** (DS60001121) in the *"PIC32 Family Reference Manual".*

EJTAG is performed using the EJTAG port of the device and an EJTAG capable programmer.

ICSP is performed using a serial data connection to the device and allows much faster programming times than RTSP.

The EJTAG and ICSP methods are described in the "*PIC32 Flash Programming Specification*" (DS60001145), which can be downloaded from the Microchip web site.

Note: On PIC32MX1XX/2XX/5XX 64/100-pin devices, the Flash page size is 1 KB and the row size is 128 bytes (256 IW and 32 IW, respectively).

6.1 Control Registers

TABLE 6-1: FLASH CONTROLLER REGISTER MAP

Virtual Address (BF80_#)	Register Name	Bit Range	Bits																All Resets
			31/15	30/14	29/13	28/12	27/11	26/10	25/9	24/8	23/7	22/6	21/5	20/4	19/3	18/2	17/1	16/0	
F400	NVMCON(1)	31:16	—	—	—	—	—	—	—	—	—	—	—	—	—	—	—	—	0000
		15:0	WR	WREN	WRERR	LVDERR	LVDSTAT	—	—	—	—	—	—	—	NVMOP<3:0>				0000
F410	NVMKEY	31:16	NVMKEY<31:0>																0000
		15:0																	0000
F420	NVMADDR(1)	31:16	NVMADDR<31:0>																0000
		15:0																	0000
F430	NVMDATA	31:16	NVMDATA<31:0>																0000
		15:0																	0000
F440	NVMSRC ADDR	31:16	NVMSRCADDR<31:0>																0000
		15:0																	0000

Legend: x = unknown value on Reset; — = unimplemented, read as ‘0’. Reset values are shown in hexadecimal.

Note 1: This register has corresponding CLR, SET and INV registers at their virtual addresses, plus offsets of 0x4, 0x8 and 0xC, respectively. See **Section 11.2 “CLR, SET, and INV Registers”** for more information.

© 2014-2019 Microchip Technology Inc.

REGISTER 6-1: NVMCON: PROGRAMMING CONTROL REGISTER

Bit Range	Bit 31/23/15/7	Bit 30/22/14/6	Bit 29/21/13/5	Bit 28/20/12/4	Bit 27/19/11/3	Bit 26/18/10/2	Bit 25/17/9/1	Bit 24/16/8/0
31:24	U-0	U-0	U-0	U-0	U-0	U-0	U-0	U-0
	—	—	—	—	—	—	—	—
23:16	U-0	U-0	U-0	U-0	U-0	U-0	U-0	U-0
	—	—	—	—	—	—	—	—
15:8	R/W-0	R/W-0	R-0	R-0	R-0	U-0	U-0	U-0
	WR	WREN(1)	WRERR(2)	LVDERR(2)	LVDSTAT(2)	—	—	—
7:0	U-0	U-0	U-0	U-0	R/W-0	R/W-0	R/W-0	R/W-0
	—	—	—	—	NVMOP<3:0>			

Legend:			
R = Readable bit	W = Writable bit	U = Unimplemented bit, read as ‘0’	
-n = Value at POR	‘1’ = Bit is set	‘0’ = Bit is cleared	x = Bit is unknown

bit 31-16 **Unimplemented:** Read as ‘0’

bit 15 **WR:** Write Control bit
This bit is writable when WREN = 1 and the unlock sequence is followed.
1 = Initiate a Flash operation. Hardware clears this bit when the operation completes
0 = Flash operation complete or inactive

bit 14 **WREN:** Write Enable bit(1)
1 = Enable writes to WR bit and enables LVD circuit
0 = Disable writes to WR bit and disables LVD circuit
This is the only bit in this register reset by a device Reset.

bit 13 **WRERR:** Write Error bit(2)
This bit is read-only and is automatically set by hardware.
1 = Program or erase sequence did not complete successfully
0 = Program or erase sequence completed normally

bit 12 **LVDERR:** Low-Voltage Detect Error bit (LVD circuit must be enabled)(2)
This bit is read-only and is automatically set by hardware.
1 = Low-voltage detected (possible data corruption, if WRERR is set)
0 = Voltage level is acceptable for programming

bit 11 **LVDSTAT:** Low-Voltage Detect Status bit (LVD circuit must be enabled)(2)
This bit is read-only and is automatically set, and cleared, by hardware.
1 = Low-voltage event active
0 = Low-voltage event NOT active

bit 10-4 **Unimplemented:** Read as ‘0’

bit 3-0 **NVMOP<3:0>:** NVM Operation bits
These bits are writable when WREN = 0.
1111 =Reserved
•
•
•
0111 = Reserved
0110 =No operation
0101 =Program Flash (PFM) erase operation: erases PFM, if all pages are not write-protected
0100 =Page erase operation: erases page selected by NVMADDR, if it is not write-protected
0011 =Row program operation: programs row selected by NVMADDR, if it is not write-protected
0010 =No operation
0001 =Word program operation: programs word selected by NVMADDR, if it is not write-protected
0000 = No operation

Note 1: This bit is cleared by any reset (i.e., POR, BOR, WDT, $\overline{\text{MCLR}}$, SWR).

2: This bit is only cleared by setting NVMOP = 0000, and initiating a Flash WR operation or a POR. Any other kind of reset (i.e., BOR, WDT, $\overline{\text{MCLR}}$) does not clear this bit.

REGISTER 6-2: NVMKEY: PROGRAMMING UNLOCK REGISTER

Bit Range	Bit 31/23/15/7	Bit 30/22/14/6	Bit 29/21/13/5	Bit 28/20/12/4	Bit 27/19/11/3	Bit 26/18/10/2	Bit 25/17/9/1	Bit 24/16/8/0
31:24	W-0	W-0	W-0	W-0	W-0	W-0	W-0	W-0
	NVMKEY<31:24>							
23:16	W-0	W-0	W-0	W-0	W-0	W-0	W-0	W-0
	NVMKEY<23:16>							
15:8	W-0	W-0	W-0	W-0	W-0	W-0	W-0	W-0
	NVMKEY<15:8>							
7:0	W-0	W-0	W-0	W-0	W-0	W-0	W-0	W-0
	NVMKEY<7:0>							

Legend:			
R = Readable bit	W = Writable bit	U = Unimplemented bit, read as ‘0’	
-n = Value at POR	‘1’ = Bit is set	‘0’ = Bit is cleared	x = Bit is unknown

bit 31-0 **NVMKEY<31:0>:** Unlock Register bits
These bits are write-only, and read as ‘0’ on any read.

Note: This register is used as part of the unlock sequence to prevent inadvertent writes to the PFM.

REGISTER 6-3: NVMADDR: FLASH ADDRESS REGISTER

Bit Range	Bit 31/23/15/7	Bit 30/22/14/6	Bit 29/21/13/5	Bit 28/20/12/4	Bit 27/19/11/3	Bit 26/18/10/2	Bit 25/17/9/1	Bit 24/16/8/0
31:24	R/W-0	R/W-0	R/W-0	R/W-0	R/W-0	R/W-0	R/W-0	R/W-0
	NVMADDR<31:24>							
23:16	R/W-0	R/W-0	R/W-0	R/W-0	R/W-0	R/W-0	R/W-0	R/W-0
	NVMADDR<23:16>							
15:8	R/W-0	R/W-0	R/W-0	R/W-0	R/W-0	R/W-0	R/W-0	R/W-0
	NVMADDR<15:8>							
7:0	R/W-0	R/W-0	R/W-0	R/W-0	R/W-0	R/W-0	R/W-0	R/W-0
	NVMADDR<7:0>							

Legend:			
R = Readable bit	W = Writable bit	U = Unimplemented bit, read as ‘0’	
-n = Value at POR	‘1’ = Bit is set	‘0’ = Bit is cleared	x = Bit is unknown

bit 31-0 **NVMADDR<31:0>:** Flash Address bits
Bulk/Chip/PFM Erase: Address is ignored
Page Erase: Address identifies the page to erase
Row Program: Address identifies the row to program
Word Program: Address identifies the word to program

© 2014-2019 Microchip Technology Inc.

REGISTER 6-4: NVMDATA: FLASH PROGRAM DATA REGISTER

Bit Range	Bit 31/23/15/7	Bit 30/22/14/6	Bit 29/21/13/5	Bit 28/20/12/4	Bit 27/19/11/3	Bit 26/18/10/2	Bit 25/17/9/1	Bit 24/16/8/0
31:24	R/W-0	R/W-0	R/W-0	R/W-0	R/W-0	R/W-0	R/W-0	R/W-0
	NVMDATA<31:24>							
23:16	R/W-0	R/W-0	R/W-0	R/W-0	R/W-0	R/W-0	R/W-0	R/W-0
	NVMDATA<23:16>							
15:8	R/W-0	R/W-0	R/W-0	R/W-0	R/W-0	R/W-0	R/W-0	R/W-0
	NVMDATA<15:8>							
7:0	R/W-0	R/W-0	R/W-0	R/W-0	R/W-0	R/W-0	R/W-0	R/W-0
	NVMDATA<7:0>							

Legend:			
R = Readable bit	W = Writable bit	U = Unimplemented bit, read as ‘0’	
-n = Value at POR	‘1’ = Bit is set	‘0’ = Bit is cleared	x = Bit is unknown

bit 31-0 **NVMDATA<31:0>:** Flash Programming Data bits

Note: The bits in this register are only reset by a Power-on Reset (POR).

REGISTER 6-5: NVMSRCADDR: SOURCE DATA ADDRESS REGISTER

Bit Range	Bit 31/23/15/7	Bit 30/22/14/6	Bit 29/21/13/5	Bit 28/20/12/4	Bit 27/19/11/3	Bit 26/18/10/2	Bit 25/17/9/1	Bit 24/16/8/0
31:24	R/W-0	R/W-0	R/W-0	R/W-0	R/W-0	R/W-0	R/W-0	R/W-0
	NVMSRCADDR<31:24>							
23:16	R/W-0	R/W-0	R/W-0	R/W-0	R/W-0	R/W-0	R/W-0	R/W-0
	NVMSRCADDR<23:16>							
15:8	R/W-0	R/W-0	R/W-0	R/W-0	R/W-0	R/W-0	R/W-0	R/W-0
	NVMSRCADDR<15:8>							
7:0	R/W-0	R/W-0	R/W-0	R/W-0	R/W-0	R/W-0	R/W-0	R/W-0
	NVMSRCADDR<7:0>							

Legend:			
R = Readable bit	W = Writable bit	U = Unimplemented bit, read as ‘0’	
-n = Value at POR	‘1’ = Bit is set	‘0’ = Bit is cleared	x = Bit is unknown

bit 31-0 **NVMSRCADDR<31:0>:** Source Data Address bits
The system physical address of the data to be programmed into the Flash when the NVMOP<3:0> bits (NVMCON<3:0>) are set to perform row programming.

NOTES:

© 2014-2019 Microchip Technology Inc.

7.0 RESETS

Note: This data sheet summarizes the features of the PIC32MX1XX/2XX/5XX 64/100-pin family of devices. It is not intended to be a comprehensive reference source. To complement the information in this data sheet, refer to **Section 7. "Resets"** (DS60001118) in the *"PIC32 Family Reference Manual"*, which is available from the Microchip web site (www.microchip.com/PIC32).

The Reset module combines all Reset sources and controls the device Master Reset signal, SYSRST. The following is a list of device Reset sources:

- POR: Power-on Reset
- $\overline{\text{MCLR}}$: Master Clear Reset pin
- SWR: Software Reset
- WDTR: Watchdog Timer Reset
- BOR: Brown-out Reset
- CMR: Configuration Mismatch Reset
- HVDR: High Voltage Detect Reset

A simplified block diagram of the Reset module is illustrated in Figure 7-1.

FIGURE 7-1: SYSTEM RESET BLOCK DIAGRAM

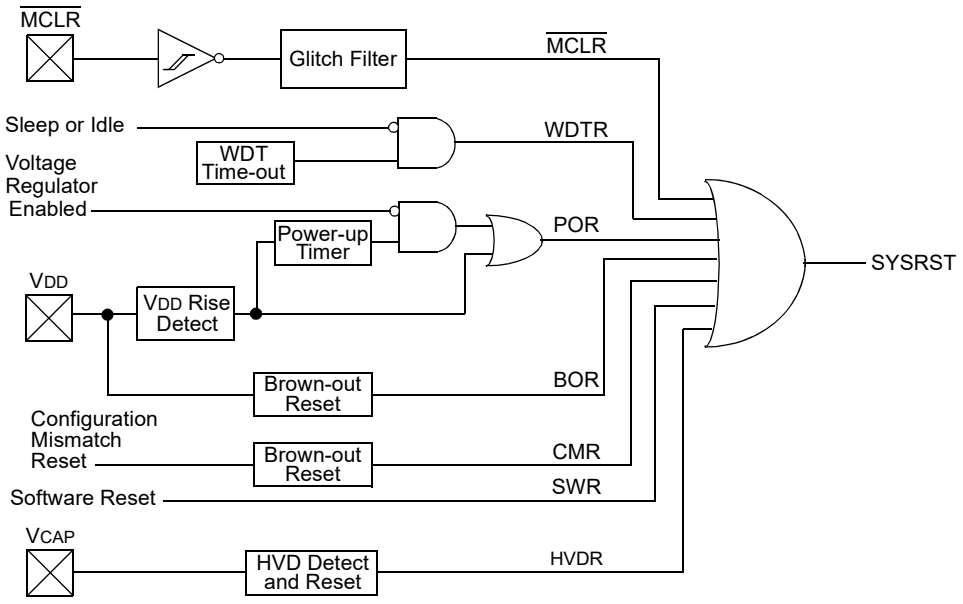

7.1 Control Registers

TABLE 7-1: RESET SFR SUMMARY

Virtual Address (BF80_#)	Register Name(1)	Bit Range	Bits																All Resets
			31/15	30/14	29/13	28/12	27/11	26/10	25/9	24/8	23/7	22/6	21/5	20/4	19/3	18/2	17/1	16/0	
F600	RCON	31:16	—	—	HVDR	—	—	—	—	—	—	—	—	—	—	—	—	—	0000
		15:0	—	—	—	—	—	—	CMR	VREGS	EXTR	SWR	—	WDTO	SLEEP	IDLE	BOR	POR	xxxx(1)
F610	RSWRST	31:16	—	—	—	—	—	—	—	—	—	—	—	—	—	—	—	—	0000
		15:0	—	—	—	—	—	—	—	—	—	—	—	—	—	—	—	SWRST	0000

Legend: — = unimplemented, read as '0'. Address offset values are shown in hexadecimal.

Note 1: The Reset value is dependent on the DEVCFGx Configuration bits and the type of reset.

© 2014-2019 Microchip Technology Inc.

REGISTER 7-1: RCON: RESET CONTROL REGISTER

Bit Range	Bit 31/23/15/7	Bit 30/22/14/6	Bit 29/21/13/5	Bit 28/20/12/4	Bit 27/19/11/3	Bit 26/18/10/2	Bit 25/17/9/1	Bit 24/16/8/0
31:24	U-0	U-0	R/W-0, HS	U-0	U-0	U-0	U-0	U-0
	—	—	HVDR	—	—	—	—	—
23:16	U-0	U-0	U-0	U-0	U-0	U-0	U-0	U-0
	—	—	—	—	—	—	—	—
15:8	U-0	U-0	U-0	U-0	U-0	U-0	R/W-0, HS	R/W-0
	—	—	—	—	—	—	CMR	VREGS
7:0	R/W-0, HS	R/W-0, HS	U-0	R/W-0, HS	R/W-0, HS	R/W-0, HS	R/W-1, HS	R/W-1, HS
	EXTR	SWR	—	WDTO	SLEEP	IDLE	BOR(1)	POR(1)

Legend:	HS = Set by hardware		
R = Readable bit	W = Writable bit	U = Unimplemented bit, read as ‘0’	
-n = Value at POR	‘1’ = Bit is set	‘0’ = Bit is cleared	x = Bit is unknown

bit 31-30 **Unimplemented:** Read as ‘0’

bit 29 **HVDR:** High Voltage Detect Reset Flag bit
1 = High Voltage Detect (HVD) Reset has occurred, voltage on V_{CAP} > 2.5V
0 = HVD Reset has not occurred

bit 28-10 **Unimplemented:** Read as ‘0’

bit 9 **CMR:** Configuration Mismatch Reset Flag bit
1 = Configuration mismatch Reset has occurred
0 = Configuration mismatch Reset has not occurred

bit 8 **VREGS:** Voltage Regulator Standby Enable bit
1 = Regulator is enabled and is on during Sleep mode
0 = Regulator is set to standby tracking mode

bit 7 **EXTR:** External Reset ($\overline{MCLR}$) Pin Flag bit
1 = Master Clear (pin) Reset has occurred
0 = Master Clear (pin) Reset has not occurred

bit 6 **SWR:** Software Reset Flag bit
1 = Software Reset was executed
0 = Software Reset as not executed

bit 5 **Unimplemented:** Read as ‘0’

bit 4 **WDTO:** Watchdog Timer Time-out Flag bit
1 = WDT Time-out has occurred
0 = WDT Time-out has not occurred

bit 3 **SLEEP:** Wake From Sleep Flag bit
1 = Device was in Sleep mode
0 = Device was not in Sleep mode

bit 2 **IDLE:** Wake From Idle Flag bit
1 = Device was in Idle mode
0 = Device was not in Idle mode

bit 1 **BOR:** Brown-out Reset Flag bit(1)
1 = Brown-out Reset has occurred
0 = Brown-out Reset has not occurred

bit 0 **POR:** Power-on Reset Flag bit(1)
1 = Power-on Reset has occurred
0 = Power-on Reset has not occurred

Note 1: User software must clear this bit to view next detection.

REGISTER 7-2: RSWRST: SOFTWARE RESET REGISTER

Bit Range	Bit 31/23/15/7	Bit 30/22/14/6	Bit 29/21/13/5	Bit 28/20/12/4	Bit 27/19/11/3	Bit 26/18/10/2	Bit 25/17/9/1	Bit 24/16/8/0
31:24	U-0	U-0	U-0	U-0	U-0	U-0	U-0	U-0
	—	—	—	—	—	—	—	—
23:16	U-0	U-0	U-0	U-0	U-0	U-0	U-0	U-0
	—	—	—	—	—	—	—	—
15:8	U-0	U-0	U-0	U-0	U-0	U-0	U-0	U-0
	—	—	—	—	—	—	—	—
7:0	U-0	U-0	U-0	U-0	U-0	U-0	U-0	W-0, HC
	—	—	—	—	—	—	—	SWRST(1)

Legend:	HC = Cleared by hardware		
R = Readable bit	W = Writable bit	U = Unimplemented bit, read as ‘0’	
-n = Value at POR	‘1’ = Bit is set	‘0’ = Bit is cleared	x = Bit is unknown

bit 31-1 **Unimplemented:** Read as ‘0’

bit 0 **SWRST:** Software Reset Trigger bit(1)
1 = Enable software Reset event
0 = No effect

Note 1: The system unlock sequence must be performed before the SWRST bit can be written. Refer to **Section 6. “Oscillator”** (DS60001112) in the *“PIC32 Family Reference Manual”* for details.

© 2014-2019 Microchip Technology Inc.

8.0 OSCILLATOR CONFIGURATION

Note: This data sheet summarizes the features of the PIC32MX1XX/2XX/5XX 64/100-pin family of devices. It is not intended to be a comprehensive reference source. To complement the information in this data sheet, refer to **Section 6. "Oscillator Configuration"** (DS60001112) in the *"PIC32 Family Reference Manual"*, which is available from the Microchip web site (www.microchip.com/PIC32).

The PIC32MX1XX/2XX/5XX 64/100-pin oscillator system has the following modules and features:

- A Total of four external and internal oscillator options as clock sources
- On-Chip PLL with user-selectable input divider, multiplier and output divider to boost operating frequency on select internal and external oscillator sources
- On-Chip user-selectable divisor postscaler on select oscillator sources
- Software-controllable switching between various clock sources
- A Fail-Safe Clock Monitor (FSCM) that detects clock failure and permits safe application recovery or shutdown
- Dedicated On-Chip PLL for USB peripheral

A block diagram of the oscillator system is provided in Figure 8-1.

FIGURE 8-1: PIC32MX1XX/2XX/5XX 64/100-PIN FAMILY CLOCK DIAGRAM

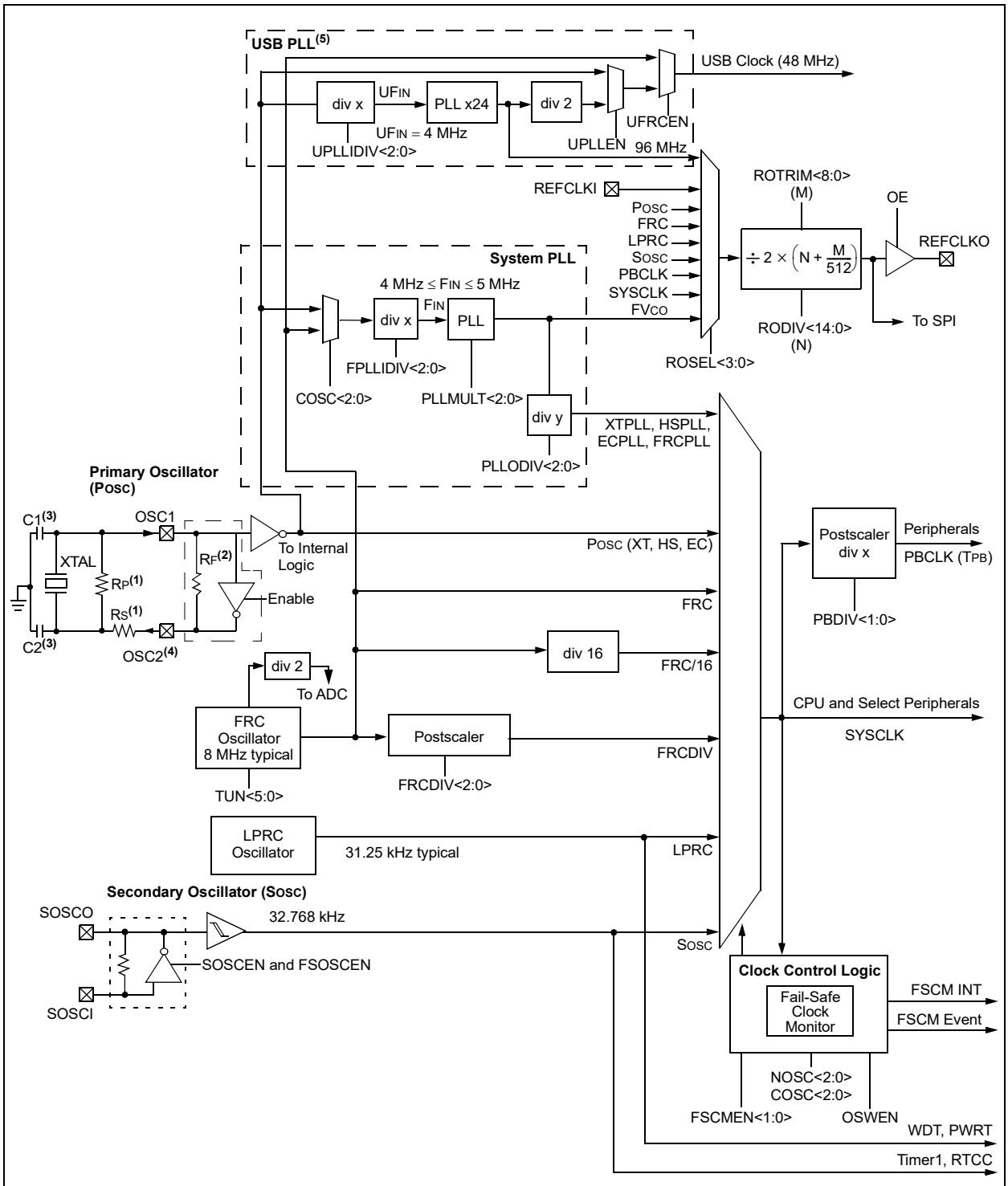

Notes: 1. A series resistor, R_S, may be required for AT strip cut crystals or eliminate clipping. Alternately, to increase oscillator circuit gain, add a parallel resistor, R_P, with a value of 1 MΩ.

2. The internal feedback resistor, R_F, is typically in the range of 2 MΩ to 10 MΩ.

3. Refer to **Section 6. "Oscillator Configuration"** (DS60001112) in the "*PIC32 Family Reference Manual*" for determining the best oscillator components.

4. PBCLK out is available on the OSC2 pin in certain clock modes.

5. USB PLL is available on PIC32MX2XX/5XX devices only.

© 2014-2019 Microchip Technology Inc.

FIGURE 8-2: PIC32MX1XX/2XX/5XX PLL BLOCK DIAGRAM

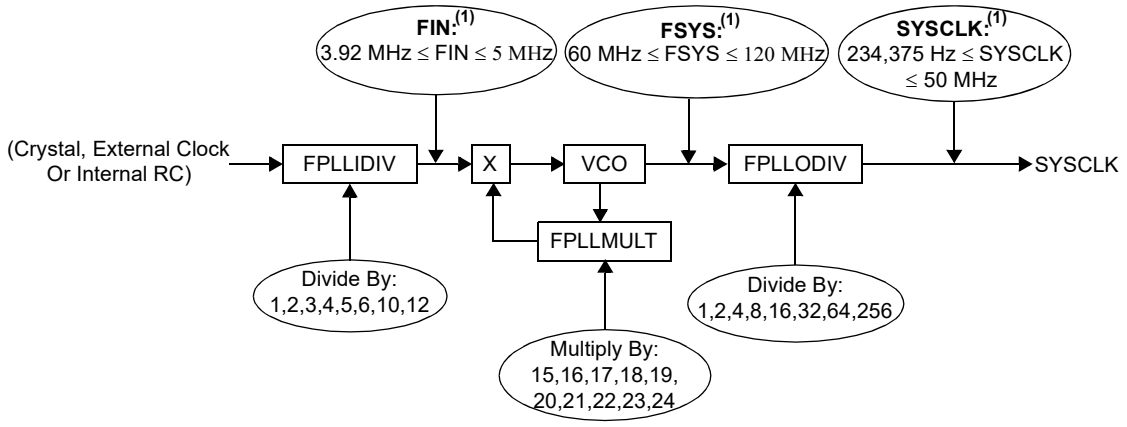

Note 1: This frequency range must be satisfied at all times if the PLL is enabled and software is updating the corresponding bits in the OSCON register.

8.1 Control Registers

TABLE 8-1: OSCILLATOR CONFIGURATION REGISTER MAP

Virtual Address (BF80_#)	Register Name[1]	Bit Range	Bits 31/15	30/14	29/13	28/12	27/11	26/10	25/9	24/8	23/7	22/6	21/5	20/4	19/3	18/2	17/1	16/0	All Resets
F000	OSCCON	31:16	—	—	PLLODIV<2:0>			FRCDIV<2:0>			—	SOSCRDY	PBDIVRDY	PBDIV<1:0>		PLLMULT<2:0>			x1xx[2]
		15:0	—	COSC<2:0>			—	NOSC<2:0>			CLKLOCK	ULOCK	SLOCK	SLPEN	CF	UFRCEN[3]	SOSCEN	OSWEN	xxxx[2]
F010	OSCTUN	31:16	—	—	—	—	—	—	—	—	—	—	—	—	—	—	—	—	0000
		15:0	—	—	—	—	—	—	—	—	—	—	TUN<5:0>						0000
F020	REFOCON	31:16	—	RODIV<14:0>															0000
		15:0	ON	—	SIDL	OE	RSLP	—	DIVSWEN	ACTIVE	—	—	—	—	ROSEL<3:0>				0000
F030	REFOTRIM	31:16	ROTRIM<8:0>									—	—	—	—	—	—	—	0000
		15:0	—	—	—	—	—	—	—	—	—	—	—	—	—	—	—	—	0000

Legend: x = unknown value on Reset; — = unimplemented, read as '0'. Reset values are shown in hexadecimal.

Note 1: With the exception of those noted, all registers in this table have corresponding CLR, SET and INV registers at their virtual addresses, plus offsets of 0x4, 0x8 and 0xC, respectively. See **Section 11.2 "CLR, SET, and INV Registers"** for more information.

2: Reset values are dependent on the DEVCFGx Configuration bits and the type of reset.

3: This bit is only available on devices with a USB module.

© 2014-2019 Microchip Technology Inc.

REGISTER 8-1: OSCCON: OSCILLATOR CONTROL REGISTER

Bit Range	Bit 31/23/15/7	Bit 30/22/14/6	Bit 29/21/13/5	Bit 28/20/12/4	Bit 27/19/11/3	Bit 26/18/10/2	Bit 25/17/9/1	Bit 24/16/8/0
31:24	U-0	U-0	R/W-y	R/W-y	R/W-y	R/W-0	R/W-0	R/W-1
	—	—	PLLODIV<2:0>			FRCDIV<2:0>		
23:16	U-0	R-0	R-1	R/W-y	R/W-y	R/W-y	R/W-y	R/W-y
	—	SOSCRDY	PBDIVRDY	PBDIV<1:0>		PLLMULT<2:0>		
15:8	U-0	R-0	R-0	R-0	U-0	R/W-y	R/W-y	R/W-y
	—	COSC<2:0>			—	NOSC<2:0>		
7:0	R/W-0	R-0	R-0	R/W-0	R/W-0	R/W-0	R/W-y	R/W-0
	CLKLOCK	ULOCK(1)	SLOCK	SLPEN	CF	UFRCEN(1)	SOSCEN	OSWEN

Legend:	y = Value set from Configuration bits on POR		
R = Readable bit	W = Writable bit	U = Unimplemented bit, read as ‘0’	
-n = Value at POR	‘1’ = Bit is set	‘0’ = Bit is cleared	x = Bit is unknown

bit 31-30 **Unimplemented:** Read as ‘0’

bit 29-27 **PLLODIV<2:0>:** Output Divider for PLL
- 111 = PLL output divided by 256
- 110 = PLL output divided by 64
- 101 = PLL output divided by 32
- 100 = PLL output divided by 16
- 011 = PLL output divided by 8
- 010 = PLL output divided by 4
- 001 = PLL output divided by 2
- 000 = PLL output divided by 1

bit 26-24 **FRCDIV<2:0>:** Internal Fast RC (FRC) Oscillator Clock Divider bits
- 111 = FRC divided by 256
- 110 = FRC divided by 64
- 101 = FRC divided by 32
- 100 = FRC divided by 16
- 011 = FRC divided by 8
- 010 = FRC divided by 4
- 001 = FRC divided by 2 (default setting)
- 000 = FRC divided by 1

bit 23 **Unimplemented:** Read as ‘0’

bit 22 **SOSCRDY:** Secondary Oscillator (SOSC) Ready Indicator bit
- 1 = Indicates that the Secondary Oscillator is running and is stable
- 0 = Secondary Oscillator is still warming up or is turned off

bit 21 **PBDIVRDY:** Peripheral Bus Clock (PBCLK) Divisor Ready bit
- 1 = PBDIV<1:0> bits can be written
- 0 = PBDIV<1:0> bits cannot be written

bit 20-19 **PBDIV<1:0>:** Peripheral Bus Clock (PBCLK) Divisor bits
- 11 = PBCLK is SYSCLK divided by 8 (default)
- 10 = PBCLK is SYSCLK divided by 4
- 01 = PBCLK is SYSCLK divided by 2
- 00 = PBCLK is SYSCLK divided by 1

Note 1: This bit is available on PIC32MX2XX/5XX devices only.

Note: Writes to this register require an unlock sequence. Refer to **Section 6. “Oscillator”** (DS60001112) in the *“PIC32 Family Reference Manual”* for details.

REGISTER 8-1: OSCCON: OSCILLATOR CONTROL REGISTER (CONTINUED)

bit 18-16 **PLLMULT<2:0>:** Phase-Locked Loop (PLL) Multiplier bits

111 = Clock is multiplied by 24
110 = Clock is multiplied by 21
101 = Clock is multiplied by 20
100 = Clock is multiplied by 19
011 = Clock is multiplied by 18
010 = Clock is multiplied by 17
001 = Clock is multiplied by 16
000 = Clock is multiplied by 15

bit 15 **Unimplemented:** Read as '0'

bit 14-12 **COSC<2:0>:** Current Oscillator Selection bits

111 = Internal Fast RC (FRC) Oscillator divided by OSCCON<FRCDIV> bits
110 = Internal Fast RC (FRC) Oscillator divided by 16
101 = Internal Low-Power RC (LPRC) Oscillator
100 = Secondary Oscillator (SOSC)
011 = Primary Oscillator (POSC) with PLL module (XTPLL, HSPLL or ECPLL)
010 = Primary Oscillator (POSC) (XT, HS or EC)
001 = Internal Fast RC Oscillator with PLL module via Postscaler (FRCPLL)
000 = Internal Fast RC (FRC) Oscillator

bit 11 **Unimplemented:** Read as '0'

bit 10-8 **NOSC<2:0>:** New Oscillator Selection bits

111 = Internal Fast RC Oscillator (FRC) divided by OSCCON<FRCDIV> bits
110 = Internal Fast RC Oscillator (FRC) divided by 16
101 = Internal Low-Power RC (LPRC) Oscillator
100 = Secondary Oscillator (SOSC)
011 = Primary Oscillator with PLL module (XTPLL, HSPLL or ECPLL)
010 = Primary Oscillator (XT, HS or EC)
001 = Internal Fast Internal RC Oscillator with PLL module via Postscaler (FRCPLL)
000 = Internal Fast Internal RC Oscillator (FRC)

On Reset, these bits are set to the value of the FNOSC Configuration bits (DEVCFG1<2:0>).

bit 7 **CLKLOCK:** Clock Selection Lock Enable bit

If clock switching and monitoring is disabled (FCKSM<1:0> = 1x):
1 = Clock and PLL selections are locked
0 = Clock and PLL selections are not locked and may be modified

If clock switching and monitoring is enabled (FCKSM<1:0> = 0x):
Clock and PLL selections are never locked and may be modified.

bit 6 **ULOCK:** USB PLL Lock Status bit(1)

1 = Indicates that the USB PLL module is in lock or USB PLL module start-up timer is satisfied
0 = Indicates that the USB PLL module is out of lock or USB PLL module start-up timer is in progress or USB PLL is disabled

bit 5 **SLOCK:** PLL Lock Status bit

1 = PLL module is in lock or PLL module start-up timer is satisfied
0 = PLL module is out of lock, PLL start-up timer is running or PLL is disabled

bit 4 **SLPEN:** Sleep Mode Enable bit

1 = Device will enter Sleep mode when a WAIT instruction is executed
0 = Device will enter Idle mode when a WAIT instruction is executed

bit 3 **CF:** Clock Fail Detect bit

1 = FSCM has detected a clock failure
0 = No clock failure has been detected

Note 1: This bit is available on PIC32MX2XX/5XX devices only.

Note: Writes to this register require an unlock sequence. Refer to **Section 6. "Oscillator"** (DS60001112) in the *"PIC32 Family Reference Manual"* for details.

© 2014-2019 Microchip Technology Inc.

REGISTER 8-1: OSCCON: OSCILLATOR CONTROL REGISTER (CONTINUED)

bit 2 **UFRCEN:** USB FRC Clock Enable bit[(1)]
- 1 = Enable FRC as the clock source for the USB clock source
- 0 = Use the Primary Oscillator or USB PLL as the USB clock source

bit 1 **SOSCEN:** Secondary Oscillator (SOSC) Enable bit
- 1 = Enable Secondary Oscillator
- 0 = Disable Secondary Oscillator

bit 0 **OSWEN:** Oscillator Switch Enable bit
- 1 = Initiate an oscillator switch to selection specified by NOSC<2:0> bits
- 0 = Oscillator switch is complete

Note 1: This bit is available on PIC32MX2XX/5XX devices only.

Note: Writes to this register require an unlock sequence. Refer to **Section 6. "Oscillator"** (DS60001112) in the *"PIC32 Family Reference Manual"* for details.

REGISTER 8-2: OSCTUN: FRC TUNING REGISTER

Bit Range	Bit 31/23/15/7	Bit 30/22/14/6	Bit 29/21/13/5	Bit 28/20/12/4	Bit 27/19/11/3	Bit 26/18/10/2	Bit 25/17/9/1	Bit 24/16/8/0
31:24	U-0	U-0	U-0	U-0	U-0	U-0	U-0	U-0
	—	—	—	—	—	—	—	—
23:16	U-0	R-0	U-0	U-0	U-0	U-0	U-0	U-0
	—	—	—	—	—	—	—	—
15:8	U-0	R-0	U-0	U-0	U-0	U-0	U-0	U-0
	—	—	—	—	—	—	—	—
7:0	U-0	U-0	R/W-0	R/W-0	R/W-0	R/W-0	R/W-0	R/W-0
	—	—	TUN<5:0>(1)					

Legend:	y = Value set from Configuration bits on POR		
R = Readable bit	W = Writable bit	U = Unimplemented bit, read as ‘0’	
-n = Value at POR	‘1’ = Bit is set	‘0’ = Bit is cleared	x = Bit is unknown

bit 31-6 **Unimplemented:** Read as ‘0’

bit 5-0 **TUN<5:0>:** FRC Oscillator Tuning bits(1)

100000 = Center frequency -1.5%
100001 =
•
•
•
111111 =
000000 = Center frequency. Oscillator runs at minimal frequency (8 MHz)
000001 =
•
•
•
011110 =
011111 = Center frequency +1.5%

Note 1: OSCTUN functionality has been provided to help customers compensate for temperature effects on the FRC frequency over a wide range of temperatures. The tuning step size is an approximation, and is neither characterized, nor tested.

Note: Writes to this register require an unlock sequence. Refer to **Section 6. “Oscillator”** (DS60001112) in the *“PIC32 Family Reference Manual”* for details.

© 2014-2019 Microchip Technology Inc.

REGISTER 8-3: REFOCON: REFERENCE OSCILLATOR CONTROL REGISTER

Bit Range	Bit 31/23/15/7	Bit 30/22/14/6	Bit 29/21/13/5	Bit 28/20/12/4	Bit 27/19/11/3	Bit 26/18/10/2	Bit 25/17/9/1	Bit 24/16/8/0
31:24	U-0	R/W-0	R/W-0	R/W-0	R/W-0	R/W-0	R/W-0	R/W-0
	—	RODIV<14:8>(1)						
23:16	R/W-0	R/W-0	R/W-0	R/W-0	R/W-0	R/W-0	R/W-0	R/W-0
	RODIV<7:0>(3)							
15:8	R/W-0	U-0	R/W-0	R/W-0	R/W-0	U-0	R/W-0, HC	R-0, HS, HC
	ON	—	SIDL	OE	RSLP(2)	—	DIVSWEN	ACTIVE
7:0	U-0	U-0	U-0	U-0	R/W-0	R/W-0	R/W-0	R/W-0
	—	—	—	—	ROSEL<3:0>(1)			

Legend:	HC = Hardware Clearable	HS = Hardware Settable	
R = Readable bit	W = Writable bit	U = Unimplemented bit, read as ‘0’	
-n = Value at POR	‘1’ = Bit is set	‘0’ = Bit is cleared	x = Bit is unknown

bit 31 **Unimplemented:** Read as ‘0’

bit 30-16 **RODIV<14:0>:** Reference Clock Divider bits(1)
This value selects the Reference Clock Divider bits. See Figure 8-1 for more information.

bit 15 **ON:** Output Enable bit
1 = Reference Oscillator Module enabled
0 = Reference Oscillator Module disabled

bit 14 **Unimplemented:** Read as ‘0’

bit 13 **SIDL:** Peripheral Stop in Idle Mode bit
1 = Discontinue module operation when device enters Idle mode
0 = Continue module operation in Idle mode

bit 12 **OE:** Reference Clock Output Enable bit
1 = Reference clock is driven out on REFCLKO pin
0 = Reference clock is not driven out on REFCLKO pin

bit 11 **RSLP:** Reference Oscillator Module Run in Sleep bit(2)
1 = Reference Oscillator Module output continues to run in Sleep
0 = Reference Oscillator Module output is disabled in Sleep

bit 10 **Unimplemented:** Read as ‘0’

bit 9 **DIVSWEN:** Divider Switch Enable bit
1 = Divider switch is in progress
0 = Divider switch is complete

bit 8 **ACTIVE:** Reference Clock Request Status bit
1 = Reference clock request is active
0 = Reference clock request is not active

bit 7-4 **Unimplemented:** Read as ‘0’

Note 1: The ROSEL and RODIV bits should not be written while the ACTIVE bit is ‘1’, as undefined behavior may result.

2: This bit is ignored when the ROSEL<3:0> bits = 0000 or 0001.

3: While the ON bit is set to ‘1’, writes to these bits do not take effect until the DIVSWEN bit is also set to ‘1’.

REGISTER 8-3: REFOCON: REFERENCE OSCILLATOR CONTROL REGISTER (CONTINUED)

bit 3-0 **ROSEL<3:0>:** Reference Clock Source Select bits(1)

1111 = Reserved; do not use
•
•
•
1001 = Reserved; do not use
1000 = REFCLKI
0111 = System PLL output
0110 = USB PLL output
0101 = SOSC
0100 = LPRC
0011 = FRC
0010 = POSC
0001 = PBCLK
0000 = SYSCLK

Note 1: The ROSEL and RODIV bits should not be written while the ACTIVE bit is '1', as undefined behavior may result.

2: This bit is ignored when the ROSEL<3:0> bits = 0000 or 0001.

3: While the ON bit is set to '1', writes to these bits do not take effect until the DIVSWEN bit is also set to '1'.

© 2014-2019 Microchip Technology Inc.

REGISTER 8-4: REFOTRIM: REFERENCE OSCILLATOR TRIM REGISTER

Bit Range	Bit 31/23/15/7	Bit 30/22/14/6	Bit 29/21/13/5	Bit 28/20/12/4	Bit 27/19/11/3	Bit 26/18/10/2	Bit 25/17/9/1	Bit 24/16/8/0
31:24	R/W-0	R/W-0	R/W-0	R/W-0	R/W-0	R/W-0	R/W-0	R/W-0
	ROTRIM<8:1>							
23:16	R/W-0	U-0	U-0	U-0	U-0	U-0	U-0	U-0
	ROTRIM<0>	—	—	—	—	—	—	—
15:8	U-0	U-0	U-0	U-0	U-0	U-0	U-0	U-0
	—	—	—	—	—	—	—	—
7:0	U-0	U-0	U-0	U-0	U-0	U-0	U-0	U-0
	—	—	—	—	—	—	—	—

Legend:	y = Value set from Configuration bits on POR		
R = Readable bit	W = Writable bit	U = Unimplemented bit, read as ‘0’	
-n = Value at POR	‘1’ = Bit is set	‘0’ = Bit is cleared	x = Bit is unknown

bit 31-23 **ROTRIM<8:0>:** Reference Oscillator Trim bits

`111111111` = 511/512 divisor added to RODIV value
`111111110` = 510/512 divisor added to RODIV value
•
•
•
`100000000` = 256/512 divisor added to RODIV value
•
•
•
`000000010` = 2/512 divisor added to RODIV value
`000000001` = 1/512 divisor added to RODIV value
`000000000` = 0/512 divisor added to RODIV value

bit 22-0 **Unimplemented:** Read as ‘0’

Note: While the ON bit (REFOCON<15>) is ‘1’, writes to this register do not take effect until the DIVSWEN bit is also set to ‘1’.

NOTES:

© 2014-2019 Microchip Technology Inc.

9.0 DIRECT MEMORY ACCESS (DMA) CONTROLLER

Note: This data sheet summarizes the features of the PIC32MX1XX/2XX/5XX 64/100-pin family of devices. It is not intended to be a comprehensive reference source. To complement the information in this data sheet, refer to **Section 31. "Direct Memory Access (DMA) Controller"** (DS60001117) in the *"PIC32 Family Reference Manual"*, which is available from the Microchip web site (www.microchip.com/PIC32).

The PIC32 Direct Memory Access (DMA) controller is a bus master module useful for data transfers between different devices without CPU intervention. The source and destination of a DMA transfer can be any of the memory mapped modules existent in the PIC32 (such as Peripheral Bus (PBUS) devices: SPI, UART, PMP, etc.) or memory itself.

The following are some of the key features of the DMA controller module:

- Four identical channels, each featuring:
  - Auto-increment source and destination address registers
  - Source and destination pointers
  - Memory to memory and memory to peripheral transfers
- Automatic word-size detection:
  - Transfer granularity, down to byte level
  - Bytes need not be word-aligned at source and destination
- Fixed priority channel arbitration
- Flexible DMA channel operating modes:
  - Manual (software) or automatic (interrupt) DMA requests
  - One-Shot or Auto-Repeat Block Transfer modes
  - Channel-to-channel chaining
- Flexible DMA requests:
  - A DMA request can be selected from any of the peripheral interrupt sources
  - Each channel can select any (appropriate) observable interrupt as its DMA request source
  - A DMA transfer abort can be selected from any of the peripheral interrupt sources
  - Pattern (data) match transfer termination
- Multiple DMA channel status interrupts:
  - DMA channel block transfer complete
  - Source empty or half empty
  - Destination full or half full
  - DMA transfer aborted due to an external event
  - Invalid DMA address generated
- DMA debug support features:
  - Most recent address accessed by a DMA channel
  - Most recent DMA channel to transfer data
- CRC Generation module:
  - CRC module can be assigned to any of the available channels
  - CRC module is highly configurable

FIGURE 9-1: DMA BLOCK DIAGRAM

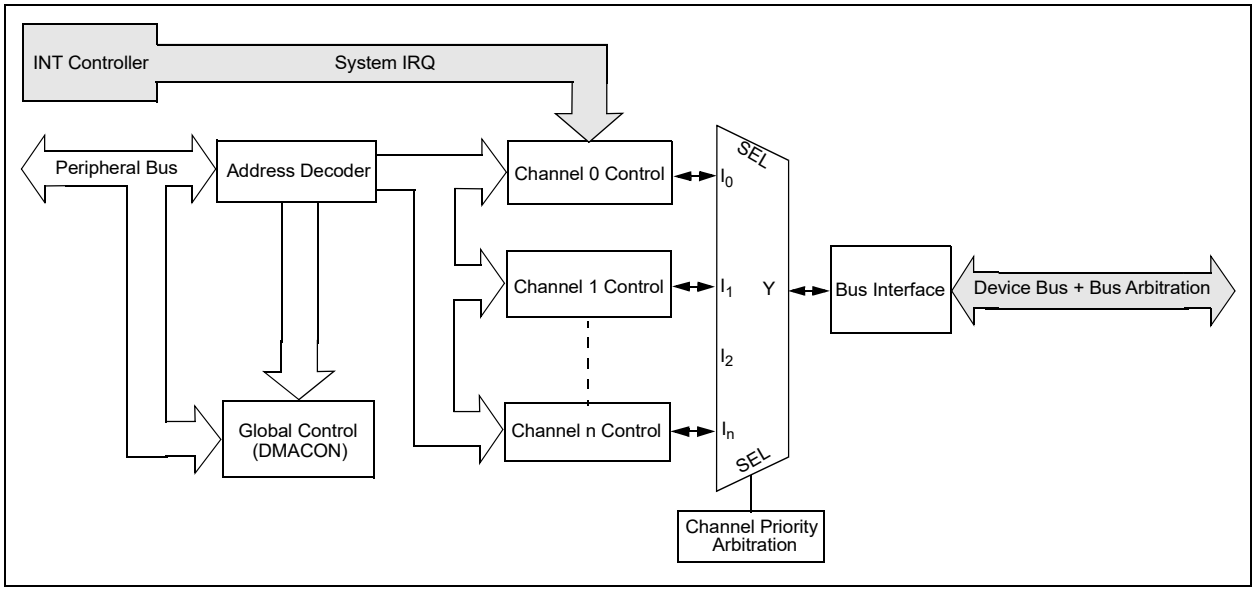

9.1 Control Registers

TABLE 9-1: DMA GLOBAL REGISTER MAP

Virtual Address (BF88_#)	Register Name(1)	Bit Range	Bits 31/15	30/14	29/13	28/12	27/11	26/10	25/9	24/8	23/7	22/6	21/5	20/4	19/3	18/2	17/1	16/0	All Resets
3000	DMACON	31:16	—	—	—	—	—	—	—	—	—	—	—	—	—	—	—	—	0000
		15:0	ON	—	—	SUSPEND	DMABUSY	—	—	—	—	—	—	—	—	—	—	—	0000
3010	DMASTAT	31:16	—	—	—	—	—	—	—	—	—	—	—	—	—	—	—	—	0000
		15:0	—	—	—	—	—	—	—	—	—	—	—	—	RDWR	DMACH<2:0>			0000
3020	DMAADDR	31:16	DMAADDR<31:0>																0000
		15:0																	0000

Legend: x = unknown value on Reset; — = unimplemented, read as '0'. Reset values are shown in hexadecimal.

Note 1: All registers in this table have corresponding CLR, SET and INV registers at its virtual address, plus an offset of 0x4, 0x8 and 0xC, respectively. See **Section 11.2 "CLR, SET, and INV Registers"** for more information.

TABLE 9-2: DMA CRC REGISTER MAP

Virtual Address (BF88_#)	Register Name(1)	Bit Range	Bits 31/15	30/14	29/13	28/12	27/11	26/10	25/9	24/8	23/7	22/6	21/5	20/4	19/3	18/2	17/1	16/0	All Resets
3030	DCRCCON	31:16	—	—	BYTO<1:0>		WBO	—	—	BITO	—	—	—	—	—	—	—	—	0000
		15:0	—	—	—	PLEN<4:0>					CRCEN	CRCAPP	CRCTYP	—	—	CRCCH<2:0>			0000
3040	DCRCDATA	31:16	DCRCDATA<31:0>																0000
		15:0																	0000
3050	DCRCXOR	31:16	DCRCXOR<31:0>																0000
		15:0																	0000

Legend: x = unknown value on Reset; — = unimplemented, read as '0'. Reset values are shown in hexadecimal.

Note 1: All registers in this table have corresponding CLR, SET and INV registers at their virtual addresses, plus offsets of 0x4, 0x8 and 0xC, respectively. See **Section 11.2 "CLR, SET, and INV Registers"** for more information.

© 2014-2019 Microchip Technology Inc.

TABLE 9-3: DMA CHANNEL 0 THROUGH CHANNEL 3 REGISTER MAP

Virtual Address (BF88_#)	Register Name(1)	Bit Range	Bits 31/15	30/14	29/13	28/12	27/11	26/10	25/9	24/8	23/7	22/6	21/5	20/4	19/3	18/2	17/1	16/0	All Resets
3060	DCH0CON	31:16	—	—	—	—	—	—	—	—	—	—	—	—	—	—	—	—	0000
		15:0	CHBUSY	—	—	—	—	—	—	CHCHNS	CHEN	CHAED	CHCHN	CHAEN	—	CHEDET	CHPRI<1:0>		0000
3070	DCH0ECON	31:16	—	—	—	—	—	—	—	—	CHAIRQ<7:0>								00FF
		15:0	CHSIRQ<7:0>								CFORCE	CABORT	PATEN	SIRQEN	AIRQEN	—	—	—	FFF8
3080	DCH0INT	31:16	—	—	—	—	—	—	—	—	CHSDIE	CHSHIE	CHDDIE	CHDHIE	CHBCIE	CHCCIE	CHTAIE	CHERIE	0000
		15:0	—	—	—	—	—	—	—	—	CHSDIF	CHSHIF	CHDDIF	CHDHIF	CHBCIF	CHCCIF	CHTAIF	CHERIF	0000
3090	DCH0SSA	31:16	CHSSA<31:0>																0000
		15:0																	0000
30A0	DCH0DSA	31:16	CHDSA<31:0>																0000
		15:0																	0000
30B0	DCH0SSIZ	31:16	—	—	—	—	—	—	—	—	—	—	—	—	—	—	—	—	0000
		15:0	CHSSIZ<15:0>																0000
30C0	DCH0DSIZ	31:16	—	—	—	—	—	—	—	—	—	—	—	—	—	—	—	—	0000
		15:0	CHDSIZ<15:0>																0000
30D0	DCH0SPTR	31:16	—	—	—	—	—	—	—	—	—	—	—	—	—	—	—	—	0000
		15:0	CHSPTR<15:0>																0000
30E0	DCH0DPTR	31:16	—	—	—	—	—	—	—	—	—	—	—	—	—	—	—	—	0000
		15:0	CHDPTR<15:0>																0000
30F0	DCH0CSIZ	31:16	—	—	—	—	—	—	—	—	—	—	—	—	—	—	—	—	0000
		15:0	CHCSIZ<15:0>																0000
3100	DCH0CPTR	31:16	—	—	—	—	—	—	—	—	—	—	—	—	—	—	—	—	0000
		15:0	CHCPTR<15:0>																0000
3110	DCH0DAT	31:16	—	—	—	—	—	—	—	—	—	—	—	—	—	—	—	—	0000
		15:0	—	—	—	—	—	—	—	—	CHPDAT<7:0>								0000
3120	DCH1CON	31:16	—	—	—	—	—	—	—	—	—	—	—	—	—	—	—	—	0000
		15:0	CHBUSY	—	—	—	—	—	—	CHCHNS	CHEN	CHAED	CHCHN	CHAEN	—	CHEDET	CHPRI<1:0>		0000
3130	DCH1ECON	31:16	—	—	—	—	—	—	—	—	CHAIRQ<7:0>								00FF
		15:0	CHSIRQ<7:0>								CFORCE	CABORT	PATEN	SIRQEN	AIRQEN	—	—	—	FFF8
3140	DCH1INT	31:16	—	—	—	—	—	—	—	—	CHSDIE	CHSHIE	CHDDIE	CHDHIE	CHBCIE	CHCCIE	CHTAIE	CHERIE	0000
		15:0	—	—	—	—	—	—	—	—	CHSDIF	CHSHIF	CHDDIF	CHDHIF	CHBCIF	CHCCIF	CHTAIF	CHERIF	0000
3150	DCH1SSA	31:16	CHSSA<31:0>																0000
		15:0																	0000
3160	DCH1DSA	31:16	CHDSA<31:0>																0000
		15:0																	0000

Legend: x = unknown value on Reset; — = unimplemented, read as ‘0’. Reset values are shown in hexadecimal.

Note 1: All registers in this table have corresponding CLR, SET and INV registers at their virtual addresses, plus offsets of 0x4, 0x8 and 0xC, respectively. See **Section 11.2 “CLR, SET, and INV Registers”** for more information.

© 2014-2019 Microchip Technology Inc.

TABLE 9-3: DMA CHANNEL 0 THROUGH CHANNEL 3 REGISTER MAP (CONTINUED)

Virtual Address (BF88_#)	Register Name(1)	Bit Range	Bits 31/15	30/14	29/13	28/12	27/11	26/10	25/9	24/8	23/7	22/6	21/5	20/4	19/3	18/2	17/1	16/0	All Resets
3170	DCH1SSIZ	31:16	—	—	—	—	—	—	—	—	—	—	—	—	—	—	—	—	0000
		15:0	CHSSIZ<15:0>																0000
3180	DCH1DSIZ	31:16	—	—	—	—	—	—	—	—	—	—	—	—	—	—	—	—	0000
		15:0	CHDSIZ<15:0>																0000
3190	DCH1SPTR	31:16	—	—	—	—	—	—	—	—	—	—	—	—	—	—	—	—	0000
		15:0	CHSPTR<15:0>																0000
31A0	DCH1DPTR	31:16	—	—	—	—	—	—	—	—	—	—	—	—	—	—	—	—	0000
		15:0	CHDPTR<15:0>																0000
31B0	DCH1CSIZ	31:16	—	—	—	—	—	—	—	—	—	—	—	—	—	—	—	—	0000
		15:0	CHCSIZ<15:0>																0000
31C0	DCH1CPTR	31:16	—	—	—	—	—	—	—	—	—	—	—	—	—	—	—	—	0000
		15:0	CHCPTR<15:0>																0000
31D0	DCH1DAT	31:16	—	—	—	—	—	—	—	—	—	—	—	—	—	—	—	—	0000
		15:0	—	—	—	—	—	—	—	—	CHPDAT<7:0>								0000
31E0	DCH2CON	31:16	—	—	—	—	—	—	—	—	—	—	—	—	—	—	—	—	0000
		15:0	CHBUSY	—	—	—	—	—	—	CHCHNS	CHEN	CHAED	CHCHN	CHAEN	—	CHEDET	CHPRI<1:0>		0000
31F0	DCH2ECON	31:16	—	—	—	—	—	—	—	—	CHAIRQ<7:0>								00FF
		15:0	CHSIRQ<7:0>								CFORCE	CABORT	PATEN	SIRQEN	AIRQEN	—	—	—	FFF8
3200	DCH2INT	31:16	—	—	—	—	—	—	—	—	CHSDIE	CHSHIE	CHDDIE	CHDHIE	CHBCIE	CHCCIE	CHTAIE	CHERIE	0000
		15:0	—	—	—	—	—	—	—	—	CHSDIF	CHSHIF	CHDDIF	CHDHIF	CHBCIF	CHCCIF	CHTAIF	CHERIF	0000
3210	DCH2SSA	31:16	CHSSA<31:0>																0000
		15:0																	0000
3220	DCH2DSA	31:16	CHDSA<31:0>																0000
		15:0																	0000
3230	DCH2SSIZ	31:16	—	—	—	—	—	—	—	—	—	—	—	—	—	—	—	—	0000
		15:0	CHSSIZ<15:0>																0000
3240	DCH2DSIZ	31:16	—	—	—	—	—	—	—	—	—	—	—	—	—	—	—	—	0000
		15:0	CHDSIZ<15:0>																0000
3250	DCH2SPTR	31:16	—	—	—	—	—	—	—	—	—	—	—	—	—	—	—	—	0000
		15:0	CHSPTR<15:0>																0000
3260	DCH2DPTR	31:16	—	—	—	—	—	—	—	—	—	—	—	—	—	—	—	—	0000
		15:0	CHDPTR<15:0>																0000
3270	DCH2CSIZ	31:16	—	—	—	—	—	—	—	—	—	—	—	—	—	—	—	—	0000
		15:0	CHCSIZ<15:0>																0000

Legend: x = unknown value on Reset; — = unimplemented, read as '0'. Reset values are shown in hexadecimal.

Note 1: All registers in this table have corresponding CLR, SET and INV registers at their virtual addresses, plus offsets of 0x4, 0x8 and 0xC, respectively. See **Section 11.2 "CLR, SET, and INV Registers"** for more information.

© 2014-2019 Microchip Technology Inc.

TABLE 9-3: DMA CHANNEL 0 THROUGH CHANNEL 3 REGISTER MAP (CONTINUED)

Virtual Address (BF88_#)	Register Name(1)	Bit Range	Bits 31/15	30/14	29/13	28/12	27/11	26/10	25/9	24/8	23/7	22/6	21/5	20/4	19/3	18/2	17/1	16/0	All Resets
3280	DCH2CPTR	31:16	—	—	—	—	—	—	—	—	—	—	—	—	—	—	—	—	0000
		15:0	CHCPTR<15:0>																0000
3290	DCH2DAT	31:16	—	—	—	—	—	—	—	—	—	—	—	—	—	—	—	—	0000
		15:0	—	—	—	—	—	—	—	—	CHPDAT<7:0>								0000
32A0	DCH3CON	31:16	—	—	—	—	—	—	—	—	—	—	—	—	—	—	—	—	0000
		15:0	CHBUSY	—	—	—	—	—	—	CHCHNS	CHEN	CHAED	CHCHN	CHAEN	—	CHEDET	CHPRI<1:0>		0000
32B0	DCH3ECON	31:16	—	—	—	—	—	—	—	—	CHAIRQ<7:0>								00FF
		15:0	CHSIRQ<7:0>								CFORCE	CABORT	PATEN	SIRQEN	AIRQEN	—	—	—	FFF8
32C0	DCH3INT	31:16	—	—	—	—	—	—	—	—	CHSDIE	CHSHIE	CHDDIE	CHDHIE	CHBCIE	CHCCIE	CHTAIE	CHERIE	0000
		15:0	—	—	—	—	—	—	—	—	CHSDIF	CHSHIF	CHDDIF	CHDHIF	CHBCIF	CHCCIF	CHTAIF	CHERIF	0000
32D0	DCH3SSA	31:16	CHSSA<31:0>																0000
		15:0																	0000
32E0	DCH3DSA	31:16	CHDSA<31:0>																0000
		15:0																	0000
32F0	DCH3SSIZ	31:16	—	—	—	—	—	—	—	—	—	—	—	—	—	—	—	—	0000
		15:0	CHSSIZ<15:0>																0000
3300	DCH3DSIZ	31:16	—	—	—	—	—	—	—	—	—	—	—	—	—	—	—	—	0000
		15:0	CHDSIZ<15:0>																0000
3310	DCH3SPTR	31:16	—	—	—	—	—	—	—	—	—	—	—	—	—	—	—	—	0000
		15:0	CHSPTR<15:0>																0000
3320	DCH3DPTR	31:16	—	—	—	—	—	—	—	—	—	—	—	—	—	—	—	—	0000
		15:0	CHDPTR<15:0>																0000
3330	DCH3CSIZ	31:16	—	—	—	—	—	—	—	—	—	—	—	—	—	—	—	—	0000
		15:0	CHCSIZ<15:0>																0000
3340	DCH3CPTR	31:16	—	—	—	—	—	—	—	—	—	—	—	—	—	—	—	—	0000
		15:0	CHCPTR<15:0>																0000
3350	DCH3DAT	31:16	—	—	—	—	—	—	—	—	—	—	—	—	—	—	—	—	0000
		15:0	—	—	—	—	—	—	—	—	CHPDAT<7:0>								0000

Legend: x = unknown value on Reset; — = unimplemented, read as '0'. Reset values are shown in hexadecimal.

Note 1: All registers in this table have corresponding CLR, SET and INV registers at their virtual addresses, plus offsets of 0x4, 0x8 and 0xC, respectively. See **Section 11.2 "CLR, SET, and INV Registers"** for more information.

© 2014-2019 Microchip Technology Inc.

REGISTER 9-1: DMACON: DMA CONTROLLER CONTROL REGISTER

Bit Range	Bit 31/23/15/7	Bit 30/22/14/6	Bit 29/21/13/5	Bit 28/20/12/4	Bit 27/19/11/3	Bit 26/18/10/2	Bit 25/17/9/1	Bit 24/16/8/0
31:24	U-0	U-0	U-0	U-0	U-0	U-0	U-0	U-0
	—	—	—	—	—	—	—	—
23:16	U-0	U-0	U-0	U-0	U-0	U-0	U-0	U-0
	—	—	—	—	—	—	—	—
15:8	R/W-0	U-0	U-0	R/W-0	R/W-0	U-0	U-0	U-0
	ON(1)	—	—	SUSPEND	DMABUSY(1)	—	—	—
7:0	U-0	U-0	U-0	U-0	U-0	U-0	U-0	U-0
	—	—	—	—	—	—	—	—

Legend:			
R = Readable bit	W = Writable bit	U = Unimplemented bit, read as ‘0’	
-n = Value at POR	‘1’ = Bit is set	‘0’ = Bit is cleared	x = Bit is unknown

bit 31-16 **Unimplemented:** Read as ‘0’

bit 15 **ON:** DMA On bit(1)
- 1 = DMA module is enabled
- 0 = DMA module is disabled

bit 14-13 **Unimplemented:** Read as ‘0’

bit 12 **SUSPEND:** DMA Suspend bit
- 1 = DMA transfers are suspended to allow CPU uninterrupted access to data bus
- 0 = DMA operates normally

bit 11 **DMABUSY:** DMA Module Busy bit(1)
- 1 = DMA module is active
- 0 = DMA module is disabled and not actively transferring data

bit 10-0 **Unimplemented:** Read as ‘0’

Note 1: When using 1:1 PBCLK divisor, the user’s software should not read/write the peripheral’s SFRs in the SYSCLK cycle immediately following the instruction that clears the module’s ON bit.

© 2014-2019 Microchip Technology Inc.

REGISTER 9-2: DMASTAT: DMA STATUS REGISTER

Bit Range	Bit 31/23/15/7	Bit 30/22/14/6	Bit 29/21/13/5	Bit 28/20/12/4	Bit 27/19/11/3	Bit 26/18/10/2	Bit 25/17/9/1	Bit 24/16/8/0
31:24	U-0	U-0	U-0	U-0	U-0	U-0	U-0	U-0
	—	—	—	—	—	—	—	—
23:16	U-0	U-0	U-0	U-0	U-0	U-0	U-0	U-0
	—	—	—	—	—	—	—	—
15:8	U-0	U-0	U-0	U-0	U-0	U-0	U-0	U-0
	—	—	—	—	—	—	—	—
7:0	U-0	U-0	U-0	U-0	R-0	R-0	R-0	R-0
	—	—	—	—	RDWR	DMACH<2:0>		

Legend:			
R = Readable bit	W = Writable bit	U = Unimplemented bit, read as ‘0’	
-n = Value at POR	‘1’ = Bit is set	‘0’ = Bit is cleared	x = Bit is unknown

bit 31-4 **Unimplemented:** Read as ‘0’

bit 3 **RDWR:** Read/Write Status bit

1 = Last DMA bus access was a read
0 = Last DMA bus access was a write

bit 2-0 **DMACH<2:0>:** DMA Channel bits

These bits contain the value of the most recent active DMA channel.

REGISTER 9-3: DMAADDR: DMA ADDRESS REGISTER

Bit Range	Bit 31/23/15/7	Bit 30/22/14/6	Bit 29/21/13/5	Bit 28/20/12/4	Bit 27/19/11/3	Bit 26/18/10/2	Bit 25/17/9/1	Bit 24/16/8/0
31:24	R-0	R-0	R-0	R-0	R-0	R-0	R-0	R-0
	DMAADDR<31:24>							
23:16	R-0	R-0	R-0	R-0	R-0	R-0	R-0	R-0
	DMAADDR<23:16>							
15:8	R-0	R-0	R-0	R-0	R-0	R-0	R-0	R-0
	DMAADDR<15:8>							
7:0	R-0	R-0	R-0	R-0	R-0	R-0	R-0	R-0
	DMAADDR<7:0>							

Legend:			
R = Readable bit	W = Writable bit	U = Unimplemented bit, read as ‘0’	
-n = Value at POR	‘1’ = Bit is set	‘0’ = Bit is cleared	x = Bit is unknown

bit 31-0 **DMAADDR<31:0>:** DMA Module Address bits

These bits contain the address of the most recent DMA access.

REGISTER 9-4: DCRCCON: DMA CRC CONTROL REGISTER

Bit Range	Bit 31/23/15/7	Bit 30/22/14/6	Bit 29/21/13/5	Bit 28/20/12/4	Bit 27/19/11/3	Bit 26/18/10/2	Bit 25/17/9/1	Bit 24/16/8/0
31:24	U-0	U-0	R/W-0	R/W-0	R/W-0	U-0	U-0	R/W-0
	—	—	BYTO<1:0>		WBO(1)	—	—	BITO
23:16	U-0	U-0	U-0	U-0	U-0	U-0	U-0	U-0
	—	—	—	—	—	—	—	—
15:8	U-0	U-0	U-0	R/W-0	R/W-0	R/W-0	R/W-0	R/W-0
	—	—	—	PLEN<4:0>				
7:0	R/W-0	R/W-0	R/W-0	U-0	U-0	R/W-0	R/W-0	R/W-0
	CRCEN	CRCAPP(1)	CRCTYP	—	—	CRCCH<2:0>		

Legend:			
R = Readable bit	W = Writable bit	U = Unimplemented bit, read as ‘0’	
-n = Value at POR	‘1’ = Bit is set	‘0’ = Bit is cleared	x = Bit is unknown

bit 31-30 **Unimplemented:** Read as ‘0’

bit 29-28 **BYTO<1:0>:** CRC Byte Order Selection bits
- 11 = Endian byte swap on half-word boundaries (i.e., source half-word order with reverse source byte order per half-word)
- 10 = Swap half-words on word boundaries (i.e., reverse source half-word order with source byte order per half-word)
- 01 = Endian byte swap on word boundaries (i.e., reverse source byte order)
- 00 = No swapping (i.e., source byte order)

bit 27 **WBO:** CRC Write Byte Order Selection bit(1)
- 1 = Source data is written to the destination re-ordered as defined by BYTO<1:0>
- 0 = Source data is written to the destination unaltered

bit 26-25 **Unimplemented:** Read as ‘0’

bit 24 **BITO:** CRC Bit Order Selection bit(1

When CRCTYP (DCRCCON<15>) = 1 (CRC module is in IP Header mode):
- 1 = The IP header checksum is calculated Least Significant bit (LSb) first (i.e., reflected)
- 0 = The IP header checksum is calculated Most Significant bit (MSb) first (i.e., not reflected)

When CRCTYP (DCRCCON<15>) = 0 (CRC module is in LFSR mode):
- 1 = The LFSR CRC is calculated Least Significant bit first (i.e., reflected)
- 0 = The LFSR CRC is calculated Most Significant bit first (i.e., not reflected)

bit 23-13 **Unimplemented:** Read as ‘0’

bit 12-8 **PLEN<4:0>:** Polynomial Length bits(1)

When CRCTYP (DCRCCON<15>) = 1 (CRC module is in IP Header mode):
These bits are unused.

When CRCTYP (DCRCCON<15>) = 0 (CRC module is in LFSR mode):
Denotes the length of the polynomial – 1.

bit 7 **CRCEN:** CRC Enable bit
- 1 = CRC module is enabled and channel transfers are routed through the CRC module
- 0 = CRC module is disabled and channel transfers proceed normally

Note 1: When WBO = 1, unaligned transfers are not supported and the CRCAPP bit cannot be set.

© 2014-2019 Microchip Technology Inc.

REGISTER 9-4: DCRCCON: DMA CRC CONTROL REGISTER (CONTINUED)

bit 6 **CRCAPP:** CRC Append Mode bit(1)
- 1 = The DMA transfers data from the source into the CRC but NOT to the destination. When a block transfer completes the DMA writes the calculated CRC value to the location given by CHxDSA
- 0 = The DMA transfers data from the source through the CRC obeying WBO as it writes the data to the destination

bit 5 **CRCTYP:** CRC Type Selection bit
- 1 = The CRC module will calculate an IP header checksum
- 0 = The CRC module will calculate a LFSR CRC

bit 4-3 **Unimplemented:** Read as '0'

bit 2-0 **CRCCH<2:0>:** CRC Channel Select bits
- 111 = CRC is assigned to Channel 7
- 110 = CRC is assigned to Channel 6
- 101 = CRC is assigned to Channel 5
- 100 = CRC is assigned to Channel 4
- 011 = CRC is assigned to Channel 3
- 010 = CRC is assigned to Channel 2
- 001 = CRC is assigned to Channel 1
- 000 = CRC is assigned to Channel 0

Note 1: When WBO = 1, unaligned transfers are not supported and the CRCAPP bit cannot be set.

REGISTER 9-5: DCRCDATA: DMA CRC DATA REGISTER

Bit Range	Bit 31/23/15/7	Bit 30/22/14/6	Bit 29/21/13/5	Bit 28/20/12/4	Bit 27/19/11/3	Bit 26/18/10/2	Bit 25/17/9/1	Bit 24/16/8/0
31:24	R/W-0	R/W-0	R/W-0	R/W-0	R/W-0	R/W-0	R/W-0	R/W-0
	DCRCDATA<31:24>							
23:16	R/W-0	R/W-0	R/W-0	R/W-0	R/W-0	R/W-0	R/W-0	R/W-0
	DCRCDATA<23:16>							
15:8	R/W-0	R/W-0	R/W-0	R/W-0	R/W-0	R/W-0	R/W-0	R/W-0
	DCRCDATA<15:8>							
7:0	R/W-0	R/W-0	R/W-0	R/W-0	R/W-0	R/W-0	R/W-0	R/W-0
	DCRCDATA<7:0>							

Legend:			
R = Readable bit	W = Writable bit	U = Unimplemented bit, read as ‘0’	
-n = Value at POR	‘1’ = Bit is set	‘0’ = Bit is cleared	x = Bit is unknown

bit 31-0 **DCRCDATA<31:0>:** CRC Data Register bits

Writing to this register will seed the CRC generator. Reading from this register will return the current value of the CRC. Bits greater than PLEN will return ‘0’ on any read.

When CRCTYP (DCRCCON<15>) = 1 (CRC module is in IP Header mode):
Only the lower 16 bits contain IP header checksum information. The upper 16 bits are always ‘0’. Data written to this register is converted and read back in 1’s complement form (i.e., current IP header checksum value).

When CRCTYP (DCRCCON<15>) = 0 (CRC module is in LFSR mode):
Bits greater than PLEN will return ‘0’ on any read.

REGISTER 9-6: DCRCXOR: DMA CRCXOR ENABLE REGISTER

Bit Range	Bit 31/23/15/7	Bit 30/22/14/6	Bit 29/21/13/5	Bit 28/20/12/4	Bit 27/19/11/3	Bit 26/18/10/2	Bit 25/17/9/1	Bit 24/16/8/0
31:24	R/W-0	R/W-0	R/W-0	R/W-0	R/W-0	R/W-0	R/W-0	R/W-0
	DCRCXOR<31:24>							
23:16	R/W-0	R/W-0	R/W-0	R/W-0	R/W-0	R/W-0	R/W-0	R/W-0
	DCRCXOR<23:16>							
15:8	R/W-0	R/W-0	R/W-0	R/W-0	R/W-0	R/W-0	R/W-0	R/W-0
	DCRCXOR<15:8>							
7:0	R/W-0	R/W-0	R/W-0	R/W-0	R/W-0	R/W-0	R/W-0	R/W-0
	DCRCXOR<7:0>							

Legend:			
R = Readable bit	W = Writable bit	U = Unimplemented bit, read as ‘0’	
-n = Value at POR	‘1’ = Bit is set	‘0’ = Bit is cleared	x = Bit is unknown

bit 31-0 **DCRCXOR<31:0>:** CRC XOR Register bits

When CRCTYP (DCRCCON<15>) = 1 (CRC module is in IP Header mode):
This register is unused.

When CRCTYP (DCRCCON<15>) = 0 (CRC module is in LFSR mode):
1 = Enable the XOR input to the Shift register
0 = Disable the XOR input to the Shift register; data is shifted in directly from the previous stage in the register

© 2014-2019 Microchip Technology Inc.

REGISTER 9-7: DCHxCON: DMA CHANNEL 'x' CONTROL REGISTER

Bit Range	Bit 31/23/15/7	Bit 30/22/14/6	Bit 29/21/13/5	Bit 28/20/12/4	Bit 27/19/11/3	Bit 26/18/10/2	Bit 25/17/9/1	Bit 24/16/8/0
31:24	U-0	U-0	U-0	U-0	U-0	U-0	U-0	U-0
	—	—	—	—	—	—	—	—
23:16	U-0	U-0	U-0	U-0	U-0	U-0	U-0	U-0
	—	—	—	—	—	—	—	—
15:8	R/W-0	U-0	U-0	U-0	U-0	U-0	U-0	R/W-0
	CHBUSY	—	—	—	—	—	—	CHCHNS(1)
7:0	R/W-0	R/W-0	R/W-0	R/W-0	U-0	R-0	R/W-0	R/W-0
	CHEN(2)	CHAED	CHCHN	CHAEN	—	CHEDET	CHPRI<1:0>	

Legend:			
R = Readable bit	W = Writable bit	U = Unimplemented bit, read as '0'	
-n = Value at POR	'1' = Bit is set	'0' = Bit is cleared	x = Bit is unknown

bit 31-16 **Unimplemented:** Read as '0'

bit 15 **CHBUSY:** Channel Busy bit
1 = Channel is active or has been enabled
0 = Channel is inactive or has been disabled

bit 14-9 **Unimplemented:** Read as '0'

bit 8 **CHCHNS:** Chain Channel Selection bit(1)
1 = Chain to channel lower in natural priority (CH1 will be enabled by CH2 transfer complete)
0 = Chain to channel higher in natural priority (CH1 will be enabled by CH0 transfer complete)

bit 7 **CHEN:** Channel Enable bit(2)
1 = Channel is enabled
0 = Channel is disabled

bit 6 **CHAED:** Channel Allow Events If Disabled bit
1 = Channel start/abort events will be registered, even if the channel is disabled
0 = Channel start/abort events will be ignored if the channel is disabled

bit **CHCHN:** Channel Chain Enable bit
1 = Allow channel to be chained
0 = Do not allow channel to be chained

bit 4 **CHAEN:** Channel Automatic Enable bit
1 = Channel is continuously enabled, and not automatically disabled after a block transfer is complete
0 = Channel is disabled on block transfer complete

bit 3 **Unimplemented:** Read as '0'

bit 2 **CHEDET:** Channel Event Detected bit
1 = An event has been detected
0 = No events have been detected

bit 1-0 **CHPRI<1:0>:** Channel Priority bits
11 = Channel has priority 3 (highest)
10 = Channel has priority 2
01 = Channel has priority 1
00 = Channel has priority 0

Note 1: The chain selection bit takes effect when chaining is enabled (i.e., CHCHN = 1).

2: When the channel is suspended by clearing this bit, the user application should poll the CHBUSY bit (if available on the device variant) to see when the channel is suspended, as it may take some clock cycles to complete a current transaction before the channel is suspended.

REGISTER 9-8: DCHxECON: DMA CHANNEL 'x' EVENT CONTROL REGISTER

Bit Range	Bit 31/23/15/7	Bit 30/22/14/6	Bit 29/21/13/5	Bit 28/20/12/4	Bit 27/19/11/3	Bit 26/18/10/2	Bit 25/17/9/1	Bit 24/16/8/0
31:24	U-0	U-0	U-0	U-0	U-0	U-0	U-0	U-0
	—	—	—	—	—	—	—	—
23:16	R/W-1	R/W-1	R/W-1	R/W-1	R/W-1	R/W-1	R/W-1	R/W-1
	CHAIRQ<7:0>(1)							
15:8	R/W-1	R/W-1	R/W-1	R/W-1	R/W-1	R/W-1	R/W-1	R/W-1
	CHSIRQ<7:0>(1)							
7:0	S-0	S-0	R/W-0	R/W-0	R/W-0	U-0	U-0	U-0
	CFORCE	CABORT	PATEN	SIRQEN	AIRQEN	—	—	—

Legend:	S = Settable bit		
R = Readable bit	W = Writable bit	U = Unimplemented bit, read as '0'	
-n = Value at POR	'1' = Bit is set	'0' = Bit is cleared	x = Bit is unknown

bit 31-24 **Unimplemented:** Read as '0'

bit 23-16 **CHAIRQ<7:0>:** Channel Transfer Abort IRQ bits(1)

11111111 = Interrupt 255 will abort any transfers in progress and set CHAIF flag

•

•

•

00000001 = Interrupt 1 will abort any transfers in progress and set CHAIF flag

00000000 = Interrupt 0 will abort any transfers in progress and set CHAIF flag

bit 15-8 **CHSIRQ<7:0>:** Channel Transfer Start IRQ bits(1)

11111111 = Interrupt 255 will initiate a DMA transfer

•

•

•

00000001 = Interrupt 1 will initiate a DMA transfer

00000000 = Interrupt 0 will initiate a DMA transfer

bit 7 **CFORCE:** DMA Forced Transfer bit

1 = A DMA transfer is forced to begin when this bit is written to a '1'

0 = This bit always reads '0'

bit 6 **CABORT:** DMA Abort Transfer bit

1 = A DMA transfer is aborted when this bit is written to a '1'

0 = This bit always reads '0'

bit 5 **PATEN:** Channel Pattern Match Abort Enable bit

1 = Abort transfer and clear CHEN on pattern match

0 = Pattern match is disabled

bit 4 **SIRQEN:** Channel Start IRQ Enable bit

1 = Start channel cell transfer if an interrupt matching CHSIRQ occurs

0 = Interrupt number CHSIRQ is ignored and does not start a transfer

bit 3 **AIRQEN:** Channel Abort IRQ Enable bit

1 = Channel transfer is aborted if an interrupt matching CHAIRQ occurs

0 = Interrupt number CHAIRQ is ignored and does not terminate a transfer

bit 2-0 **Unimplemented:** Read as '0'

Note 1: See **Table 5-1: "Interrupt IRQ, Vector and Bit Location"** for the list of available interrupt IRQ sources.

© 2014-2019 Microchip Technology Inc.

REGISTER 9-9: DCHxINT: DMA CHANNEL 'x' INTERRUPT CONTROL REGISTER

Bit Range	Bit 31/23/15/7	Bit 30/22/14/6	Bit 29/21/13/5	Bit 28/20/12/4	Bit 27/19/11/3	Bit 26/18/10/2	Bit 25/17/9/1	Bit 24/16/8/0
31:24	U-0	U-0	U-0	U-0	U-0	U-0	U-0	U-0
	—	—	—	—	—	—	—	—
23:16	R/W-0	R/W-0	R/W-0	R/W-0	R/W-0	R/W-0	R/W-0	R/W-0
	CHSDIE	CHSHIE	CHDDIE	CHDHIE	CHBCIE	CHCCIE	CHTAIE	CHERIE
15:8	U-0	U-0	U-0	U-0	U-0	U-0	U-0	U-0
	—	—	—	—	—	—	—	—
7:0	R/W-0	R/W-0	R/W-0	R/W-0	R/W-0	R/W-0	R/W-0	R/W-0
	CHSDIF	CHSHIF	CHDDIF	CHDHIF	CHBCIF	CHCCIF	CHTAIF	CHERIF

Legend:			
R = Readable bit	W = Writable bit	U = Unimplemented bit, read as '0'	
-n = Value at POR	'1' = Bit is set	'0' = Bit is cleared	x = Bit is unknown

bit 31-24 **Unimplemented:** Read as '0'

bit 23 **CHSDIE:** Channel Source Done Interrupt Enable bit
1 = Interrupt is enabled
0 = Interrupt is disabled

bit 22 **CHSHIE:** Channel Source Half Empty Interrupt Enable bit
1 = Interrupt is enabled
0 = Interrupt is disabled

bit 21 **CHDDIE:** Channel Destination Done Interrupt Enable bit
1 = Interrupt is enabled
0 = Interrupt is disabled

bit 20 **CHDHIE:** Channel Destination Half Full Interrupt Enable bit
1 = Interrupt is enabled
0 = Interrupt is disabled

bit 19 **CHBCIE:** Channel Block Transfer Complete Interrupt Enable bit
1 = Interrupt is enabled
0 = Interrupt is disabled

bit 18 **CHCCIE:** Channel Cell Transfer Complete Interrupt Enable bit
1 = Interrupt is enabled
0 = Interrupt is disabled

bit 17 **CHTAIE:** Channel Transfer Abort Interrupt Enable bit
1 = Interrupt is enabled
0 = Interrupt is disabled

bit 16 **CHERIE:** Channel Address Error Interrupt Enable bit
1 = Interrupt is enabled
0 = Interrupt is disabled

bit 15-8 **Unimplemented:** Read as '0'

bit 7 **CHSDIF:** Channel Source Done Interrupt Flag bit
1 = Channel Source Pointer has reached end of source (CHSPTR = CHSSIZ)
0 = No interrupt is pending

bit 6 **CHSHIF:** Channel Source Half Empty Interrupt Flag bit
1 = Channel Source Pointer has reached midpoint of source (CHSPTR = CHSSIZ/2)
0 = No interrupt is pending

bit 5 **CHDDIF:** Channel Destination Done Interrupt Flag bit
1 = Channel Destination Pointer has reached end of destination (CHDPTR = CHDSIZ)
0 = No interrupt is pending

REGISTER 9-9: DCHxINT: DMA CHANNEL 'x' INTERRUPT CONTROL REGISTER (CONTINUED)

bit 4 **CHDHIF:** Channel Destination Half Full Interrupt Flag bit
- 1 = Channel Destination Pointer has reached midpoint of destination (CHDPTR = CHDSIZ/2)
- 0 = No interrupt is pending

bit 3 **CHBCIF:** Channel Block Transfer Complete Interrupt Flag bit
- 1 = A block transfer has been completed (the larger of CHSSIZ/CHDSIZ bytes has been transferred), or a pattern match event occurs
- 0 = No interrupt is pending

bit 2 **CHCCIF:** Channel Cell Transfer Complete Interrupt Flag bit
- 1 = A cell transfer has been completed (CHCSIZ bytes have been transferred)
- 0 = No interrupt is pending

bit 1 **CHTAIF:** Channel Transfer Abort Interrupt Flag bit
- 1 = An interrupt matching CHAIRQ has been detected and the DMA transfer has been aborted
- 0 = No interrupt is pending

bit 0 **CHERIF:** Channel Address Error Interrupt Flag bit
- 1 = A channel address error has been detected
  Either the source or the destination address is invalid.
- 0 = No interrupt is pending

© 2014-2019 Microchip Technology Inc.

REGISTER 9-10: DCHxSSA: DMA CHANNEL 'x' SOURCE START ADDRESS REGISTER

Bit Range	Bit 31/23/15/7	Bit 30/22/14/6	Bit 29/21/13/5	Bit 28/20/12/4	Bit 27/19/11/3	Bit 26/18/10/2	Bit 25/17/9/1	Bit 24/16/8/0
31:24	R/W-0	R/W-0	R/W-0	R/W-0	R/W-0	R/W-0	R/W-0	R/W-0
	CHSSA<31:24>							
23:16	R/W-0	R/W-0	R/W-0	R/W-0	R/W-0	R/W-0	R/W-0	R/W-0
	CHSSA<23:16>							
15:8	R/W-0	R/W-0	R/W-0	R/W-0	R/W-0	R/W-0	R/W-0	R/W-0
	CHSSA<15:8>							
7:0	R/W-0	R/W-0	R/W-0	R/W-0	R/W-0	R/W-0	R/W-0	R/W-0
	CHSSA<7:0>							

Legend:			
R = Readable bit	W = Writable bit	U = Unimplemented bit, read as '0'	
-n = Value at POR	'1' = Bit is set	'0' = Bit is cleared	x = Bit is unknown

bit 31-0 **CHSSA<31:0>** Channel Source Start Address bits
Channel source start address.
Note: This must be the physical address of the source.

REGISTER 9-11: DCHxDSA: DMA CHANNEL 'x' DESTINATION START ADDRESS REGISTER

Bit Range	Bit 31/23/15/7	Bit 30/22/14/6	Bit 29/21/13/5	Bit 28/20/12/4	Bit 27/19/11/3	Bit 26/18/10/2	Bit 25/17/9/1	Bit 24/16/8/0
31:24	R/W-0	R/W-0	R/W-0	R/W-0	R/W-0	R/W-0	R/W-0	R/W-0
	CHDSA<31:24>							
23:16	R/W-0	R/W-0	R/W-0	R/W-0	R/W-0	R/W-0	R/W-0	R/W-0
	CHDSA<23:16>							
15:8	R/W-0	R/W-0	R/W-0	R/W-0	R/W-0	R/W-0	R/W-0	R/W-0
	CHDSA<15:8>							
7:0	R/W-0	R/W-0	R/W-0	R/W-0	R/W-0	R/W-0	R/W-0	R/W-0
	CHDSA<7:0>							

Legend:			
R = Readable bit	W = Writable bit	U = Unimplemented bit, read as '0'	
-n = Value at POR	'1' = Bit is set	'0' = Bit is cleared	x = Bit is unknown

bit 31-0 **CHDSA<31:0>:** Channel Destination Start Address bits
Channel destination start address.
Note: This must be the physical address of the destination.

REGISTER 9-12: DCHxSSIZ: DMA CHANNEL 'x' SOURCE SIZE REGISTER

Bit Range	Bit 31/23/15/7	Bit 30/22/14/6	Bit 29/21/13/5	Bit 28/20/12/4	Bit 27/19/11/3	Bit 26/18/10/2	Bit 25/17/9/1	Bit 24/16/8/0
31:24	U-0	U-0	U-0	U-0	U-0	U-0	U-0	U-0
	—	—	—	—	—	—	—	—
23:16	U-0	U-0	U-0	U-0	U-0	U-0	U-0	U-0
	—	—	—	—	—	—	—	—
15:8	R/W-0	R/W-0	R/W-0	R/W-0	R/W-0	R/W-0	R/W-0	R/W-0
	CHSSIZ<15:8>							
7:0	R/W-0	R/W-0	R/W-0	R/W-0	R/W-0	R/W-0	R/W-0	R/W-0
	CHSSIZ<7:0>							

Legend:			
R = Readable bit	W = Writable bit	U = Unimplemented bit, read as '0'	
-n = Value at POR	'1' = Bit is set	'0' = Bit is cleared	x = Bit is unknown

bit 31-16 **Unimplemented:** Read as '0'

bit 15-0 **CHSSIZ<15:0>:** Channel Source Size bits

1111111111111111 = 65,535 byte source size
.
.
.
0000000000000010 = 2 byte source size
0000000000000001 = 1 byte source size
0000000000000000 = 65,536 byte source size

REGISTER 9-13: DCHxDSIZ: DMA CHANNEL 'x' DESTINATION SIZE REGISTER

Bit Range	Bit 31/23/15/7	Bit 30/22/14/6	Bit 29/21/13/5	Bit 28/20/12/4	Bit 27/19/11/3	Bit 26/18/10/2	Bit 25/17/9/1	Bit 24/16/8/0
31:24	U-0	U-0	U-0	U-0	U-0	U-0	U-0	U-0
	—	—	—	—	—	—	—	—
23:16	U-0	U-0	U-0	U-0	U-0	U-0	U-0	U-0
	—	—	—	—	—	—	—	—
15:8	R/W-0	R/W-0	R/W-0	R/W-0	R/W-0	R/W-0	R/W-0	R/W-0
	CHDSIZ<15:8>							
7:0	R/W-0	R/W-0	R/W-0	R/W-0	R/W-0	R/W-0	R/W-0	R/W-0
	CHDSIZ<7:0>							

Legend:			
R = Readable bit	W = Writable bit	U = Unimplemented bit, read as '0'	
-n = Value at POR	'1' = Bit is set	'0' = Bit is cleared	x = Bit is unknown

bit 31-16 **Unimplemented:** Read as '0'

bit 15-0 **CHDSIZ<15:0>:** Channel Destination Size bits

1111111111111111 = 65,535 byte destination size
.
.
.
0000000000000010 = 2 byte destination size
0000000000000001 = 1 byte destination size
0000000000000000 = 65,536 byte destination size

© 2014-2019 Microchip Technology Inc.

REGISTER 9-14: DCHxSPTR: DMA CHANNEL 'x' SOURCE POINTER REGISTER

Bit Range	Bit 31/23/15/7	Bit 30/22/14/6	Bit 29/21/13/5	Bit 28/20/12/4	Bit 27/19/11/3	Bit 26/18/10/2	Bit 25/17/9/1	Bit 24/16/8/0
31:24	U-0	U-0	U-0	U-0	U-0	U-0	U-0	U-0
	—	—	—	—	—	—	—	—
23:16	U-0	U-0	U-0	U-0	U-0	U-0	U-0	U-0
	—	—	—	—	—	—	—	—
15:8	R-0	R-0	R-0	R-0	R-0	R-0	R-0	R-0
	CHSPTR<15:8>							
7:0	R-0	R-0	R-0	R-0	R-0	R-0	R-0	R-0
	CHSPTR<7:0>							

Legend:			
R = Readable bit	W = Writable bit	U = Unimplemented bit, read as '0'	
-n = Value at POR	'1' = Bit is set	'0' = Bit is cleared	x = Bit is unknown

bit 31-16 **Unimplemented:** Read as '0'

bit 15-0 **CHSPTR<15:0>:** Channel Source Pointer bits

1111111111111111 = Points to byte 65,535 of the source

•

•

•

0000000000000001 = Points to byte 1 of the source

0000000000000000 = Points to byte 0 of the source

Note: When in Pattern Detect mode, this register is reset on a pattern detect.

REGISTER 9-15: DCHxDPTR: DMA CHANNEL 'x' DESTINATION POINTER REGISTER

Bit Range	Bit 31/23/15/7	Bit 30/22/14/6	Bit 29/21/13/5	Bit 28/20/12/4	Bit 27/19/11/3	Bit 26/18/10/2	Bit 25/17/9/1	Bit 24/16/8/0
31:24	U-0	U-0	U-0	U-0	U-0	U-0	U-0	U-0
	—	—	—	—	—	—	—	—
23:16	U-0	U-0	U-0	U-0	U-0	U-0	U-0	U-0
	—	—	—	—	—	—	—	—
15:8	R-0	R-0	R-0	R-0	R-0	R-0	R-0	R-0
	CHDPTR<15:8>							
7:0	R-0	R-0	R-0	R-0	R-0	R-0	R-0	R-0
	CHDPTR<7:0>							

Legend:			
R = Readable bit	W = Writable bit	U = Unimplemented bit, read as '0'	
-n = Value at POR	'1' = Bit is set	'0' = Bit is cleared	x = Bit is unknown

bit 31-16 **Unimplemented:** Read as '0'

bit 15-0 **CHDPTR<15:0>:** Channel Destination Pointer bits

1111111111111111 = Points to byte 65,535 of the destination

•

•

•

0000000000000001 = Points to byte 1 of the destination

0000000000000000 = Points to byte 0 of the destination

REGISTER 9-16: DCHxCSIZ: DMA CHANNEL 'x' CELL-SIZE REGISTER

Bit Range	Bit 31/23/15/7	Bit 30/22/14/6	Bit 29/21/13/5	Bit 28/20/12/4	Bit 27/19/11/3	Bit 26/18/10/2	Bit 25/17/9/1	Bit 24/16/8/0
31:24	U-0	U-0	U-0	U-0	U-0	U-0	U-0	U-0
	—	—	—	—	—	—	—	—
23:16	U-0	U-0	U-0	U-0	U-0	U-0	U-0	U-0
	—	—	—	—	—	—	—	—
15:8	R/W-0	R/W-0	R/W-0	R/W-0	R/W-0	R/W-0	R/W-0	R/W-0
	CHCSIZ<15:8>							
7:0	R/W-0	R/W-0	R/W-0	R/W-0	R/W-0	R/W-0	R/W-0	R/W-0
	CHCSIZ<7:0>							

Legend:			
R = Readable bit	W = Writable bit	U = Unimplemented bit, read as '0'	
-n = Value at POR	'1' = Bit is set	'0' = Bit is cleared	x = Bit is unknown

bit 31-16 **Unimplemented:** Read as '0'

bit 15-0 **CHCSIZ<15:0>:** Channel Cell-Size bits

1111111111111111 = 65,535 bytes transferred on an event
.
.
.
0000000000000010 = 2 bytes transferred on an event
0000000000000001= 1 byte transferred on an event
0000000000000000 = 65,536 bytes transferred on an event

REGISTER 9-17: DCHxCPTR: DMA CHANNEL 'x' CELL POINTER REGISTER

Bit Range	Bit 31/23/15/7	Bit 30/22/14/6	Bit 29/21/13/5	Bit 28/20/12/4	Bit 27/19/11/3	Bit 26/18/10/2	Bit 25/17/9/1	Bit 24/16/8/0
31:24	U-0	U-0	U-0	U-0	U-0	U-0	U-0	U-0
	—	—	—	—	—	—	—	—
23:16	U-0	U-0	U-0	U-0	U-0	U-0	U-0	U-0
	—	—	—	—	—	—	—	—
15:8	R-0	R-0	R-0	R-0	R-0	R-0	R-0	R-0
	CHCPTR<15:8>							
7:0	R-0	R-0	R-0	R-0	R-0	R-0	R-0	R-0
	CHCPTR<7:0>							

Legend:			
R = Readable bit	W = Writable bit	U = Unimplemented bit, read as '0'	
-n = Value at POR	'1' = Bit is set	'0' = Bit is cleared	x = Bit is unknown

bit 31-16 **Unimplemented:** Read as '0'

bit 15-0 **CHCPTR<7:0>:** Channel Cell Progress Pointer bits

1111111111111111 = 65,535 bytes have been transferred since the last event
.
.
.
0000000000000001 = 1 byte has been transferred since the last event
0000000000000000 = 0 bytes have been transferred since the last event

Note: When in Pattern Detect mode, this register is reset on a pattern detect.

© 2014-2019 Microchip Technology Inc.

REGISTER 9-18: DCHxDAT: DMA CHANNEL 'x' PATTERN DATA REGISTER

Bit Range	Bit 31/23/15/7	Bit 30/22/14/6	Bit 29/21/13/5	Bit 28/20/12/4	Bit 27/19/11/3	Bit 26/18/10/2	Bit 25/17/9/1	Bit 24/16/8/0
31:24	U-0	U-0	U-0	U-0	U-0	U-0	U-0	U-0
	—	—	—	—	—	—	—	—
23:16	U-0	U-0	U-0	U-0	U-0	U-0	U-0	U-0
	—	—	—	—	—	—	—	—
15:8	U-0	U-0	U-0	U-0	U-0	U-0	U-0	U-0
	—	—	—	—	—	—	—	—
7:0	R/W-0	R/W-0	R/W-0	R/W-0	R/W-0	R/W-0	R/W-0	R/W-0
	CHPDAT<7:0>							

Legend:			
R = Readable bit	W = Writable bit	U = Unimplemented bit, read as '0'	
-n = Value at POR	'1' = Bit is set	'0' = Bit is cleared	x = Bit is unknown

bit 31-8 **Unimplemented:** Read as '0'

bit 7-0 **CHPDAT<7:0>:** Channel Data Register bits

Pattern Terminate mode:
Data to be matched must be stored in this register to allow terminate on match.

All other modes:
Unused.

NOTES:

© 2014-2019 Microchip Technology Inc.

10.0 USB ON-THE-GO (OTG)

Note: This data sheet summarizes the features of the PIC32MX1XX/2XX/5XX 64/100-pin family of devices. It is not intended to be a comprehensive reference source. To complement the information in this data sheet, refer to **Section 27. "USB On-The-Go (OTG)"** (DS60001126) in the *"PIC32 Family Reference Manual"*, which is available from the Microchip web site (www.microchip.com/PIC32).

The Universal Serial Bus (USB) module contains analog and digital components to provide a USB 2.0 full-speed and low-speed embedded host, full-speed device or OTG implementation with a minimum of external components. This module in Host mode is intended for use as an embedded host and therefore does not implement a UHCI or OHCI controller.

The USB module consists of the clock generator, the USB voltage comparators, the transceiver, the Serial Interface Engine (SIE), a dedicated USB DMA controller, pull-up and pull-down resistors, and the register interface. A block diagram of the PIC32 USB OTG module is presented in Figure 10-1.

The clock generator provides the 48 MHz clock required for USB full-speed and low-speed communication. The voltage comparators monitor the voltage on the VBUS pin to determine the state of the bus. The transceiver provides the analog translation between the USB bus and the digital logic. The SIE is a state machine that transfers data to and from the endpoint buffers and generates the hardware protocol for data transfers. The USB DMA controller transfers data between the data buffers in RAM and the SIE. The integrated pull-up and pull-down resistors eliminate the need for external signaling components. The register interface allows the CPU to configure and communicate with the module.

The PIC32 USB module includes the following features:

- USB Full-speed support for host and device
- Low-speed host support
- USB OTG support
- Integrated signaling resistors
- Integrated analog comparators for VBUS monitoring
- Integrated USB transceiver
- Transaction handshaking performed by hardware
- Endpoint buffering anywhere in system RAM
- Integrated DMA to access system RAM and Flash

Note: The implementation and use of the USB specifications, and other third party specifications or technologies, may require licensing; including, but not limited to, USB Implementers Forum, Inc. (also referred to as USB-IF). The user is fully responsible for investigating and satisfying any applicable licensing obligations.

FIGURE 10-1: PIC32MX1XX/2XX/5XX USB INTERFACE DIAGRAM

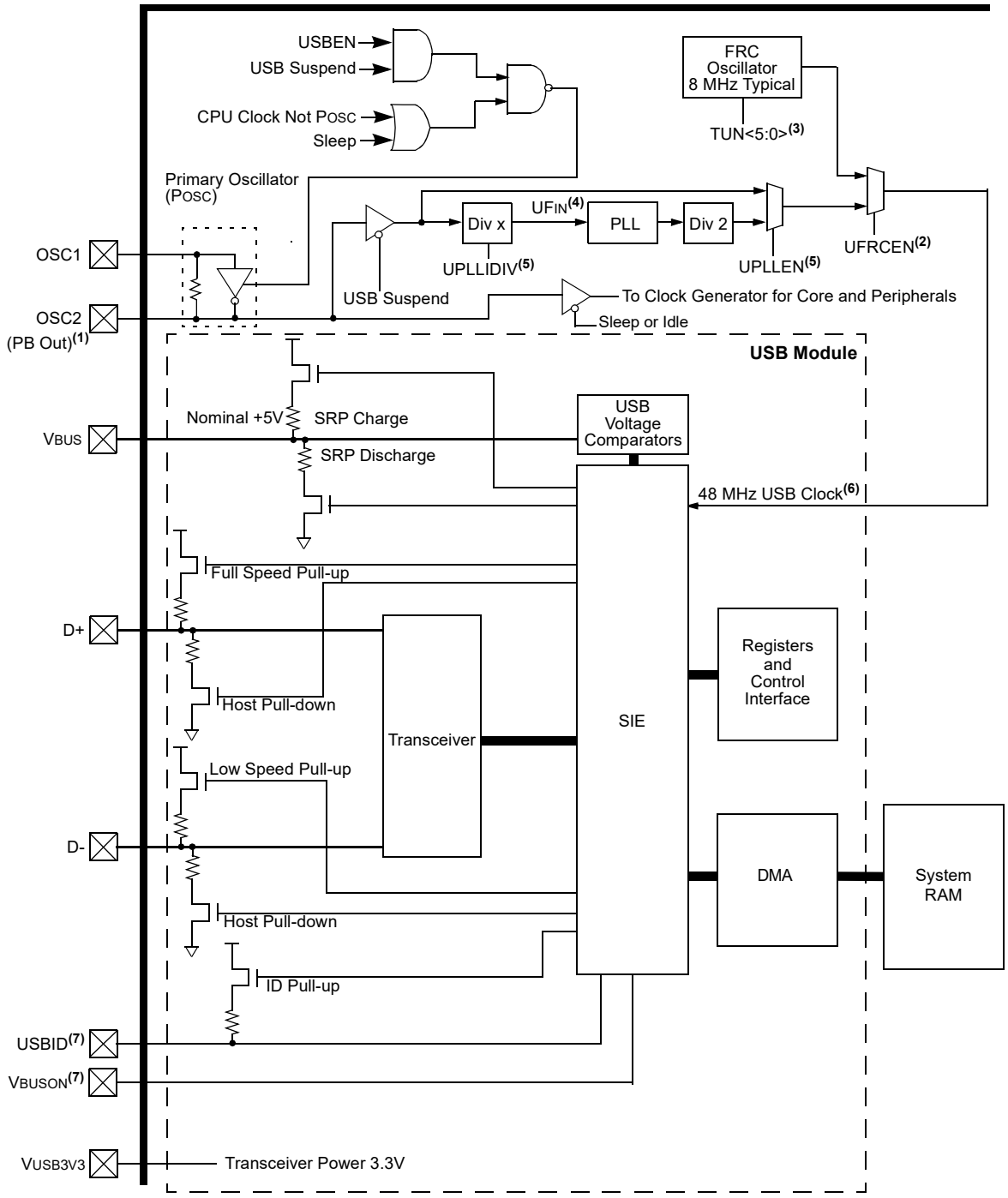

Note 1: PB clock is only available on this pin for select EC modes.
2: This bit field is contained in the OSCCON register.
3: This bit field is contained in the OSCTRM register.
4: USB PLL UFIN requirements: 4 MHz.
5: This bit field is contained in the DEVCFG2 register.
6: A 48 MHz clock is required for proper USB operation.
7: Pins can be used as GPIO when the USB module is disabled or if the USB is enabled but DEVCFG3<31:30> = ‘0b00.

© 2014-2019 Microchip Technology Inc.

10.1 Control Registers

TABLE 10-1: USB REGISTER MAP

Virtual Address (BF88_#)	Register Name(1)	Bit Range	Bits 31/15	30/14	29/13	28/12	27/11	26/10	25/9	24/8	23/7	22/6	21/5	20/4	19/3	18/2	17/1	16/0	All Resets
5040	U1OTGIR(2)	31:16	—	—	—	—	—	—	—	—	—	—	—	—	—	—	—	—	0000
		15:0	—	—	—	—	—	—	—	—	IDIF	T1MSECIF	LSTATEIF	ACTVIF	SESVDIF	SESENDIF	—	VBUSVDIF	0000
5050	U1OTGIE	31:16	—	—	—	—	—	—	—	—	—	—	—	—	—	—	—	—	0000
		15:0	—	—	—	—	—	—	—	—	IDIE	T1MSECIE	LSTATEIE	ACTVIE	SESVDIE	SESENDIE	—	VBUSVDIE	0000
5060	U1OTGSTAT(3)	31:16	—	—	—	—	—	—	—	—	—	—	—	—	—	—	—	—	0000
		15:0	—	—	—	—	—	—	—	—	ID	—	LSTATE	—	SESVD	SESEND	—	VBUSVD	0000
5070	U1OTGCON	31:16	—	—	—	—	—	—	—	—	—	—	—	—	—	—	—	—	0000
		15:0	—	—	—	—	—	—	—	—	DPPULUP	DMPULUP	DPPULDWN	DMPULDWN	VBUSON	OTGEN	VBUSCHG	VBUSDIS	0000
5080	U1PWRC	31:16	—	—	—	—	—	—	—	—	—	—	—	—	—	—	—	—	0000
		15:0	—	—	—	—	—	—	—	—	UACTPND(4)	—	—	USLPGRD	USBBUSY	—	USUSPEND	USBPWR	0000
5200	U1IR(2)	31:16	—	—	—	—	—	—	—	—	—	—	—	—	—	—	—	—	0000
		15:0	—	—	—	—	—	—	—	—	STALLIF	ATTACHIF	RESUMEIF	IDLEIF	TRNIF	SOFIF	UERRIF	URSTIF	0000
																		DETACHIF	0000
5210	U1IE	31:16	—	—	—	—	—	—	—	—	—	—	—	—	—	—	—	—	0000
		15:0	—	—	—	—	—	—	—	—	STALLIE	ATTACHIE	RESUMEIE	IDLEIE	TRNIE	SOFIE	UERRIE	URSTIE	0000
																		DETACHIE	0000
5220	U1EIR(2)	31:16	—	—	—	—	—	—	—	—	—	—	—	—	—	—	—	—	0000
		15:0	—	—	—	—	—	—	—	—	BTSEF	BMXEF	DMAEF	BTOEF	DFN8EF	CRC16EF	CRC5EF	PIDEF	0000
																	EOFEE		0000
5230	U1EIE	31:16	—	—	—	—	—	—	—	—	—	—	—	—	—	—	—	—	0000
		15:0	—	—	—	—	—	—	—	—	BTSEE	BMXEE	DMAEE	BTOEE	DFN8EE	CRC16EE	CRC5EE	PIDEE	0000
																	EOFEE		0000
5240	U1STAT(3)	31:16	—	—	—	—	—	—	—	—	—	—	—	—	—	—	—	—	0000
		15:0	—	—	—	—	—	—	—	—	ENDPT<3:0>				DIR	PPBI	—	—	0000
5250	U1CON	31:16	—	—	—	—	—	—	—	—	—	—	—	—	—	—	—	—	0000
		15:0	—	—	—	—	—	—	—	—	JSTATE	SE0	PKTDIS	USBRST	HOSTEN	RESUME	PPBRST	USBEN	0000
													TOKBUSY					SOFEN	0000
5260	U1ADDR	31:16	—	—	—	—	—	—	—	—	—	—	—	—	—	—	—	—	0000
		15:0	—	—	—	—	—	—	—	—	LSPDEN	DEVADDR<6:0>							0000
5270	U1BDTP1	31:16	—	—	—	—	—	—	—	—	—	—	—	—	—	—	—	—	0000
		15:0	—	—	—	—	—	—	—	—	BDTPTRL<15:9>							—	0000

Legend: x = unknown value on Reset; — = unimplemented, read as '0'. Reset values are shown in hexadecimal.

Note 1: With the exception of those noted, all registers in this table (except as noted) have corresponding CLR, SET and INV registers at its virtual address, plus an offset of 0x4, 0x8 and 0xC respectively. See **Section 11.2 "CLR, SET, and INV Registers"** for more information.

2: This register does not have associated SET and INV registers.

3: This register does not have associated CLR, SET and INV registers.

4: Reset value for this bit is undefined.

© 2014-2019 Microchip Technology Inc.

TABLE 10-1: USB REGISTER MAP (CONTINUED)

Virtual Address (BF88_#)	Register Name(1)	Bit Range	Bits 31/15	30/14	29/13	28/12	27/11	26/10	25/9	24/8	23/7	22/6	21/5	20/4	19/3	18/2	17/1	16/0	All Resets
5280	U1FRML(3)	31:16	—	—	—	—	—	—	—	—	—	—	—	—	—	—	—	—	0000
		15:0	—	—	—	—	—	—	—	—	FRML<7:0>								0000
5290	U1FRMH(3)	31:16	—	—	—	—	—	—	—	—	—	—	—	—	—	—	—	—	0000
		15:0	—	—	—	—	—	—	—	—	—	—	—	—	—	FRMH<2:0>			0000
52A0	U1TOK	31:16	—	—	—	—	—	—	—	—	—	—	—	—	—	—	—	—	0000
		15:0	—	—	—	—	—	—	—	—	PID<3:0>				EP<3:0>				0000
52B0	U1SOF	31:16	—	—	—	—	—	—	—	—	—	—	—	—	—	—	—	—	0000
		15:0	—	—	—	—	—	—	—	—	CNT<7:0>								0000
52C0	U1BDTP2	31:16	—	—	—	—	—	—	—	—	—	—	—	—	—	—	—	—	0000
		15:0	—	—	—	—	—	—	—	—	BDTPTRH<23:16>								0000
52D0	U1BDTP3	31:16	—	—	—	—	—	—	—	—	—	—	—	—	—	—	—	—	0000
		15:0	—	—	—	—	—	—	—	—	BDTPTRU<31:24>								0000
52E0	U1CNFG1	31:16	—	—	—	—	—	—	—	—	—	—	—	—	—	—	—	—	0000
		15:0	—	—	—	—	—	—	—	—	UTEYE	—	—	USBSIDL	LSDEV	—	—	UASUSPND	0000
5300	U1EP0	31:16	—	—	—	—	—	—	—	—	—	—	—	—	—	—	—	—	0000
		15:0	—	—	—	—	—	—	—	—	LSPD	RETRYDIS	—	EPCONDIS	EPRXEN	EPTXEN	EPSTALL	EPHSHK	0000
5310	U1EP1	31:16	—	—	—	—	—	—	—	—	—	—	—	—	—	—	—	—	0000
		15:0	—	—	—	—	—	—	—	—	—	—	—	EPCONDIS	EPRXEN	EPTXEN	EPSTALL	EPHSHK	0000
5320	U1EP2	31:16	—	—	—	—	—	—	—	—	—	—	—	—	—	—	—	—	0000
		15:0	—	—	—	—	—	—	—	—	—	—	—	EPCONDIS	EPRXEN	EPTXEN	EPSTALL	EPHSHK	0000
5330	U1EP3	31:16	—	—	—	—	—	—	—	—	—	—	—	—	—	—	—	—	0000
		15:0	—	—	—	—	—	—	—	—	—	—	—	EPCONDIS	EPRXEN	EPTXEN	EPSTALL	EPHSHK	0000
5340	U1EP4	31:16	—	—	—	—	—	—	—	—	—	—	—	—	—	—	—	—	0000
		15:0	—	—	—	—	—	—	—	—	—	—	—	EPCONDIS	EPRXEN	EPTXEN	EPSTALL	EPHSHK	0000
5350	U1EP5	31:16	—	—	—	—	—	—	—	—	—	—	—	—	—	—	—	—	0000
		15:0	—	—	—	—	—	—	—	—	—	—	—	EPCONDIS	EPRXEN	EPTXEN	EPSTALL	EPHSHK	0000
5360	U1EP6	31:16	—	—	—	—	—	—	—	—	—	—	—	—	—	—	—	—	0000
		15:0	—	—	—	—	—	—	—	—	—	—	—	EPCONDIS	EPRXEN	EPTXEN	EPSTALL	EPHSHK	0000
5370	U1EP7	31:16	—	—	—	—	—	—	—	—	—	—	—	—	—	—	—	—	0000
		15:0	—	—	—	—	—	—	—	—	—	—	—	EPCONDIS	EPRXEN	EPTXEN	EPSTALL	EPHSHK	0000
5380	U1EP8	31:16	—	—	—	—	—	—	—	—	—	—	—	—	—	—	—	—	0000
		15:0	—	—	—	—	—	—	—	—	—	—	—	EPCONDIS	EPRXEN	EPTXEN	EPSTALL	EPHSHK	0000

Legend: x = unknown value on Reset; — = unimplemented, read as '0'. Reset values are shown in hexadecimal.

Note 1: With the exception of those noted, all registers in this table (except as noted) have corresponding CLR, SET and INV registers at its virtual address, plus an offset of 0x4, 0x8 and 0xC respectively. See **Section 11.2 "CLR, SET, and INV Registers"** for more information.

2: This register does not have associated SET and INV registers.

3: This register does not have associated CLR, SET and INV registers.

4: Reset value for this bit is undefined.

© 2014-2019 Microchip Technology Inc.

TABLE 10-1: USB REGISTER MAP (CONTINUED)

Virtual Address (BF88_#)	Register Name(1)	Bit Range	Bits																All Resets
			31/15	30/14	29/13	28/12	27/11	26/10	25/9	24/8	23/7	22/6	21/5	20/4	19/3	18/2	17/1	16/0	
5390	U1EP9	31:16	—	—	—	—	—	—	—	—	—	—	—	—	—	—	—	—	0000
		15:0	—	—	—	—	—	—	—	—	—	—	—	EPCONDIS	EPRXEN	EPTXEN	EPSTALL	EPHSHK	0000
53A0	U1EP10	31:16	—	—	—	—	—	—	—	—	—	—	—	—	—	—	—	—	0000
		15:0	—	—	—	—	—	—	—	—	—	—	—	EPCONDIS	EPRXEN	EPTXEN	EPSTALL	EPHSHK	0000
53B0	U1EP11	31:16	—	—	—	—	—	—	—	—	—	—	—	—	—	—	—	—	0000
		15:0	—	—	—	—	—	—	—	—	—	—	—	EPCONDIS	EPRXEN	EPTXEN	EPSTALL	EPHSHK	0000
53C0	U1EP12	31:16	—	—	—	—	—	—	—	—	—	—	—	—	—	—	—	—	0000
		15:0	—	—	—	—	—	—	—	—	—	—	—	EPCONDIS	EPRXEN	EPTXEN	EPSTALL	EPHSHK	0000
53D0	U1EP13	31:16	—	—	—	—	—	—	—	—	—	—	—	—	—	—	—	—	0000
		15:0	—	—	—	—	—	—	—	—	—	—	—	EPCONDIS	EPRXEN	EPTXEN	EPSTALL	EPHSHK	0000
53E0	U1EP14	31:16	—	—	—	—	—	—	—	—	—	—	—	—	—	—	—	—	0000
		15:0	—	—	—	—	—	—	—	—	—	—	—	EPCONDIS	EPRXEN	EPTXEN	EPSTALL	EPHSHK	0000
53F0	U1EP15	31:16	—	—	—	—	—	—	—	—	—	—	—	—	—	—	—	—	0000
		15:0	—	—	—	—	—	—	—	—	—	—	—	EPCONDIS	EPRXEN	EPTXEN	EPSTALL	EPHSHK	0000

Legend: x = unknown value on Reset; — = unimplemented, read as '0'. Reset values are shown in hexadecimal.

Note 1: With the exception of those noted, all registers in this table (except as noted) have corresponding CLR, SET and INV registers at its virtual address, plus an offset of 0x4, 0x8 and 0xC respectively. See **Section 11.2 "CLR, SET, and INV Registers"** for more information.

2: This register does not have associated SET and INV registers.

3: This register does not have associated CLR, SET and INV registers.

4: Reset value for this bit is undefined.

© 2014-2019 Microchip Technology Inc.

REGISTER 10-1: U1OTGIR: USB OTG INTERRUPT STATUS REGISTER

Bit Range	Bit 31/23/15/7	Bit 30/22/14/6	Bit 29/21/13/5	Bit 28/20/12/4	Bit 27/19/11/3	Bit 26/18/10/2	Bit 25/17/9/1	Bit 24/16/8/0
31:24	U-0	U-0	U-0	U-0	U-0	U-0	U-0	U-0
	—	—	—	—	—	—	—	—
23:16	U-0	U-0	U-0	U-0	U-0	U-0	U-0	U-0
	—	—	—	—	—	—	—	—
15:8	U-0	U-0	U-0	U-0	U-0	U-0	U-0	U-0
	—	—	—	—	—	—	—	—
7:0	R/WC-0, HS	R/WC-0, HS	R/WC-0, HS	R/WC-0, HS	R/WC-0, HS	R/WC-0, HS	U-0	R/WC-0, HS
	IDIF	T1MSECIF	LSTATEIF	ACTVIF	SESVDIF	SESENDIF	—	VBUSVDIF

Legend:	WC = Write ‘1’ to clear	HS = Hardware Settable bit	
R = Readable bit	W = Writable bit	U = Unimplemented bit, read as ‘0’	
-n = Value at POR	‘1’ = Bit is set	‘0’ = Bit is cleared	x = Bit is unknown

bit 31-8 **Unimplemented:** Read as ‘0’

bit 7 **IDIF:** ID State Change Indicator bit
- 1 = Change in ID state detected
- 0 = No change in ID state detected

bit 6 **T1MSECIF:** 1 Millisecond Timer bit
- 1 = 1 millisecond timer has expired
- 0 = 1 millisecond timer has not expired

bit 5 **LSTATEIF:** Line State Stable Indicator bit
- 1 = USB line state has been stable for 1millisecond, but different from last time
- 0 = USB line state has not been stable for 1 millisecond

bit 4 **ACTVIF:** Bus Activity Indicator bit
- 1 = Activity on the D+, D-, ID or VBUS pins has caused the device to wake-up
- 0 = Activity has not been detected

bit 3 **SESVDIF:** Session Valid Change Indicator bit
- 1 = VBUS voltage has dropped below the session end level
- 0 = VBUS voltage has not dropped below the session end level

bit 2 **SESENDIF:** B-Device VBUS Change Indicator bit
- 1 = A change on the session end input was detected
- 0 = No change on the session end input was detected

bit 1 **Unimplemented:** Read as ‘0’

bit 0 **VBUSVDIF:** A-Device VBUS Change Indicator bit
- 1 = Change on the session valid input detected
- 0 = No change on the session valid input detected

© 2014-2019 Microchip Technology Inc.

REGISTER 10-2: U1OTGIE: USB OTG INTERRUPT ENABLE REGISTER

Bit Range	Bit 31/23/15/7	Bit 30/22/14/6	Bit 29/21/13/5	Bit 28/20/12/4	Bit 27/19/11/3	Bit 26/18/10/2	Bit 25/17/9/1	Bit 24/16/8/0
31:24	U-0	U-0	U-0	U-0	U-0	U-0	U-0	U-0
	—	—	—	—	—	—	—	—
23:16	U-0	U-0	U-0	U-0	U-0	U-0	U-0	U-0
	—	—	—	—	—	—	—	—
15:8	U-0	U-0	U-0	U-0	U-0	U-0	U-0	U-0
	—	—	—	—	—	—	—	—
7:0	R/W-0	R/W-0	R/W-0	R/W-0	R/W-0	R/W-0	U-0	R/W-0
	IDIE	T1MSECIE	LSTATEIE	ACTVIE	SESVDIE	SESENDIE	—	VBUSVDIE

Legend:			
R = Readable bit	W = Writable bit	U = Unimplemented bit, read as ‘0’	
-n = Value at POR	‘1’ = Bit is set	‘0’ = Bit is cleared	x = Bit is unknown

bit 31-8 **Unimplemented:** Read as ‘0’

bit 7 **IDIE:** ID Interrupt Enable bit
1 = ID interrupt enabled
0 = ID interrupt disabled

bit 6 **T1MSECIE:** 1 Millisecond Timer Interrupt Enable bit
1 = 1 millisecond timer interrupt enabled
0 = 1 millisecond timer interrupt disabled

bit 5 **LSTATEIE:** Line State Interrupt Enable bit
1 = Line state interrupt enabled
0 = Line state interrupt disabled

bit 4 **ACTVIE:** Bus Activity Interrupt Enable bit
1 = ACTIVITY interrupt enabled
0 = ACTIVITY interrupt disabled

bit 3 **SESVDIE:** Session Valid Interrupt Enable bit
1 = Session valid interrupt enabled
0 = Session valid interrupt disabled

bit 2 **SESENDIE:** B-Session End Interrupt Enable bit
1 = B-session end interrupt enabled
0 = B-session end interrupt disabled

bit 1 **Unimplemented:** Read as ‘0’

bit 0 **VBUSVDIE:** A-VBUS Valid Interrupt Enable bit
1 = A-VBUS valid interrupt enabled
0 = A-VBUS valid interrupt disabled

REGISTER 10-3: U1OTGSTAT: USB OTG STATUS REGISTER

Bit Range	Bit 31/23/15/7	Bit 30/22/14/6	Bit 29/21/13/5	Bit 28/20/12/4	Bit 27/19/11/3	Bit 26/18/10/2	Bit 25/17/9/1	Bit 24/16/8/0
31:24	U-0	U-0	U-0	U-0	U-0	U-0	U-0	U-0
	—	—	—	—	—	—	—	—
23:16	U-0	U-0	U-0	U-0	U-0	U-0	U-0	U-0
	—	—	—	—	—	—	—	—
15:8	U-0	U-0	U-0	U-0	U-0	U-0	U-0	U-0
	—	—	—	—	—	—	—	—
7:0	R-0	U-0	R-0	U-0	R-0	R-0	U-0	R-0
	ID	—	LSTATE	—	SESVD	SESEND	—	VBUSVD

Legend:			
R = Readable bit	W = Writable bit	U = Unimplemented bit, read as ‘0’	
-n = Value at POR	‘1’ = Bit is set	‘0’ = Bit is cleared	x = Bit is unknown

bit 31-8 **Unimplemented:** Read as ‘0’

bit 7 **ID:** ID Pin State Indicator bit
1 = No cable is attached or a Type-B cable has been plugged into the USB receptacle
0 = A Type-A cable has been plugged into the USB receptacle

bit 6 **Unimplemented:** Read as ‘0’

bit 5 **LSTATE:** Line State Stable Indicator bit
1 = USB line state (U1CON<SE0> and U1CON<JSTATE>) has been stable for the previous 1 ms
0 = USB line state (U1CON<SE0> and U1CON<JSTATE>) has not been stable for the previous 1 ms

bit 4 **Unimplemented:** Read as ‘0’

bit 3 **SESVD:** Session Valid Indicator bit
1 = VBUS voltage is above Session Valid on the A or B device
0 = VBUS voltage is below Session Valid on the A or B device

bit 2 **SESEND:** B-Device Session End Indicator bit
1 = VBUS voltage is below Session Valid on the B device
0 = VBUS voltage is above Session Valid on the B device

bit 1 **Unimplemented:** Read as ‘0’

bit 0 **VBUSVD:** A-Device VBUS Valid Indicator bit
1 = VBUS voltage is above Session Valid on the A device
0 = VBUS voltage is below Session Valid on the A device

© 2014-2019 Microchip Technology Inc.

REGISTER 10-4: U1OTGCON: USB OTG CONTROL REGISTER

Bit Range	Bit 31/23/15/7	Bit 30/22/14/6	Bit 29/21/13/5	Bit 28/20/12/4	Bit 27/19/11/3	Bit 26/18/10/2	Bit 25/17/9/1	Bit 24/16/8/0
31:24	U-0	U-0	U-0	U-0	U-0	U-0	U-0	U-0
	—	—	—	—	—	—	—	—
23:16	U-0	U-0	U-0	U-0	U-0	U-0	U-0	U-0
	—	—	—	—	—	—	—	—
15:8	U-0	U-0	U-0	U-0	U-0	U-0	U-0	U-0
	—	—	—	—	—	—	—	—
7:0	R/W-0	R/W-0	R/W-0	R/W-0	R/W-0	R/W-0	R/W-0	R/W-0
	DPPULUP	DMPULUP	DPPULDWN	DMPULDWN	VBUSON	OTGEN	VBUSCHG	VBUSDIS

Legend:			
R = Readable bit	W = Writable bit	U = Unimplemented bit, read as ‘0’	
-n = Value at POR	‘1’ = Bit is set	‘0’ = Bit is cleared	x = Bit is unknown

bit 31-8 **Unimplemented:** Read as ‘0’

bit 7 **DPPULUP:** D+ Pull-Up Enable bit
1 = D+ data line pull-up resistor is enabled
0 = D+ data line pull-up resistor is disabled

bit 6 **DMPULUP:** D- Pull-Up Enable bit
1 = D- data line pull-up resistor is enabled
0 = D- data line pull-up resistor is disabled

bit 5 **DPPULDWN:** D+ Pull-Down Enable bit
1 = D+ data line pull-down resistor is enabled
0 = D+ data line pull-down resistor is disabled

bit 4 **DMPULDWN:** D- Pull-Down Enable bit
1 = D- data line pull-down resistor is enabled
0 = D- data line pull-down resistor is disabled

bit 3 **VBUSON:** VBUS Power-on bit
1 = VBUS line is powered
0 = VBUS line is not powered

bit 2 **OTGEN:** OTG Functionality Enable bit
1 = DPPULUP, DMPULUP, DPPULDWN and DMPULDWN bits are under software control
0 = DPPULUP, DMPULUP, DPPULDWN and DMPULDWN bits are under USB hardware control

bit 1 **VBUSCHG:** VBUS Charge Enable bit
1 = VBUS line is charged through a pull-up resistor
0 = VBUS line is not charged through a resistor

bit 0 **VBUSDIS:** VBUS Discharge Enable bit
1 = VBUS line is discharged through a pull-down resistor
0 = VBUS line is not discharged through a resistor

REGISTER 10-5: U1PWRC: USB POWER CONTROL REGISTER

Bit Range	Bit 31/23/15/7	Bit 30/22/14/6	Bit 29/21/13/5	Bit 28/20/12/4	Bit 27/19/11/3	Bit 26/18/10/2	Bit 25/17/9/1	Bit 24/16/8/0
31:24	U-0	U-0	U-0	U-0	U-0	U-0	U-0	U-0
	—	—	—	—	—	—	—	—
23:16	U-0	U-0	U-0	U-0	U-0	U-0	U-0	U-0
	—	—	—	—	—	—	—	—
15:8	U-0	U-0	U-0	U-0	U-0	U-0	U-0	U-0
	—	—	—	—	—	—	—	—
7:0	R-0	U-0	U-0	R/W-0	R/W-0	U-0	R/W-0	R/W-0
	UACTPND	—	—	USLPGRD	USBBUSY	—	USUSPEND	USBPWR

Legend:			
R = Readable bit	W = Writable bit	U = Unimplemented bit, read as ‘0’	
-n = Value at POR	‘1’ = Bit is set	‘0’ = Bit is cleared	x = Bit is unknown

bit 31-8 **Unimplemented:** Read as ‘0’

bit 7 **UACTPND:** USB Activity Pending bit

1 = USB bus activity has been detected; but an interrupt is pending, it has not been generated yet
0 = An interrupt is not pending

bit 6-5 **Unimplemented:** Read as ‘0’

bit 4 **USLPGRD:** USB Sleep Entry Guard bit

1 = Sleep entry is blocked if USB bus activity is detected or if a notification is pending
0 = USB module does not block Sleep entry

bit 3 **USBBUSY:** USB Module Busy bit(1)

1 = USB module is active or disabled, but not ready to be enabled
0 = USB module is not active and is ready to be enabled

Note: When USBPWR = 0 and USBBUSY = 1, status from all other registers is invalid and writes to all USB module registers produce undefined results.

bit 2 **Unimplemented:** Read as ‘0’

bit 1 **USUSPEND:** USB Suspend Mode bit

1 = USB module is placed in Suspend mode
(The 48 MHz USB clock will be gated off. The transceiver is placed in a low-power state.)
0 = USB module operates normally

bit 0 **USBPWR:** USB Operation Enable bit

1 = USB module is turned on
0 = USB module is disabled
(Outputs held inactive, device pins not used by USB, analog features are shut down to reduce power consumption.)

© 2014-2019 Microchip Technology Inc.

REGISTER 10-6: U1IR: USB INTERRUPT REGISTER

Bit Range	Bit 31/23/15/7	Bit 30/22/14/6	Bit 29/21/13/5	Bit 28/20/12/4	Bit 27/19/11/3	Bit 26/18/10/2	Bit 25/17/9/1	Bit 24/16/8/0
31:24	U-0	U-0	U-0	U-0	U-0	U-0	U-0	U-0
	—	—	—	—	—	—	—	—
23:16	U-0	U-0	U-0	U-0	U-0	U-0	U-0	U-0
	—	—	—	—	—	—	—	—
15:8	U-0	U-0	U-0	U-0	U-0	U-0	U-0	U-0
	—	—	—	—	—	—	—	—
7:0	R/WC-0, HS	R/WC-0, HS	R/WC-0, HS	R/WC-0, HS	R/WC-0, HS	R/WC-0, HS	R-0	R/WC-0, HS
	STALLIF	ATTACHIF(1)	RESUMEIF(2)	IDLEIF	TRNIF(3)	SOFIF	UERRIF(4)	URSTIF(5) / DETACHIF(6)

Legend:	WC = Write ‘1’ to clear	HS = Hardware Settable bit	
R = Readable bit	W = Writable bit	U = Unimplemented bit, read as ‘0’	
-n = Value at POR	‘1’ = Bit is set	‘0’ = Bit is cleared	x = Bit is unknown

bit 31-8 **Unimplemented:** Read as ‘0’

bit 7 **STALLIF:** STALL Handshake Interrupt bit
1 = In Host mode, a STALL handshake was received during the handshake phase of the transaction
In Device mode, a STALL handshake was transmitted during the handshake phase of the transaction
0 = STALL handshake has not been sent

bit 6 **ATTACHIF:** Peripheral Attach Interrupt bit(1)
1 = Peripheral attachment was detected by the USB module
0 = Peripheral attachment was not detected

bit 5 **RESUMEIF:** Resume Interrupt bit(2)
1 = K-State is observed on the D+ or D- pin for 2.5 µs
0 = K-State is not observed

bit 4 **IDLEIF:** Idle Detect Interrupt bit
1 = Idle condition detected (constant Idle state of 3 ms or more)
0 = No Idle condition detected

bit 3 **TRNIF:** Token Processing Complete Interrupt bit(3)
1 = Processing of current token is complete; a read of the U1STAT register will provide endpoint information
0 = Processing of current token not complete

bit 2 **SOFIF:** SOF Token Interrupt bit
1 = SOF token received by the peripheral or the SOF threshold reached by the host
0 = SOF token was not received nor threshold reached

bit 1 **UERRIF:** USB Error Condition Interrupt bit(4)
1 = Unmasked error condition has occurred
0 = Unmasked error condition has not occurred

bit 0 **URSTIF:** USB Reset Interrupt bit (Device mode)(5)
1 = Valid USB Reset has occurred
0 = No USB Reset has occurred

bit 0 **DETACHIF:** USB Detach Interrupt bit (Host mode)(6)
1 = Peripheral detachment was detected by the USB module
0 = Peripheral detachment was not detected

Note 1: This bit is valid only if the HOSTEN bit is set (see Register 10-11), there is no activity on the USB for 2.5 µs, and the current bus state is not SE0.
2: When not in Suspend mode, this interrupt should be disabled.
3: Clearing this bit will cause the STAT FIFO to advance.
4: Only error conditions enabled through the U1EIE register will set this bit.
5: Device mode.
6: Host mode.

REGISTER 10-7: U1IE: USB INTERRUPT ENABLE REGISTER

Bit Range	Bit 31/23/15/7	Bit 30/22/14/6	Bit 29/21/13/5	Bit 28/20/12/4	Bit 27/19/11/3	Bit 26/18/10/2	Bit 25/17/9/1	Bit 24/16/8/0
31:24	U-0	U-0	U-0	U-0	U-0	U-0	U-0	U-0
	—	—	—	—	—	—	—	—
23:16	U-0	U-0	U-0	U-0	U-0	U-0	U-0	U-0
	—	—	—	—	—	—	—	—
15:8	U-0	U-0	U-0	U-0	U-0	U-0	U-0	U-0
	—	—	—	—	—	—	—	—
7:0	R/W-0	R/W-0	R/W-0	R/W-0	R/W-0	R/W-0	R/W-0	R/W-0
	STALLIE	ATTACHIE	RESUMEIE	IDLEIE	TRNIE	SOFIE	UERRIE(1)	URSTIE(2) / DETACHIE(3)

Legend:			
R = Readable bit	W = Writable bit	U = Unimplemented bit, read as ‘0’	
-n = Value at POR	‘1’ = Bit is set	‘0’ = Bit is cleared	x = Bit is unknown

bit 31-8 **Unimplemented:** Read as ‘0’

bit 7 **STALLIE:** STALL Handshake Interrupt Enable bit
1 = STALL interrupt enabled
0 = STALL interrupt disabled

bit 6 **ATTACHIE:** ATTACH Interrupt Enable bit
1 = ATTACH interrupt enabled
0 = ATTACH interrupt disabled

bit 5 **RESUMEIE:** RESUME Interrupt Enable bit
1 = RESUME interrupt enabled
0 = RESUME interrupt disabled

bit 4 **IDLEIE:** Idle Detect Interrupt Enable bit
1 = Idle interrupt enabled
0 = Idle interrupt disabled

bit 3 **TRNIE:** Token Processing Complete Interrupt Enable bit
1 = TRNIF interrupt enabled
0 = TRNIF interrupt disabled

bit 2 **SOFIE:** SOF Token Interrupt Enable bit
1 = SOFIF interrupt enabled
0 = SOFIF interrupt disabled

bit 1 **UERRIE:** USB Error Interrupt Enable bit(1)
1 = USB Error interrupt enabled
0 = USB Error interrupt disabled

bit 0 **URSTIE:** USB Reset Interrupt Enable bit(2)
1 = URSTIF interrupt enabled
0 = URSTIF interrupt disabled

DETACHIE: USB Detach Interrupt Enable bit(3)
1 = DATTCHIF interrupt enabled
0 = DATTCHIF interrupt disabled

Note 1: For an interrupt to propagate USBIF, the UERRIE bit (U1IE<1>) must be set.
2: Device mode.
3: Host mode.

© 2014-2019 Microchip Technology Inc.

REGISTER 10-8: U1EIR: USB ERROR INTERRUPT STATUS REGISTER

Bit Range	Bit 31/23/15/7	Bit 30/22/14/6	Bit 29/21/13/5	Bit 28/20/12/4	Bit 27/19/11/3	Bit 26/18/10/2	Bit 25/17/9/1	Bit 24/16/8/0
31:24	U-0	U-0	U-0	U-0	U-0	U-0	U-0	U-0
	—	—	—	—	—	—	—	—
23:16	U-0	U-0	U-0	U-0	U-0	U-0	U-0	U-0
	—	—	—	—	—	—	—	—
15:8	U-0	U-0	U-0	U-0	U-0	U-0	U-0	U-0
	—	—	—	—	—	—	—	—
7:0	R/WC-0, HS	R/WC-0, HS	R/WC-0, HS	R/WC-0, HS	R/WC-0, HS	R/WC-0, HS	R/WC-0, HS	R/WC-0, HS
	BTSEF	BMXEF	DMAEF(1)	BTOEF(2)	DFN8EF	CRC16EF	CRC5EF(4) / EOFEF(3,5)	PIDEF

Legend:	WC = Write ‘1’ to clear	HS = Hardware Settable bit	
R = Readable bit	W = Writable bit	U = Unimplemented bit, read as ‘0’	
-n = Value at POR	‘1’ = Bit is set	‘0’ = Bit is cleared	x = Bit is unknown

bit 31-8 **Unimplemented:** Read as ‘0’

bit 7 **BTSEF:** Bit Stuff Error Flag bit
1 = Packet rejected due to bit stuff error
0 = Packet accepted

bit 6 **BMXEF:** Bus Matrix Error Flag bit
1 = The base address, of the BDT, or the address of an individual buffer pointed to by a BDT entry, is invalid.
0 = No address error

bit 5 **DMAEF:** DMA Error Flag bit(1)
1 = USB DMA error condition detected
0 = No DMA error

bit 4 **BTOEF:** Bus Turnaround Time-Out Error Flag bit(2)
1 = Bus turnaround time-out has occurred
0 = No bus turnaround time-out

bit 3 **DFN8EF:** Data Field Size Error Flag bit
1 = Data field received is not an integral number of bytes
0 = Data field received is an integral number of bytes

bit 2 **CRC16EF:** CRC16 Failure Flag bit
1 = Data packet rejected due to CRC16 error
0 = Data packet accepted

Note 1: This type of error occurs when the module’s request for the DMA bus is not granted in time to service the module’s demand for memory, resulting in an overflow or underflow condition, and/or the allocated buffer size is not sufficient to store the received data packet causing it to be truncated.

2: This type of error occurs when more than 16-bit-times of Idle from the previous End-of-Packet (EOP) has elapsed.

3: This type of error occurs when the module is transmitting or receiving data and the SOF counter has reached zero.

4: Device mode.

5: Host mode.

REGISTER 10-8: U1EIR: USB ERROR INTERRUPT STATUS REGISTER (CONTINUED)

bit 1 **CRC5EF:** CRC5 Host Error Flag bit(4)
- 1 = Token packet rejected due to CRC5 error
- 0 = Token packet accepted

EOFEF: EOF Error Flag bit(3,5)
- 1 = EOF error condition detected
- 0 = No EOF error condition

bit 0 **PIDEF:** PID Check Failure Flag bit
- 1 = PID check failed
- 0 = PID check passed

Note 1: This type of error occurs when the module's request for the DMA bus is not granted in time to service the module's demand for memory, resulting in an overflow or underflow condition, and/or the allocated buffer size is not sufficient to store the received data packet causing it to be truncated.

2: This type of error occurs when more than 16-bit-times of Idle from the previous End-of-Packet (EOP) has elapsed.

3: This type of error occurs when the module is transmitting or receiving data and the SOF counter has reached zero.

4: Device mode.

5: Host mode.

© 2014-2019 Microchip Technology Inc.

REGISTER 10-9: U1EIE: USB ERROR INTERRUPT ENABLE REGISTER

Bit Range	Bit 31/23/15/7	Bit 30/22/14/6	Bit 29/21/13/5	Bit 28/20/12/4	Bit 27/19/11/3	Bit 26/18/10/2	Bit 25/17/9/1	Bit 24/16/8/0
31:24	U-0	U-0	U-0	U-0	U-0	U-0	U-0	U-0
	—	—	—	—	—	—	—	—
23:16	U-0	U-0	U-0	U-0	U-0	U-0	U-0	U-0
	—	—	—	—	—	—	—	—
15:8	U-0	U-0	U-0	U-0	U-0	U-0	U-0	U-0
	—	—	—	—	—	—	—	—
7:0	R/W-0	R/W-0	R/W-0	R/W-0	R/W-0	R/W-0	R/W-0	R/W-0
	BTSEE	BMXEE	DMAEE	BTOEE	DFN8EE	CRC16EE	CRC5EE(1) / EOFEE(2)	PIDEE

Legend:			
R = Readable bit	W = Writable bit	U = Unimplemented bit, read as ‘0’	
-n = Value at POR	‘1’ = Bit is set	‘0’ = Bit is cleared	x = Bit is unknown

bit 31-8 **Unimplemented:** Read as ‘0’

bit 7 **BTSEE:** Bit Stuff Error Interrupt Enable bit
1 = BTSEF interrupt enabled
0 = BTSEF interrupt disabled

bit 6 **BMXEE:** Bus Matrix Error Interrupt Enable bit
1 = BMXEF interrupt enabled
0 = BMXEF interrupt disabled

bit 5 **DMAEE:** DMA Error Interrupt Enable bit
1 = DMAEF interrupt enabled
0 = DMAEF interrupt disabled

bit 4 **BTOEE:** Bus Turnaround Time-out Error Interrupt Enable bit
1 = BTOEF interrupt enabled
0 = BTOEF interrupt disabled

bit 3 **DFN8EE:** Data Field Size Error Interrupt Enable bit
1 = DFN8EF interrupt enabled
0 = DFN8EF interrupt disabled

bit 2 **CRC16EE:** CRC16 Failure Interrupt Enable bit
1 = CRC16EF interrupt enabled
0 = CRC16EF interrupt disabled

bit 1 **CRC5EE:** CRC5 Host Error Interrupt Enable bit(1)
1 = CRC5EF interrupt enabled
0 = CRC5EF interrupt disabled
EOFEE: EOF Error Interrupt Enable bit(2)
1 = EOF interrupt enabled
0 = EOF interrupt disabled

bit 0 **PIDEE:** PID Check Failure Interrupt Enable bit
1 = PIDEF interrupt enabled
0 = PIDEF interrupt disabled

Note 1: Device mode.
2: Host mode.

Note: For an interrupt to propagate USBIF, the UERRIE bit (U1IE<1>) must be set.

REGISTER 10-10: U1STAT: USB STATUS REGISTER

Bit Range	Bit 31/23/15/7	Bit 30/22/14/6	Bit 29/21/13/5	Bit 28/20/12/4	Bit 27/19/11/3	Bit 26/18/10/2	Bit 25/17/9/1	Bit 24/16/8/0
31:24	U-0	U-0	U-0	U-0	U-0	U-0	U-0	U-0
	—	—	—	—	—	—	—	—
23:16	U-0	U-0	U-0	U-0	U-0	U-0	U-0	U-0
	—	—	—	—	—	—	—	—
15:8	U-0	U-0	U-0	U-0	U-0	U-0	U-0	U-0
	—	—	—	—	—	—	—	—
7:0	R-x	R-x	R-x	R-x	R-x	R-x	U-0	U-0
	ENDPT<3:0>				DIR	PPBI	—	—

Legend:			
R = Readable bit	W = Writable bit	U = Unimplemented bit, read as ‘0’	
-n = Value at POR	‘1’ = Bit is set	‘0’ = Bit is cleared	x = Bit is unknown

bit 31-8 **Unimplemented:** Read as ‘0’

bit 7-4 **ENDPT<3:0>:** Encoded Number of Last Endpoint Activity bits
(Represents the number of the BDT, updated by the last USB transfer.)

1111 = Endpoint 15
1110 = Endpoint 14
•
•
•
0001 = Endpoint 1
0000 = Endpoint 0

bit 3 **DIR:** Last BD Direction Indicator bit

1 = Last transaction was a transmit transfer (TX)
0 = Last transaction was a receive transfer (RX)

bit 2 **PPBI:** Ping-Pong BD Pointer Indicator bit

1 = The last transaction was to the ODD BD bank
0 = The last transaction was to the EVEN BD bank

bit 1-0 **Unimplemented:** Read as ‘0’

Note: The U1STAT register is a window into a 4-byte FIFO maintained by the USB module. U1STAT value is only valid when the TRNIF bit (U1IR<3>) is active. Clearing the TRNIF bit advances the FIFO. Data in register is invalid when the TRNIF bit = 0.

© 2014-2019 Microchip Technology Inc.

REGISTER 10-11: U1CON: USB CONTROL REGISTER

Bit Range	Bit 31/23/15/7	Bit 30/22/14/6	Bit 29/21/13/5	Bit 28/20/12/4	Bit 27/19/11/3	Bit 26/18/10/2	Bit 25/17/9/1	Bit 24/16/8/0
31:24	U-0	U-0	U-0	U-0	U-0	U-0	U-0	U-0
	—	—	—	—	—	—	—	—
23:16	U-0	U-0	U-0	U-0	U-0	U-0	U-0	U-0
	—	—	—	—	—	—	—	—
15:8	U-0	U-0	U-0	U-0	U-0	U-0	U-0	U-0
	—	—	—	—	—	—	—	—
7:0	R-x	R-x	R/W-0	R/W-0	R/W-0	R/W-0	R/W-0	R/W-0
	JSTATE	SE0	PKTDIS(4) TOKBUSY(1,5)	USBRST	HOSTEN(2)	RESUME(3)	PPBRST	USBEN(4) SOFEN(5)

Legend:			
R = Readable bit	W = Writable bit	U = Unimplemented bit, read as ‘0’	
-n = Value at POR	‘1’ = Bit is set	‘0’ = Bit is cleared	x = Bit is unknown

bit 31-8 **Unimplemented:** Read as ‘0’

bit 7 **JSTATE:** Live Differential Receiver JSTATE flag bit
1 = JSTATE detected on the USB
0 = No JSTATE detected

bit 6 **SE0:** Live Single-Ended Zero flag bit
1 = Single Ended Zero detected on the USB
0 = No Single Ended Zero detected

bit 5 **PKTDIS:** Packet Transfer Disable bit(4)
1 = Token and packet processing disabled (set upon SETUP token received)
0 = Token and packet processing enabled
TOKBUSY: Token Busy Indicator bit(1,5)
1 = Token being executed by the USB module
0 = No token being executed

bit 4 **USBRST:** Module Reset bit(5)
1 = USB reset generated
0 = USB reset terminated

bit 3 **HOSTEN:** Host Mode Enable bit(2)
1 = USB host capability enabled
0 = USB host capability disabled

bit 2 **RESUME:** RESUME Signaling Enable bit(3)
1 = RESUME signaling activated
0 = RESUME signaling disabled

Note 1: Software is required to check this bit before issuing another token command to the U1TOK register (see Register 10-15).
2: All host control logic is reset any time that the value of this bit is toggled.
3: Software must set the RESUME bit for 10 ms if the part is a function, or for 25 ms if the part is a host, and then clear it to enable remote wake-up. In Host mode, the USB module will append a low-speed EOP to the RESUME signaling when this bit is cleared.
4: Device mode.
5: Host mode.

REGISTER 10-11: U1CON: USB CONTROL REGISTER (CONTINUED)

bit 1 **PPBRST:** Ping-Pong Buffers Reset bit
1 = Reset all Even/Odd buffer pointers to the EVEN BD banks
0 = Even/Odd buffer pointers not being Reset

bit 0 **USBEN:** USB Module Enable bit(4)
1 = USB module and supporting circuitry enabled
0 = USB module and supporting circuitry disabled

SOFEN: SOF Enable bit(5)
1 = SOF token sent every 1 ms
0 = SOF token disabled

Note 1: Software is required to check this bit before issuing another token command to the U1TOK register (see Register 10-15).

2: All host control logic is reset any time that the value of this bit is toggled.

3: Software must set the RESUME bit for 10 ms if the part is a function, or for 25 ms if the part is a host, and then clear it to enable remote wake-up. In Host mode, the USB module will append a low-speed EOP to the RESUME signaling when this bit is cleared.

4: Device mode.

5: Host mode.

© 2014-2019 Microchip Technology Inc.

REGISTER 10-12: U1ADDR: USB ADDRESS REGISTER

Bit Range	Bit 31/23/15/7	Bit 30/22/14/6	Bit 29/21/13/5	Bit 28/20/12/4	Bit 27/19/11/3	Bit 26/18/10/2	Bit 25/17/9/1	Bit 24/16/8/0
31:24	U-0	U-0	U-0	U-0	U-0	U-0	U-0	U-0
	—	—	—	—	—	—	—	—
23:16	U-0	U-0	U-0	U-0	U-0	U-0	U-0	U-0
	—	—	—	—	—	—	—	—
15:8	U-0	U-0	U-0	U-0	U-0	U-0	U-0	U-0
	—	—	—	—	—	—	—	—
7:0	R/W-0	R/W-0	R/W-0	R/W-0	R/W-0	R/W-0	R/W-0	R/W-0
	LSPDEN	DEVADDR<6:0>						

Legend:			
R = Readable bit	W = Writable bit	U = Unimplemented bit, read as ‘0’	
-n = Value at POR	‘1’ = Bit is set	‘0’ = Bit is cleared	x = Bit is unknown

bit 31-8 **Unimplemented:** Read as ‘0’

bit 7 **LSPDEN:** Low Speed Enable Indicator bit
1 = Next token command to be executed at Low Speed
0 = Next token command to be executed at Full Speed

bit 6-0 **DEVADDR<6:0>:** 7-bit USB Device Address bits

REGISTER 10-13: U1FRML: USB FRAME NUMBER LOW REGISTER

Bit Range	Bit 31/23/15/7	Bit 30/22/14/6	Bit 29/21/13/5	Bit 28/20/12/4	Bit 27/19/11/3	Bit 26/18/10/2	Bit 25/17/9/1	Bit 24/16/8/0
31:24	U-0	U-0	U-0	U-0	U-0	U-0	U-0	U-0
	—	—	—	—	—	—	—	—
23:16	U-0	U-0	U-0	U-0	U-0	U-0	U-0	U-0
	—	—	—	—	—	—	—	—
15:8	U-0	U-0	U-0	U-0	U-0	U-0	U-0	U-0
	—	—	—	—	—	—	—	—
7:0	R-0	R-0	R-0	R-0	R-0	R-0	R-0	R-0
	FRML<7:0>							

Legend:			
R = Readable bit	W = Writable bit	U = Unimplemented bit, read as ‘0’	
-n = Value at POR	‘1’ = Bit is set	‘0’ = Bit is cleared	x = Bit is unknown

bit 31-8 **Unimplemented:** Read as ‘0’

bit 7-0 **FRML<7:0>:** The 11-bit Frame Number Lower bits
The register bits are updated with the current frame number whenever a SOF TOKEN is received.

REGISTER 10-14: U1FRMH: USB FRAME NUMBER HIGH REGISTER

Bit Range	Bit 31/23/15/7	Bit 30/22/14/6	Bit 29/21/13/5	Bit 28/20/12/4	Bit 27/19/11/3	Bit 26/18/10/2	Bit 25/17/9/1	Bit 24/16/8/0
31:24	U-0	U-0	U-0	U-0	U-0	U-0	U-0	U-0
	—	—	—	—	—	—	—	—
23:16	U-0	U-0	U-0	U-0	U-0	U-0	U-0	U-0
	—	—	—	—	—	—	—	—
15:8	U-0	U-0	U-0	U-0	U-0	U-0	U-0	U-0
	—	—	—	—	—	—	—	—
7:0	U-0	U-0	U-0	U-0	U-0	R-0	R-0	R-0
	—	—	—	—	—	FRMH<2:0>		

Legend:			
R = Readable bit	W = Writable bit	U = Unimplemented bit, read as ‘0’	
-n = Value at POR	‘1’ = Bit is set	‘0’ = Bit is cleared	x = Bit is unknown

bit 31-3 **Unimplemented:** Read as ‘0’

bit 2-0 **FRMH<2:0>:** The Upper 3 bits of the Frame Numbers bits
The register bits are updated with the current frame number whenever a SOF TOKEN is received.

REGISTER 10-15: U1TOK: USB TOKEN REGISTER

Bit Range	Bit 31/23/15/7	Bit 30/22/14/6	Bit 29/21/13/5	Bit 28/20/12/4	Bit 27/19/11/3	Bit 26/18/10/2	Bit 25/17/9/1	Bit 24/16/8/0
31:24	U-0	U-0	U-0	U-0	U-0	U-0	U-0	U-0
	—	—	—	—	—	—	—	—
23:16	U-0	U-0	U-0	U-0	U-0	U-0	U-0	U-0
	—	—	—	—	—	—	—	—
15:8	U-0	U-0	U-0	U-0	U-0	U-0	U-0	U-0
	—	—	—	—	—	—	—	—
7:0	R/W-0	R/W-0	R/W-0	R/W-0	R/W-0	R/W-0	R/W-0	R/W-0
	PID<3:0>(1)				EP<3:0>			

Legend:			
R = Readable bit	W = Writable bit	U = Unimplemented bit, read as ‘0’	
-n = Value at POR	‘1’ = Bit is set	‘0’ = Bit is cleared	x = Bit is unknown

bit 31-8 **Unimplemented:** Read as ‘0’

bit 7-4 **PID<3:0>:** Token Type Indicator bits(1)
0001 = OUT (TX) token type transaction
1001 = IN (RX) token type transaction
1101 = SETUP (TX) token type transaction
Note: All other values are reserved and must not be used.

bit 3-0 **EP<3:0>:** Token Command Endpoint Address bits
The four bit value must specify a valid endpoint.

Note 1: All other values are reserved and must not be used.

© 2014-2019 Microchip Technology Inc.

REGISTER 10-16: U1SOF: USB SOF THRESHOLD REGISTER

Bit Range	Bit 31/23/15/7	Bit 30/22/14/6	Bit 29/21/13/5	Bit 28/20/12/4	Bit 27/19/11/3	Bit 26/18/10/2	Bit 25/17/9/1	Bit 24/16/8/0
31:24	U-0	U-0	U-0	U-0	U-0	U-0	U-0	U-0
	—	—	—	—	—	—	—	—
23:16	U-0	U-0	U-0	U-0	U-0	U-0	U-0	U-0
	—	—	—	—	—	—	—	—
15:8	U-0	U-0	U-0	U-0	U-0	U-0	U-0	U-0
	—	—	—	—	—	—	—	—
7:0	R/W-0	R/W-0	R/W-0	R/W-0	R/W-0	R/W-0	R/W-0	R/W-0
	CNT<7:0>							

Legend:			
R = Readable bit	W = Writable bit	U = Unimplemented bit, read as ‘0’	
-n = Value at POR	‘1’ = Bit is set	‘0’ = Bit is cleared	x = Bit is unknown

bit 31-8 **Unimplemented:** Read as ‘0’

bit 7-0 **CNT<7:0>:** SOF Threshold Value bits

Typical values of the threshold are:
01001010 = 64-byte packet
00101010 = 32-byte packet
00011010 =16-byte packet
00010010 =8-byte packet

REGISTER 10-17: U1BDTP1: USB BDT PAGE 1 REGISTER

Bit Range	Bit 31/23/15/7	Bit 30/22/14/6	Bit 29/21/13/5	Bit 28/20/12/4	Bit 27/19/11/3	Bit 26/18/10/2	Bit 25/17/9/1	Bit 24/16/8/0
31:24	U-0	U-0	U-0	U-0	U-0	U-0	U-0	U-0
	—	—	—	—	—	—	—	—
23:16	U-0	U-0	U-0	U-0	U-0	U-0	U-0	U-0
	—	—	—	—	—	—	—	—
15:8	U-0	U-0	U-0	U-0	U-0	U-0	U-0	U-0
	—	—	—	—	—	—	—	—
7:0	R/W-0	R/W-0	R/W-0	R/W-0	R/W-0	R/W-0	R/W-0	U-0
	BDTPTRL<15:9>							—

Legend:			
R = Readable bit	W = Writable bit	U = Unimplemented bit, read as ‘0’	
-n = Value at POR	‘1’ = Bit is set	‘0’ = Bit is cleared	x = Bit is unknown

bit 31-8 **Unimplemented:** Read as ‘0’

bit 7-1 **BDTPTRL<15:9>:** BDT Base Address bits

This 7-bit value provides address bits 15 through 9 of the BDT base address, which defines the starting location of the BDT in system memory.

The 32-bit BDT base address is 512-byte aligned.

bit 0 **Unimplemented:** Read as ‘0’

REGISTER 10-18: U1BDTP2: USB BDT PAGE 2 REGISTER

Bit Range	Bit 31/23/15/7	Bit 30/22/14/6	Bit 29/21/13/5	Bit 28/20/12/4	Bit 27/19/11/3	Bit 26/18/10/2	Bit 25/17/9/1	Bit 24/16/8/0
31:24	U-0	U-0	U-0	U-0	U-0	U-0	U-0	U-0
	—	—	—	—	—	—	—	—
23:16	U-0	U-0	U-0	U-0	U-0	U-0	U-0	U-0
	—	—	—	—	—	—	—	—
15:8	U-0	U-0	U-0	U-0	U-0	U-0	U-0	U-0
	—	—	—	—	—	—	—	—
7:0	R/W-0	R/W-0	R/W-0	R/W-0	R/W-0	R/W-0	R/W-0	R/W-0
	BDTPTRH<23:16>							

Legend:			
R = Readable bit	W = Writable bit	U = Unimplemented bit, read as ‘0’	
-n = Value at POR	‘1’ = Bit is set	‘0’ = Bit is cleared	x = Bit is unknown

bit 31-8 **Unimplemented:** Read as ‘0’

bit 7-0 **BDTPTRH<23:16>:** BDT Base Address bits

This 8-bit value provides address bits 23 through 16 of the BDT base address, which defines the starting location of the BDT in system memory.

The 32-bit BDT base address is 512-byte aligned.

REGISTER 10-19: U1BDTP3: USB BDT PAGE 3 REGISTER

Bit Range	Bit 31/23/15/7	Bit 30/22/14/6	Bit 29/21/13/5	Bit 28/20/12/4	Bit 27/19/11/3	Bit 26/18/10/2	Bit 25/17/9/1	Bit 24/16/8/0
31:24	U-0	U-0	U-0	U-0	U-0	U-0	U-0	U-0
	—	—	—	—	—	—	—	—
23:16	U-0	U-0	U-0	U-0	U-0	U-0	U-0	U-0
	—	—	—	—	—	—	—	—
15:8	U-0	U-0	U-0	U-0	U-0	U-0	U-0	U-0
	—	—	—	—	—	—	—	—
7:0	R/W-0	R/W-0	R/W-0	R/W-0	R/W-0	R/W-0	R/W-0	R/W-0
	BDTPTRU<31:24>							

Legend:			
R = Readable bit	W = Writable bit	U = Unimplemented bit, read as ‘0’	
-n = Value at POR	‘1’ = Bit is set	‘0’ = Bit is cleared	x = Bit is unknown

bit 31-8 **Unimplemented:** Read as ‘0’

bit 7-0 **BDTPTRU<31:24>:** BDT Base Address bits

This 8-bit value provides address bits 31 through 24 of the BDT base address, defines the starting location of the BDT in system memory.

The 32-bit BDT base address is 512-byte aligned.

© 2014-2019 Microchip Technology Inc.

REGISTER 10-20: U1CNFG1: USB CONFIGURATION 1 REGISTER

Bit Range	Bit 31/23/15/7	Bit 30/22/14/6	Bit 29/21/13/5	Bit 28/20/12/4	Bit 27/19/11/3	Bit 26/18/10/2	Bit 25/17/9/1	Bit 24/16/8/0
31:24	U-0	U-0	U-0	U-0	U-0	U-0	U-0	U-0
	—	—	—	—	—	—	—	—
23:16	U-0	U-0	U-0	U-0	U-0	U-0	U-0	U-0
	—	—	—	—	—	—	—	—
15:8	U-0	U-0	U-0	U-0	U-0	U-0	U-0	U-0
	—	—	—	—	—	—	—	—
7:0	R/W-0	U-0	U-0	R/W-0	R/W-0	U-0	U-0	R/W-0
	UTEYE	—	—	USBSIDL	USBSIDL	—	—	UASUSPND

Legend:			
R = Readable bit	W = Writable bit	U = Unimplemented bit, read as ‘0’	
-n = Value at POR	‘1’ = Bit is set	‘0’ = Bit is cleared	x = Bit is unknown

bit 31-8 **Unimplemented:** Read as ‘0’

bit 7 **UTEYE:** USB Eye-Pattern Test Enable bit
1 = Eye-Pattern Test enabled
0 = Eye-Pattern Test disabled

bit 6-5 **Unimplemented:** Read as ‘0’

bit 4 **USBSIDL:** Stop in Idle Mode bit
1 = Discontinue module operation when device enters Idle mode
0 = Continue module operation in Idle mode

bit 3 **LSDEV:** Low-Speed Device Enable bit
1 = USB module operates in Low-Speed Device mode only
0 = USB module operates in OTG, Host, or Full-Speed Device mode

bit 2-1 **Unimplemented:** Read as ‘0’

bit 0 **UASUSPND:** Automatic Suspend Enable bit
1 = USB module automatically suspends upon entry to Sleep mode. See the USUSPEND bit (U1PWRC<1>) in Register 10-5.
0 = USB module does not automatically suspend upon entry to Sleep mode. Software must use the USUSPEND bit (U1PWRC<1>) to suspend the module, including the USB 48 MHz clock

REGISTER 10-21: U1EP0-U1EP15: USB ENDPOINT CONTROL REGISTER

Bit Range	Bit 31/23/15/7	Bit 30/22/14/6	Bit 29/21/13/5	Bit 28/20/12/4	Bit 27/19/11/3	Bit 26/18/10/2	Bit 25/17/9/1	Bit 24/16/8/0
31:24	U-0	U-0	U-0	U-0	U-0	U-0	U-0	U-0
	—	—	—	—	—	—	—	—
23:16	U-0	U-0	U-0	U-0	U-0	U-0	U-0	U-0
	—	—	—	—	—	—	—	—
15:8	U-0	U-0	U-0	U-0	U-0	U-0	U-0	U-0
	—	—	—	—	—	—	—	—
7:0	R/W-0	R/W-0	U-0	R/W-0	R/W-0	R/W-0	R/W-0	R/W-0
	LSPD	RETRYDIS	—	EPCONDIS	EPRXEN	EPTXEN	EPSTALL	EPHSHK

Legend:			
R = Readable bit	W = Writable bit	U = Unimplemented bit, read as ‘0’	
-n = Value at POR	‘1’ = Bit is set	‘0’ = Bit is cleared	x = Bit is unknown

bit 31-8 **Unimplemented:** Read as ‘0’

bit 7 **LSPD:** Low-Speed Direct Connection Enable bit (Host mode and U1EP0 only)
1 = Direct connection to a low-speed device enabled
0 = Direct connection to a low-speed device disabled; hub required with PRE_PID

bit 6 **RETRYDIS:** Retry Disable bit (Host mode and U1EP0 only)
1 = Retry NAKed transactions disabled
0 = Retry NAKed transactions enabled; retry done in hardware

bit 5 **Unimplemented:** Read as ‘0’

bit 4 **EPCONDIS:** Bidirectional Endpoint Control bit
If EPTXEN = 1 and EPRXEN = 1:
1 = Disable Endpoint n from Control transfers; only TX and RX transfers allowed
0 = Enable Endpoint n for Control (SETUP) transfers; TX and RX transfers also allowed
Otherwise, this bit is ignored.

bit 3 **EPRXEN:** Endpoint Receive Enable bit
1 = Endpoint n receive enabled
0 = Endpoint n receive disabled

bit 2 **EPTXEN:** Endpoint Transmit Enable bit
1 = Endpoint n transmit enabled
0 = Endpoint n transmit disabled

bit 1 **EPSTALL:** Endpoint Stall Status bit
1 = Endpoint n was stalled
0 = Endpoint n was not stalled

bit 0 **EPHSHK:** Endpoint Handshake Enable bit
1 = Endpoint Handshake enabled
0 = Endpoint Handshake disabled (typically used for isochronous endpoints)

© 2014-2019 Microchip Technology Inc.

11.0 I/O PORTS

Note: This data sheet summarizes the features of the PIC32MX1XX/2XX/5XX 64/100-pin family of devices. It is not intended to be a comprehensive reference source. To complement the information in this data sheet, refer to **Section 12. "I/O Ports"** (DS60001120) in the *"PIC32 Family Reference Manual"*, which is available from the Microchip web site (www.microchip.com/PIC32).

General purpose I/O pins are the simplest of peripherals. They allow the PIC® MCU to monitor and control other devices. To add flexibility and functionality, some pins are multiplexed with alternate functions. These functions depend on which peripheral features are on the device. In general, when a peripheral is functioning, that pin may not be used as a general purpose I/O pin.

The following are the key features of this module:

- Individual output pin open-drain enable or disable
- Individual input pin weak pull-up and pull-down
- Monitor selective inputs and generate interrupt when change in pin state is detected
- Operation during CPU Sleep and Idle modes
- Fast bit manipulation using CLR, SET and INV registers

Figure 11-1 illustrates a block diagram of a typical multiplexed I/O port.

FIGURE 11-1: BLOCK DIAGRAM OF A TYPICAL MULTIPLEXED PORT STRUCTURE

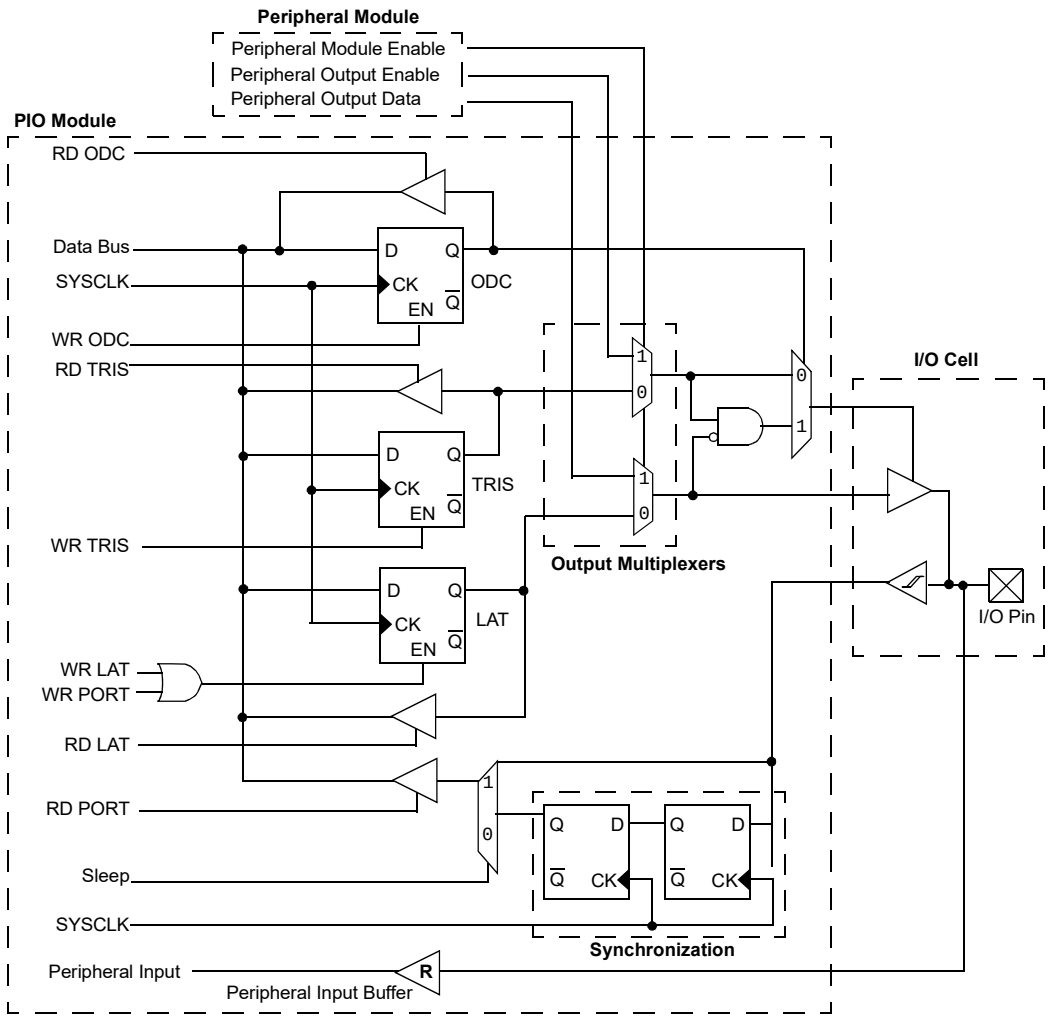

Legend: R = Peripheral input buffer types may vary. Refer to Table 1-1 for peripheral details.

Note: This block diagram is a general representation of a shared port/peripheral structure for illustration purposes only. The actual structure for any specific port/peripheral combination may be different than shown here.

11.1 Parallel I/O (PIO) Ports

All port pins have ten registers directly associated with their operation as digital I/O. The data direction register (TRISx) determines whether the pin is an input or an output. If the data direction bit is a '1', then the pin is an input. All port pins are defined as inputs after a Reset. Reads from the latch (LATx) read the latch. Writes to the latch write the latch. Reads from the port (PORTx) read the port pins, while writes to the port pins write the latch.

11.1.1 OPEN-DRAIN CONFIGURATION

In addition to the PORTx, LATx, and TRISx registers for data control, some port pins can also be individually configured for either digital or open-drain output. This is controlled by the Open-Drain Control register, ODCx, associated with each port. Setting any of the bits configures the corresponding pin, regardless of the output function including PPS remapped output functions to act as an open-drain output. The only exception is the I^2C pins that are open drain by default.

The open-drain feature allows the presence of outputs higher than VDD (e.g., 5V) on any desired 5V-tolerant pins by using external pull-up resistors. The maximum open-drain voltage allowed is the same as the maximum VIH specification.

See the **"Device Pin Tables"** section for the available pins and their functionality.

11.1.2 CONFIGURING ANALOG AND DIGITAL PORT PINS

The ANSELx register controls the operation of the analog port pins. The port pins that are to function as analog inputs must have their corresponding ANSEL and TRIS bits set. In order to use port pins for I/O functionality with digital modules, such as Timers, UARTs, etc., the corresponding ANSELx bit must be cleared.

The ANSELx register has a default value of 0xFFFF; therefore, all pins that share analog functions are analog (not digital) by default. The ANSELx register bit, when cleared, disables the corresponding digital input buffer pin(s).

If the TRIS bit is cleared (output) while the ANSELx bit is set, the digital output level (VOH or VOL) is converted by an analog peripheral, such as the ADC module or Comparator module. The TRISx bits only control the corresponding digital output buffer pin(s).

When the PORT register is read, all pins configured as analog input channels are read as cleared (a low level; i.e., when ANSELx = 1; TRISx = x).

Analog levels on any pin defined as a digital input (including the ANx pins) can cause the input buffer to consume current that exceeds the device specifications.

11.1.3 I/O PORT WRITE/READ TIMING

One instruction cycle is required between a port direction change or port write operation and a read operation of the same port. Typically, this instruction would be an NOP.

11.1.4 INPUT CHANGE NOTIFICATION

The input Change Notification (CN) function of the I/O ports allows the PIC32MX1XX/2XX/5XX 64/100-pin devices to generate interrupt requests to the processor in response to a change-of-state on selected input pins. This feature can detect input change-of-states even in Sleep mode, when the clocks are disabled. Every I/O port pin can be selected (enabled) for generating an interrupt request on a change-of-state.

Five control registers are associated with the CN functionality of each I/O port. The CNENx registers contain the CN interrupt enable control bits for each of the input pins. Setting any of these bits enables a CN interrupt for the corresponding pins.

The CNSTATx register indicates whether a change occurred on the corresponding pin since the last read of the PORTx bit.

11.1.5 INTERNALLY SELECTABLE PULL-UPS AND PULL-DOWNS

Each I/O pin also has a weak pull-up and every I/O pin has a weak pull-down connected to it, which are independent of any other I/O pin functionality (i.e., PPS, Open Drain, or CN). The pull-ups act as a current source or sink source connected to the pin, and eliminate the need for external resistors when push-button or keypad devices are connected. The pull-ups and pull-downs are enabled separately using the CNPUx and the CNPDx registers, which contain the control bits for each of the pins. Setting any of the control bits enables the weak pull-ups and/or pull-downs for the corresponding pins.

Note:	Pull-ups and pull-downs on change notification pins should always be disabled when the port pin is configured as a digital output. They should also be disabled on 5V tolerant pins when the pin voltage can exceed VDD.

An additional control register (CNCONx) is shown in Register 11-3.

11.2 CLR, SET, and INV Registers

Every I/O module register has a corresponding CLR (clear), SET (set) and INV (invert) register designed to provide fast atomic bit manipulations. As the name of the register implies, a value written to a SET, CLR or INV register effectively performs the implied operation, but only on the corresponding base register and only bits specified as '1' are modified. Bits specified as '0' are not modified.

Reading SET, CLR and INV registers returns undefined values. To see the affects of a write operation to a SET, CLR or INV register, the base register must be read.

© 2014-2019 Microchip Technology Inc.

11.3 Peripheral Pin Select

A major challenge in general purpose devices is providing the largest possible set of peripheral features while minimizing the conflict of features on I/O pins. The challenge is even greater on low pin count devices. In an application where more than one peripheral needs to be assigned to a single pin, inconvenient workarounds in application code or a complete redesign may be the only options.

Peripheral pin select configuration provides an alternative to these choices by enabling peripheral set selection and their placement on a wide range of I/O pins. By increasing the pinout options available on a particular device, users can better tailor the device to their entire application, rather than trimming the application to fit the device.

The peripheral pin select configuration feature operates over a fixed subset of digital I/O pins. Users may independently map the input and/or output of most digital peripherals to these I/O pins. Peripheral pin select is performed in software and generally does not require the device to be reprogrammed. Hardware safeguards are included that prevent accidental or spurious changes to the peripheral mapping once it has been established.

11.3.1 AVAILABLE PINS

The number of available pins is dependent on the particular device and its pin count. Pins that support the peripheral pin select feature include the designation “RPn” in their full pin designation, where “RP” designates a remappable peripheral and “n” is the remappable port number.

11.3.2 AVAILABLE PERIPHERALS

The peripherals managed by the peripheral pin select are all digital-only peripherals. These include general serial communications (UART and SPI), general purpose timer clock inputs, timer-related peripherals (input capture and output compare) and interrupt-on-change inputs.

In comparison, some digital-only peripheral modules are never included in the peripheral pin select feature. This is because the peripheral’s function requires special I/O circuitry on a specific port and cannot be easily connected to multiple pins. These modules include I^2C among others. A similar requirement excludes all modules with analog inputs, such as the Analog-to-Digital Converter (ADC).

A key difference between remappable and non-remappable peripherals is that remappable peripherals are not associated with a default I/O pin. The peripheral must always be assigned to a specific I/O pin before it can be used. In contrast, non-remappable peripherals are always available on a default pin, assuming that the peripheral is active and not conflicting with another peripheral.

When a remappable peripheral is active on a given I/O pin, it takes priority over all other digital I/O and digital communication peripherals associated with the pin. Priority is given regardless of the type of peripheral that is mapped. Remappable peripherals never take priority over any analog functions associated with the pin.

11.3.3 CONTROLLING PERIPHERAL PIN SELECT

Peripheral pin select features are controlled through two sets of SFRs: one to map peripheral inputs, and one to map outputs. Because they are separately controlled, a particular peripheral’s input and output (if the peripheral has both) can be placed on any selectable function pin without constraint.

The association of a peripheral to a peripheral-selectable pin is handled in two different ways, depending on whether an input or output is being mapped.

11.3.4 INPUT MAPPING

The inputs of the peripheral pin select options are mapped on the basis of the peripheral. That is, a control register associated with a peripheral dictates the pin it will be mapped to. The [*pin name*]R registers, where [*pin name*] refers to the peripheral pins listed in Table 11-1, are used to configure peripheral input mapping (see Register 11-1). Each register contains sets of 4 bit fields. Programming these bit fields with an appropriate value maps the RPn pin with the corresponding value to that peripheral. For any given device, the valid range of values for any bit field is shown in Table 11-1.

For example, Figure 11-2 illustrates the remappable pin selection for the U1RX input.

FIGURE 11-2: REMAPPABLE INPUT EXAMPLE FOR U1RX

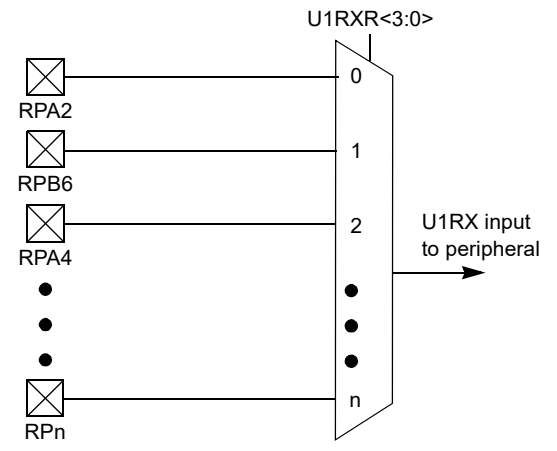

Note: For input only, peripheral pin select functionality does not have priority over TRISx settings. Therefore, when configuring RPn pin for input, the corresponding bit in the TRISx register must also be configured for input (set to ‘1’).

TABLE 11-1: INPUT PIN SELECTION

Peripheral Pin	[*pin name*]R SFR	[*pin name*]R bits	[*pin name*]R Value to RPn Pin Selection
INT3	INT3R	INT3R<3:0>	0000 = RPD2 0001 = RPG8 0010 = RPF4 0011 = RPD10 0100 = RPF1 0101 = RPB9 0110 = RPB10 0111 = RPC14 1000 = RPB5(7) 1001 = Reserved 1010 = RPC1(3) 1011 = RPD14(3) 1100 = RPG1(3) 1101 = RPA14(3) 1110 = Reserved 1111 = RPF2(1)
T2CK	T2CKR	T2CKR<3:0>	
IC3	IC3R	IC3R<3:0>	
U1RX	U1RXR	U1RXR<3:0>	
U2RX	U2RXR	U2RXR<3:0>	
$\overline{\text{U5CTS}}$(3)	U5CTSR	U5CTSR<3:0>	
SDI3	SDI3R	SDI3R<3:0>	
SDI4(3)	SDI4R	SDI4R<3:0>	
REFCLKI	REFCLKIR	REFCLKIR<3:0>	
INT4	INT4R	INT4R<3:0>	0000 = RPD3 0001 = RPG7 0010 = RPF5 0011 = RPD11 0100 = RPF0 0101 = RPB1 0110 = RPE5 0111 = RPC13 1000 = RPB3 1001 = RPF12(3) 1010 = RPC4(3) 1011 = RPD15(3) 1100 = RPG0(3) 1101 = RPA15(3) 1110 = RPF2(1) 1111 = RPF7(2)
T5CK	T5CKR	T5CKR<3:0>	
IC4	IC4R	IC4R<3:0>	
U3RX	U3RXR	U3RXR<3:0>	
$\overline{\text{U4CTS}}$	U4CTSR	U4CTSR<3:0>	
SDI1	SDI1R	SDI1R<3:0>	
SDI2	SDI2R	SDI2R<3:0>	
C1RX(5)	C1RXR(5)	C1RXR<3:0>(5)	
INT2	INT2R	INT2R<3:0>	0000 = RPD9 0001 = RPG6 0010 = RPB8 0011 = RPB15 0100 = RPD4 0101 = RPB0 0110 = RPE3 0111 = RPB7 1000 = Reserved 1001 = RPF12(3) 1010 = RPD12(3) 1011 = RPF8(3) 1100 = RPC3(3) 1101 = RPE9(3) 1110 = RPD14(3) 1111 = RPB2
T4CK	T4CKR	T4CKR<3:0>	
IC2	IC2R	IC2R<3:0>	
IC5	IC5R	IC5R<3:0>	
$\overline{\text{U1CTS}}$	U1CTSR	U1CTSR<3:0>	
$\overline{\text{U2CTS}}$	U2CTSR	U2CTSR<3:0>	
$\overline{\text{SS1}}$	SS1R	SS1R<3:0>	
$\overline{\text{SS3}}$	SS3R	SS1R<3:0>	
$\overline{\text{SS4}}$(3)	SS3R	SS3R<3:0>	

Note 1: This selection is not available on 64-pin USB devices.
2: This selection is only available on 100-pin General Purpose devices.
3: This selection is not available on 64-pin devices.
4: This selection is not available when USBID functionality is used on USB devices.
5: This selection is not available on devices without a CAN module.
6: This selection is not available on USB devices.
7: This selection is not available when VBUSON functionality is used on USB devices.

© 2014-2019 Microchip Technology Inc.

TABLE 11-1: INPUT PIN SELECTION (CONTINUED)

Peripheral Pin	[*pin name*]R SFR	[*pin name*]R bits	[*pin name*]R Value to RPn Pin Selection
INT1	INT1R	INT1R<3:0>	0000 = RPD1 0001 = RPG9 0010 = RPB14 0011 = RPD0 0100 = RPD8 0101 = RPB6 0110 = RPD5 0111 = RPB2 1000 = RPF3(4) 1001 = RPF13(3) 1010 = Reserved 1011 = RPF2(1) 1100 = RPC2(3) 1101 = RPE8(3) 1110 = Reserved 1111 = Reserved
T3CK	T3CKR	T3CKR<3:0>	
IC1	IC1R	IC1R<3:0>	
$\overline{\text{U3CTS}}$	U3CTSR	U3CTSR<3:0>	
U4RX	U4RXR	U4RXR<3:0>	
U5RX	U5RXR	U5RXR<3:0>	
$\overline{\text{SS2}}$	SS2R	SS2R<3:0>	
OCFA	OCFAR	OCFAR<3:0>	

Note 1: This selection is not available on 64-pin USB devices.
2: This selection is only available on 100-pin General Purpose devices.
3: This selection is not available on 64-pin devices.
4: This selection is not available when USBID functionality is used on USB devices.
5: This selection is not available on devices without a CAN module.
6: This selection is not available on USB devices.
7: This selection is not available when VBUSON functionality is used on USB devices.

11.3.5 OUTPUT MAPPING

In contrast to inputs, the outputs of the peripheral pin select options are mapped on the basis of the pin. In this case, a control register associated with a particular pin dictates the peripheral output to be mapped. The RPnR registers (Register 11-2) are used to control output mapping. Like the [*pin name*]R registers, each register contains sets of 4 bit fields. The value of the bit field corresponds to one of the peripherals, and that peripheral's output is mapped to the pin (see Table 11-2 and Figure 11-3).

A null output is associated with the output register reset value of '0'. This is done to ensure that remappable outputs remain disconnected from all output pins by default.

FIGURE 11-3: EXAMPLE OF MULTIPLEXING OF REMAPPABLE OUTPUT FOR RPA0

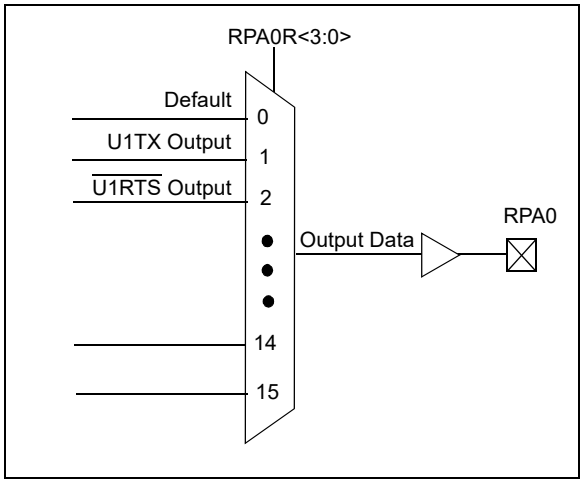

11.3.6 CONTROLLING CONFIGURATION CHANGES

Because peripheral remapping can be changed during run time, some restrictions on peripheral remapping are needed to prevent accidental configuration changes. PIC32 devices include two features to prevent alterations to the peripheral map:

- Control register lock sequence
- Configuration bit select lock

11.3.6.1 Control Register Lock

Under normal operation, writes to the RPnR and [*pin name*]R registers are not allowed. Attempted writes appear to execute normally, but the contents of the registers remain unchanged. To change these registers, they must be unlocked in hardware. The register lock is controlled by the IOLOCK Configuration bit (CFGCON<13>). Setting IOLOCK prevents writes to the control registers; clearing IOLOCK allows writes.

To set or clear the IOLOCK bit, an unlock sequence must be executed. Refer to **Section 6. "Oscillator"** (DS60001112) in the *"PIC32 Family Reference Manual"* for details.

11.3.6.2 Configuration Bit Select Lock

As an additional level of safety, the device can be configured to prevent more than one write session to the RPnR and [*pin name*]R registers. The IOL1WAY Configuration bit (DEVCFG3<29>) blocks the IOLOCK bit from being cleared after it has been set once. If IOLOCK remains set, the register unlock procedure does not execute, and the peripheral pin select control registers cannot be written to. The only way to clear the bit and re-enable peripheral remapping is to perform a device Reset.

In the default (unprogrammed) state, IOL1WAY is set, restricting users to one write session.

© 2014-2019 Microchip Technology Inc.

TABLE 11-2: OUTPUT PIN SELECTION

RPn Port Pin	RPnR SFR	RPnR bits	RPnR Value to Peripheral Selection
RPD2	RPD2R	RPD2R<3:0>	0000 = No Connect 0001 = U3TX 0010 = $\overline{\text{U4RTS}}$ 0011 = Reserved 0100 = Reserved 0101 = Reserved 0110 = SDO2 0111 = Reserved 1000 = Reserved 1001 = Reserved 1010 = Reserved 1011 = OC3 1100 = C1TX(5) 1101 = C2OUT 1110 = SDO3 1111 = SDO4(3)
RPG8	RPG8R	RPG8R<3:0>	
RPF4	RPF4R	RPF4R<3:0>	
RPD10	RPD10R	RPD10R<3:0>	
RPF1	RPF1R	RPF1R<3:0>	
RPB9	RPB9R	RPB9R<3:0>	
RPB10	RPB10R	RPB10R<3:0>	
RPC14	RPC14R	RPC14R<3:0>	
RPB5(7)	RPB5R	RPB5R<3:0>	
RPC1(3)	RPC1R	RPC1R<3:0>	
RPD14(3)	RPD14R	RPD14R<3:0>	
RPG1(3)	RPG1R	RPG1R<3:0>	
RPA14(3)	RPA14R	RPA14R<3:0>	
RPD3	RPD3R	RPD3R<3:0>	0000 = No Connect 0001 = U2TX 0010 = Reserved 0011 = U1TX 0100 = $\overline{\text{U5RTS}}$(3) 0101 = Reserved 0110 = SDO2 0111 = Reserved 1000 = SDO1 1001 = Reserved 1010 = Reserved 1011 = OC4 1100 = Reserved 1101 = C3OUT 1110 = SDO3 1111 = SDO4(3)
RPG7	RPG7R	RPG7R<3:0>	
RPF5	RPF5R	RPF5R<3:0>	
RPD11	RPD11R	RPD11R<3:0>	
RPF0	RPF0R	RPF0R<3:0>	
RPB1	RPB1R	RPB1R<3:0>	
RPE5	RPE5R	RPE5R<3:0>	
RPC13	RPC13R	RPC13R<3:0>	
RPB3	RPB3R	RPB3R<3:0>	
RPF3(8)	RPF3R	RPF3R<3:0>	
RPC4(3)	RPC4R	RPC4R<3:0>	
RPD15(3)	RPD15R	RPD15R<3:0>	
RPG0(3)	RPG0R	RPG0R<3:0>	
RPA15(3)	RPA15R	RPA15R<3:0>	

Note 1: This selection is not available on 64-pin USB devices.
2: This selection is only available on 100-pin General Purpose devices.
3: This selection is not available on 64-pin devices.
4: This selection is not available when USBID functionality is used on USB devices.
5: This selection is not available on devices without a CAN module.
6: This selection is not available on USB devices.
7: This selection is not available when VBUSON functionality is used on USB devices.
8: This selection is only available on 64-pin General Purpose devices.

TABLE 11-2: OUTPUT PIN SELECTION (CONTINUED)

RPn Port Pin	RPnR SFR	RPnR bits	RPnR Value to Peripheral Selection
RPD9	RPD9R	RPD9R<3:0>	0000 = No Connect 0001 = $\overline{\text{U3RTS}}$ 0010 = U4TX 0011 = REFCLKO 0100 = U5TX(3) 0101 = Reserved 0110 = Reserved 0111 = $\overline{\text{SS1}}$ 1000 = SDO1 1001 = Reserved 1010 = Reserved 1011 = OC5 1100 = Reserved 1101 = C1OUT 1110 = $\overline{\text{SS3}}$ 1111 = $\overline{\text{SS4}}$(3)
RPG6	RPG6R	RPG6R<3:0>	
RPB8	RPB8R	RPB8R<3:0>	
RPB15	RPB15R	RPB15R<3:0>	
RPD4	RPD4R	RPD4R<3:0>	
RPB0	RPB0R	RPB0R<3:0>	
RPE3	RPE3R	RPE3R<3:0>	
RPB7	RPB7R	RPB7R<3:0>	
RPB2	RPB2R	RPB2R<3:0>	
RPF12(3)	RPF12R	RPF12R<3:0>	
RPD12(3)	RPD12R	RPD12R<3:0>	
RPF8(3)	RPF8R	RPF8R<3:0>	
RPC3(3)	RPC3R	RPC3R<3:0>	
RPE9(3)	RPE9R	RPE9R<3:0>	
RPD1	RPD1R	RPD1R<3:0>	0000 = No Connect 0001 = $\overline{\text{U2RTS}}$ 0010 = Reserved 0011 = $\overline{\text{U1RTS}}$ 0100 = U5TX(3) 0101 = Reserved 0110 = $\overline{\text{SS2}}$ 0111 = Reserved 1000 = SDO1 1001 = Reserved 1010 = Reserved 1011 = OC2 1100 = OC1 1101 = Reserved 1110 = Reserved 1111 = Reserved
RPG9	RPG9R	RPG9R<3:0>	
RPB14	RPB14R	RPB14R<3:0>	
RPD0	RPD0R	RPD0R<3:0>	
RPD8	RPD8R	RPD8R<3:0>	
RPB6	RPB6R	RPB6R<3:0>	
RPD5	RPD5R	RPD5R<3:0>	
RPF3(2)	RPF3R	RPF3R<3:0>	
RPF6(2)	RPF6R	RPF6R<3:0>	
RPF13(3)	RPF13R	RPF13R<3:0>	
RPC2(3)	RPC2R	RPC2R<3:0>	
RPE8(3)	RPE8R	RPE8R<3:0>	
RPF2(1)	RPF2R	RPF2R<3:0>	

Note 1: This selection is not available on 64-pin USB devices.
2: This selection is only available on 100-pin General Purpose devices.
3: This selection is not available on 64-pin devices.
4: This selection is not available when USBID functionality is used on USB devices.
5: This selection is not available on devices without a CAN module.
6: This selection is not available on USB devices.
7: This selection is not available when VBUSON functionality is used on USB devices.
8: This selection is only available on 64-pin General Purpose devices.

© 2014-2019 Microchip Technology Inc.

11.4 Control Registers

TABLE 11-3: PORTA REGISTER MAP 100-PIN DEVICES ONLY

Virtual Address (BF88_#)	Register Name(1)	Bit Range	Bits																All Resets
			31/15	30/14	29/13	28/12	27/11	26/10	25/9	24/8	23/7	22/6	21/5	20/4	19/3	18/2	17/1	16/0	
6000	ANSELA	31:16	—	—	—	—	—	—	—	—	—	—	—	—	—	—	—	—	0000
		15:0	—	—	—	—	—	ANSELA10	ANSELA9	—	—	—	—	—	—	—	—	—	0060
6010	TRISA	31:16	—	—	—	—	—	—	—	—	—	—	—	—	—	—	—	—	0000
		15:0	TRISA15	TRISA14	—	—	—	TRISA10	TRISA9	—	TRISA7	TRISA6	TRISA5	TRISA4	TRISA3	TRISA2	TRISA1	TRISA0	C6FF
6020	PORTA	31:16	—	—	—	—	—	—	—	—	—	—	—	—	—	—	—	—	0000
		15:0	RA15	RA14	—	—	—	RA10	RA9	—	RA7	RA6	RA5	RA4	RA3	RA2	RA1	RA0	xxxx
6030	LATA	31:16	—	—	—	—	—	—	—	—	—	—	—	—	—	—	—	—	0000
		15:0	LATA15	LATA14	—	—	—	LATA10	LATA9	—	LATA7	LATA6	LATA5	LATA4	LATA3	LATA2	LATA1	LATA0	xxxx
6040	ODCA	31:16	—	—	—	—	—	—	—	—	—	—	—	—	—	—	—	—	0000
		15:0	ODCA15	ODCA14	—	—	—	ODCA10	ODCA9	—	ODCA7	ODCA6	ODCA5	ODCA4	ODCA3	ODCA2	ODCA1	ODCA0	0000
6050	CNPUA	31:16	—	—	—	—	—	—	—	—	—	—	—	—	—	—	—	—	0000
		15:0	CNPUA15	CNPUA14	—	—	—	CNPUA10	CNPUA9	—	CNPUA7	CNPUA6	CNPUA5	CNPUA4	CNPUA3	CNPUA2	CNPUA1	CNPUA0	0000
6060	CNPDA	31:16	—	—	—	—	—	—	—	—	—	—	—	—	—	—	—	—	0000
		15:0	CNPDA15	CNPDA14	—	—	—	CNPDA10	CNPDA9	—	CNPDA7	CNPDA6	CNPDA5	CNPDA4	CNPDA3	CNPDA2	CNPDA1	CNPDA0	0000
6070	CNCONA	31:16	—	—	—	—	—	—	—	—	—	—	—	—	—	—	—	—	0000
		15:0	ON	—	SIDL	—	—	—	—	—	—	—	—	—	—	—	—	—	0000
6080	CNENA	31:16	—	—	—	—	—	—	—	—	—	—	—	—	—	—	—	—	0000
		15:0	CNIEA15	CNIEA14	—	—	—	CNIEA10	CNIEA9	—	CNIEA7	CNIEA6	CNIEA5	CNIEA4	CNIEA3	CNIEA2	CNIEA1	CNIEA0	0000
6090	CNSTATA	31:16	—	—	—	—	—	—	—	—	—	—	—	—	—	—	—	—	0000
		15:0	CN STATA15	CN STATA14	—	—	—	CN STATA10	CN STATA9	—	CN STATA7	CN STATA6	CN STATA5	CN STATA4	CN STATA3	CN STATA2	CN STATA1	CN STATA0	0000

Legend: x = Unknown value on Reset; — = Unimplemented, read as '0'; Reset values are shown in hexadecimal.

Note 1: All registers in this table have corresponding CLR, SET and INV registers at its virtual address, plus an offset of 0x4, 0x8 and 0xC, respectively. See **Section 11.2 "CLR, SET, and INV Registers"** for more information.

© 2014-2019 Microchip Technology Inc.

TABLE 11-4: PORTB REGISTER MAP

Virtual Address (BF88_#)	Register Name(1)	Bit Range	Bits 31/15	30/14	29/13	28/12	27/11	26/10	25/9	24/8	23/7	22/6	21/5	20/4	19/3	18/2	17/1	16/0	All Resets
6100	ANSELB	31:16	—	—	—	—	—	—	—	—	—	—	—	—	—	—	—	—	0000
		15:0	ANSELB15	ANSELB14	ANSELB13	ANSELB12	ANSELB11	ANSELB10	ANSELB9	ANSELB8	ANSELB7	ANSELB6	ANSELB5	ANSELB4	ANSELB3	ANSELB2	ANSELB1	ANSELB0	FFFF
6110	TRISB	31:16	—	—	—	—	—	—	—	—	—	—	—	—	—	—	—	—	0000
		15:0	TRISB15	TRISB14	TRISB13	TRISB12	TRISB11	TRISB10	TRISB9	TRISB8	TRISB7	TRISB6	TRISB5	TRISB4	TRISB3	TRISB2	TRISB1	TRISB0	FFFF
6120	PORTB	31:16	—	—	—	—	—	—	—	—	—	—	—	—	—	—	—	—	0000
		15:0	RB15	RB14	RB13	RB12	RB11	RB10	RB9	RB8	RB7	RB6	RB5	RB4	RB3	RB2	RB1	RB0	xxxx
6130	LATB	31:16	—	—	—	—	—	—	—	—	—	—	—	—	—	—	—	—	0000
		15:0	LATB15	LATB14	LATB13	LATB12	LATB11	LATB10	LATB9	LATB8	LATB7	LATB6	LATB5	LATB4	LATB3	LATB2	LATB1	LATB0	xxxx
6140	ODCB	31:16	—	—	—	—	—	—	—	—	—	—	—	—	—	—	—	—	0000
		15:0	ODCB15	ODCB14	ODCB13	ODCB12	ODCB11	ODCB10	ODCB9	ODCB8	ODCB7	ODCB6	ODCB5	ODCB4	ODCB3	ODCB2	ODCB1	ODCB0	0000
6150	CNPUB	31:16	—	—	—	—	—	—	—	—	—	—	—	—	—	—	—	—	0000
		15:0	CNPUB15	CNPUB14	CNPUB13	CNPUB12	CNPUB11	CNPUB10	CNPUB9	CNPUB8	CNPUB7	CNPUB6	CNPUB5	CNPUB4	CNPUB3	CNPUB2	CNPUB1	CNPUB0	0000
6160	CNPDB	31:16	—	—	—	—	—	—	—	—	—	—	—	—	—	—	—	—	0000
		15:0	CNPDB15	CNPDB14	CNPDB13	CNPDB12	CNPDB11	CNPDB10	CNPDB9	CNPDB8	CNPDB7	CNPDB6	CNPDB5	CNPDB4	CNPDB3	CNPDB2	CNPDB1	CNPDB0	0000
6170	CNCONB	31:16	—	—	—	—	—	—	—	—	—	—	—	—	—	—	—	—	0000
		15:0	ON	—	SIDL	—	—	—	—	—	—	—	—	—	—	—	—	—	0000
6180	CNENB	31:16	—	—	—	—	—	—	—	—	—	—	—	—	—	—	—	—	0000
		15:0	CNIEB15	CNIEB14	CNIEB13	CNIEB12	CNIEB11	CNIEB10	CNIEB9	CNIEB8	CNIEB7	CNIEB6	CNIEB5	CNIEB4	CNIEB3	CNIEB2	CNIEB1	CNIEB0	0000
6190	CNSTATB	31:16	—	—	—	—	—	—	—	—	—	—	—	—	—	—	—	—	0000
		15:0	CN STATB15	CN STATB14	CN STATB13	CN STATB12	CN STATB11	CN STATB10	CN STATB9	CN STATB8	CN STATB7	CN STATB6	CN STATB5	CN STATB4	CN STATB3	CN STATB2	CN STATB1	CN STATB0	0000

Legend: x = Unknown value on Reset; — = Unimplemented, read as '0'; Reset values are shown in hexadecimal.

Note 1: All registers in this table have corresponding CLR, SET and INV registers at its virtual address, plus an offset of 0x4, 0x8 and 0xC, respectively. See **Section 11.2 "CLR, SET, and INV Registers"** for more information.

© 2014-2019 Microchip Technology Inc.

TABLE 11-5: PORTC REGISTER MAP FOR 100-PIN DEVICES ONLY

Virtual Address (BF88_#)	Register Name(1)	Bit Range	Bits																All Resets
			31/15	30/14	29/13	28/12	27/11	26/10	25/9	24/8	23/7	22/6	21/5	20/4	19/3	18/2	17/1	16/0	
6200	ANSELC	31:16	—	—	—	—	—	—	—	—	—	—	—	—	—	—	—	—	0000
		15:0	—	—	—	—	—	—	—	—	—	—	—	—	ANSELC3	ANSELC2	ANSELC1	—	000E
6210	TRISC	31:16	—	—	—	—	—	—	—	—	—	—	—	—	—	—	—	—	0000
		15:0	TRISC15	TRISC14	TRISC13	TRISC12	—	—	—	—	—	—	—	TRISC4	TRISC3	TRISC2	TRISC1	—	FFFF
6220	PORTC	31:16	—	—	—	—	—	—	—	—	—	—	—	—	—	—	—	—	0000
		15:0	RC15	RC14	RC13	RC12	—	—	—	—	—	—	—	RC4	RC3	RC2	RC1	—	xxxx
6230	LATC	31:16	—	—	—	—	—	—	—	—	—	—	—	—	—	—	—	—	0000
		15:0	LATC15	LATC14	LATC13	LATC12	—	—	—	—	—	—	—	LATC4	LATC3	LATC2	LATC1	—	xxxx
6240	ODCC	31:16	—	—	—	—	—	—	—	—	—	—	—	—	—	—	—	—	0000
		15:0	ODCC15	ODCC14	ODCC13	ODCC12	—	—	—	—	—	—	—	ODCC4	ODCC3	ODCC2	ODCC1	—	0000
6250	CNPUC	31:16	—	—	—	—	—	—	—	—	—	—	—	—	—	—	—	—	0000
		15:0	CNPUC15	CNPUC14	CNPUC13	CNPUC12	—	—	—	—	—	—	—	CNPUC4	CNPUC3	CNPUC2	CNPUC1	—	0000
6260	CNPDC	31:16	—	—	—	—	—	—	—	—	—	—	—	—	—	—	—	—	0000
		15:0	CNPDC15	CNPDC14	CNPDC13	CNPDC12	—	—	—	—	—	—	—	CNPDC4	CNPDC3	CNPDC2	CNPDC1	—	0000
6270	CNCONC	31:16	—	—	—	—	—	—	—	—	—	—	—	—	—	—	—	—	0000
		15:0	ON	—	SIDL	—	—	—	—	—	—	—	—	—	—	—	—	—	0000
6280	CNENC	31:16	—	—		—	—	—	—	—	—	—	—	—	—	—	—	—	0000
		15:0	CNIEC15	CNIEC14	CNIEC13	CNIEC12	—	—	—	—	—	—	—	CNIEC4	CNIEC3	CNIEC2	CNIEC1	—	0000
6290	CNSTATC	31:16	—	—	—	—	—	—	—	—	—	—	—	—	—	—	—	—	0000
		15:0	CNSTATC15	CNSTATC14	CNSTATC13	CNSTATC12	—	—	—	—	—	—	—	CNSTATC4	CNSTATC3	CNSTATC2	CNSTATC1	—	0000

Legend: x = Unknown value on Reset; — = Unimplemented, read as ‘0’; Reset values are shown in hexadecimal.

Note 1: All registers in this table have corresponding CLR, SET and INV registers at its virtual address, plus an offset of 0x4, 0x8 and 0xC, respectively. See **Section 11.2 “CLR, SET, and INV Registers”** for more information.

© 2014-2019 Microchip Technology Inc.

TABLE 11-6: PORTC REGISTER MAP FOR 64-PIN DEVICES ONLY

Virtual Address (BF88_#)	Register Name(1)	Bit Range	Bits																All Resets
			31/15	30/14	29/13	28/12	27/11	26/10	25/9	24/8	23/7	22/6	21/5	20/4	19/3	18/2	17/1	16/0	
6200	ANSELC	31:16	—	—	—	—	—	—	—	—	—	—	—	—	—	—	—	—	0000
		15:0	—	—	—	—	—	—	—	—	—	—	—	—	ANSELC3	ANSELC2	ANSELC1	—	000E
6210	TRISC	31:16	—	—	—	—	—	—	—	—	—	—	—	—	—	—	—	—	0000
		15:0	TRISC15	TRISC14	TRISC13	TRISC12	—	—	—	—	—	—	—	—	—	—	—	—	F000
6220	PORTC	31:16	—	—	—	—	—	—	—	—	—	—	—	—	—	—	—	—	0000
		15:0	RC15	RC14	RC13	RC12	—	—	—	—	—	—	—	—	—	—	—	—	xxxx
6230	LATC	31:16	—	—	—	—	—	—	—	—	—	—	—	—	—	—	—	—	0000
		15:0	LATC15	LATC14	LATC13	LATC12	—	—	—	—	—	—	—	—	—	—	—	—	xxxx
6240	ODCC	31:16	—	—	—	—	—	—	—	—	—	—	—	—	—	—	—	—	0000
		15:0	ODCC15	ODCC14	ODCC13	ODCC12	—	—	—	—	—	—	—	—	—	—	—	—	0000
6250	CNPUC	31:16	—	—	—	—	—	—	—	—	—	—	—	—	—	—	—	—	0000
		15:0	CNPUC15	CNPUC14	CNPUC13	CNPUC12	—	—	—	—	—	—	—	—	—	—	—	—	0000
6260	CNPDC	31:16	—	—	—	—	—	—	—	—	—	—	—	—	—	—	—	—	0000
		15:0	CNPDC15	CNPDC14	CNPDC13	CNPDC12	—	—	—	—	—	—	—	—	—	—	—	—	0000
6270	CNCONC	31:16	—	—	—	—	—	—	—	—	—	—	—	—	—	—	—	—	0000
		15:0	ON	—	SIDL	—	—	—	—	—	—	—	—	—	—	—	—	—	0000
6280	CNENC	31:16	—	—		—	—	—	—	—	—	—	—	—	—	—	—	—	0000
		15:0	CNIEC15	CNIEC14	CNIEC13	CNIEC12	—	—	—	—	—	—	—	—	—	—	—	—	0000
6290	CNSTATC	31:16	—	—	—	—	—	—	—	—	—	—	—	—	—	—	—	—	0000
		15:0	CNSTATC15	CNSTATC14	CNSTATC13	CNSTATC12	—	—	—	—	—	—	—	—	—	—	—	—	0000

Legend: x = Unknown value on Reset; — = Unimplemented, read as '0'; Reset values are shown in hexadecimal.

Note 1: All registers in this table have corresponding CLR, SET and INV registers at its virtual address, plus an offset of 0x4, 0x8 and 0xC, respectively. See **Section 11.2 "CLR, SET, and INV Registers"** for more information.

© 2014-2019 Microchip Technology Inc.

TABLE 11-7: PORTD REGISTER MAP FOR 100-PIN DEVICES ONLY

Virtual Address (BF88_#)	Register Name(1)	Bit Range	Bits																All Resets
			31/15	30/14	29/13	28/12	27/11	26/10	25/9	24/8	23/7	22/6	21/5	20/4	19/3	18/2	17/1	16/0	
6300	ANSELD	31:16	—	—	—	—	—	—	—	—	—	—	—	—	—	—	—	—	0000
		15:0	ANSELD15	ANSELD14	ANSELD13	ANSELD12	—	—	—	—	ANSELD7	ANSELD6	—	—	ANSELD3	ANSELD2	ANSELD1	—	F0CE
6310	TRISD	31:16	—	—	—	—	—	—	—	—	—	—	—	—	—	—	—	—	0000
		15:0	TRISD15	TRISD14	TRISD13	TRISD12	TRISD11	TRISD10	TRISD9	TRISD8	TRISD7	TRISD6	TRISD5	TRISD4	TRISD3	TRISD2	TRISD1	TRISD0	FFFF
5320	PORTD	31:16	—	—	—	—	—	—	—	—	—	—	—	—	—	—	—	—	0000
		15:0	RD15	RD14	RD13	RD12	RD11	RD10	RD9	RD8	RD7	RD6	RD5	RD4	RD3	RD2	RD1	RD0	xxxx
6330	LATD	31:16	—	—	—	—	—	—	—	—	—	—	—	—	—	—	—	—	0000
		15:0	LATD15	LATD14	LATD13	LATD12	LATD11	LATD10	LATD9	LATD8	LATD7	LATD6	LATD5	LATD4	LATD3	LATD2	LATD1	LATD0	xxxx
6340	ODCD	31:16	—	—	—	—	—	—	—	—	—	—	—	—	—	—	—	—	0000
		15:0	ODCD15	ODCD14	ODCD13	ODCD12	ODCD11	ODCD10	ODCD9	ODCD8	ODCD7	ODCD6	ODCD5	ODCD4	ODCD3	ODCD2	ODCD1	ODCD0	0000
6350	CNPUD	31:16	—	—	—	—	—	—	—	—	—	—	—	—	—	—	—	—	0000
		15:0	CNPUD15	CNPUD14	CNPUD13	CNPUD12	CNPUD11	CNPUD10	CNPUD9	CNPUD8	CNPUD7	CNPUD6	CNPUD5	CNPUD4	CNPUD3	CNPUD2	CNPUD1	CNPUD0	0000
6360	CNPDD	31:16	—	—	—	—	—	—	—	—	—	—	—	—	—	—	—	—	0000
		15:0	CNPDD15	CNPDD14	CNPDD13	CNPDD12	CNPDD11	CNPDD10	CNPDD9	CNPDD8	CNPDD7	CNPDD6	CNPDD5	CNPDD4	CNPDD3	CNPDD2	CNPDD1	CNPDD0	0000
6370	CNCOND	31:16	—	—	—	—	—	—	—	—	—	—	—	—	—	—	—	—	0000
		15:0	ON	—	SIDL	—	—	—	—	—	—	—	—	—	—	—	—	—	0000
6380	CNEND	31:16	—	—	—	—	—	—	—	—	—	—	—	—	—	—	—	—	0000
		15:0	CNIED15	CNIED14	CNIED13	CNIED12	CNIED11	CNIED10	CNIED9	CNIED8	CNIED7	CNIED6	CNIED5	CNIED4	CNIED3	CNIED2	CNIED1	CNIED0	0000
6390	CNSTATD	31:16	—	—	—	—	—	—	—	—	—	—	—	—	—	—	—	—	0000
		15:0	CNS TATD15	CN STATD14	CN STATD13	CN STATD12	CN STATD11	CN STATD10	CN STATD9	CN STATD8	CN STATD7	CN STATD6	CN STATD5	CN STATD4	CN STATD3	CN STATD2	CN STATD1	CN STATD0	0000

Legend: x = Unknown value on Reset; — = Unimplemented, read as '0'; Reset values are shown in hexadecimal.

Note 1: All registers in this table have corresponding CLR, SET and INV registers at its virtual address, plus an offset of 0x4, 0x8 and 0xC, respectively. See **Section 11.2 "CLR, SET, and INV Registers"** for more information.

© 2014-2019 Microchip Technology Inc.

TABLE 11-8: PORTD REGISTER MAP FOR 64-PIN DEVICES ONLY

Virtual Address (BF88_#)	Register Name(1)	Bit Range	Bits																All Resets
			31/15	30/14	29/13	28/12	27/11	26/10	25/9	24/8	23/7	22/6	21/5	20/4	19/3	18/2	17/1	16/0	
6300	ANSELD	31:16	—	—	—	—	—	—	—	—	—	—	—	—	—	—	—	—	0000
		15:0	—	—	—	—	—	—	—	—	—	—	—	—	ANSELD3	ANSELD2	ANSELD1	—	000E
6310	TRISD	31:16	—	—	—	—	—	—	—	—	—	—	—	—	—	—	—	—	0000
		15:0	—	—	—	—	TRISD11	TRISD10	TRISD9	TRISD8	TRISD7	TRISD6	TRISD5	TRISD4	TRISD3	TRISD2	TRISD1	TRISD0	0FFF
5320	PORTD	31:16	—	—	—	—	—	—	—	—	—	—	—	—	—	—	—	—	0000
		15:0	—	—	—	—	RD11	RD10	RD9	RD8	RD7	RD6	RD5	RD4	RD3	RD2	RD1	RD0	xxxx
6330	LATD	31:16	—	—	—	—	—	—	—	—	—	—	—	—	—	—	—	—	0000
		15:0	—	—	—	—	LATD11	LATD10	LATD9	LATD8	LATD7	LATD6	LATD5	LATD4	LATD3	LATD2	LATD1	LATD0	xxxx
6340	ODCD	31:16	—	—	—	—	—	—	—	—	—	—	—	—	—	—	—	—	0000
		15:0	—	—	—	—	ODCD11	ODCD10	ODCD9	ODCD8	ODCD7	ODCD6	ODCD5	ODCD4	ODCD3	ODCD2	ODCD1	ODCD0	0000
6350	CNPUD	31:16	—	—	—	—	—	—	—	—	—	—	—	—	—	—	—	—	0000
		15:0	—	—	—	—	CNPUD11	CNPUD10	CNPUD9	CNPUD8	CNPUD7	CNPUD6	CNPUD5	CNPUD4	CNPUD3	CNPUD2	CNPUD1	CNPUD0	0000
6360	CNPDD	31:16	—	—	—	—	—	—	—	—	—	—	—	—	—	—	—	—	0000
		15:0	—	—	—	—	CNPDD11	CNPDD10	CNPDD9	CNPDD8	CNPDD7	CNPDD6	CNPDD5	CNPDD4	CNPDD3	CNPDD2	CNPDD1	CNPDD0	0000
6370	CNCOND	31:16	—	—	—	—	—	—	—	—	—	—	—	—	—	—	—	—	0000
		15:0	ON	—	SIDL	—	—	—	—	—	—	—	—	—	—	—	—	—	0000
6380	CNEND	31:16	—	—	—	—	—	—	—	—	—	—	—	—	—	—	—	—	0000
		15:0	—	—	—	—	CNIED11	CNIED10	CNIED9	CNIED8	CNIED7	CNIED6	CNIED5	CNIED4	CNIED3	CNIED2	CNIED1	CNIED0	0000
6390	CNSTATD	31:16	—	—	—	—	—	—	—	—	—	—	—	—	—	—	—	—	0000
		15:0	—	—	—	—	CN STATD11	CN STATD10	CN STATD9	CN STATD8	CN STATD7	CN STATD6	CN STATD5	CN STATD4	CN STATD3	CN STATD2	CN STATD1	CN STATD0	0000

Legend: x = Unknown value on Reset; — = Unimplemented, read as '0'; Reset values are shown in hexadecimal.

Note 1: All registers in this table have corresponding CLR, SET and INV registers at its virtual address, plus an offset of 0x4, 0x8 and 0xC, respectively. See **Section 11.2 "CLR, SET, and INV Registers"** for more information.

© 2014-2019 Microchip Technology Inc.

TABLE 11-9: PORTE REGISTER MAP FOR 100-PIN DEVICES ONLY

Virtual Address (BF88_#)	Register Name(1)	Bit Range	Bits																All Resets
			31/15	30/14	29/13	28/12	27/11	26/10	25/9	24/8	23/7	22/6	21/5	20/4	19/3	18/2	17/1	16/0	
6400	ANSELE	31:16	—	—	—	—	—	—	—	—	—	—	—	—	—	—	—	—	0000
		15:0	—	—	—	—	—	—	ANSELE9	ANSELE8	ANSELE7	ANSELE6	ANSELE5	ANSELE4	—	ANSELE2	ANSELE1	ANSELE0	03F7
6410	TRISE	31:16	—	—	—	—	—	—	—	—	—	—	—	—	—	—	—	—	0000
		15:0	—	—	—	—	—	—	TRISE9	TRISE8	TRISE7	TRISE6	TRISE5	TRISE4	TRISE3	TRISE2	TRISE1	TRISE0	03FF
6420	PORTE	31:16	—	—	—	—	—	—	—	—	—	—	—	—	—	—	—	—	0000
		15:0	—	—	—	—	—	—	RE9	RE8	RE7	RE6	RE5	RE4	RE3	RE2	RE1	RE0	xxxx
6440	LATE	31:16	—	—	—	—	—	—	—	—	—	—	—	—	—	—	—	—	0000
		15:0	—	—	—	—	—	—	LATE9	LATE8	LATE7	LATE6	LATE5	LATE4	LATE3	LATE2	LATE1	LATE0	xxxx
6440	ODCE	31:16	—	—	—	—	—	—	—	—	—	—	—	—	—	—	—	—	0000
		15:0	—	—	—	—	—	—	ODCE9	ODCE8	ODCE7	ODCE6	ODCE5	ODCE4	ODCE3	ODCE2	ODCE1	ODCE0	0000
6450	CNPUE	31:16	—	—	—	—	—	—	—	—	—	—	—	—	—	—	—	—	0000
		15:0	—	—	—	—	—	—	CNPUE9	CNPUE8	CNPUE7	CNPUE6	CNPUE5	CNPUE4	CNPDE3	CNPUE2	CNPUE1	CNPUE0	0000
6460	CNPDE	31:16	—	—	—	—	—	—	—	—	—	—	—	—	—	—	—	—	0000
		15:0	—	—	—	—	—	—	CNPDE9	CNPDE8	CNPDE7	CNPDE6	CNPDE5	CNPDE4	CNPDE3	CNPDE2	CNPDE1	CNPDE0	0000
6470	CNCONE	31:16	—	—	—	—	—	—	—	—	—	—	—	—	—	—	—	—	0000
		15:0	ON	—	SIDL	—	—	—	—	—	—	—	—	—	—	—	—	—	0000
6480	CNENE	31:16	—	—	—	—	—	—	—	—	—	—	—	—	—	—	—	—	0000
		15:0	—	—	—	—	—	—	CNIEE9	CNIEE8	CNIEE7	CNIEE6	CNIEE5	CNIEE4	CNIEE3	CNIEE2	CNIEE1	CNIEE0	0000
6490	CNSTATE	31:16	—	—	—	—	—	—	—	—	—	—	—	—	—	—	—	—	0000
		15:0	—	—	—	—	—	—	CN STATE9	CN STATE8	CN STATE7	CN STATE6	CN STATE5	CN STATE4	CN STATE3	CN STATE2	CN STATE1	CN STATE0	0000

Legend: x = Unknown value on Reset; — = Unimplemented, read as '0'; Reset values are shown in hexadecimal.

Note 1: All registers in this table have corresponding CLR, SET and INV registers at its virtual address, plus an offset of 0x4, 0x8 and 0xC, respectively. See **Section 11.2 "CLR, SET, and INV Registers"** for more information.

© 2014-2019 Microchip Technology Inc.

TABLE 11-10: PORTE REGISTER MAP FOR 64-PIN DEVICES ONLY

Virtual Address (BF88_#)	Register Name(1)	Bit Range	Bits																All Resets
			31/15	30/14	29/13	28/12	27/11	26/10	25/9	24/8	23/7	22/6	21/5	20/4	19/3	18/2	17/1	16/0	
6400	ANSELE	31:16	—	—	—	—	—	—	—	—	—	—	—	—	—	—	—	—	0000
		15:0	—	—	—	—	—	—	—	—	ANSELE7	ANSELE6	ANSELE5	ANSELE4	—	ANSELE2	—	—	03F4
6410	TRISE	31:16	—	—	—	—	—	—	—	—	—	—	—	—	—	—	—	—	0000
		15:0	—	—	—	—	—	—	—	—	TRISE7	TRISE6	TRISE5	TRISE4	TRISE3	TRISE2	TRISE1	TRISE0	00FF
6420	PORTE	31:16	—	—	—	—	—	—	—	—	—	—	—	—	—	—	—	—	0000
		15:0	—	—	—	—	—	—	—	—	RE7	RE6	RE5	RE4	RE3	RE2	RE1	RE0	xxxx
6440	LATE	31:16	—	—	—	—	—	—	—	—	—	—	—	—	—	—	—	—	0000
		15:0	—	—	—	—	—	—	—	—	LATE7	LATE6	LATE5	LATE4	LATE3	LATE2	LATE1	LATE0	xxxx
6440	ODCE	31:16	—	—	—	—	—	—	—	—	—	—	—	—	—	—	—	—	0000
		15:0	—	—	—	—	—	—	—	—	ODCE7	ODCE6	ODCE5	ODCE4	ODCE3	ODCE2	ODCE1	ODCE0	0000
6450	CNPUE	31:16	—	—	—	—	—	—	—	—	—	—	—	—	—	—	—	—	0000
		15:0	—	—	—	—	—	—	—	—	CNPUE7	CNPUE6	CNPUE5	CNPUE4	CNPDE3	CNPUE2	CNPUE1	CNPUE0	0000
6460	CNPDE	31:16	—	—	—	—	—	—	—	—	—	—	—	—	—	—	—	—	0000
		15:0	—	—	—	—	—	—	—	—	CNPDE7	CNPDE6	CNPDE5	CNPDE4	CNPDE3	CNPDE2	CNPDE1	CNPDE0	0000
6470	CNCONE	31:16	—	—	—	—	—	—	—	—	—	—	—	—	—	—	—	—	0000
		15:0	ON	—	SIDL	—	—	—	—	—	—	—	—	—	—	—	—	—	0000
6480	CNENE	31:16	—	—	—	—	—	—	—	—	—	—	—	—	—	—	—	—	0000
		15:0	—	—	—	—	—	—	—	—	CNIEE7	CNIEE6	CNIEE5	CNIEE4	CNIEE3	CNIEE2	CNIEE1	CNIEE0	0000
6490	CNSTATE	31:16	—	—	—	—	—	—	—	—	—	—	—	—	—	—	—	—	0000
		15:0	—	—	—	—	—	—	—	—	CN STATE7	CN STATE6	CN STATE5	CN STATE4	CN STATE3	CN STATE2	CN STATE1	CN STATE0	0000

Legend: x = Unknown value on Reset; — = Unimplemented, read as '0'; Reset values are shown in hexadecimal.

Note 1: All registers in this table have corresponding CLR, SET and INV registers at its virtual address, plus an offset of 0x4, 0x8 and 0xC, respectively. See **Section 11.2 "CLR, SET, and INV Registers"** for more information.

© 2014-2019 Microchip Technology Inc.

TABLE 11-11: PORTF REGISTER MAP FOR PIC32MX130F128L, PIC32MX150F256L, AND PIC32MX170F512L DEVICES ONLY

Virtual Address (BF88_#)	Register Name(1)	Bit Range	Bits																All Resets
			31/15	30/14	29/13	28/12	27/11	26/10	25/9	24/8	23/7	22/6	21/5	20/4	19/3	18/2	17/1	16/0	
6500	ANSELF	31:16	—	—	—	—	—	—	—	—	—	—	—	—	—	—	—	—	0000
		15:0	—	—	ANSELE13	ANSELE12	—	—	—	ANSELE8	—	—	—	—	—	ANSELE2	ANSELE1	ANSELE0	3107
6510	TRISF	31:16	—	—	—	—	—	—	—	—	—	—	—	—	—	—	—	—	0000
		15:0	—	—	TRISF13	TRISF12	—	—	—	TRISF8	TRISF7	TRISF6	TRISF5	TRISF4	TRISF3	TRISF2	TRISF1	TRISF0	31FF
6520	PORTF	31:16	—	—	—	—	—	—	—	—	—	—	—	—	—	—	—	—	0000
		15:0	—	—	RF13	RF12	—	—	—	RF8	RF7	RF6	RF5	RF4	RF3	RF2	RF1	RF0	xxxx
6530	LATF	31:16	—	—	—	—	—	—	—	—	—	—	—	—	—	—	—	—	0000
		15:0	—	—	LATF13	LATF12	—	—	—	LATF8	LATF7	LATF6	LATF5	LATF4	LATF3	LATF2	LATF1	LATF0	xxxx
6540	ODCF	31:16	—	—	—	—	—	—	—	—	—	—	—	—	—	—	—	—	0000
		15:0	—	—	ODCF13	ODCF12	—	—	—	ODCF8	ODCF7	ODCF6	ODCF5	ODCF4	ODCF3	ODCF2	ODCF1	ODCF0	0000
6550	CNPUF	31:16	—	—	—	—	—	—	—	—	—	—	—	—	—	—	—	—	0000
		15:0	—	—	CNPUF13	CNPUF12	—	—	—	CNPUF8	CNPUF7	CNPUF6	CNPUF5	CNPUF4	CNPDF3	CNPUF2	CNPUF1	CNPUF0	0000
6560	CNPDF	31:16	—	—	—	—	—	—	—	—	—	—	—	—	—	—	—	—	0000
		15:0	—	—	CNPDF13	CNPDF12	—	—	—	CNPDF8	CNPDF7	CNPDF6	CNPDF5	CNPDF4	CNPDF3	CNPDF2	CNPDF1	CNPDF0	0000
6570	CNCONF	31:16	—	—	—	—	—	—	—	—	—	—	—	—	—	—	—	—	0000
		15:0	ON	—	SIDL	—	—	—	—	—	—	—	—	—	—	—	—	—	0000
6580	CNENF	31:16	—	—	—	—	—	—	—	—	—	—	—	—	—	—	—	—	0000
		15:0	—	—	CNIEF13	CNIEF12	—	—	—	CNIEF8	CNIEF7	CNIEF6	CNIEF5	CNIEF4	CNIEF3	CNIEF2	CNIEF1	CNIEF0	0000
6590	CNSTATF	31:16	—	—	—	—	—	—	—	—	—	—	—	—	—	—	—	—	0000
		15:0	—	—	CN STATF13	CN STATF12	—	—	—	CN STATF8	CN STATF7	CN STATF6	CN STATF5	CN STATF4	CN STATF3	CN STATF2	CN STATF1	CN STATF0	0000

Legend: x = Unknown value on Reset; — = Unimplemented, read as '0'; Reset values are shown in hexadecimal.

Note 1: All registers in this table have corresponding CLR, SET and INV registers at its virtual address, plus an offset of 0x4, 0x8 and 0xC, respectively. See **Section 11.2 "CLR, SET, and INV Registers"** for more information.

© 2014-2019 Microchip Technology Inc.

TABLE 11-12: PORTF REGISTER MAP FOR PIC32MX230F128L, PIC32MX530F128L, PIC32MX250F256L, PIC32MX550F256L, PIC32MX270F512L, AND PIC32MX570F512L DEVICES ONLY

Virtual Address (BF88_#)	Register Name(1)	Bit Range	Bits																All Resets
			31/15	30/14	29/13	28/12	27/11	26/10	25/9	24/8	23/7	22/6	21/5	20/4	19/3	18/2	17/1	16/0	
6500	ANSELF	31:16	—	—	—	—	—	—	—	—	—	—	—	—	—	—	—	—	0000
		15:0	—	—	ANSELE13	ANSELE12	—	—	—	ANSELE8	—	—	—	—	—	ANSELE2	ANSELE1	ANSELE0	3107
6510	TRISF	31:16	—	—	—	—	—	—	—	—	—	—	—	—	—	—	—	—	0000
		15:0	—	—	TRISF13	TRISF12	—	—	—	TRISF8	—	—	TRISF5	TRISF4	TRISF3	TRISF2	TRISF1	TRISF0	313F
6520	PORTF	31:16	—	—	—	—	—	—	—	—	—	—	—	—	—	—	—	—	0000
		15:0	—	—	RF13	RF12	—	—	—	RF8	—	—	RF5	RF4	RF3	RF2	RF1	RF0	xxxx
6530	LATF	31:16	—	—	—	—	—	—	—	—	—	—	—	—	—	—	—	—	0000
		15:0	—	—	LATF13	LATF12	—	—	—	LATF8	—	—	LATF5	LATF4	LATF3	LATF2	LATF1	LATF0	xxxx
6540	ODCF	31:16	—	—	—	—	—	—	—	—	—	—	—	—	—	—	—	—	0000
		15:0	—	—	ODCF13	ODCF12	—	—	—	ODCF8	—	—	ODCF5	ODCF4	ODCF3	ODCF2	ODCF1	ODCF0	0000
6550	CNPUF	31:16	—	—	—	—	—	—	—	—	—	—	—	—	—	—	—	—	0000
		15:0	—	—	CNPUF13	CNPUF12	—	—	—	CNPUF8	—	—	CNPUF5	CNPUF4	CNPDF3	CNPUF2	CNPUF1	CNPUF0	0000
6560	CNPDF	31:16	—	—	—	—	—	—	—	—	—	—	—	—	—	—	—	—	0000
		15:0	—	—	CNPDF13	CNPDF12	—	—	—	CNPDF8	—	—	CNPDF5	CNPFF4	CNPDF3	CNPDF2	CNPDF1	CNPDF0	0000
6570	CNCONF	31:16	—	—	—	—	—	—	—	—	—	—	—	—	—	—	—	—	0000
		15:0	ON	—	SIDL	—	—	—	—	—	—	—	—	—	—	—	—	—	0000
6580	CNENF	31:16	—	—	—	—	—	—	—	—	—	—	—	—	—	—	—	—	0000
		15:0	—	—	CNIEF13	CNIEF12	—	—	—	CNIEF8	—	—	CNIEF5	CNIEF4	CNIEF3	CNIEF2	CNIEF1	CNIEF0	0000
6590	CNSTATF	31:16	—	—	—	—	—	—	—	—	—	—	—	—	—	—	—	—	0000
		15:0	—	—	CN STATF13	CN STATF12	—	—	—	CN STATF8	—	—	CN STATF5	CN STATF4	CN STATF3	CN STATF2	CN STATF1	CN STATF0	0000

Legend: x = Unknown value on Reset; — = Unimplemented, read as '0'; Reset values are shown in hexadecimal.

Note 1: All registers in this table have corresponding CLR, SET and INV registers at its virtual address, plus an offset of 0x4, 0x8 and 0xC, respectively. See **Section 11.2 "CLR, SET, and INV Registers"** for more information.

© 2014-2019 Microchip Technology Inc.

TABLE 11-13: PORTF REGISTER MAP FOR PIC32MX120F064H, PIC32MX130F128H, PIC32MX150F256H, AND PIC32MX170F512H DEVICES ONLY

Virtual Address (BF88_#)	Register Name(1)	Bit Range	Bits																All Resets
			31/15	30/14	29/13	28/12	27/11	26/10	25/9	24/8	23/7	22/6	21/5	20/4	19/3	18/2	17/1	16/0	
6510	TRISF	31:16	—	—	—	—	—	—	—	—	—	—	—	—	—	—	—	—	0000
		15:0	—	—	—	—	—	—	—	—	—	TRISF6	TRISF5	TRISF4	TRISF3	TRISF2	TRISF1	TRISF0	007F
6520	PORTF	31:16	—	—	—	—	—	—	—	—	—	—	—	—	—	—	—	—	0000
		15:0	—	—	—	—	—	—	—	—	—	RF6	RF5	RF4	RF3	RF2	RF1	RF0	xxxx
6530	LATF	31:16	—	—	—	—	—	—	—	—	—	—	—	—	—	—	—	—	0000
		15:0	—	—	—	—	—	—	—	—	—	LATF6	LATF5	LATF4	LATF3	LATF2	LATF1	LATF0	xxxx
6540	ODCF	31:16	—	—	—	—	—	—	—	—	—	—	—	—	—	—	—	—	0000
		15:0	—	—	—	—	—	—	—	—	—	ODCF6	ODCF5	ODCF4	ODCF3	ODCF2	ODCF1	ODCF0	0000
6550	CNPUF	31:16	—	—	—	—	—	—	—	—	—	—	—	—	—	—	—	—	0000
		15:0	—	—	—	—	—	—	—	—	—	CNPUF6	CNPUF5	CNPUF4	CNPUF3	CNPUF2	CNPUF1	CNPUF0	0000
6560	CNPDF	31:16	—	—	—	—	—	—	—	—	—	—	—	—	—	—	—	—	0000
		15:0	—	—	—	—	—	—	—	—	—	CNPDF6	CNPDF5	CNPDF4	CNPDF3	CNPDF2	CNPDF1	CNPDF0	0000
6570	CNCONF	31:16	—	—	—	—	—	—	—	—	—	—	—	—	—	—	—	—	0000
		15:0	ON	—	SIDL	—	—	—	—	—	—	—	—	—	—	—	—	—	0000
6580	CNENF	31:16	—	—	—	—	—	—	—	—	—	—	—	—	—	—	—	—	0000
		15:0	—	—	—	—	—	—	—	—	—	CNIEF6	CNIEF5	CNIEF4	CNIEF3	CNIEF2	CNIEF1	CNIEF0	0000
6590	CNSTATF	31:16	—	—	—	—	—	—	—	—	—	—	—	—	—	—	—	—	0000
		15:0	—	—	—	—	—	—	—	—	—	CN STATF6	CN STATF5	CN STATF4	CN STATF3	CN STATF2	CN STATF1	CN STATF0	0000

Legend: x = Unknown value on Reset; — = Unimplemented, read as '0'; Reset values are shown in hexadecimal.

Note 1: All registers in this table have corresponding CLR, SET and INV registers at its virtual address, plus an offset of 0x4, 0x8 and 0xC, respectively. See **Section 11.2 "CLR, SET, and INV Registers"** for more information.

© 2014-2019 Microchip Technology Inc.

TABLE 11-14: PORTF REGISTER MAP FOR PIC32MX230F128H, PIC32MX530F128H, PIC32MX250F256H, PIC32MX550F256H, PIC32MX270F512H, AND PIC32MX570F512H DEVICES ONLY

Virtual Address (BF88_#)	Register Name(1)	Bit Range	Bits																All Resets
			31/15	30/14	29/13	28/12	27/11	26/10	25/9	24/8	23/7	22/6	21/5	20/4	19/3	18/2	17/1	16/0	
6510	TRISF	31:16	—	—	—	—	—	—	—	—	—	—	—	—	—	—	—	—	0000
		15:0	—	—	—	—	—	—	—	—	—	—	TRISF5	TRISF4	TRISF3	—	TRISF1	TRISF0	003B
6520	PORTF	31:16	—	—	—	—	—	—	—	—	—	—	—	—	—	—	—	—	0000
		15:0	—	—	—	—	—	—	—	—	—	—	RF5	RF4	RF3	—	RF1	RF0	xxxx
6530	LATF	31:16	—	—	—	—	—	—	—	—	—	—	—	—	—	—	—	—	0000
		15:0	—	—	—	—	—	—	—	—	—	—	LATF5	LATF4	LATF3	—	LATF1	LATF0	xxxx
6540	ODCF	31:16	—	—	—	—	—	—	—	—	—	—	—	—	—	—	—	—	0000
		15:0	—	—	—	—	—	—	—	—	—	—	ODCF5	ODCF4	ODCF3	—	ODCF1	ODCF0	0000
6550	CNPUF	31:16	—	—	—	—	—	—	—	—	—	—	—	—	—	—	—	—	0000
		15:0	—	—	—	—	—	—	—	—	—	—	CNPUF5	CNPUF4	CNPUF3	—	CNPUF1	CNPUF0	0000
6560	CNPDF	31:16	—	—	—	—	—	—	—	—	—	—	—	—	—	—	—	—	0000
		15:0	—	—	—	—	—	—	—	—	—	—	CNPDF5	CNPDF4	CNPDF3	—	CNPDF1	CNPDF0	0000
6570	CNCONF	31:16	—	—	—	—	—	—	—	—	—	—	—	—	—	—	—	—	0000
		15:0	ON	—	SIDL	—	—	—	—	—	—	—	—	—	—	—	—	—	0000
6580	CNENF	31:16	—	—	—	—	—	—	—	—	—	—	—	—	—	—	—	—	0000
		15:0	—	—	—	—	—	—	—	—	—	—	CNIEF5	CNIEF4	CNIEF3	—	CNIEF1	CNIEF0	0000
6590	CNSTATF	31:16	—	—	—	—	—	—	—	—	—	—	—	—	—	—	—	—	0000
		15:0	—	—	—	—	—	—	—	—	—	—	CN STATF5	CN STATF4	CN STATF3	—	CN STATF1	CN STATF0	0000

Legend: x = Unknown value on Reset; — = Unimplemented, read as '0'; Reset values are shown in hexadecimal.

Note 1: All registers in this table have corresponding CLR, SET and INV registers at its virtual address, plus an offset of 0x4, 0x8 and 0xC, respectively. See **Section 11.2 "CLR, SET, and INV Registers"** for more information.

© 2014-2019 Microchip Technology Inc.

TABLE 11-15: PORTG REGISTER MAP FOR 100-PIN DEVICES ONLY

Virtual Address (BF88_#)	Register Name[1]	Bit Range	Bits																All Resets
			31/15	30/14	29/13	28/12	27/11	26/10	25/9	24/8	23/7	22/6	21/5	20/4	19/3	18/2	17/1	16/0	
6600	ANSELG	31:16	—	—	—	—	—	—	—	—	—	—	—	—	—	—	—	—	0000
		15:0	ANSELG15	—	—	—	—	—	ANSELG9	ANSELG8	ANSELG7	ANSELG6	—	—	—	—	—	—	83C0
6610	TRISG	31:16	—	—	—	—	—	—	—	—	—	—	—	—	—	—	—	—	0000
		15:0	TRISG15	TRISG14	TRISG13	TRISG12	—	—	TRISG9	TRISG8	TRISG7	TRISG6	—	—	TRISG3	TRISG2	TRISG1	TRISG0	F3CF
6620	PORTG	31:16	—	—	—	—	—	—	—	—	—	—	—	—	—	—	—	—	0000
		15:0	RG15	RG14	RG13	RG12	—	—	RG9	RG8	RG7	RG6	—	—	RG3[2]	RG2[2]	RG1	RG0	xxxx
6630	LATG	31:16	—	—	—	—	—	—	—	—	—	—	—	—	—	—	—	—	0000
		15:0	LATG15	LATG14	LATG13	LATG12	—	—	LATG9	LATG8	LATG7	LATG6	—	—	LATG3	LATG2	LATG1	LATG0	xxxx
6640	ODCG	31:16	—	—	—	—	—	—	—	—	—	—	—	—	—	—	—	—	0000
		15:0	ODCG15	ODCG14	ODCG13	ODCG12	—	—	ODCG9	ODCG8	ODCG7	ODCG6	—	—	ODCG3	ODCG2	ODCG1	ODCG0	0000
6650	CNPUG	31:16	—	—	—	—	—	—	—	—	—	—	—	—	—	—	—	—	0000
		15:0	CNPUG15	CNPUG14	CNPUG13	CNPUG12	—	—	CNPUG9	CNPUG8	CNPUG7	CNPUG6	—	—	CNPUG3	CNPUG2	CNPUG1	CNPUG0	0000
6660	CNPDG	31:16	—	—	—	—	—	—	—	—	—	—	—	—	—	—	—	—	0000
		15:0	CNPDG15	CNPDG14	CNPDG13	CNPDG12	—	—	CNPDG9	CNPDG8	CNPDG7	CNPDG6	—	—	CNPDG3	CNPDG2	CNPDG1	CNPDG0	0000
6670	CNCONG	31:16	—	—	—	—	—	—	—	—	—	—	—	—	—	—	—	—	0000
		15:0	ON	—	SIDL	—	—	—	—	—	—	—	—	—	—	—	—	—	0000
6680	CNENG	31:16	—	—	—	—	—	—	—	—	—	—	—	—	—	—	—	—	0000
		15:0	CNIEG15	CNIEG14	CNIEG13	CNIEG12	—	—	CNIEG9	CNIEG8	CNIEG7	CNIEG6	—	—	CNIEG3	CNIEG2	CNIEG1	CNIEG0	0000
6690	CNSTATG	31:16	—	—	—	—	—	—	—	—	—	—	—	—	—	—	—	—	0000
		15:0	CN STATG15	CN STATG14	CN STATG13	CN STATG12	—	—	CN STATG9	CN STATG8	CN STATG7	CN STATG6	—	—	CN STATG3	CN STATG2	CN STATG1	CN STATG0	0000

Legend: x = Unknown value on Reset; — = Unimplemented, read as '0'; Reset values are shown in hexadecimal.

Note 1: All registers in this table have corresponding CLR, SET and INV registers at its virtual address, plus an offset of 0x4, 0x8 and 0xC, respectively. See **Section 11.2 "CLR, SET, and INV Registers"** for more information.

2: This bit is only available on devices without a USB module.

© 2014-2019 Microchip Technology Inc.

TABLE 11-16: PORTG REGISTER MAP FOR 64-PIN DEVICES ONLY

Virtual Address (BF88_#)	Register Name(1)	Bit Range	Bits																All Resets
			31/15	30/14	29/13	28/12	27/11	26/10	25/9	24/8	23/7	22/6	21/5	20/4	19/3	18/2	17/1	16/0	
6600	ANSELG	31:16	—	—	—	—	—	—	—	—	—	—	—	—	—	—	—	—	0000
		15:0	—	—	—	—	—	—	ANSELG9	ANSELG8	ANSELG7	ANSELG6	—	—	—	—	—	—	03C0
6610	TRISG	31:16	—	—	—	—	—	—	—	—	—	—	—	—	—	—	—	—	0000
		15:0	—	—	—	—	—	—	TRISG9	TRISG8	TRISG7	TRISG6	—	—	TRISG3	TRISG2	—	—	03CC
6620	PORTG	31:16	—	—	—	—	—	—	—	—	—	—	—	—	—	—	—	—	0000
		15:0	—	—	—	—	—	—	RG9	RG8	RG7	RG6	—	—	RG3(2)	RG2(2)	—	—	xxxx
6630	LATG	31:16	—	—	—	—	—	—	—	—	—	—	—	—	—	—	—	—	0000
		15:0	—	—	—	—	—	—	LATG9	LATG8	LATG7	LATG6	—	—	LATG3	LATG2	—	—	xxxx
6640	ODCG	31:16	—	—	—	—	—	—	—	—	—	—	—	—	—	—	—	—	0000
		15:0	—	—	—	—	—	—	ODCG9	ODCG8	ODCG7	ODCG6	—	—	ODCG3	ODCG2	—	—	0000
6650	CNPUG	31:16	—	—	—	—	—	—	—	—	—	—	—	—	—	—	—	—	0000
		15:0	—	—	—	—	—	—	CNPUG9	CNPUG8	CNPUG7	CNPUG6	—	—	CNPUG3	CNPUG2	—	—	0000
6660	CNPDG	31:16	—	—	—	—	—	—	—	—	—	—	—	—	—	—	—	—	0000
		15:0	—	—	—	—	—	—	CNPDG9	CNPDG8	CNPDG7	CNPDG6	—	—	CNPDG3	CNPDG2	—	—	0000
6670	CNCONG	31:16	—	—	—	—	—	—	—	—	—	—	—	—	—	—	—	—	0000
		15:0	ON	—	SIDL	—	—	—	—	—	—	—	—	—	—	—	—	—	0000
6680	CNENG	31:16	—	—	—	—	—	—	—	—	—	—	—	—	—	—	—	—	0000
		15:0	—	—	—	—	—	—	CNIEG9	CNIEG8	CNIEG7	CNIEG6	—	—	CNIEG3	CNIEG2	—	—	0000
6690	CNSTATG	31:16	—	—	—	—	—	—	—	—	—	—	—	—	—	—	—	—	0000
		15:0	—	—	—	—	—	—	CN STATG9	CN STATG8	CN STATG7	CN STATG6	—	—	CN STATG3	CN STATG2	—	—	0000

Legend: x = Unknown value on Reset; — = Unimplemented, read as '0'; Reset values are shown in hexadecimal.

Note 1: All registers in this table have corresponding CLR, SET and INV registers at its virtual address, plus an offset of 0x4, 0x8 and 0xC, respectively. See **Section 11.2 "CLR, SET, and INV Registers"** for more information.

2: This bit is only available on devices without a USB module.

© 2014-2019 Microchip Technology Inc.

TABLE 11-17: PERIPHERAL PIN SELECT INPUT REGISTER MAP

Virtual Address (BF80_#)	Register Name	Bit Range	Bits																All Resets
			31/15	30/14	29/13	28/12	27/11	26/10	25/9	24/8	23/7	22/6	21/5	20/4	19/3	18/2	17/1	16/0	
FA04	INT1R	31:16	—	—	—	—	—	—	—	—	—	—	—	—	—	—	—	—	0000
		15:0	—	—	—	—	—	—	—	—	—	—	—	—	INT1R<3:0>				0000
FA08	INT2R	31:16	—	—	—	—	—	—	—	—	—	—	—	—	—	—	—	—	0000
		15:0	—	—	—	—	—	—	—	—	—	—	—	—	INT2R<3:0>				0000
FA0C	INT3R	31:16	—	—	—	—	—	—	—	—	—	—	—	—	—	—	—	—	0000
		15:0	—	—	—	—	—	—	—	—	—	—	—	—	INT3R<3:0>				0000
FA10	INT4R	31:16	—	—	—	—	—	—	—	—	—	—	—	—	—	—	—	—	0000
		15:0	—	—	—	—	—	—	—	—	—	—	—	—	INT4R<3:0>				0000
FA18	T2CKR	31:16	—	—	—	—	—	—	—	—	—	—	—	—	—	—	—	—	0000
		15:0	—	—	—	—	—	—	—	—	—	—	—	—	T2CKR<3:0>				0000
FA1C	T3CKR	31:16	—	—	—	—	—	—	—	—	—	—	—	—	—	—	—	—	0000
		15:0	—	—	—	—	—	—	—	—	—	—	—	—	T3CKR<3:0>				0000
FA20	T4CKR	31:16	—	—	—	—	—	—	—	—	—	—	—	—	—	—	—	—	0000
		15:0	—	—	—	—	—	—	—	—	—	—	—	—	T4CKR<3:0>				0000
FA24	T5CKR	31:16	—	—	—	—	—	—	—	—	—	—	—	—	—	—	—	—	0000
		15:0	—	—	—	—	—	—	—	—	—	—	—	—	T5CKR<3:0>				0000
FA28	IC1R	31:16	—	—	—	—	—	—	—	—	—	—	—	—	—	—	—	—	0000
		15:0	—	—	—	—	—	—	—	—	—	—	—	—	IC1R<3:0>				0000
FA2C	IC2R	31:16	—	—	—	—	—	—	—	—	—	—	—	—	—	—	—	—	0000
		15:0	—	—	—	—	—	—	—	—	—	—	—	—	IC2R<3:0>				0000
FA30	IC3R	31:16	—	—	—	—	—	—	—	—	—	—	—	—	—	—	—	—	0000
		15:0	—	—	—	—	—	—	—	—	—	—	—	—	IC3R<3:0>				0000
FA34	IC4R	31:16	—	—	—	—	—	—	—	—	—	—	—	—	—	—	—	—	0000
		15:0	—	—	—	—	—	—	—	—	—	—	—	—	IC4R<3:0>				0000
FA38	IC5R	31:16	—	—	—	—	—	—	—	—	—	—	—	—	—	—	—	—	0000
		15:0	—	—	—	—	—	—	—	—	—	—	—	—	IC5R<3:0>				0000
FA48	OCFAR	31:16	—	—	—	—	—	—	—	—	—	—	—	—	—	—	—	—	0000
		15:0	—	—	—	—	—	—	—	—	—	—	—	—	OCFAR<3:0>				0000
FA50	U1RXR	31:16	—	—	—	—	—	—	—	—	—	—	—	—	—	—	—	—	0000
		15:0	—	—	—	—	—	—	—	—	—	—	—	—	U1RXR<3:0>				0000
FA54	U1CTSR	31:16	—	—	—	—	—	—	—	—	—	—	—	—	—	—	—	—	0000
		15:0	—	—	—	—	—	—	—	—	—	—	—	—	U1CTSR<3:0>				0000
FA58	U2RXR	31:16	—	—	—	—	—	—	—	—	—	—	—	—	—	—	—	—	0000
		15:0	—	—	—	—	—	—	—	—	—	—	—	—	U2RXR<3:0>				0000

Legend: x = unknown value on Reset; — = unimplemented, read as '0'. Reset values are shown in hexadecimal.

© 2014-2019 Microchip Technology Inc.

TABLE 11-17: PERIPHERAL PIN SELECT INPUT REGISTER MAP (CONTINUED)

Virtual Address (BF80_#)	Register Name	Bit Range	Bits																All Resets
			31/15	30/14	29/13	28/12	27/11	26/10	25/9	24/8	23/7	22/6	21/5	20/4	19/3	18/2	17/1	16/0	
FA5C	U2CTSR	31:16	—	—	—	—	—	—	—	—	—	—	—	—	—	—	—	—	0000
		15:0	—	—	—	—	—	—	—	—	—	—	—	—	U2CTSR<3:0>				0000
FA60	U3RXR	31:16	—	—	—	—	—	—	—	—	—	—	—	—	—	—	—	—	0000
		15:0	—	—	—	—	—	—	—	—	—	—	—	—	U3RXR<3:0>				0000
FA64	U3CTSR	31:16	—	—	—	—	—	—	—	—	—	—	—	—	—	—	—	—	0000
		15:0	—	—	—	—	—	—	—	—	—	—	—	—	U3CTSR<3:0>				0000
FA68	U4RXR	31:16	—	—	—	—	—	—	—	—	—	—	—	—	—	—	—	—	0000
		15:0	—	—	—	—	—	—	—	—	—	—	—	—	U4RXR<3:0>				0000
FA6C	U4CTSR	31:16	—	—	—	—	—	—	—	—	—	—	—	—	—	—	—	—	0000
		15:0	—	—	—	—	—	—	—	—	—	—	—	—	U4CTSR<3:0>				0000
FA70	U5RXR	31:16	—	—	—	—	—	—	—	—	—	—	—	—	—	—	—	—	0000
		15:0	—	—	—	—	—	—	—	—	—	—	—	—	U5RXR<3:0>				0000
FA74	U5CTSR	31:16	—	—	—	—	—	—	—	—	—	—	—	—	—	—	—	—	0000
		15:0	—	—	—	—	—	—	—	—	—	—	—	—	U5CTSR<3:0>				0000
FA84	SDI1R	31:16	—	—	—	—	—	—	—	—	—	—	—	—	—	—	—	—	0000
		15:0	—	—	—	—	—	—	—	—	—	—	—	—	SDI1R<3:0>				0000
FA88	SS1R	31:16	—	—	—	—	—	—	—	—	—	—	—	—	—	—	—	—	0000
		15:0	—	—	—	—	—	—	—	—	—	—	—	—	SS1R<3:0>				0000
FA90	SDI2R	31:16	—	—	—	—	—	—	—	—	—	—	—	—	—	—	—	—	0000
		15:0	—	—	—	—	—	—	—	—	—	—	—	—	SDI2R<3:0>				0000
FA94	SS2R	31:16	—	—	—	—	—	—	—	—	—	—	—	—	—	—	—	—	0000
		15:0	—	—	—	—	—	—	—	—	—	—	—	—	SS2R<3:0>				0000
FA9C	SDI3R	31:16	—	—	—	—	—	—	—	—	—	—	—	—	—	—	—	—	0000
		15:0	—	—	—	—	—	—	—	—	—	—	—	—	SDI3R<3:0>				0000
FAA0	SS3R	31:16	—	—	—	—	—	—	—	—	—	—	—	—	—	—	—	—	0000
		15:0	—	—	—	—	—	—	—	—	—	—	—	—	SS3R<3:0>				0000
FAA8	SDI4R	31:16	—	—	—	—	—	—	—	—	—	—	—	—	—	—	—	—	0000
		15:0	—	—	—	—	—	—	—	—	—	—	—	—	SDI4R<3:0>				0000
FAAC	SS4R	31:16	—	—	—	—	—	—	—	—	—	—	—	—	—	—	—	—	0000
		15:0	—	—	—	—	—	—	—	—	—	—	—	—	SS4R<3:0>				0000
FAC8	C1RXR	31:16	—	—	—	—	—	—	—	—	—	—	—	—	—	—	—	—	0000
		15:0	—	—	—	—	—	—	—	—	—	—	—	—	C1RXR<3:0>				0000
FAD0	REFCLKIR	31:16	—	—	—	—	—	—	—	—	—	—	—	—	—	—	—	—	0000
		15:0	—	—	—	—	—	—	—	—	—	—	—	—	REFCLKIR<3:0>				0000

Legend: x = unknown value on Reset; — = unimplemented, read as '0'. Reset values are shown in hexadecimal.

© 2014-2019 Microchip Technology Inc.

TABLE 11-18: PERIPHERAL PIN SELECT OUTPUT REGISTER MAP

Virtual Address (BF80_#)	Register Name	Bit Range	Bits																All Resets
			31/15	30/14	29/13	28/12	27/11	26/10	25/9	24/8	23/7	22/6	21/5	20/4	19/3	18/2	17/1	16/0	
FB38	RPA14R	31:16	—	—	—	—	—	—	—	—	—	—	—	—	—	—	—	—	0000
		15:0	—	—	—	—	—	—	—	—	—	—	—	—	RPA14<3:0>				0000
FB3C	RPA15R	31:16	—	—	—	—	—	—	—	—	—	—	—	—	—	—	—	—	0000
		15:0	—	—	—	—	—	—	—	—	—	—	—	—	RPA15<3:0>				0000
FB40	RPB0R	31:16	—	—	—	—	—	—	—	—	—	—	—	—	—	—	—	—	0000
		15:0	—	—	—	—	—	—	—	—	—	—	—	—	RPB0<3:0>				0000
FB44	RPB1R	31:16	—	—	—	—	—	—	—	—	—	—	—	—	—	—	—	—	0000
		15:0	—	—	—	—	—	—	—	—	—	—	—	—	RPB1<3:0>				0000
FB48	RPB2R	31:16	—	—	—	—	—	—	—	—	—	—	—	—	—	—	—	—	0000
		15:0	—	—	—	—	—	—	—	—	—	—	—	—	RPB2<3:0>				0000
FB4C	RPB3R	31:16	—	—	—	—	—	—	—	—	—	—	—	—	—	—	—	—	0000
		15:0	—	—	—	—	—	—	—	—	—	—	—	—	RPB3<3:0>				0000
FB54	RPB5R	31:16	—	—	—	—	—	—	—	—	—	—	—	—	—	—	—	—	0000
		15:0	—	—	—	—	—	—	—	—	—	—	—	—	RPB5<3:0>				0000
FB58	RPB6R	31:16	—	—	—	—	—	—	—	—	—	—	—	—	—	—	—	—	0000
		15:0	—	—	—	—	—	—	—	—	—	—	—	—	RPB6<3:0>				0000
FB5C	RPB7R	31:16	—	—	—	—	—	—	—	—	—	—	—	—	—	—	—	—	0000
		15:0	—	—	—	—	—	—	—	—	—	—	—	—	RPB7<3:0>				0000
FB60	RPB8R	31:16	—	—	—	—	—	—	—	—	—	—	—	—	—	—	—	—	0000
		15:0	—	—	—	—	—	—	—	—	—	—	—	—	RPB8<3:0>				0000
FB64	RPB9R	31:16	—	—	—	—	—	—	—	—	—	—	—	—	—	—	—	—	0000
		15:0	—	—	—	—	—	—	—	—	—	—	—	—	RPB9<3:0>				0000
FB68	RPB10R	31:16	—	—	—	—	—	—	—	—	—	—	—	—	—	—	—	—	0000
		15:0	—	—	—	—	—	—	—	—	—	—	—	—	RPB10<3:0>				0000
FB78	RPB14R	31:16	—	—	—	—	—	—	—	—	—	—	—	—	—	—	—	—	0000
		15:0	—	—	—	—	—	—	—	—	—	—	—	—	RPB14<3:0>				0000
FB7C	RPB15R	31:16	—	—	—	—	—	—	—	—	—	—	—	—	—	—	—	—	0000
		15:0	—	—	—	—	—	—	—	—	—	—	—	—	RPB15<3:0>				0000
FB84	RPC1R	31:16	—	—	—	—	—	—	—	—	—	—	—	—	—	—	—	—	0000
		15:0	—	—	—	—	—	—	—	—	—	—	—	—	RPC1<3:0>				0000

Legend: x = unknown value on Reset; — = unimplemented, read as '0'. Reset values are shown in hexadecimal.

Note 1: This register is not available if the associated RPx function is not present on the device. Refer to the pin table for the specific device to determine availability.

© 2014-2019 Microchip Technology Inc.

TABLE 11-18: PERIPHERAL PIN SELECT OUTPUT REGISTER MAP (CONTINUED)

Virtual Address (BF80_#)	Register Name	Bit Range	Bits																All Resets
			31/15	30/14	29/13	28/12	27/11	26/10	25/9	24/8	23/7	22/6	21/5	20/4	19/3	18/2	17/1	16/0	
FB88	RPC2R	31:16	—	—	—	—	—	—	—	—	—	—	—	—	—	—	—	—	0000
		15:0	—	—	—	—	—	—	—	—	—	—	—	—	RPC2<3:0>				0000
FB8C	RPC3R	31:16	—	—	—	—	—	—	—	—	—	—	—	—	—	—	—	—	0000
		15:0	—	—	—	—	—	—	—	—	—	—	—	—	RPC3<3:0>				0000
FB90	RPC4R	31:16	—	—	—	—	—	—	—	—	—	—	—	—	—	—	—	—	0000
		15:0	—	—	—	—	—	—	—	—	—	—	—	—	RPC4<3:0>				0000
FBB4	RPC13R	31:16	—	—	—	—	—	—	—	—	—	—	—	—	—	—	—	—	0000
		15:0	—	—	—	—	—	—	—	—	—	—	—	—	RPC13<3:0>				0000
FBB8	RPC14R	31:16	—	—	—	—	—	—	—	—	—	—	—	—	—	—	—	—	0000
		15:0	—	—	—	—	—	—	—	—	—	—	—	—	RPC14<3:0>				0000
FBC0	RPD0R	31:16	—	—	—	—	—	—	—	—	—	—	—	—	—	—	—	—	0000
		15:0	—	—	—	—	—	—	—	—	—	—	—	—	RPD0<3:0>				0000
FBC4	RPD1R	31:16	—	—	—	—	—	—	—	—	—	—	—	—	—	—	—	—	0000
		15:0	—	—	—	—	—	—	—	—	—	—	—	—	RPD1<3:0>				0000
FBC8	RPD2R	31:16	—	—	—	—	—	—	—	—	—	—	—	—	—	—	—	—	0000
		15:0	—	—	—	—	—	—	—	—	—	—	—	—	RPD2<3:0>				0000
FBCC	RPD3R	31:16	—	—	—	—	—	—	—	—	—	—	—	—	—	—	—	—	0000
		15:0	—	—	—	—	—	—	—	—	—	—	—	—	RPD3<3:0>				0000
FBD0	RPD4R	31:16	—	—	—	—	—	—	—	—	—	—	—	—	—	—	—	—	0000
		15:0	—	—	—	—	—	—	—	—	—	—	—	—	RPD4<3:0>				0000
FBD4	RPD5R	31:16	—	—	—	—	—	—	—	—	—	—	—	—	—	—	—	—	0000
		15:0	—	—	—	—	—	—	—	—	—	—	—	—	RPD5<3:0>				0000
FBE0	RPD8R	31:16	—	—	—	—	—	—	—	—	—	—	—	—	—	—	—	—	0000
		15:0	—	—	—	—	—	—	—	—	—	—	—	—	RPD8<3:0>				0000
FBE4	RPD9R	31:16	—	—	—	—	—	—	—	—	—	—	—	—	—	—	—	—	0000
		15:0	—	—	—	—	—	—	—	—	—	—	—	—	RPD9<3:0>				0000
FBE8	RPD10R	31:16	—	—	—	—	—	—	—	—	—	—	—	—	—	—	—	—	0000
		15:0	—	—	—	—	—	—	—	—	—	—	—	—	RPD10<3:0>				0000
FBEC	RPD11R	31:16	—	—	—	—	—	—	—	—	—	—	—	—	—	—	—	—	0000
		15:0	—	—	—	—	—	—	—	—	—	—	—	—	RPD11<3:0>				0000
FBF0	RPD12R	31:16	—	—	—	—	—	—	—	—	—	—	—	—	—	—	—	—	0000
		15:0	—	—	—	—	—	—	—	—	—	—	—	—	RPD12<3:0>				0000
FBF8	RPD14R	31:16	—	—	—	—	—	—	—	—	—	—	—	—	—	—	—	—	0000
		15:0	—	—	—	—	—	—	—	—	—	—	—	—	RPD14<3:0>				0000

Legend: x = unknown value on Reset; — = unimplemented, read as '0'. Reset values are shown in hexadecimal.

Note 1: This register is not available if the associated RPx function is not present on the device. Refer to the pin table for the specific device to determine availability.

© 2014-2019 Microchip Technology Inc.

TABLE 11-18: PERIPHERAL PIN SELECT OUTPUT REGISTER MAP (CONTINUED)

Virtual Address (BF80_#)	Register Name	Bit Range	Bits																All Resets
			31/15	30/14	29/13	28/12	27/11	26/10	25/9	24/8	23/7	22/6	21/5	20/4	19/3	18/2	17/1	16/0	
FBFC	RPD15R	31:16	—	—	—	—	—	—	—	—	—	—	—	—	—	—	—	—	0000
		15:0	—	—	—	—	—	—	—	—	—	—	—	—	RPD15<3:0>				0000
FC0C	RPE3R	31:16	—	—	—	—	—	—	—	—	—	—	—	—	—	—	—	—	0000
		15:0	—	—	—	—	—	—	—	—	—	—	—	—	RPE3<3:0>				0000
FC14	RPE5R	31:16	—	—	—	—	—	—	—	—	—	—	—	—	—	—	—	—	0000
		15:0	—	—	—	—	—	—	—	—	—	—	—	—	RPE5<3:0>				0000
FC20	RPE8R	31:16	—	—	—	—	—	—	—	—	—	—	—	—	—	—	—	—	0000
		15:0	—	—	—	—	—	—	—	—	—	—	—	—	RPE8<3:0>				0000
FC24	RPE9R	31:16	—	—	—	—	—	—	—	—	—	—	—	—	—	—	—	—	0000
		15:0	—	—	—	—	—	—	—	—	—	—	—	—	RPE9<3:0>				0000
FC40	RPF0R	31:16	—	—	—	—	—	—	—	—	—	—	—	—	—	—	—	—	0000
		15:0	—	—	—	—	—	—	—	—	—	—	—	—	RPF0<3:0>				0000
FC44	RPF1R	31:16	—	—	—	—	—	—	—	—	—	—	—	—	—	—	—	—	0000
		15:0	—	—	—	—	—	—	—	—	—	—	—	—	RPF1<3:0>				0000
FC48	RPF2R	31:16	—	—	—	—	—	—	—	—	—	—	—	—	—	—	—	—	0000
		15:0	—	—	—	—	—	—	—	—	—	—	—	—	RPF2<3:0>				0000
FC4C	RPF3R	31:16	—	—	—	—	—	—	—	—	—	—	—	—	—	—	—	—	0000
		15:0	—	—	—	—	—	—	—	—	—	—	—	—	RPF3<3:0>				0000
FC50	RPF4R	31:16	—	—	—	—	—	—	—	—	—	—	—	—	—	—	—	—	0000
		15:0	—	—	—	—	—	—	—	—	—	—	—	—	RPF4<3:0>				0000
FC54	RPF5R	31:16	—	—	—	—	—	—	—	—	—	—	—	—	—	—	—	—	0000
		15:0	—	—	—	—	—	—	—	—	—	—	—	—	RPF5<3:0>				0000
FC58	RPF6R	31:16	—	—	—	—	—	—	—	—	—	—	—	—	—	—	—	—	0000
		15:0	—	—	—	—	—	—	—	—	—	—	—	—	RPF6<3:0>				0000
FC5C	RPF7R	31:16	—	—	—	—	—	—	—	—	—	—	—	—	—	—	—	—	0000
		15:0	—	—	—	—	—	—	—	—	—	—	—	—	RPF6<3:0>				0000
FC60	RPF8R	31:16	—	—	—	—	—	—	—	—	—	—	—	—	—	—	—	—	0000
		15:0	—	—	—	—	—	—	—	—	—	—	—	—	RPF7<3:0>				0000
FC70	RPF12R	31:16	—	—	—	—	—	—	—	—	—	—	—	—	—	—	—	—	0000
		15:0	—	—	—	—	—	—	—	—	—	—	—	—	RPF12<3:0>				0000
FC74	RPF13R	31:16	—	—	—	—	—	—	—	—	—	—	—	—	—	—	—	—	0000
		15:0	—	—	—	—	—	—	—	—	—	—	—	—	RPF13<3:0>				0000
FC80	RPG0R	31:16	—	—	—	—	—	—	—	—	—	—	—	—	—	—	—	—	0000
		15:0	—	—	—	—	—	—	—	—	—	—	—	—	RPG0<3:0>				0000

Legend: x = unknown value on Reset; — = unimplemented, read as '0'. Reset values are shown in hexadecimal.

Note 1: This register is not available if the associated RPx function is not present on the device. Refer to the pin table for the specific device to determine availability.

© 2014-2019 Microchip Technology Inc.

TABLE 11-18: PERIPHERAL PIN SELECT OUTPUT REGISTER MAP (CONTINUED)

Virtual Address (BF80_#)	Register Name	Bit Range	Bits																All Resets
			31/15	30/14	29/13	28/12	27/11	26/10	25/9	24/8	23/7	22/6	21/5	20/4	19/3	18/2	17/1	16/0	
FC84	RPG1R	31:16	—	—	—	—	—	—	—	—	—	—	—	—	—	—	—	—	0000
		15:0	—	—	—	—	—	—	—	—	—	—	—	—	RPG1<3:0>				0000
FC98	RPG6R	31:16	—	—	—	—	—	—	—	—	—	—	—	—	—	—	—	—	0000
		15:0	—	—	—	—	—	—	—	—	—	—	—	—	RPG6<3:0>				0000
FC9C	RPG7R	31:16	—	—	—	—	—	—	—	—	—	—	—	—	—	—	—	—	0000
		15:0	—	—	—	—	—	—	—	—	—	—	—	—	RPG7<3:0>				0000
FCA0	RPG8R	31:16	—	—	—	—	—	—	—	—	—	—	—	—	—	—	—	—	0000
		15:0	—	—	—	—	—	—	—	—	—	—	—	—	RPG8<3:0>				0000
FCA4	RPG9R	31:16	—	—	—	—	—	—	—	—	—	—	—	—	—	—	—	—	0000
		15:0	—	—	—	—	—	—	—	—	—	—	—	—	RPG9<3:0>				0000

Legend: x = unknown value on Reset; — = unimplemented, read as '0'. Reset values are shown in hexadecimal.

Note 1: This register is not available if the associated RPx function is not present on the device. Refer to the pin table for the specific device to determine availability.

© 2014-2019 Microchip Technology Inc.

REGISTER 11-1: [*pin name*]R: PERIPHERAL PIN SELECT INPUT REGISTER

Bit Range	Bit 31/23/15/7	Bit 30/22/14/6	Bit 29/21/13/5	Bit 28/20/12/4	Bit 27/19/11/3	Bit 26/18/10/2	Bit 25/17/9/1	Bit 24/16/8/0
31:24	U-0	U-0	U-0	U-0	U-0	U-0	U-0	U-0
	—	—	—	—	—	—	—	—
23:16	U-0	U-0	U-0	U-0	U-0	U-0	U-0	U-0
	—	—	—	—	—	—	—	—
15:8	U-0	U-0	U-0	U-0	U-0	U-0	U-0	U-0
	—	—	—	—	—	—	—	—
7:0	U-0	U-0	U-0	U-0	R/W-0	R/W-0	R/W-0	R/W-0
	—	—	—	—	[*pin name*]R<3:0>			

Legend:			
R = Readable bit	W = Writable bit	U = Unimplemented bit, read as ‘0’	
-n = Value at POR	‘1’ = Bit is set	‘0’ = Bit is cleared	x = Bit is unknown

bit 31-4 **Unimplemented:** Read as ‘0’

bit 3-0 **[*pin name*]R<3:0>:** Peripheral Pin Select Input bits
Where [*pin name*] refers to the pins that are used to configure peripheral input mapping. See Table 11-1 for input pin selection values.

Note: Register values can only be changed if the IOLOCK Configuration bit (CFGCON<13>) = 0.

REGISTER 11-2: RPnR: PERIPHERAL PIN SELECT OUTPUT REGISTER

Bit Range	Bit 31/23/15/7	Bit 30/22/14/6	Bit 29/21/13/5	Bit 28/20/12/4	Bit 27/19/11/3	Bit 26/18/10/2	Bit 25/17/9/1	Bit 24/16/8/0
31:24	U-0	U-0	U-0	U-0	U-0	U-0	U-0	U-0
	—	—	—	—	—	—	—	—
23:16	U-0	U-0	U-0	U-0	U-0	U-0	U-0	U-0
	—	—	—	—	—	—	—	—
15:8	U-0	U-0	U-0	U-0	U-0	U-0	U-0	U-0
	—	—	—	—	—	—	—	—
7:0	U-0	U-0	U-0	U-0	R/W-0	R/W-0	R/W-0	R/W-0
	—	—	—	—	RPnR<3:0>			

Legend:			
R = Readable bit	W = Writable bit	U = Unimplemented bit, read as ‘0’	
-n = Value at POR	‘1’ = Bit is set	‘0’ = Bit is cleared	x = Bit is unknown

bit 31-4 **Unimplemented:** Read as ‘0’

bit 3-0 **RPnR<3:0>:** Peripheral Pin Select Output bits
See Table 11-2 for output pin selection values.

Note: Register values can only be changed if the IOLOCK Configuration bit (CFGCON<13>) = 0.

REGISTER 11-3: CNCONx: CHANGE NOTICE CONTROL FOR PORTx REGISTER (x = A – G)

Bit Range	Bit 31/23/15/7	Bit 30/22/14/6	Bit 29/21/13/5	Bit 28/20/12/4	Bit 27/19/11/3	Bit 26/18/10/2	Bit 25/17/9/1	Bit 24/16/8/0
31:24	U-0	U-0	U-0	U-0	U-0	U-0	U-0	U-0
	—	—	—	—	—	—	—	—
23:16	U-0	U-0	U-0	U-0	U-0	U-0	U-0	U-0
	—	—	—	—	—	—	—	—
15:8	R/W-0	U-0	R/W-0	U-0	U-0	U-0	U-0	U-0
	ON	—	SIDL	—	—	—	—	—
7:0	U-0	U-0	U-0	U-0	U-0	U-0	U-0	U-0
	—	—	—	—	—	—	—	—

Legend:			
R = Readable bit	W = Writable bit	U = Unimplemented bit, read as ‘0’	
-n = Value at POR	‘1’ = Bit is set	‘0’ = Bit is cleared	x = Bit is unknown

bit 31-16 **Unimplemented:** Read as ‘0’

bit 15 **ON:** Change Notice (CN) Control ON bit
1 = CN is enabled
0 = CN is disabled

bit 14 **Unimplemented:** Read as ‘0’

bit 13 **SIDL:** Stop in Idle Control bit
1 = CPU Idle Mode halts CN operation
0 = CPU Idle does not affect CN operation

bit 12-0 **Unimplemented:** Read as ‘0’

© 2014-2019 Microchip Technology Inc.

12.0 TIMER1

Note: This data sheet summarizes the features of the PIC32MX1XX/2XX/5XX 64/100-pin family of devices. It is not intended to be a comprehensive reference source. To complement the information in this data sheet, refer to **Section 14. "Timers"** (DS60001105) in the *"PIC32 Family Reference Manual"*, which is available from the Microchip web site (www.microchip.com/PIC32).

This family of PIC32 devices features one synchronous/asynchronous 16-bit timer that can operate as a free-running interval timer for various timing applications and counting external events. This timer can also be used with the Low-Power Secondary Oscillator (SOSC) for Real-Time Clock (RTC) applications. The following modes are supported:

- Synchronous Internal Timer
- Synchronous Internal Gated Timer
- Synchronous External Timer
- Asynchronous External Timer

12.1 Additional Supported Features

- Selectable clock prescaler
- Timer operation during CPU Idle and Sleep mode
- Fast bit manipulation using CLR, SET and INV registers
- Asynchronous mode can be used with the SOSC to function as a Real-Time Clock (RTC)

FIGURE 12-1: TIMER1 BLOCK DIAGRAM

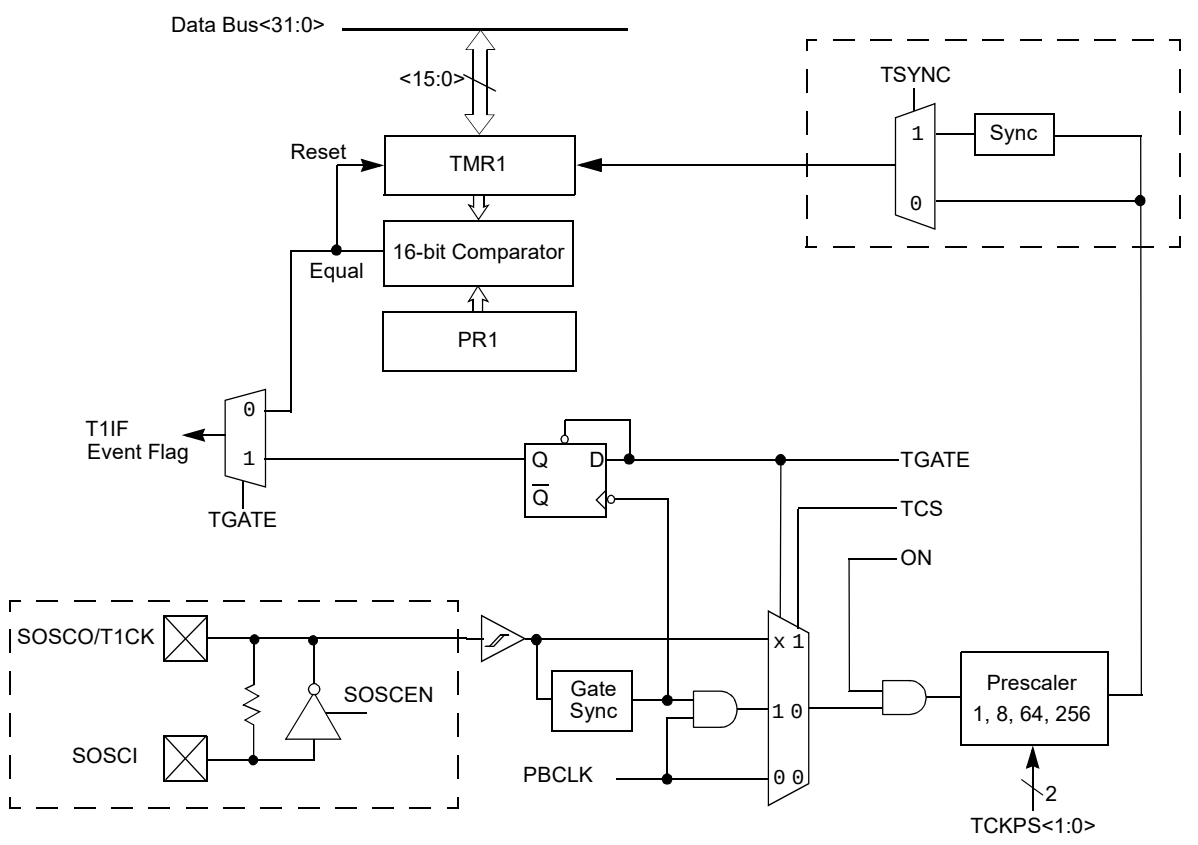

Note: The default state of the SOSCEN (OSCCON<1>) bit during a device Reset is controlled by the FSOSCEN bit in Configuration Word, DEVCFG1.

12.2 Control Registers

TABLE 12-1: TIMER1 REGISTER MAP

Virtual Address (BF80_#)	Register Name(1)	Bit Range	Bits																All Resets
			31/15	30/14	29/13	28/12	27/11	26/10	25/9	24/8	23/7	22/6	21/5	20/4	19/3	18/2	17/1	16/0	
0600	T1CON	31:16	—	—	—	—	—	—	—	—	—	—	—	—	—	—	—	—	0000
		15:0	ON	—	SIDL	TWDIS	TWIP	—	—	—	TGATE	—	TCKPS<1:0>		—	TSYNC	TCS	—	0000
0610	TMR1	31:16	—	—	—	—	—	—	—	—	—	—	—	—	—	—	—	—	0000
		15:0	TMR1<15:0>																0000
0620	PR1	31:16	—	—	—	—	—	—	—	—	—	—	—	—	—	—	—	—	0000
		15:0	PR1<15:0>																FFFF

Legend: x = unknown value on Reset; — = unimplemented, read as ‘0’. Reset values are shown in hexadecimal.

Note 1: All registers in this table have corresponding CLR, SET and INV registers at their virtual addresses, plus offsets of 0x4, 0x8 and 0xC, respectively. See **Section 11.2 “CLR, SET, and INV Registers”** for more information.

© 2014-2019 Microchip Technology Inc.

REGISTER 12-1: T1CON: TYPE A TIMER CONTROL REGISTER

Bit Range	Bit 31/23/15/7	Bit 30/22/14/6	Bit 29/21/13/5	Bit 28/20/12/4	Bit 27/19/11/3	Bit 26/18/10/2	Bit 25/17/9/1	Bit 24/16/8/0
31:24	U-0	U-0	U-0	U-0	U-0	U-0	U-0	U-0
	—	—	—	—	—	—	—	—
23:16	U-0	U-0	U-0	U-0	U-0	U-0	U-0	U-0
	—	—	—	—	—	—	—	—
15:8	R/W-0	U-0	R/W-0	R/W-0	R-0	U-0	U-0	U-0
	ON(1)	—	SIDL	TWDIS	TWIP	—	—	—
7:0	R/W-0	U-0	R/W-0	R/W-0	U-0	R/W-0	R/W-0	U-0
	TGATE	—	TCKPS<1:0>		—	TSYNC	TCS	—

Legend:			
R = Readable bit	W = Writable bit	U = Unimplemented bit, read as ‘0’	
-n = Value at POR	‘1’ = Bit is set	‘0’ = Bit is cleared	x = Bit is unknown

bit 31-16 **Unimplemented:** Read as ‘0’

bit 15 **ON:** Timer On bit(1)
1 = Timer is enabled
0 = Timer is disabled

bit 14 **Unimplemented:** Read as ‘0’

bit 13 **SIDL:** Stop in Idle Mode bit
1 = Discontinue operation when device enters Idle mode
0 = Continue operation even in Idle mode

bit 12 **TWDIS:** Asynchronous Timer Write Disable bit
1 = Writes to TMR1 are ignored until pending write operation completes
0 = Back-to-back writes are enabled (Legacy Asynchronous Timer functionality)

bit 11 **TWIP:** Asynchronous Timer Write in Progress bit
In Asynchronous Timer mode:
1 = Asynchronous write to TMR1 register in progress
0 = Asynchronous write to TMR1 register complete
In Synchronous Timer mode:
This bit is read as ‘0’.

bit 10-8 **Unimplemented:** Read as ‘0’

bit 7 **TGATE:** Timer Gated Time Accumulation Enable bit
When TCS = 1:
This bit is ignored.
When TCS = 0:
1 = Gated time accumulation is enabled
0 = Gated time accumulation is disabled

bit 6 **Unimplemented:** Read as ‘0’

bit 5-4 **TCKPS<1:0>:** Timer Input Clock Prescale Select bits
11 = 1:256 prescale value
10 = 1:64 prescale value
01 = 1:8 prescale value
00 = 1:1 prescale value

bit 3 **Unimplemented:** Read as ‘0’

Note 1: When using 1:1 PBCLK divisor, the user’s software should not read/write the peripheral SFRs in the SYSCLK cycle immediately following the instruction that clears the module’s ON bit.

REGISTER 12-1: T1CON: TYPE A TIMER CONTROL REGISTER (CONTINUED)

bit 2 **TSYNC:** Timer External Clock Input Synchronization Selection bit

When TCS = 1:
1 = External clock input is synchronized
0 = External clock input is not synchronized

When TCS = 0:
This bit is ignored.

bit 1 **TCS:** Timer Clock Source Select bit

1 = External clock from TxCKI pin
0 = Internal peripheral clock

bit 0 **Unimplemented:** Read as '0'

Note 1: When using 1:1 PBCLK divisor, the user's software should not read/write the peripheral SFRs in the SYSCLK cycle immediately following the instruction that clears the module's ON bit.

© 2014-2019 Microchip Technology Inc.

13.0 TIMER2/3, TIMER4/5

Note: This data sheet summarizes the features of the PIC32MX1XX/2XX/5XX 64/100-pin family of devices. It is not intended to be a comprehensive reference source. To complement the information in this data sheet, refer to **Section 14. "Timers"** (DS60001105) of the *"PIC32 Family Reference Manual"*, which is available from the Microchip web site (www.microchip.com/PIC32).

This family of PIC32 devices features four synchronous 16-bit timers (default) that can operate as a free-running interval timer for various timing applications and counting external events. The following modes are supported:

- Synchronous internal 16-bit timer
- Synchronous internal 16-bit gated timer
- Synchronous external 16-bit timer

Two 32-bit synchronous timers are available by combining Timer2 with Timer3 and Timer4 with Timer5. The 32-bit timers can operate in three modes:

- Synchronous internal 32-bit timer
- Synchronous internal 32-bit gated timer
- Synchronous external 32-bit timer

Note: In this chapter, references to registers, TxCON, TMRx and PRx, use 'x' to represent Timer2 through 5 in 16-bit modes. In 32-bit modes, 'x' represents Timer2 or 4; 'y' represents Timer3 or 5.

13.1 Additional Supported Features

- Selectable clock prescaler
- Timers operational during CPU idle
- Time base for Input Capture and Output Compare modules (Timer2 and Timer3 only)
- ADC event trigger (Timer3 in 16-bit mode, Timer2/3 in 32-bit mode)
- Fast bit manipulation using CLR, SET and INV registers

FIGURE 13-1: TIMER2, 3, 4, 5 BLOCK DIAGRAM (16-BIT)

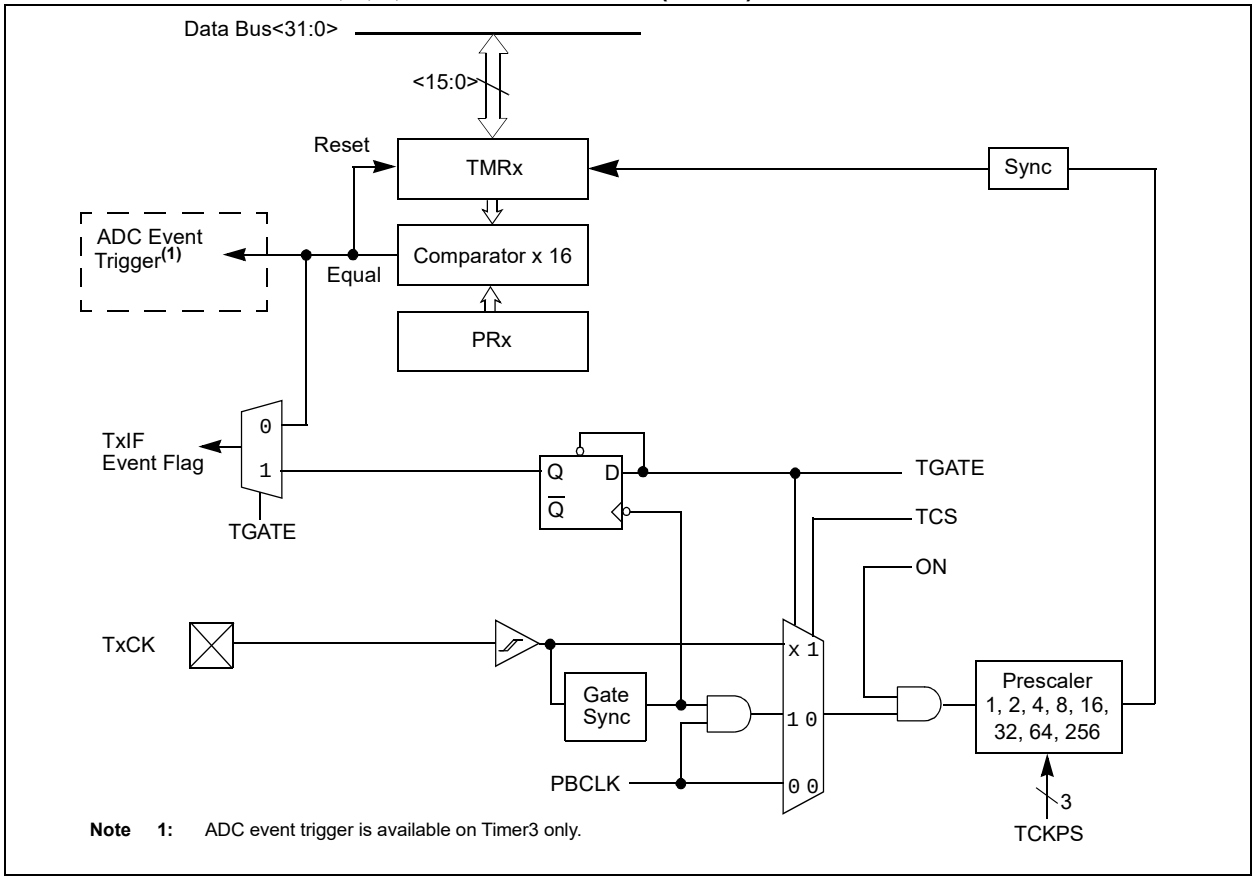

Note 1: ADC event trigger is available on Timer3 only.

FIGURE 13-2: TIMER2/3, 4/5 BLOCK DIAGRAM (32-BIT)(1)

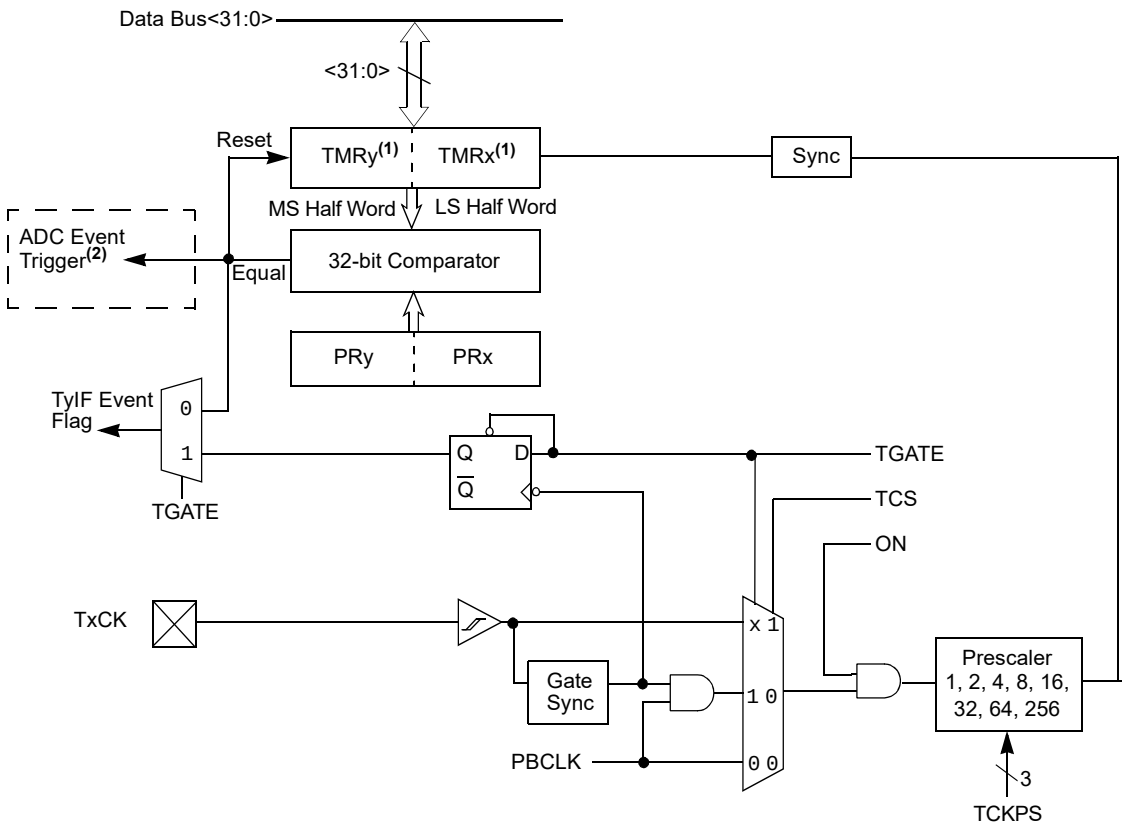

Note 1: In this diagram, the use of 'x' in registers, TxCON, TMRx, PRx and TxCK, refers to either Timer2 or Timer4; the use of 'y' in registers, TyCON, TMRy, PRy, TyIF, refers to either Timer3 or Timer5.

2: ADC event trigger is available only on the Timer2/3 pair.

© 2014-2019 Microchip Technology Inc.

13.2 Control Registers

TABLE 13-1: TIMER2 THROUGH TIMER5 REGISTER MAP

Virtual Address (BF80_#)	Register Name(1)	Bit Range	Bits																All Resets
			31/15	30/14	29/13	28/12	27/11	26/10	25/9	24/8	23/7	22/6	21/5	20/4	19/3	18/2	17/1	16/0	
0800	T2CON	31:16	—	—	—	—	—	—	—	—	—	—	—	—	—	—	—	—	0000
		15:0	ON	—	SIDL	—	—	—	—	—	TGATE	TCKPS<2:0>			T32	—	TCS	—	0000
0810	TMR2	31:16	—	—	—	—	—	—	—	—	—	—	—	—	—	—	—	—	0000
		15:0	TMR2<15:0>																0000
0820	PR2	31:16	—	—	—	—	—	—	—	—	—	—	—	—	—	—	—	—	0000
		15:0	PR2<15:0>																FFFF
0A00	T3CON	31:16	—	—	—	—	—	—	—	—	—	—	—	—	—	—	—	—	0000
		15:0	ON	—	SIDL	—	—	—	—	—	TGATE	TCKPS<2:0>			—	—	TCS	—	0000
0A10	TMR3	31:16	—	—	—	—	—	—	—	—	—	—	—	—	—	—	—	—	0000
		15:0	TMR3<15:0>																0000
0A20	PR3	31:16	—	—	—	—	—	—	—	—	—	—	—	—	—	—	—	—	0000
		15:0	PR3<15:0>																FFFF
0C00	T4CON	31:16	—	—	—	—	—	—	—	—	—	—	—	—	—	—	—	—	0000
		15:0	ON	—	SIDL	—	—	—	—	—	TGATE	TCKPS<2:0>			T32	—	TCS	—	0000
0C10	TMR4	31:16	—	—	—	—	—	—	—	—	—	—	—	—	—	—	—	—	0000
		15:0	TMR4<15:0>																0000
0C20	PR4	31:16	—	—	—	—	—	—	—	—	—	—	—	—	—	—	—	—	0000
		15:0	PR4<15:0>																FFFF
0E00	T5CON	31:16	—	—	—	—	—	—	—	—	—	—	—	—	—	—	—	—	0000
		15:0	ON	—	SIDL	—	—	—	—	—	TGATE	TCKPS<2:0>			—	—	TCS	—	0000
0E10	TMR5	31:16	—	—	—	—	—	—	—	—	—	—	—	—	—	—	—	—	0000
		15:0	TMR5<15:0>																0000
0E20	PR5	31:16	—	—	—	—	—	—	—	—	—	—	—	—	—	—	—	—	0000
		15:0	PR5<15:0>																FFFF

Legend: x = unknown value on Reset; — = unimplemented, read as ‘0’. Reset values are shown in hexadecimal.

Note 1: All registers in this table have corresponding CLR, SET and INV registers at their virtual addresses, plus offsets of 0x4, 0x8 and 0xC, respectively. See **Section 11.2 “CLR, SET, and INV Registers”** for more information.

© 2014-2019 Microchip Technology Inc.

REGISTER 13-1: TxCON: TYPE B TIMER ‘x’ CONTROL REGISTER (‘x’ = 2 THROUGH 5)

Bit Range	Bit 31/23/15/7	Bit 30/22/14/6	Bit 29/21/13/5	Bit 28/20/12/4	Bit 27/19/11/3	Bit 26/18/10/2	Bit 25/17/9/1	Bit 24/16/8/0
31:24	U-0	U-0	U-0	U-0	U-0	U-0	U-0	U-0
	—	—	—	—	—	—	—	—
23:16	U-0	U-0	U-0	U-0	U-0	U-0	U-0	U-0
	—	—	—	—	—	—	—	—
15:8	R/W-0	U-0	R/W-0	U-0	U-0	U-0	U-0	U-0
	ON(1,3)	—	SIDL(4)	—	—	—	—	—
7:0	R/W-0	R/W-0	R/W-0	R/W-0	R/W-0	U-0	R/W-0	U-0
	TGATE(3)	TCKPS<2:0>(3)			T32(2)	—	TCS(3)	—

Legend:			
R = Readable bit	W = Writable bit	U = Unimplemented bit, read as ‘0’	
-n = Value at POR	‘1’ = Bit is set	‘0’ = Bit is cleared	x = Bit is unknown

bit 31-16 **Unimplemented:** Read as ‘0’

bit 15 **ON:** Timer On bit(1,3)
1 = Module is enabled
0 = Module is disabled

bit 14 **Unimplemented:** Read as ‘0’

bit 13 **SIDL:** Stop in Idle Mode bit(4)
1 = Discontinue operation when device enters Idle mode
0 = Continue operation even in Idle mode

bit 12-8 **Unimplemented:** Read as ‘0’

bit 7 **TGATE:** Timer Gated Time Accumulation Enable bit(3)
When TCS = 1:
This bit is ignored and is read as ‘0’.
When TCS = 0:
1 = Gated time accumulation is enabled
0 = Gated time accumulation is disabled

bit 6-4 **TCKPS<2:0>:** Timer Input Clock Prescale Select bits(3)
111 = 1:256 prescale value
110 = 1:64 prescale value
101 = 1:32 prescale value
100 = 1:16 prescale value
011 = 1:8 prescale value
010 = 1:4 prescale value
001 = 1:2 prescale value
000 = 1:1 prescale value

Note 1: When using 1:1 PBCLK divisor, the user’s software should not read/write the peripheral SFRs in the SYSCLK cycle immediately following the instruction that clears the module’s ON bit.

2: This bit is available only on even numbered timers (Timer2 and Timer4).

3: While operating in 32-bit mode, this bit has no effect for odd numbered timers (Timer3 and Timer5). All timer functions are set through the even numbered timers.

4: While operating in 32-bit mode, this bit must be cleared on odd numbered timers to enable the 32-bit timer in Idle mode.

© 2014-2019 Microchip Technology Inc.

REGISTER 13-1: TxCON: TYPE B TIMER 'x' CONTROL REGISTER (CONTINUED)('x' = 2

bit 3 **T32:** 32-Bit Timer Mode Select bit(2)
1 = Odd numbered and even numbered timers form a 32-bit timer
0 = Odd numbered and even numbered timers form a separate 16-bit timer

bit 2 **Unimplemented:** Read as '0'

bit 1 **TCS:** Timer Clock Source Select bit(3)
1 = External clock from TxCK pin
0 = Internal peripheral clock

bit 0 **Unimplemented:** Read as '0'

Note 1: When using 1:1 PBCLK divisor, the user's software should not read/write the peripheral SFRs in the SYSCLK cycle immediately following the instruction that clears the module's ON bit.

2: This bit is available only on even numbered timers (Timer2 and Timer4).

3: While operating in 32-bit mode, this bit has no effect for odd numbered timers (Timer3 and Timer5). All timer functions are set through the even numbered timers.

4: While operating in 32-bit mode, this bit must be cleared on odd numbered timers to enable the 32-bit timer in Idle mode.

NOTES:

© 2014-2019 Microchip Technology Inc.

14.0 WATCHDOG TIMER (WDT)

Note: This data sheet summarizes the features of the PIC32MX1XX/2XX/5XX 64/100-pin Family family of devices. It is not intended to be a comprehensive reference source. To complement the information in this data sheet, refer to **Section 9. "Watchdog, Deadman, and Power-up Timers"** (DS60001114) in the *"PIC32 Family Reference Manual"*, which is available from the Microchip web site (www.microchip.com/PIC32).

The Watchdog Timer (WDT), when enabled, operates from the internal Low-Power Oscillator (LPRC) clock source and can be used to detect system software malfunctions by resetting the device if the WDT is not cleared periodically in software. Various WDT time-out periods can be selected using the WDT postscaler. The WDT can also be used to wake the device from Sleep or Idle mode.

The following are some of the key features of the WDT module:

- Configuration or software controlled
- User-configurable time-out period
- Can wake the device from Sleep or Idle

FIGURE 14-1: WATCHDOG AND POWER-UP TIMER BLOCK DIAGRAM

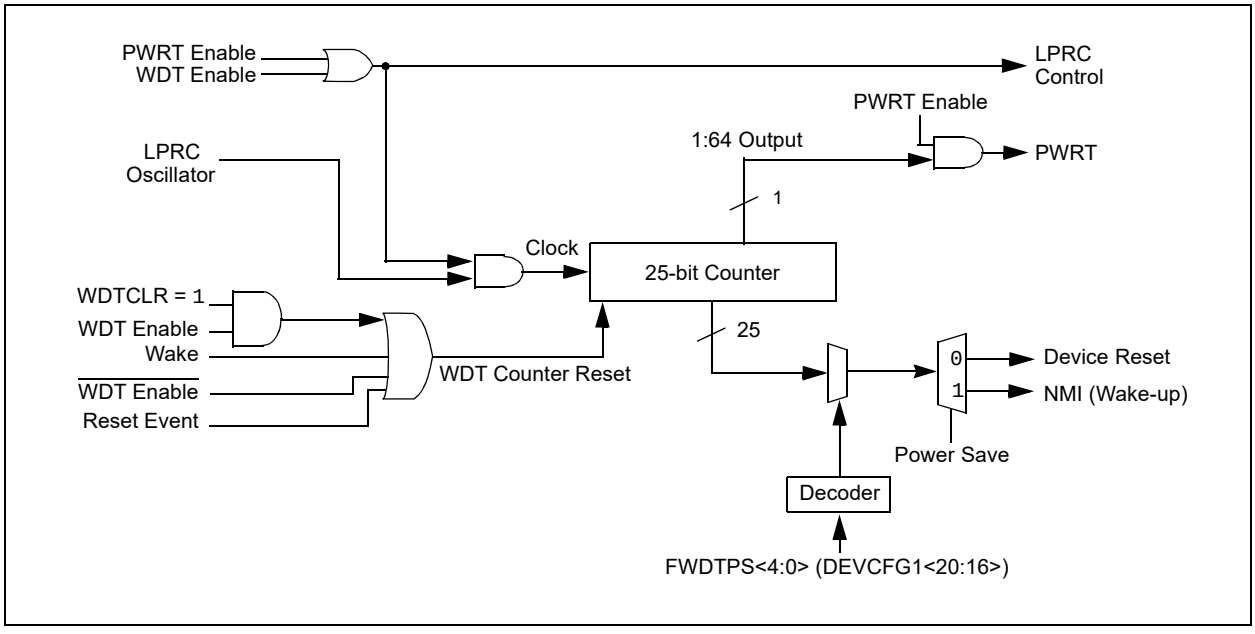

TABLE 14-1: WATCHDOG TIMER REGISTER MAP

Virtual Address (BF80_#)	Register Name(1)	Bit Range	Bits																All Resets
			31/15	30/14	29/13	28/12	27/11	26/10	25/9	24/8	23/7	22/6	21/5	20/4	19/3	18/2	17/1	16/0	
0000	WDTCON	31:16	—	—	—	—	—	—	—	—	—	—	—	—	—	—	—	—	0000
		15:0	ON	—	—	—	—	—	—	—	—	SWDTPS<4:0>					WDTWINEN	WDTCLR	0000

Legend: x = unknown value on Reset; — = unimplemented, read as ‘0’. Reset values are shown in hexadecimal.

© 2014-2019 Microchip Technology Inc.

REGISTER 14-1: WDTCON: WATCHDOG TIMER CONTROL REGISTER

Bit Range	Bit 31/23/15/7	Bit 30/22/14/6	Bit 29/21/13/5	Bit 28/20/12/4	Bit 27/19/11/3	Bit 26/18/10/2	Bit 25/17/9/1	Bit 24/16/8/0
31:24	U-0	U-0	U-0	U-0	U-0	U-0	U-0	U-0
	—	—	—	—	—	—	—	—
23:16	U-0	U-0	U-0	U-0	U-0	U-0	U-0	U-0
	—	—	—	—	—	—	—	—
15:8	R/W-0	U-0	U-0	U-0	U-0	U-0	U-0	U-0
	ON(1,2)	—	—	—	—	—	—	—
7:0	U-0	R-y	R-y	R-y	R-y	R-y	R/W-0	R/W-0
	—	SWDTPS<4:0>					WDTWINEN	WDTCLR

Legend:	y = Values set from Configuration bits on POR		
R = Readable bit	W = Writable bit	U = Unimplemented bit, read as ‘0’	
-n = Value at POR	‘1’ = Bit is set	‘0’ = Bit is cleared	x = Bit is unknown

bit 31-16 **Unimplemented:** Read as ‘0’

bit 15 **ON:** Watchdog Timer Enable bit(1,2)
1 = Enables the WDT if it is not enabled by the device configuration
0 = Disable the WDT if it was enabled in software

bit 14-7 **Unimplemented:** Read as ‘0’

bit 6-2 **SWDTPS<4:0>:** Shadow Copy of Watchdog Timer Postscaler Value from Device Configuration bits
On reset, these bits are set to the values of the WDTPS <4:0> of Configuration bits.

bit 1 **WDTWINEN:** Watchdog Timer Window Enable bit
1 = Enable windowed Watchdog Timer
0 = Disable windowed Watchdog Timer

bit 0 **WDTCLR:** Watchdog Timer Reset bit
1 = Writing a ‘1’ will clear the WDT
0 = Software cannot force this bit to a ‘0’

Note 1: A read of this bit results in a ‘1’ if the Watchdog Timer is enabled by the device configuration or software.

2: When using the 1:1 PBCLK divisor, the user software should not read or write the peripheral’s SFRs in the SYSCLK cycle immediately following the instruction that clears the module’s ON bit.

NOTES:

© 2014-2019 Microchip Technology Inc.

15.0 INPUT CAPTURE

Note: This data sheet summarizes the features of the PIC32MX1XX/2XX/5XX 64/100-pin family of devices. It is not intended to be a comprehensive reference source. To complement the information in this data sheet, refer to **Section 15. "Input Capture"** (DS60001122) of the *"PIC32 Family Reference Manual"*, which is available from the Microchip web site (www.microchip.com/PIC32).

The Input Capture module is useful in applications requiring frequency (period) and pulse measurement.

The Input Capture module captures the 16-bit or 32-bit value of the selected Time Base registers when an event occurs at the ICx pin. The following events cause capture events:

- Simple capture event modes:
  - Capture timer value on every falling edge of input at ICx pin
  - Capture timer value on every rising edge of input at ICx pin
  - Capture timer value on every edge (rising and falling)
  - Capture timer value on every edge (rising and falling), specified edge first.
- Prescaler capture event modes:
  - Capture timer value on every 4th rising edge of input at ICx pin
  - Capture timer value on every 16th rising edge of input at ICx pin

Each input capture channel can select between one of two 16-bit timers (Timer2 or Timer3) for the time base, or two 16-bit timers (Timer2 and Timer3) together to form a 32-bit timer. The selected timer can use either an internal or external clock.

The other operational features include:

- Device wake-up from capture pin during CPU Sleep and Idle modes
- Interrupt on input capture event
- 4-word FIFO buffer for capture values
  Interrupt optionally generated after 1, 2, 3, or 4 buffer locations are filled
- Input capture can also be used to provide additional sources of external interrupts

FIGURE 15-1: INPUT CAPTURE BLOCK DIAGRAM

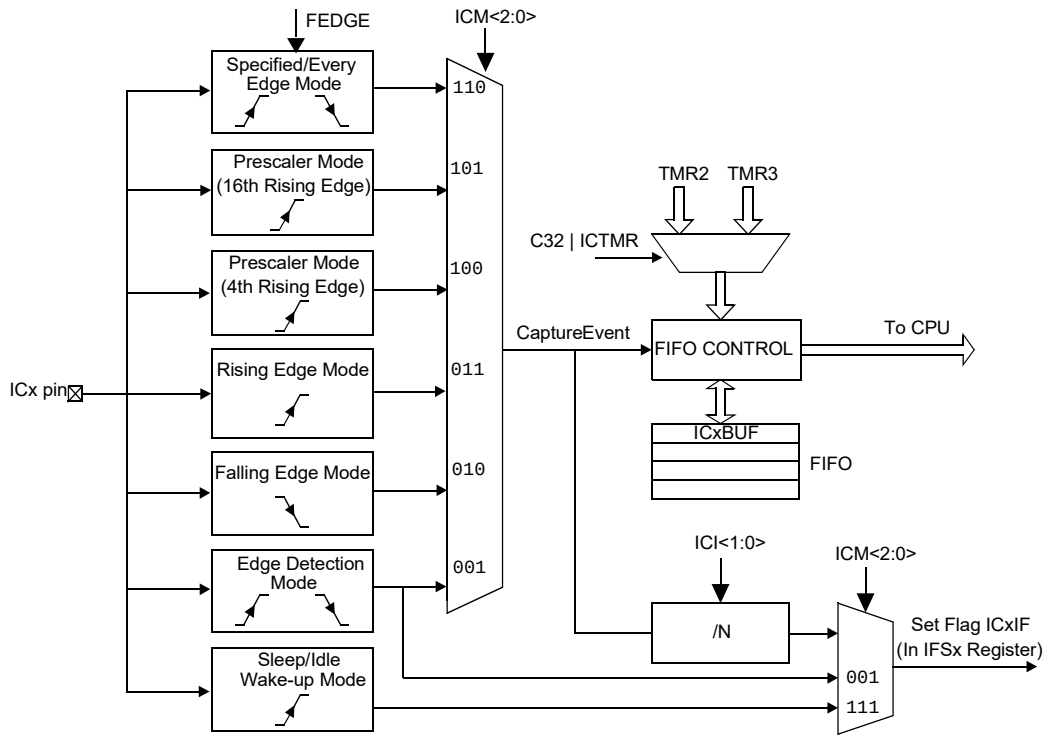

Note: An 'x' in a signal, register or bit name denotes the number of the capture channel.

15.1 Control Registers

TABLE 15-1: INPUT CAPTURE 1 THROUGH INPUT CAPTURE 5 REGISTER MAP

Virtual Address (BF80_#)	Register Name	Bit Range	Bits 31/15	30/14	29/13	28/12	27/11	26/10	25/9	24/8	23/7	22/6	21/5	20/4	19/3	18/2	17/1	16/0	All Resets
2000	IC1CON(1)	31:16	—	—	—	—	—	—	—	—	—	—	—	—	—	—	—	—	0000
		15:0	ON	—	SIDL	—	—	—	FEDGE	C32	ICTMR	ICI<1:0>		ICOV	ICBNE	ICM<2:0>			0000
2010	IC1BUF	31:16	IC1BUF<31:0>																xxxx
		15:0																	xxxx
2200	IC2CON(1)	31:16	—	—	—	—	—	—	—	—	—	—	—	—	—	—	—	—	0000
		15:0	ON	—	SIDL	—	—	—	FEDGE	C32	ICTMR	ICI<1:0>		ICOV	ICBNE	ICM<2:0>			0000
2210	IC2BUF	31:16	IC2BUF<31:0>																xxxx
		15:0																	xxxx
2400	IC3CON(1)	31:16	—	—	—	—	—	—	—	—	—	—	—	—	—	—	—	—	0000
		15:0	ON	—	SIDL	—	—	—	FEDGE	C32	ICTMR	ICI<1:0>		ICOV	ICBNE	ICM<2:0>			0000
2410	IC3BUF	31:16	IC3BUF<31:0>																xxxx
		15:0																	xxxx
2600	IC4CON(1)	31:16	—	—	—	—	—	—	—	—	—	—	—	—	—	—	—	—	0000
		15:0	ON	—	SIDL	—	—	—	FEDGE	C32	ICTMR	ICI<1:0>		ICOV	ICBNE	ICM<2:0>			0000
2610	IC4BUF	31:16	IC4BUF<31:0>																xxxx
		15:0																	xxxx
2800	IC5CON(1)	31:16	—	—	—	—	—	—	—	—	—	—	—	—	—	—	—	—	0000
		15:0	ON	—	SIDL	—	—	—	FEDGE	C32	ICTMR	ICI<1:0>		ICOV	ICBNE	ICM<2:0>			0000
2810	IC5BUF	31:16	IC5BUF<31:0>																xxxx
		15:0																	xxxx

Legend: x = unknown value on Reset; — = unimplemented, read as ‘0’. Reset values are shown in hexadecimal.

Note 1: This register has corresponding CLR, SET and INV registers at its virtual address, plus an offset of 0x4, 0x8 and 0xC, respectively. See **Section 11.2 “CLR, SET, and INV Registers”** for more information.

© 2014-2019 Microchip Technology Inc.

REGISTER 15-1: ICxCON: INPUT CAPTURE 'x' CONTROL REGISTER ('x' = 1 THROUGH 5)

Bit Range	Bit 31/23/15/7	Bit 30/22/14/6	Bit 29/21/13/5	Bit 28/20/12/4	Bit 27/19/11/3	Bit 26/18/10/2	Bit 25/17/9/1	Bit 24/16/8/0
31:24	U-0	U-0	U-0	U-0	U-0	U-0	U-0	U-0
	—	—	—	—	—	—	—	—
23:16	U-0	U-0	U-0	U-0	U-0	U-0	U-0	U-0
	—	—	—	—	—	—	—	—
15:8	R/W-0	U-0	R/W-0	U-0	U-0	U-0	R/W-0	R/W-0
	ON(1)	—	SIDL	—	—	—	FEDGE	C32
7:0	R/W-0	R/W-0	R/W-0	R-0	R-0	R/W-0	R/W-0	R/W-0
	ICTMR	ICI<1:0>		ICOV	ICBNE	ICM<2:0>		

Legend:			
R = Readable bit	W = Writable bit	U = Unimplemented bit	
-n = Bit Value at POR: ('0', '1', x = unknown)		P = Programmable bit	r = Reserved bit

bit 31-16 **Unimplemented:** Read as '0'

bit 15 **ON:** Input Capture Module Enable bit(1)
1 = Module enabled
0 = Disable and reset module, disable clocks, disable interrupt generation and allow SFR modifications

bit 14 **Unimplemented:** Read as '0'

bit 13 **SIDL:** Stop in Idle Control bit
1 = Halt in CPU Idle mode
0 = Continue to operate in CPU Idle mode

bit 12-10 **Unimplemented:** Read as '0'

bit 9 **FEDGE:** First Capture Edge Select bit (only used in mode 6, ICM<2:0> = 110)
1 = Capture rising edge first
0 = Capture falling edge first

bit 8 **C32:** 32-bit Capture Select bit
1 = 32-bit timer resource capture
0 = 16-bit timer resource capture

bit 7 **ICTMR:** Timer Select bit (Does not affect timer selection when C32 (ICxCON<8>) is '1')
0 = Timer3 is the counter source for capture
1 = Timer2 is the counter source for capture

bit 6-5 **ICI<1:0>:** Interrupt Control bits
11 = Interrupt on every fourth capture event
10 = Interrupt on every third capture event
01 = Interrupt on every second capture event
00 = Interrupt on every capture event

bit 4 **ICOV:** Input Capture Overflow Status Flag bit (read-only)
1 = Input capture overflow occurred
0 = No input capture overflow occurred

bit 3 **ICBNE:** Input Capture Buffer Not Empty Status bit (read-only)
1 = Input capture buffer is not empty; at least one more capture value can be read
0 = Input capture buffer is empty

Note 1: When using 1:1 PBCLK divisor, the user software should not read/write the peripheral's SFRs in the SYSCLK cycle immediately following the instruction that clears the module's ON bit.

REGISTER 15-1: ICxCON: INPUT CAPTURE 'x' CONTROL REGISTER (CONTINUED)('x' = 1

bit 2-0 **ICM<2:0>:** Input Capture Mode Select bits

111 = Interrupt-Only mode (only supported while in Sleep mode or Idle mode)
110 = Simple Capture Event mode – every edge, specified edge first and every edge thereafter
101 = Prescaled Capture Event mode – every sixteenth rising edge
100 = Prescaled Capture Event mode – every fourth rising edge
011 = Simple Capture Event mode – every rising edge
010 = Simple Capture Event mode – every falling edge
001 = Edge Detect mode – every edge (rising and falling)
000 = Input Capture module is disabled

Note 1: When using 1:1 PBCLK divisor, the user software should not read/write the peripheral's SFRs in the SYSCLK cycle immediately following the instruction that clears the module's ON bit.

© 2014-2019 Microchip Technology Inc.

16.0 OUTPUT COMPARE

Note: This data sheet summarizes the features of the PIC32MX1XX/2XX/5XX 64/100-pin family of devices. It is not intended to be a comprehensive reference source. To complement the information in this data sheet, refer to **Section 16. "Output Compare"** (DS60001111) in the *"PIC32 Family Reference Manual"*, which is available from the Microchip web site (www.microchip.com/PIC32).

The Output Compare module is used to generate a single pulse or a train of pulses in response to selected time base events. For all modes of operation, the Output Compare module compares the values stored in the OCxR and/or the OCxRS registers to the value in the selected timer. When a match occurs, the Output Compare module generates an event based on the selected mode of operation.

The following are the key features of this module:

- Multiple Output Compare modules in a device
- Programmable interrupt generation on compare event
- Single and Dual Compare modes
- Single and continuous output pulse generation
- Pulse-Width Modulation (PWM) mode
- Hardware-based PWM Fault detection and automatic output disable
- Can operate from either of two available 16-bit time bases or a single 32-bit time base

FIGURE 16-1: OUTPUT COMPARE MODULE BLOCK DIAGRAM

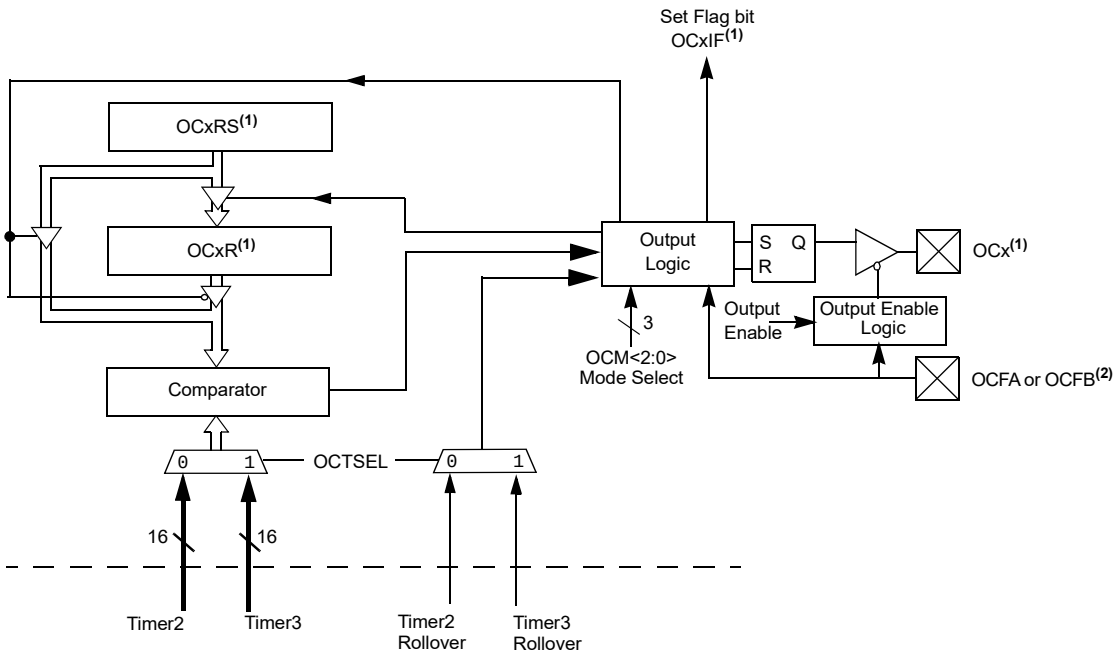

Note 1: Where 'x' is shown, reference is made to the registers associated with the respective output compare channels, 1 through 5.

2: The OCFA pin controls the OC1-OC4 channels. The OCFB pin controls the OC5 channel.

16.1 Control Registers

TABLE 16-1: OUTPUT COMPARE 1 THROUGH OUTPUT COMPARE 5 REGISTER MAP

Virtual Address (BF80_#)	Register Name(1)	Bit Range	Bits																All Resets
			31/15	30/14	29/13	28/12	27/11	26/10	25/9	24/8	23/7	22/6	21/5	20/4	19/3	18/2	17/1	16/0	
3000	OC1CON	31:16	—	—	—	—	—	—	—	—	—	—	—	—	—	—	—	—	0000
		15:0	ON	—	SIDL	—	—	—	—	—	—	—	OC32	OCFLT	OCTSEL	OCM<2:0>			0000
3010	OC1R	31:16	OC1R<31:0>																xxxx
		15:0																	xxxx
3020	OC1RS	31:16	OC1RS<31:0>																xxxx
		15:0																	xxxx
3200	OC2CON	31:16	—	—	—	—	—	—	—	—	—	—	—	—	—	—	—	—	0000
		15:0	ON	—	SIDL	—	—	—	—	—	—	—	OC32	OCFLT	OCTSEL	OCM<2:0>			0000
3210	OC2R	31:16	OC2R<31:0>																xxxx
		15:0																	xxxx
3220	OC2RS	31:16	OC2RS<31:0>																xxxx
		15:0																	xxxx
3400	OC3CON	31:16	—	—	—	—	—	—	—	—	—	—	—	—	—	—	—	—	0000
		15:0	ON	—	SIDL	—	—	—	—	—	—	—	OC32	OCFLT	OCTSEL	OCM<2:0>			0000
3410	OC3R	31:16	OC3R<31:0>																xxxx
		15:0																	xxxx
3420	OC3RS	31:16	OC3RS<31:0>																xxxx
		15:0																	xxxx
3600	OC4CON	31:16	—	—	—	—	—	—	—	—	—	—	—	—	—	—	—	—	0000
		15:0	ON	—	SIDL	—	—	—	—	—	—	—	OC32	OCFLT	OCTSEL	OCM<2:0>			0000
3610	OC4R	31:16	OC4R<31:0>																xxxx
		15:0																	xxxx
3620	OC4RS	31:16	OC4RS<31:0>																xxxx
		15:0																	xxxx
3800	OC5CON	31:16	—	—	—	—	—	—	—	—	—	—	—	—	—	—	—	—	0000
		15:0	ON	—	SIDL	—	—	—	—	—	—	—	OC32	OCFLT	OCTSEL	OCM<2:0>			0000
3810	OC5R	31:16	OC5R<31:0>																xxxx
		15:0																	xxxx
3820	OC5RS	31:16	OC5RS<31:0>																xxxx
		15:0																	xxxx

Legend: x = unknown value on Reset; — = unimplemented, read as '0'. Reset values are shown in hexadecimal.

Note 1: All registers in this table have corresponding CLR, SET and INV registers at their virtual addresses, plus offsets of 0x4, 0x8 and 0xC, respectively. See **Section 11.2 "CLR, SET, and INV Registers"** for more information.

© 2014-2019 Microchip Technology Inc.

REGISTER 16-1: OCxCON: OUTPUT COMPARE 'x' CONTROL REGISTER ('x' = 1 THROUGH 5)

Bit Range	Bit 31/23/15/7	Bit 30/22/14/6	Bit 29/21/13/5	Bit 28/20/12/4	Bit 27/19/11/3	Bit 26/18/10/2	Bit 25/17/9/1	Bit 24/16/8/0
31:24	U-0	U-0	U-0	U-0	U-0	U-0	U-0	U-0
	—	—	—	—	—	—	—	—
23:16	U-0	U-0	U-0	U-0	U-0	U-0	U-0	U-0
	—	—	—	—	—	—	—	—
15:8	R/W-0	U-0	R/W-0	U-0	U-0	U-0	U-0	U-0
	ON(1)	—	SIDL	—	—	—	—	—
7:0	U-0	U-0	R/W-0	R-0	R/W-0	R/W-0	R/W-0	R/W-0
	—	—	OC32	OCFLT(2)	OCTSEL	OCM<2:0>		

Legend:			
R = Readable bit	W = Writable bit	U = Unimplemented bit, read as '0'	
-n = Value at POR	'1' = Bit is set	'0' = Bit is cleared	x = Bit is unknown

bit 31-16 **Unimplemented:** Read as '0'

bit 15 **ON:** Output Compare Peripheral On bit(1)
- 1 = Output Compare peripheral is enabled
- 0 = Output Compare peripheral is disabled

bit 14 **Unimplemented:** Read as '0'

bit 13 **SIDL:** Stop in Idle Mode bit
- 1 = Discontinue operation when CPU enters Idle mode
- 0 = Continue operation in Idle mode

bit 12-6 **Unimplemented:** Read as '0'

bit 5 **OC32:** 32-bit Compare Mode bit
- 1 = OCxR<31:0> and/or OCxRS<31:0> are used for comparisons to the 32-bit timer source
- 0 = OCxR<15:0> and OCxRS<15:0> are used for comparisons to the 16-bit timer source

bit 4 **OCFLT:** PWM Fault Condition Status bit(2)
- 1 = PWM Fault condition has occurred (cleared in HW only)
- 0 = No PWM Fault condition has occurred

bit 3 **OCTSEL:** Output Compare Timer Select bit
- 1 = Timer3 is the clock source for this Output Compare module
- 0 = Timer2 is the clock source for this Output Compare module

bit 2-0 **OCM<2:0>:** Output Compare Mode Select bits
- 111 = PWM mode on OCx; Fault pin enabled
- 110 = PWM mode on OCx; Fault pin disabled
- 101 = Initialize OCx pin low; generate continuous output pulses on OCx pin
- 100 = Initialize OCx pin low; generate single output pulse on OCx pin
- 011 = Compare event toggles OCx pin
- 010 = Initialize OCx pin high; compare event forces OCx pin low
- 001 = Initialize OCx pin low; compare event forces OCx pin high
- 000 = Output compare peripheral is disabled but continues to draw current

Note 1: When using 1:1 PBCLK divisor, the user software should not read/write the peripheral's SFRs in the SYSCLK cycle immediately following the instruction that clears the module's ON bit.

2: This bit is only used when OCM<2:0> = '111'. It is read as '0' in all other modes.

NOTES:

© 2014-2019 Microchip Technology Inc.

17.0 SERIAL PERIPHERAL INTERFACE (SPI)

Note: This data sheet summarizes the features of the PIC32MX1XX/2XX/5XX 64/100-pin family of devices. It is not intended to be a comprehensive reference source. To complement the information in this data sheet, refer to **Section 23. "Serial Peripheral Interface (SPI)"** (DS60001106) in the *"PIC32 Family Reference Manual"*, which is available from the Microchip web site (www.microchip.com/PIC32).

The SPI module is a synchronous serial interface that is useful for communicating with external peripherals and other microcontroller devices. These peripheral devices may be Serial EEPROMs, Shift registers, display drivers, Analog-to-Digital Converters (ADC), etc. The PIC32 SPI module is compatible with Motorola® SPI and SIOP interfaces.

Some of the key features of the SPI module are:

- Master and Slave modes support
- Four different clock formats
- Enhanced Framed SPI protocol support
- User-configurable 8-bit, 16-bit and 32-bit data width
- Separate SPI FIFO buffers for receive and transmit
  - FIFO buffers act as 4/8/16-level deep FIFOs based on 32/16/8-bit data width
- Programmable interrupt event on every 8-bit, 16-bit and 32-bit data transfer
- Operation during CPU Sleep and Idle mode
- Audio Codec Support:
  - I^2S protocol
  - Left-justified
  - Right-justified
  - PCM

FIGURE 17-1: SPI MODULE BLOCK DIAGRAM

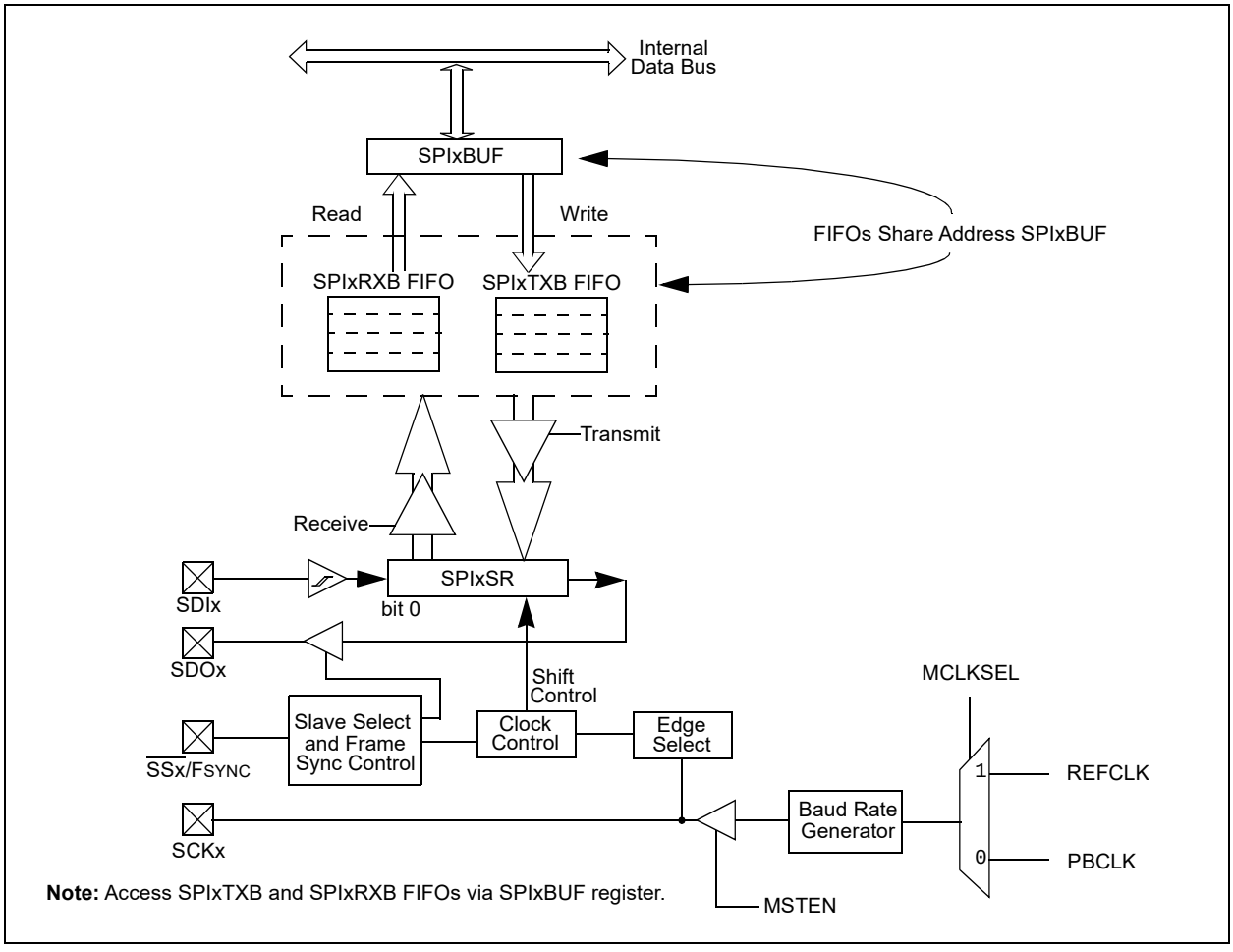

17.1 Control Registers

TABLE 17-1: SPI1 THROUGH SPI4 REGISTER MAP

Virtual Address (BF80_#)	Register Name(1)	Bit Range	Bits 31/15	30/14	29/13	28/12	27/11	26/10	25/9	24/8	23/7	22/6	21/5	20/4	19/3	18/2	17/1	16/0	All Resets
5800	SPI1CON	31:16	FRMEN	FRMSYNC	FRMPOL	MSSEN	FRMSYPW	FRMCNT<2:0>			MCLKSEL	—	—	—	—	—	SPIFE	ENHBUF	0000
		15:0	ON	—	SIDL	DISSDO	MODE32	MODE16	SMP	CKE	SSEN	CKP	MSTEN	DISSDI	STXISEL<1:0>		SRXISEL<1:0>		0000
5810	SPI1STAT	31:16	—	—	—	RXBUFELM<4:0>					—	—	—	TXBUFELM<4:0>					0000
		15:0	—	—	—	FRMERR	SPIBUSY	—	—	SPITUR	SRMT	SPIROV	SPIRBE	—	SPITBE	—	SPITBF	SPIRBF	19EB
5820	SPI1BUF	31:16	DATA<31:0>																0000
		15:0																	0000
5830	SPI1BRG	31:16	—	—	—	—	—	—	—	—	—	—	—	—	—	—	—	—	0000
		15:0	—	—	—	—	—	—	—	BRG<8:0>									0000
5840	SPI1CON2	31:16	—	—	—	—	—	—	—	—	—	—	—	—	—	—	—	—	0000
		15:0	SPI SGNEXT	—	—	FRM ERREN	SPI ROVEN	SPI TUREN	IGNROV	IGNTUR	AUDEN	—	—	—	AUD MONO	—	AUDMOD<1:0>		0000
5A00	SPI2CON	31:16	FRMEN	FRMSYNC	FRMPOL	MSSEN	FRMSYPW	FRMCNT<2:0>			MCLKSEL	—	—	—	—	—	SPIFE	ENHBUF	0000
		15:0	ON	—	SIDL	DISSDO	MODE32	MODE16	SMP	CKE	SSEN	CKP	MSTEN	DISSDI	STXISEL<1:0>		SRXISEL<1:0>		0000
5A10	SPI2STAT	31:16	—	—	—	RXBUFELM<4:0>					—	—	—	TXBUFELM<4:0>					0000
		15:0	—	—	—	FRMERR	SPIBUSY	—	—	SPITUR	SRMT	SPIROV	SPIRBE	—	SPITBE	—	SPITBF	SPIRBF	19EB
5A20	SPI2BUF	31:16	DATA<31:0>																0000
		15:0																	0000
5A30	SPI2BRG	31:16	—	—	—	—	—	—	—	—	—	—	—	—	—	—	—	—	0000
		15:0	—	—	—	—	—	—	—	BRG<8:0>									0000
5A40	SPI2CON2	31:16	—	—	—	—	—	—	—	—	—	—	—	—	—	—	—	—	0000
		15:0	SPI SGNEXT	—	—	FRM ERREN	SPI ROVEN	SPI TUREN	IGNROV	IGNTUR	AUDEN	—	—	—	AUD MONO	—	AUDMOD<1:0>		0000
5C00	SPI3CON	31:16	FRMEN	FRMSYNC	FRMPOL	MSSEN	FRMSYPW	FRMCNT<2:0>			MCLKSEL	—	—	—	—	—	SPIFE	ENHBUF	0000
		15:0	ON	—	SIDL	DISSDO	MODE32	MODE16	SMP	CKE	SSEN	CKP	MSTEN	DISSDI	STXISEL<1:0>		SRXISEL<1:0>		0000
5C10	SPI3STAT	31:16	—	—	—	RXBUFELM<4:0>					—	—	—	TXBUFELM<4:0>					0000
		15:0	—	—	—	FRMERR	SPIBUSY	—	—	SPITUR	SRMT	SPIROV	SPIRBE	—	SPITBE	—	SPITBF	SPIRBF	19EB
5C20	SPI3BUF	31:16	DATA<31:0>																0000
		15:0																	0000
5C30	SPI3BRG	31:16	—	—	—	—	—	—	—	—	—	—	—	—	—	—	—	—	0000
		15:0	—	—	—	—	—	—	—	BRG<8:0>									0000

Legend: x = unknown value on Reset; — = unimplemented, read as '0'. Reset values are shown in hexadecimal.

Note 1: All registers in this table except SPIxBUF have corresponding CLR, SET and INV registers at their virtual addresses, plus offsets of 0x4, 0x8 and 0xC, respectively. See **Section 11.2 "CLR, SET, and INV Registers"** for more information.

2: This register is only available on 100-pin devices.

© 2014-2019 Microchip Technology Inc.

TABLE 17-1: SPI1 THROUGH SPI4 REGISTER MAP (CONTINUED)

Virtual Address (BF80_#)	Register Name(1)	Bit Range	Bits																All Resets
			31/15	30/14	29/13	28/12	27/11	26/10	25/9	24/8	23/7	22/6	21/5	20/4	19/3	18/2	17/1	16/0	
5C40	SPI3CON2	31:16	—	—	—	—	—	—	—	—	—	—	—	—	—	—	—	—	0000
		15:0	SPI SGNEXT	—	—	FRM ERREN	SPI ROVEN	SPI TUREN	IGNROV	IGNTUR	AUDEN	—	—	—	AUD MONO	—	AUDMOD<1:0>		0000
5E00	SPI4CON(2)	31:16	FRMEN	FRMSYNC	FRMPOL	MSSEN	FRMSYPW	FRMCNT<2:0>			MCLKSEL	—	—	—	—	—	SPIFE	ENHBUF	0000
		15:0	ON	—	SIDL	DISSDO	MODE32	MODE16	SMP	CKE	SSEN	CKP	MSTEN	DISSDI	STXISEL<1:0>		SRXISEL<1:0>		0000
5E10	SPI4STAT(2)	31:16	—	—	—	RXBUFELM<4:0>					—	—	—	TXBUFELM<4:0>					0000
		15:0	—	—	—	FRMERR	SPIBUSY	—	—	SPITUR	SRMT	SPIROV	SPIRBE	—	SPITBE	—	SPITBF	SPIRBF	19EB
5E20	SPI4BUF(2)	31:16	DATA<31:0>																0000
		15:0																	0000
5E30	SPI4BRG(2)	31:16	—	—	—	—	—	—	—	—	—	—	—	—	—	—	—	—	0000
		15:0	—	—	—	—	—	—	—	BRG<8:0>									0000
5E40	SPI4CON2(2)	31:16	—	—	—	—	—	—	—	—	—	—	—	—	—	—	—	—	0000
		15:0	SPI SGNEXT	—	—	FRM ERREN	SPI ROVEN	SPI TUREN	IGNROV	IGNTUR	AUDEN	—	—	—	AUD MONO	—	AUDMOD<1:0>		0000

Legend: x = unknown value on Reset; — = unimplemented, read as '0'. Reset values are shown in hexadecimal.

Note 1: All registers in this table except SPIxBUF have corresponding CLR, SET and INV registers at their virtual addresses, plus offsets of 0x4, 0x8 and 0xC, respectively. See **Section 11.2 "CLR, SET, and INV Registers"** for more information.

2: This register is only available on 100-pin devices.

© 2014-2019 Microchip Technology Inc.

REGISTER 17-1: SPIxCON: SPI CONTROL REGISTER

Bit Range	Bit 31/23/15/7	Bit 30/22/14/6	Bit 29/21/13/5	Bit 28/20/12/4	Bit 27/19/11/3	Bit 26/18/10/2	Bit 25/17/9/1	Bit 24/16/8/0
31:24	R/W-0	R/W-0	R/W-0	R/W-0	R/W-0	R/W-0	R/W-0	R/W-0
	FRMEN	FRMSYNC	FRMPOL	MSSEN	FRMSYPW	FRMCNT<2:0>		
23:16	R/W-0	U-0	U-0	U-0	U-0	U-0	R/W-0	R/W-0
	MCLKSEL(2)	—	—	—	—	—	SPIFE	ENHBUF(2)
15:8	R/W-0	U-0	R/W-0	R/W-0	R/W-0	R/W-0	R/W-0	R/W-0
	ON(1)	—	SIDL	DISSDO	MODE32	MODE16	SMP	CKE(3)
7:0	R/W-0	R/W-0	R/W-0	R/W-0	R/W-0	R/W-0	R/W-0	R/W-0
	SSEN	CKP(4)	MSTEN	DISSDI	STXISEL<1:0>		SRXISEL<1:0>	

Legend:			
R = Readable bit	W = Writable bit	U = Unimplemented bit, read as ‘0’	
-n = Value at POR	‘1’ = Bit is set	‘0’ = Bit is cleared	x = Bit is unknown

bit 31 **FRMEN:** Framed SPI Support bit
1 = Framed SPI support is enabled ($\overline{SSx}$ pin used as FSYNC input/output)
0 = Framed SPI support is disabled

bit 30 **FRMSYNC:** Frame Sync Pulse Direction Control on $\overline{SSx}$ pin bit (Framed SPI mode only)
1 = Frame sync pulse input (Slave mode)
0 = Frame sync pulse output (Master mode)

bit 29 **FRMPOL:** Frame Sync / Slave Select Polarity bit (Framed SPI or Master Transmit modes only)
1 = Frame pulse or $\overline{SSx}$ pin is active-high
0 = Frame pulse or $\overline{SSx}$ is active-low

bit 28 **MSSEN:** Master Mode Slave Select Enable bit
1 = Slave select SPI support enabled. The $\overline{SSx}$ pin is automatically driven during transmission in Master mode. Polarity is determined by the FRMPOL bit.
0 = Slave select SPI support is disabled.

bit 27 **FRMSYPW:** Frame Sync Pulse Width bit
1 = Frame sync pulse is one character wide
0 = Frame sync pulse is one clock wide

bit 26-24 **FRMCNT<2:0>:** Frame Sync Pulse Counter bits. Controls the number of data characters transmitted per pulse. This bit is only valid in FRAMED_SYNC mode.
111 = Reserved; do not use
110 = Reserved; do not use
101 = Generate a frame sync pulse on every 32 data characters
100 = Generate a frame sync pulse on every 16 data characters
011 = Generate a frame sync pulse on every 8 data characters
010 = Generate a frame sync pulse on every 4 data characters
001 = Generate a frame sync pulse on every 2 data characters
000 = Generate a frame sync pulse on every data character

bit 23 **MCLKSEL:** Master Clock Enable bit(2)
1 = REFCLK is used by the Baud Rate Generator
0 = PBCLK is used by the Baud Rate Generator

bit 22-18 **Unimplemented:** Read as ‘0’

Note 1: When using the 1:1 PBCLK divisor, the user software should not read or write the peripheral’s SFRs in the SYSCLK cycle immediately following the instruction that clears the module’s ON bit.

2: This bit can only be written when the ON bit = 0.

3: This bit is not used in the Framed SPI mode. The user should program this bit to ‘0’ for the Framed SPI mode (FRMEN = 1).

4: When AUDEN = 1, the SPI module functions as if the CKP bit is equal to ‘1’, regardless of the actual value of CKP.

© 2014-2019 Microchip Technology Inc.

REGISTER 17-1: SPIxCON: SPI CONTROL REGISTER (CONTINUED)

bit 17 **SPIFE:** Frame Sync Pulse Edge Select bit (Framed SPI mode only)
1 = Frame synchronization pulse coincides with the first bit clock
0 = Frame synchronization pulse precedes the first bit clock

bit 16 **ENHBUF:** Enhanced Buffer Enable bit(2)
1 = Enhanced Buffer mode is enabled
0 = Enhanced Buffer mode is disabled

bit 15 **ON:** SPI Peripheral On bit(1)
1 = SPI Peripheral is enabled
0 = SPI Peripheral is disabled

bit 14 **Unimplemented:** Read as '0'

bit 13 **SIDL:** Stop in Idle Mode bit
1 = Discontinue operation when CPU enters in Idle mode
0 = Continue operation in Idle mode

bit 12 **DISSDO:** Disable SDOx pin bit
1 = SDOx pin is not used by the module. Pin is controlled by associated PORT register
0 = SDOx pin is controlled by the module

bit 11-10 **MODE<32,16>:** 32/16-Bit Communication Select bits
When AUDEN = 1:
MODE32 MODE16 Communication
11 24-bit Data, 32-bit FIFO, 32-bit Channel/64-bit Frame
10 32-bit Data, 32-bit FIFO, 32-bit Channel/64-bit Frame
01 16-bit Data, 16-bit FIFO, 32-bit Channel/64-bit Frame
00 16-bit Data, 16-bit FIFO, 16-bit Channel/32-bit Frame

When AUDEN = 0:
MODE32 MODE16 Communication
1x 32-bit
01 16-bit
00 8-bit

bit 9 **SMP:** SPI Data Input Sample Phase bit
Master mode (MSTEN = 1):
1 = Input data sampled at end of data output time
0 = Input data sampled at middle of data output time
Slave mode (MSTEN = 0):
SMP value is ignored when SPI is used in Slave mode. The module always uses SMP = 0.

bit 8 **CKE:** SPI Clock Edge Select bit(3)
1 = Serial output data changes on transition from active clock state to Idle clock state (see CKP bit)
0 = Serial output data changes on transition from Idle clock state to active clock state (see CKP bit)

bit 7 **SSEN:** Slave Select Enable (Slave mode) bit
1 = $\overline{SSx}$ pin used for Slave mode
0 = SSx pin not used for Slave mode, pin controlled by port function.

bit 6 **CKP:** Clock Polarity Select bit(4)
1 = Idle state for clock is a high level; active state is a low level
0 = Idle state for clock is a low level; active state is a high level

bit 5 **MSTEN:** Master Mode Enable bit
1 = Master mode
0 = Slave mode

Note 1: When using the 1:1 PBCLK divisor, the user software should not read or write the peripheral's SFRs in the SYSCLK cycle immediately following the instruction that clears the module's ON bit.

2: This bit can only be written when the ON bit = 0.

3: This bit is not used in the Framed SPI mode. The user should program this bit to '0' for the Framed SPI mode (FRMEN = 1).

4: When AUDEN = 1, the SPI module functions as if the CKP bit is equal to '1', regardless of the actual value of CKP.

REGISTER 17-1: SPIxCON: SPI CONTROL REGISTER (CONTINUED)

bit 4 **DISSDI:** Disable SDI bit
1 = SDI pin is not used by the SPI module (pin is controlled by PORT function)
0 = SDI pin is controlled by the SPI module

bit 3-2 **STXISEL<1:0>:** SPI Transmit Buffer Empty Interrupt Mode bits
11 = Interrupt is generated when the buffer is not full (has one or more empty elements)
10 = Interrupt is generated when the buffer is empty by one-half or more
01 = Interrupt is generated when the buffer is completely empty
00 = Interrupt is generated when the last transfer is shifted out of SPISR and transmit operations are complete

bit 1-0 **SRXISEL<1:0>:** SPI Receive Buffer Full Interrupt Mode bits
11 = Interrupt is generated when the buffer is full
10 = Interrupt is generated when the buffer is full by one-half or more
01 = Interrupt is generated when the buffer is not empty
00 = Interrupt is generated when the last word in the receive buffer is read (i.e., buffer is empty)

Note 1: When using the 1:1 PBCLK divisor, the user software should not read or write the peripheral's SFRs in the SYSCLK cycle immediately following the instruction that clears the module's ON bit.

2: This bit can only be written when the ON bit = 0.

3: This bit is not used in the Framed SPI mode. The user should program this bit to '0' for the Framed SPI mode (FRMEN = 1).

4: When AUDEN = 1, the SPI module functions as if the CKP bit is equal to '1', regardless of the actual value of CKP.

© 2014-2019 Microchip Technology Inc.

REGISTER 17-2: SPIxCON2: SPI CONTROL REGISTER 2

Bit Range	Bit 31/23/15/7	Bit 30/22/14/6	Bit 29/21/13/5	Bit 28/20/12/4	Bit 27/19/11/3	Bit 26/18/10/2	Bit 25/17/9/1	Bit 24/16/8/0
31:24	U-0	U-0	U-0	U-0	U-0	U-0	U-0	U-0
	—	—	—	—	—	—	—	—
23:16	U-0	U-0	U-0	U-0	U-0	U-0	U-0	U-0
	—	—	—	—	—	—	—	—
15:8	R/W-0	U-0	U-0	R/W-0	R/W-0	R/W-0	R/W-0	R/W-0
	SPISGNEXT	—	—	FRMERREN	SPIROVEN	SPITUREN	IGNROV	IGNTUR
7:0	R/W-0	U-0	U-0	U-0	R/W-0	U-0	R/W-0	R/W-0
	AUDEN(1)	—	—	—	AUDMONO(1,2)	—	AUDMOD<1:0>(1,2)	

Legend:			
R = Readable bit	W = Writable bit	U = Unimplemented bit, read as ‘0’	
-n = Value at POR	‘1’ = Bit is set	‘0’ = Bit is cleared	x = Bit is unknown

bit 31-16 **Unimplemented:** Read as ‘0’

bit 15 **SPISGNEXT:** Sign Extend Read Data from the RX FIFO bit
1 = Data from RX FIFO is sign extended
0 = Data from RX FIFO is not sign extened

bit 14-13 **Unimplemented:** Read as ‘0’

bit 12 **FRMERREN:** Enable Interrupt Events via FRMERR bit
1 = Frame Error overflow generates error events
0 = Frame Error does not generate error events

bit 11 **SPIROVEN:** Enable Interrupt Events via SPIROV bit
1 = Receive overflow generates error events
0 = Receive overflow does not generate error events

bit 10 **SPITUREN:** Enable Interrupt Events via SPITUR bit
1 = Transmit Underrun Generates Error Events
0 = Transmit Underrun Does Not Generates Error Events

bit 9 **IGNROV:** Ignore Receive Overflow bit (for Audio Data Transmissions)
1 = A ROV is not a critical error; during ROV data in the fifo is not overwritten by receive data
0 = A ROV is a critical error which stop SPI operation

bit 8 **IGNTUR:** Ignore Transmit Underrun bit (for Audio Data Transmissions)
1 = A TUR is not a critical error and zeros are transmitted until the SPIxTXB is not empty
0 = A TUR is a critical error which stop SPI operation

bit 7 **AUDEN:** Enable Audio CODEC Support bit(1)
1 = Audio protocol enabled
0 = Audio protocol disabled

bit 6-5 **Unimplemented:** Read as ‘0’

bit 3 **AUDMONO:** Transmit Audio Data Format bit(1,2)
1 = Audio data is mono (Each data word is transmitted on both left and right channels)
0 = Audio data is stereo

bit 2 **Unimplemented:** Read as ‘0’

bit 1-0 **AUDMOD<1:0>:** Audio Protocol Mode bit(1,2)
11 = PCM/DSP mode
10 = Right Justified mode
01 = Left Justified mode
00 = I^2S mode

Note 1: This bit can only be written when the ON bit = 0.
2: This bit is only valid for AUDEN = 1.

REGISTER 17-3: SPIxSTAT: SPI STATUS REGISTER

Bit Range	Bit 31/23/15/7	Bit 30/22/14/6	Bit 29/21/13/5	Bit 28/20/12/4	Bit 27/19/11/3	Bit 26/18/10/2	Bit 25/17/9/1	Bit 24/16/8/0
31:24	U-0	U-0	U-0	R-0	R-0	R-0	R-0	R-0
	—	—	—	RXBUFELM<4:0>				
23:16	U-0	U-0	U-0	R-0	R-0	R-0	R-0	R-0
	—	—	—	TXBUFELM<4:0>				
15:8	U-0	U-0	U-0	R/C-0, HS	R-0	U-0	U-0	R-0
	—	—	—	FRMERR	SPIBUSY	—	—	SPITUR
7:0	R-0	R/W-0	R-0	U-0	R-1	U-0	R-0	R-0
	SRMT	SPIROV	SPIRBE	—	SPITBE	—	SPITBF	SPIRBF

Legend:	C = Clearable bit	HS = Set in hardware	
R = Readable bit	W = Writable bit	U = Unimplemented bit, read as ‘0’	
-n = Value at POR	‘1’ = Bit is set	‘0’ = Bit is cleared	x = Bit is unknown

bit 31-29 **Unimplemented:** Read as ‘0’

bit 28-24 **RXBUFELM<4:0>:** Receive Buffer Element Count bits (valid only when ENHBUF = 1)

bit 23-21 **Unimplemented:** Read as ‘0’

bit 20-16 **TXBUFELM<4:0>:** Transmit Buffer Element Count bits (valid only when ENHBUF = 1)

bit 15-13 **Unimplemented:** Read as ‘0’

bit 12 **FRMERR:** SPI Frame Error status bit
1 = Frame error detected
0 = No Frame error detected
This bit is only valid when FRMEN = 1.

bit 11 **SPIBUSY:** SPI Activity Status bit
1 = SPI peripheral is currently busy with some transactions
0 = SPI peripheral is currently idle

bit 10-9 **Unimplemented:** Read as ‘0’

bit 8 **SPITUR:** Transmit Under Run bit
1 = Transmit buffer has encountered an underrun condition
0 = Transmit buffer has no underrun condition
This bit is only valid in Framed Sync mode; the underrun condition must be cleared by disabling (ON bit = 0) and re-enabling (ON bit = 1) the module, or writing a ‘0’ to SPITUR.

bit 7 **SRMT:** Shift Register Empty bit (valid only when ENHBUF = 1)
1 = When SPI module shift register is empty
0 = When SPI module shift register is not empty

bit 6 **SPIROV:** Receive Overflow Flag bit
1 = A new data is completely received and discarded. The user software has not read the previous data in the SPIxBUF register.
0 = No overflow has occurred
This bit is set in hardware; can bit only be cleared by disabling (ON bit = 0) and re-enabling (ON bit = 1) the module, or by writing a ‘0’ to SPIROV.

bit 5 **SPIRBE:** RX FIFO Empty bit (valid only when ENHBUF = 1)
1 = RX FIFO is empty (CRPTR = SWPTR)
0 = RX FIFO is not empty (CRPTR ≠ SWPTR)

bit 4 **Unimplemented:** Read as ‘0’

© 2014-2019 Microchip Technology Inc.

REGISTER 17-3: SPIxSTAT: SPI STATUS REGISTER (CONTINUED)

bit 3 **SPITBE:** SPI Transmit Buffer Empty Status bit
1 = Transmit buffer, SPIxTXB is empty
0 = Transmit buffer, SPIxTXB is not empty
Automatically set in hardware when SPI transfers data from SPIxTXB to SPIxSR.
Automatically cleared in hardware when SPIxBUF is written to, loading SPIxTXB.

bit 2 **Unimplemented:** Read as '0'

bit 1 **SPITBF:** SPI Transmit Buffer Full Status bit
1 = Transmit not yet started, SPITXB is full
0 = Transmit buffer is not full
Standard Buffer Mode:
Automatically set in hardware when the core writes to the SPIBUF location, loading SPITXB.
Automatically cleared in hardware when the SPI module transfers data from SPITXB to SPISR.
Enhanced Buffer Mode:
Set when CWPTR + 1 = SRPTR; cleared otherwise

bit 0 **SPIRBF:** SPI Receive Buffer Full Status bit
1 = Receive buffer, SPIxRXB is full
0 = Receive buffer, SPIxRXB is not full
Standard Buffer Mode:
Automatically set in hardware when the SPI module transfers data from SPIxSR to SPIxRXB.
Automatically cleared in hardware when SPIxBUF is read from, reading SPIxRXB.
Enhanced Buffer Mode:
Set when SWPTR + 1 = CRPTR; cleared otherwise

NOTES:

© 2014-2019 Microchip Technology Inc.

18.0 INTER-INTEGRATED CIRCUIT (I^2C)

Note: This data sheet summarizes the features of the PIC32MX1XX/2XX/5XX 64/100-pin family of devices. It is not intended to be a comprehensive reference source. To complement the information in this data sheet, refer to **Section 24. "Inter-Integrated Circuit (I^2C)"** (DS60001116) in the *"PIC32 Family Reference Manual"*, which is available from the Microchip web site (www.microchip.com/PIC32).

The I^2C module provides complete hardware support for both Slave and Multi-Master modes of the I^2C serial communication standard. Figure 18-1 illustrates the I^2C module block diagram.

Each I^2C module has a 2-pin interface: the SCLx pin is clock and the SDAx pin is data.

Each I^2C module offers the following key features:

- I^2C interface supporting both master and slave operation
- I^2C Slave mode supports 7-bit and 10-bit addressing
- I^2C Master mode supports 7-bit and 10-bit addressing
- I^2C port allows bidirectional transfers between master and slaves
- Serial clock synchronization for the I^2C port can be used as a handshake mechanism to suspend and resume serial transfer (SCLREL control)
- I^2C supports multi-master operation; detects bus collision and arbitrates accordingly
- Provides support for address bit masking

FIGURE 18-1: I²C BLOCK DIAGRAM

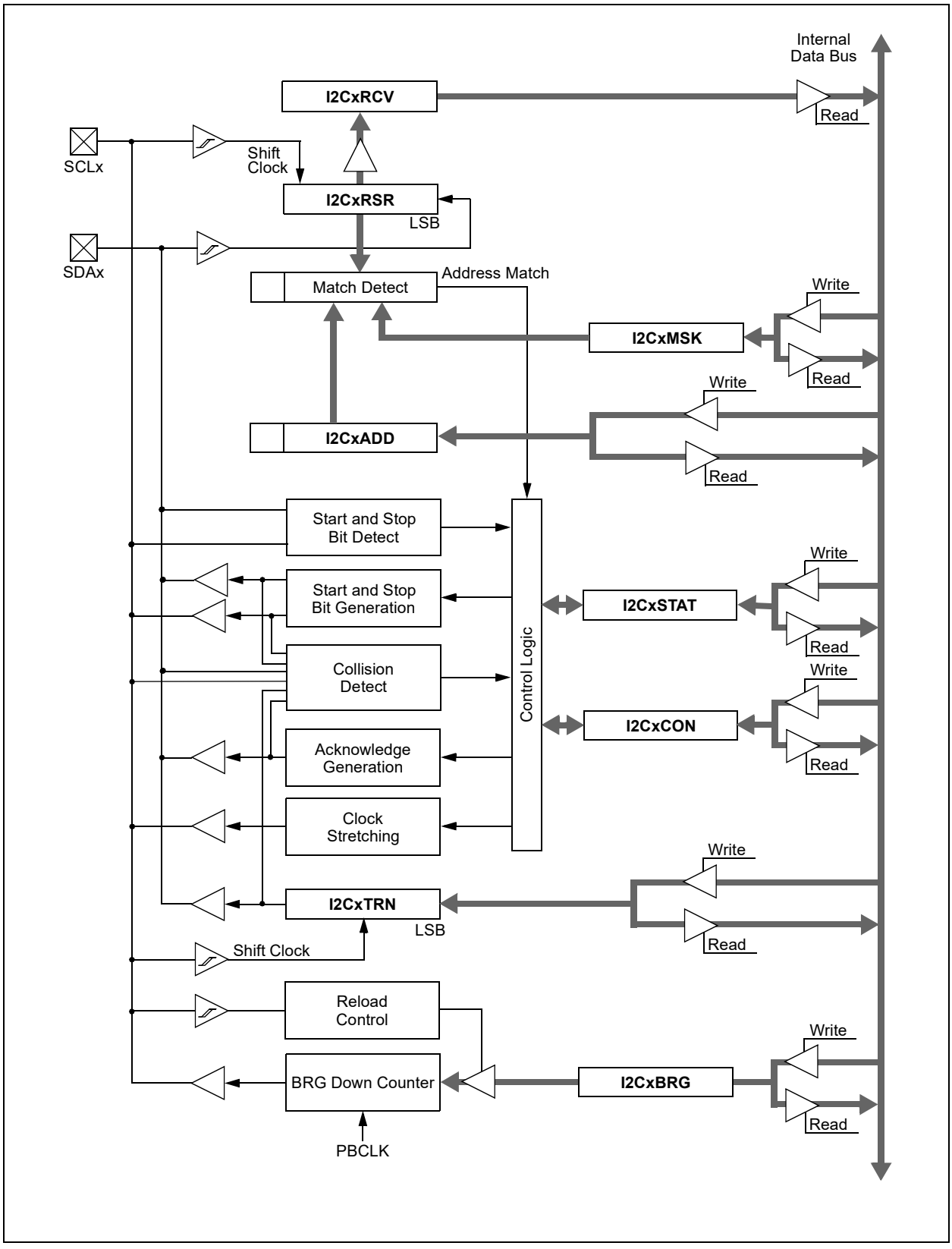

© 2014-2019 Microchip Technology Inc.

18.1 Control Registers

TABLE 18-1: I2C1 AND I2C2 REGISTER MAP

Virtual Address (BF80_#)	Register Name(1)	Bit Range	Bits 31/15	30/14	29/13	28/12	27/11	26/10	25/9	24/8	23/7	22/6	21/5	20/4	19/3	18/2	17/1	16/0	All Resets
5000	I2C1CON	31:16	—	—	—	—	—	—	—	—	—	—	—	—	—	—	—	—	0000
		15:0	ON	—	SIDL	SCLREL	STRICT	A10M	DISSLW	SMEN	GCEN	STREN	ACKDT	ACKEN	RCEN	PEN	RSEN	SEN	BFFF
5010	I2C1STAT	31:16	—	—	—	—	—	—	—	—	—	—	—	—	—	—	—	—	0000
		15:0	ACKSTAT	TRSTAT	—	—	—	BCL	GCSTAT	ADD10	IWCOL	I2COV	D_A	P	S	R_W	RBF	TBF	0000
5020	I2C1ADD	31:16	—	—	—	—	—	—	—	—	—	—	—	—	—	—	—	—	0000
		15:0	—	—	—	—	—	—	Address Register										0000
5030	I2C1MSK	31:16	—	—	—	—	—	—	—	—	—	—	—	—	—	—	—	—	0000
		15:0	—	—	—	—	—	—	Address Mask Register										0000
5040	I2C1BRG	31:16	—	—	—	—	—	—	—	—	—	—	—	—	—	—	—	—	0000
		15:0	—	—	—	—	Baud Rate Generator Register												0000
5050	I2C1TRN	31:16	—	—	—	—	—	—	—	—	—	—	—	—	—	—	—	—	0000
		15:0	—	—	—	—	—	—	—	—	Transmit Register								0000
5060	I2C1RCV	31:16	—	—	—	—	—	—	—	—	—	—	—	—	—	—	—	—	0000
		15:0	—	—	—	—	—	—	—	—	Receive Register								0000
5100	I2C2CON	31:16	—	—	—	—	—	—	—	—	—	—	—	—	—	—	—	—	0000
		15:0	ON	—	SIDL	SCLREL	STRICT	A10M	DISSLW	SMEN	GCEN	STREN	ACKDT	ACKEN	RCEN	PEN	RSEN	SEN	BFFF
5110	I2C2STAT	31:16	—	—	—	—	—	—	—	—	—	—	—	—	—	—	—	—	0000
		15:0	ACKSTAT	TRSTAT	—	—	—	BCL	GCSTAT	ADD10	IWCOL	I2COV	D_A	P	S	R_W	RBF	TBF	0000
5120	I2C2ADD	31:16	—	—	—	—	—	—	—	—	—	—	—	—	—	—	—	—	0000
		15:0	—	—	—	—	—	—	Address Register										0000
5130	I2C2MSK	31:16	—	—	—	—	—	—	—	—	—	—	—	—	—	—	—	—	0000
		15:0	—	—	—	—	—	—	Address Mask Register										0000
5140	I2C2BRG	31:16	—	—	—	—	—	—	—	—	—	—	—	—	—	—	—	—	0000
		15:0	—	—	—	—	Baud Rate Generator Register												0000
5150	I2C2TRN	31:16	—	—	—	—	—	—	—	—	—	—	—	—	—	—	—	—	0000
		15:0	—	—	—	—	—	—	—	—	Transmit Register								0000
5160	I2C2RCV	31:16	—	—	—	—	—	—	—	—	—	—	—	—	—	—	—	—	0000
		15:0	—	—	—	—	—	—	—	—	Receive Register								0000

Legend: x = unknown value on Reset; — = unimplemented, read as ‘0’. Reset values are shown in hexadecimal.

Note 1: All registers in this table except I2CxRCV have corresponding CLR, SET and INV registers at their virtual addresses, plus offsets of 0x4, 0x8 and 0xC, respectively. See **Section 11.2 “CLR, SET, and INV Registers”** for more information.

© 2014-2019 Microchip Technology Inc.

REGISTER 18-1: I2CxCON: I^{2}C 'x' CONTROL REGISTER ('x' = 1 AND 2)

Bit Range	Bit 31/23/15/7	Bit 30/22/14/6	Bit 29/21/13/5	Bit 28/20/12/4	Bit 27/19/11/3	Bit 26/18/10/2	Bit 25/17/9/1	Bit 24/16/8/0
31:24	U-0	U-0	U-0	U-0	U-0	U-0	U-0	U-0
	—	—	—	—	—	—	—	—
23:16	U-0	U-0	U-0	U-0	U-0	U-0	U-0	U-0
	—	—	—	—	—	—	—	—
15:8	R/W-0	U-0	R/W-0	R/W-1, HC	R/W-0	R/W-0	R/W-0	R/W-0
	ON(1)	—	SIDL	SCLREL	STRICT	A10M	DISSLW	SMEN
7:0	R/W-0	R/W-0	R/W-0	R/W-0, HC	R/W-0, HC	R/W-0, HC	R/W-0, HC	R/W-0, HC
	GCEN	STREN	ACKDT	ACKEN	RCEN	PEN	RSEN	SEN

Legend:	HC = Cleared in Hardware		
R = Readable bit	W = Writable bit	U = Unimplemented bit, read as '0'	
-n = Value at POR	'1' = Bit is set	'0' = Bit is cleared	x = Bit is unknown

bit 31-16 **Unimplemented:** Read as '0'

bit 15 **ON:** I^{2}C Enable bit(1)
- 1 = Enables the I^{2}C module and configures the SDA and SCL pins as serial port pins
- 0 = Disables the I^{2}C module; all I^{2}C pins are controlled by PORT functions

bit 14 **Unimplemented:** Read as '0'

bit 13 **SIDL:** Stop in Idle Mode bit
- 1 = Discontinue module operation when device enters Idle mode
- 0 = Continue module operation in Idle mode

bit 12 **SCLREL:** SCLx Release Control bit (when operating as I^{2}C slave)
- 1 = Release SCLx clock
- 0 = Hold SCLx clock low (clock stretch)

If STREN = 1:
Bit is R/W (i.e., software can write '0' to initiate stretch and write '1' to release clock). Hardware clear at beginning of slave transmission. Hardware clear at end of slave reception.

If STREN = 0:
Bit is R/S (i.e., software can only write '1' to release clock). Hardware clear at beginning of slave transmission.

bit 11 **STRICT:** Strict I^{2}C Reserved Address Rule Enable bit
- 1 = Strict reserved addressing is enforced. Device does not respond to reserved address space or generate addresses in reserved address space.
- 0 = Strict I^{2}C Reserved Address Rule not enabled

bit 10 **A10M:** 10-bit Slave Address bit
- 1 = I2CxADD is a 10-bit slave address
- 0 = I2CxADD is a 7-bit slave address

bit 9 **DISSLW:** Disable Slew Rate Control bit
- 1 = Slew rate control disabled
- 0 = Slew rate control enabled

bit 8 **SMEN:** SMBus Input Levels bit
- 1 = Enable I/O pin thresholds compliant with SMBus specification
- 0 = Disable SMBus input thresholds

Note 1: When using 1:1 PBCLK divisor, the user software should not read/write the peripheral's SFRs in the SYSCLK cycle immediately following the instruction that clears the module's ON bit.

© 2014-2019 Microchip Technology Inc.

REGISTER 18-1: I2CxCON: I^{2}C 'x' CONTROL REGISTER (CONTINUED)('x' = 1 AND 2)

bit 7 **GCEN:** General Call Enable bit (when operating as I^{2}C slave)
1 = Enable interrupt when a general call address is received in the I2CxRSR (module is enabled for reception)
0 = General call address disabled

bit 6 **STREN:** SCLx Clock Stretch Enable bit (when operating as I^{2}C slave)
Used in conjunction with SCLREL bit.
1 = Enable software or receive clock stretching
0 = Disable software or receive clock stretching

bit 5 **ACKDT:** Acknowledge Data bit (when operating as I^{2}C master, applicable during master receive)
Value that is transmitted when the software initiates an Acknowledge sequence.
1 = Send NACK during Acknowledge
0 = Send ACK during Acknowledge

bit 4 **ACKEN:** Acknowledge Sequence Enable bit
(when operating as I^{2}C master, applicable during master receive)
1 = Initiate Acknowledge sequence on SDAx and SCLx pins and transmit ACKDT data bit. Hardware clear at end of master Acknowledge sequence.
0 = Acknowledge sequence not in progress

bit 3 **RCEN:** Receive Enable bit (when operating as I^{2}C master)
1 = Enables Receive mode for I^{2}C. Hardware clear at end of eighth bit of master receive data byte.
0 = Receive sequence not in progress

bit 2 **PEN:** Stop Condition Enable bit (when operating as I^{2}C master)
1 = Initiate Stop condition on SDAx and SCLx pins. Hardware clear at end of master Stop sequence.
0 = Stop condition not in progress

bit 1 **RSEN:** Repeated Start Condition Enable bit (when operating as I^{2}C master)
1 = Initiate Repeated Start condition on SDAx and SCLx pins. Hardware clear at end of master Repeated Start sequence.
0 = Repeated Start condition not in progress

bit 0 **SEN:** Start Condition Enable bit (when operating as I^{2}C master)
1 = Initiate Start condition on SDAx and SCLx pins. Hardware clear at end of master Start sequence.
0 = Start condition not in progress

Note 1: When using 1:1 PBCLK divisor, the user software should not read/write the peripheral's SFRs in the SYSCLK cycle immediately following the instruction that clears the module's ON bit.

REGISTER 18-2: I2CxSTAT: I^{2}C STATUS REGISTER

Bit Range	Bit 31/23/15/7	Bit 30/22/14/6	Bit 29/21/13/5	Bit 28/20/12/4	Bit 27/19/11/3	Bit 26/18/10/2	Bit 25/17/9/1	Bit 24/16/8/0
31:24	U-0	U-0	U-0	U-0	U-0	U-0	U-0	U-0
	—	—	—	—	—	—	—	—
23:16	U-0	U-0	U-0	U-0	U-0	U-0	U-0	U-0
	—	—	—	—	—	—	—	—
15:8	R-0, HSC	R-0, HSC	U-0	U-0	U-0	R/C-0, HS	R-0, HSC	R-0, HSC
	ACKSTAT	TRSTAT	—	—	—	BCL	GCSTAT	ADD10
7:0	R/C-0, HS	R/C-0, HS	R-0, HSC	R/C-0, HSC	R/C-0, HSC	R-0, HSC	R-0, HSC	R-0, HSC
	IWCOL	I2COV	D_A	P	S	R_W	RBF	TBF

Legend:	HS = Set in hardware	HSC = Hardware set/cleared	
R = Readable bit	W = Writable bit	U = Unimplemented bit, read as ‘0’	
-n = Value at POR	‘1’ = Bit is set	‘0’ = Bit is cleared	C = Clearable bit

bit 31-16 **Unimplemented:** Read as ‘0’

bit 15 **ACKSTAT:** Acknowledge Status bit
(when operating as I^{2}C master, applicable to master transmit operation)
1 = Acknowledge was not received from slave
0 = Acknowledge was received from slave
Hardware set or clear at end of slave Acknowledge.

bit 14 **TRSTAT:** Transmit Status bit (when operating as I^{2}C master, applicable to master transmit operation)
1 = Master transmit is in progress (8 bits + ACK)
0 = Master transmit is not in progress
Hardware set at beginning of master transmission. Hardware clear at end of slave Acknowledge.

bit 13-11 **Unimplemented:** Read as ‘0’

bit 10 **BCL:** Master Bus Collision Detect bit
1 = A bus collision has been detected during a master operation
0 = No collision
Hardware set at detection of bus collision. This condition can only be cleared by disabling (ON bit = 0) and re-enabling (ON bit = 1) the module.

bit 9 **GCSTAT:** General Call Status bit
1 = General call address was received
0 = General call address was not received
Hardware set when address matches general call address. Hardware clear at Stop detection.

bit 8 **ADD10:** 10-bit Address Status bit
1 = 10-bit address was matched
0 = 10-bit address was not matched
Hardware set at match of 2nd byte of matched 10-bit address. Hardware clear at Stop detection.

bit 7 **IWCOL:** Write Collision Detect bit
1 = An attempt to write the I2CxTRN register failed because the I^{2}C module is busy
0 = No collision
Hardware set at occurrence of write to I2CxTRN while busy (cleared by software).

bit 6 **I2COV:** Receive Overflow Flag bit
1 = A byte was received while the I2CxRCV register is still holding the previous byte
0 = No overflow
Hardware set at attempt to transfer I2CxRSR to I2CxRCV (cleared by software).

bit 5 **D_A:** Data/Address bit (when operating as I^{2}C slave)
1 = Indicates that the last byte received was data
0 = Indicates that the last byte received was device address
Hardware clear at device address match. Hardware set by reception of slave byte.

© 2014-2019 Microchip Technology Inc.

REGISTER 18-2: I2CxSTAT: I^{2}C STATUS REGISTER (CONTINUED)

bit 4 **P:** Stop bit
1 = Indicates that a Stop bit has been detected last
0 = Stop bit was not detected last
Hardware set or clear when Start, Repeated Start or Stop detected.

bit 3 **S:** Start bit
1 = Indicates that a Start (or Repeated Start) bit has been detected last
0 = Start bit was not detected last
Hardware set or clear when Start, Repeated Start or Stop detected.

bit 2 **R_W:** Read/Write Information bit (when operating as I^{2}C slave)
1 = Read – indicates data transfer is output from slave
0 = Write – indicates data transfer is input to slave
Hardware set or clear after reception of I^{2}C device address byte.

bit 1 **RBF:** Receive Buffer Full Status bit
1 = Receive complete, I2CxRCV is full
0 = Receive not complete, I2CxRCV is empty
Hardware set when I2CxRCV is written with received byte. Hardware clear when software reads I2CxRCV.

bit 0 **TBF:** Transmit Buffer Full Status bit
1 = Transmit in progress, I2CxTRN is full
0 = Transmit complete, I2CxTRN is empty
Hardware set when software writes I2CxTRN. Hardware clear at completion of data transmission.

NOTES:

© 2014-2019 Microchip Technology Inc.

19.0 UNIVERSAL ASYNCHRONOUS RECEIVER TRANSMITTER (UART)

Note: This data sheet summarizes the features of the PIC32MX1XX/2XX/5XX 64/100-pin family of devices. It is not intended to be a comprehensive reference source. To complement the information in this data sheet, refer to **Section 21. "Universal Asynchronous Receiver Transmitter (UART)"** (DS60001107) in the *"PIC32 Family Reference Manual"*, which is available from the Microchip web site (www.microchip.com/PIC32).

The UART module is one of the serial I/O modules available in PIC32MX1XX/2XX/5XX 64/100-pin family devices. The UART is a full-duplex, asynchronous communication channel that communicates with peripheral devices and personal computers through protocols, such as RS-232, RS-485, LIN and IrDA®. The module also supports the hardware flow control option, with $\overline{\text{UxCTS}}$ and $\overline{\text{UxRTS}}$ pins, and also includes an IrDA encoder and decoder.

The primary features of the UART module are:

- Full-duplex, 8-bit or 9-bit data transmission
- Even, odd or no parity options (for 8-bit data)
- One or two Stop bits
- Hardware auto-baud feature
- Hardware flow control option
- Fully integrated Baud Rate Generator (BRG) with 16-bit prescaler
- Baud rates ranging from 38 bps to 12.5 Mbps at 50 MHz
- 8-level deep First-In-First-Out (FIFO) transmit data buffer
- 8-level deep FIFO receive data buffer
- Parity, framing and buffer overrun error detection
- Support for interrupt-only on address detect (9th bit = 1)
- Separate transmit and receive interrupts
- Loopback mode for diagnostic support
- LIN Protocol support
- IrDA encoder and decoder with 16x baud clock output for external IrDA encoder/decoder support

Figure 19-1 illustrates a simplified block diagram of the UART.

FIGURE 19-1: UART SIMPLIFIED BLOCK DIAGRAM

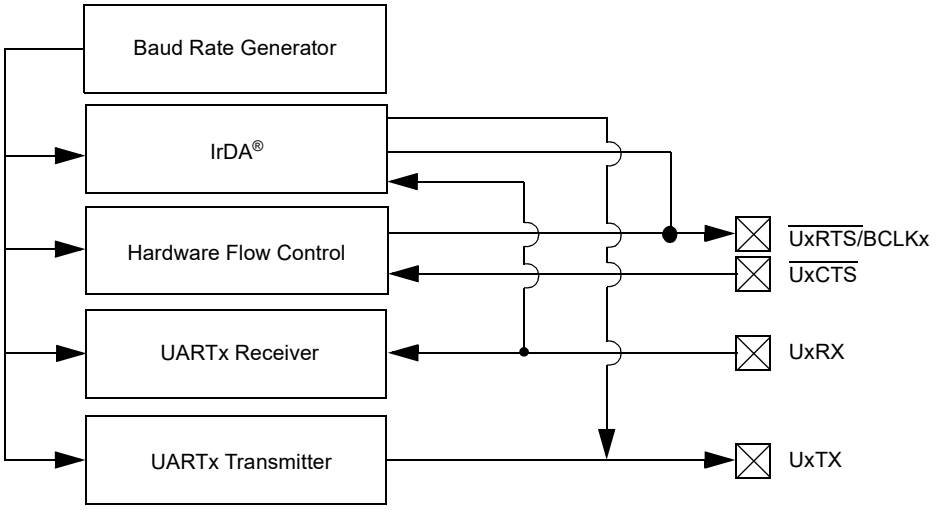

Note: Not all pins are available for all UART modules. Refer to the device-specific pin diagram for more information.

19.1 Control Registers

TABLE 19-1: UART1 THROUGH UART5 REGISTER MAP

Virtual Address (BF80_#)	Register Name	Bit Range	Bits 31/15	30/14	29/13	28/12	27/11	26/10	25/9	24/8	23/7	22/6	21/5	20/4	19/3	18/2	17/1	16/0	All Resets
6000	U1MODE(1)	31:16	—	—	—	—	—	—	—	—	—	—	—	—	—	—	—	—	0000
		15:0	ON	—	SIDL	IREN	RTSMD	—	UEN<1:0>		WAKE	LPBACK	ABAUD	RXINV	BRGH	PDSEL<1:0>		STSEL	0000
6010	U1STA(1)	31:16	—	—	—	—	—	—	—	ADM_EN	ADDR<7:0>								0000
		15:0	UTXISEL<1:0>		UTXINV	URXEN	UTXBRK	UTXEN	UTXBF	TRMT	URXISEL<1:0>		ADDEN	RIDLE	PERR	FERR	OERR	URXDA	FFFF
6020	U1TXREG	31:16	—	—	—	—	—	—	—	—	—	—	—	—	—	—	—	—	0000
		15:0	—	—	—	—	—	—	—	TX8	Transmit Register								0000
6030	U1RXREG	31:16	—	—	—	—	—	—	—	—	—	—	—	—	—	—	—	—	0000
		15:0	—	—	—	—	—	—	—	RX8	Receive Register								0000
6040	U1BRG(1)	31:16	—	—	—	—	—	—	—	—	—	—	—	—	—	—	—	—	0000
		15:0	Baud Rate Generator Prescaler																0000
6200	U2MODE(1)	31:16	—	—	—	—	—	—	—	—	—	—	—	—	—	—	—	—	0000
		15:0	ON	—	SIDL	IREN	RTSMD	—	UEN<1:0>		WAKE	LPBACK	ABAUD	RXINV	BRGH	PDSEL<1:0>		STSEL	0000
6210	U2STA(1)	31:16	—	—	—	—	—	—	—	ADM_EN	ADDR<7:0>								0000
		15:0	UTXISEL<1:0>		UTXINV	URXEN	UTXBRK	UTXEN	UTXBF	TRMT	URXISEL<1:0>		ADDEN	RIDLE	PERR	FERR	OERR	URXDA	FFFF
6220	U2TXREG	31:16	—	—	—	—	—	—	—	—	—	—	—	—	—	—	—	—	0000
		15:0	—	—	—	—	—	—	—	TX8	Transmit Register								0000
6230	U2RXREG	31:16	—	—	—	—	—	—	—	—	—	—	—	—	—	—	—	—	0000
		15:0	—	—	—	—	—	—	—	RX8	Receive Register								0000
6240	U2BRG(1)	31:16	—	—	—	—	—	—	—	—	—	—	—	—	—	—	—	—	0000
		15:0	Baud Rate Generator Prescaler																0000
6400	U3MODE(1)	31:16	—	—	—	—	—	—	—	—	—	—	—	—	—	—	—	—	0000
		15:0	ON	—	SIDL	IREN	RTSMD	—	UEN<1:0>		WAKE	LPBACK	ABAUD	RXINV	BRGH	PDSEL<1:0>		STSEL	0000
6410	U3STA(1)	31:16	—	—	—	—	—	—	—	ADM_EN	ADDR<7:0>								0000
		15:0	UTXISEL<1:0>		UTXINV	URXEN	UTXBRK	UTXEN	UTXBF	TRMT	URXISEL<1:0>		ADDEN	RIDLE	PERR	FERR	OERR	URXDA	FFFF
6420	U3TXREG	31:16	—	—	—	—	—	—	—	—	—	—	—	—	—	—	—	—	0000
		15:0	—	—	—	—	—	—	—	TX8	Transmit Register								0000
6430	U3RXREG	31:16	—	—	—	—	—	—	—	—	—	—	—	—	—	—	—	—	0000
		15:0	—	—	—	—	—	—	—	RX8	Receive Register								0000

Legend: x = unknown value on Reset; — = unimplemented, read as ‘0’. Reset values are shown in hexadecimal.

Note 1: This register has corresponding CLR, SET and INV registers at its virtual address, plus an offset of 0x4, 0x8 and 0xC, respectively. See **Section 11.2 “CLR, SET, and INV Registers”** for more information.

2: This register is only available on 100-pin devices.

© 2014-2019 Microchip Technology Inc.

TABLE 19-1: UART1 THROUGH UART5 REGISTER MAP (CONTINUED)

Virtual Address (BF80_#)	Register Name	Bit Range	Bits 31/15	30/14	29/13	28/12	27/11	26/10	25/9	24/8	23/7	22/6	21/5	20/4	19/3	18/2	17/1	16/0	All Resets
6440	U3BRG(1)	31:16	—	—	—	—	—	—	—	—	—	—	—	—	—	—	—	—	0000
		15:0	Baud Rate Generator Prescaler																0000
6600	U4MODE(1)	31:16	—	—	—	—	—	—	—	—	—	—	—	—	—	—	—	—	0000
		15:0	ON	—	SIDL	IREN	RTSMD	—	UEN<1:0>		WAKE	LPBACK	ABAUD	RXINV	BRGH	PDSEL<1:0>		STSEL	0000
6610	U4STA(1)	31:16	—	—	—	—	—	—	—	ADM_EN	ADDR<7:0>								0000
		15:0	UTXISEL<1:0>		UTXINV	URXEN	UTXBRK	UTXEN	UTXBF	TRMT	URXISEL<1:0>		ADDEN	RIDLE	PERR	FERR	OERR	URXDA	FFFF
6620	U4TXREG	31:16	—	—	—	—	—	—	—	—	—	—	—	—	—	—	—	—	0000
		15:0	—	—	—	—	—	—	—	TX8	Transmit Register								0000
6630	U4RXREG	31:16	—	—	—	—	—	—	—	—	—	—	—	—	—	—	—	—	0000
		15:0	—	—	—	—	—	—	—	RX8	Receive Register								0000
6640	U4BRG(1)	31:16	—	—	—	—	—	—	—	—	—	—	—	—	—	—	—	—	0000
		15:0	Baud Rate Generator Prescaler																0000
6800	U5MODE(1,2)	31:16	—	—	—	—	—	—	—	—	—	—	—	—	—	—	—	—	0000
		15:0	ON	—	SIDL	IREN	RTSMD	—	UEN<1:0>		WAKE	LPBACK	ABAUD	RXINV	BRGH	PDSEL<1:0>		STSEL	0000
6810	U5STA(1,2)	31:16	—	—	—	—	—	—	—	ADM_EN	ADDR<7:0>								0000
		15:0	UTXISEL<1:0>		UTXINV	URXEN	UTXBRK	UTXEN	UTXBF	TRMT	URXISEL<1:0>		ADDEN	RIDLE	PERR	FERR	OERR	URXDA	FFFF
6820	U5TXREG(1,2)	31:16	—	—	—	—	—	—	—	—	—	—	—	—	—	—	—	—	0000
		15:0	—	—	—	—	—	—	—	TX8	Transmit Register								0000
6830	U5RXREG(1,2)	31:16	—	—	—	—	—	—	—	—	—	—	—	—	—	—	—	—	0000
		15:0	—	—	—	—	—	—	—	RX8	Receive Register								0000
6840	U5BRG(1,2)	31:16	—	—	—	—	—	—	—	—	—	—	—	—	—	—	—	—	0000
		15:0	Baud Rate Generator Prescaler																0000

Legend: x = unknown value on Reset; — = unimplemented, read as ‘0’. Reset values are shown in hexadecimal.

Note 1: This register has corresponding CLR, SET and INV registers at its virtual address, plus an offset of 0x4, 0x8 and 0xC, respectively. See **Section 11.2 “CLR, SET, and INV Registers”** for more information.

2: This register is only available on 100-pin devices.

© 2014-2019 Microchip Technology Inc.

REGISTER 19-1: UxMODE: UARTx MODE REGISTER

Bit Range	Bit 31/23/15/7	Bit 30/22/14/6	Bit 29/21/13/5	Bit 28/20/12/4	Bit 27/19/11/3	Bit 26/18/10/2	Bit 25/17/9/1	Bit 24/16/8/0
31:24	U-0	U-0	U-0	U-0	U-0	U-0	U-0	U-0
	—	—	—	—	—	—	—	—
23:16	U-0	U-0	U-0	U-0	U-0	U-0	U-0	U-0
	—	—	—	—	—	—	—	—
15:8	R/W-0	U-0	R/W-0	R/W-0	R/W-0	U-0	R/W-0	R/W-0
	ON(1)	—	SIDL	IREN	RTSMD	—	UEN<1:0>	
7:0	R/W-0	R/W-0	R/W-0	R/W-0	R/W-0	R/W-0	R/W-0	R/W-0
	WAKE	LPBACK	ABAUD	RXINV	BRGH	PDSEL<1:0>		STSEL

Legend:			
R = Readable bit	W = Writable bit	U = Unimplemented bit, read as ‘0’	
-n = Value at POR	‘1’ = Bit is set	‘0’ = Bit is cleared	x = Bit is unknown

bit 31-16 **Unimplemented:** Read as ‘0’

bit 15 **ON:** UARTx Enable bit(1)
- 1 = UARTx is enabled. UARTx pins are controlled by UARTx as defined by UEN<1:0> and UTXEN control bits
- 0 = UARTx is disabled. All UARTx pins are controlled by corresponding bits in the PORTx, TRISx and LATx registers; UARTx power consumption is minimal

bit 14 **Unimplemented:** Read as ‘0’

bit 13 **SIDL:** Stop in Idle Mode bit
- 1 = Discontinue operation when device enters Idle mode
- 0 = Continue operation in Idle mode

bit 12 **IREN:** IrDA Encoder and Decoder Enable bit
- 1 = IrDA is enabled
- 0 = IrDA is disabled

bit 11 **RTSMD:** Mode Selection for $\overline{\text{UxRTS}}$ Pin bit
- 1 = $\overline{\text{UxRTS}}$ pin is in Simplex mode
- 0 = $\overline{\text{UxRTS}}$ pin is in Flow Control mode

bit 10 **Unimplemented:** Read as ‘0’

bit 9-8 **UEN<1:0>:** UARTx Enable bits
- 11 = UxTX, UxRX and UxBCLK pins are enabled and used; $\overline{\text{UxCTS}}$ pin is controlled by corresponding bits in the PORTx register
- 10 = UxTX, UxRX, $\overline{\text{UxCTS}}$ and $\overline{\text{UxRTS}}$ pins are enabled and used
- 01 = UxTX, UxRX and $\overline{\text{UxRTS}}$ pins are enabled and used; $\overline{\text{UxCTS}}$ pin is controlled by corresponding bits in the PORTx register
- 00 = UxTX and UxRX pins are enabled and used; $\overline{\text{UxCTS}}$ and $\overline{\text{UxRTS}}$/UxBCLK pins are controlled by corresponding bits in the PORTx register

bit 7 **WAKE:** Enable Wake-up on Start bit Detect During Sleep Mode bit
- 1 = Wake-up enabled
- 0 = Wake-up disabled

bit 6 **LPBACK:** UARTx Loopback Mode Select bit
- 1 = Loopback mode is enabled
- 0 = Loopback mode is disabled

Note 1: When using 1:1 PBCLK divisor, the user software should not read/write the peripheral SFRs in the SYSCLK cycle immediately following the instruction that clears the module’s ON bit.

© 2014-2019 Microchip Technology Inc.

REGISTER 19-1: UxMODE: UARTx MODE REGISTER (CONTINUED)

bit 5 **ABAUD:** Auto-Baud Enable bit
1 = Enable baud rate measurement on the next character – requires reception of Sync character (0x55); cleared by hardware upon completion
0 = Baud rate measurement disabled or completed

bit 4 **RXINV:** Receive Polarity Inversion bit
1 = UxRX Idle state is '0'
0 = UxRX Idle state is '1'

bit 3 **BRGH:** High Baud Rate Enable bit
1 = High-Speed mode – 4x baud clock enabled
0 = Standard Speed mode – 16x baud clock enabled

bit 2-1 **PDSEL<1:0>:** Parity and Data Selection bits
11 = 9-bit data, no parity
10 = 8-bit data, odd parity
01 = 8-bit data, even parity
00 = 8-bit data, no parity

bit 0 **STSEL:** Stop Selection bit
1 = 2 Stop bits
0 = 1 Stop bit

Note 1: When using 1:1 PBCLK divisor, the user software should not read/write the peripheral SFRs in the SYSCLK cycle immediately following the instruction that clears the module's ON bit.

REGISTER 19-2: UxSTA: UARTx STATUS AND CONTROL REGISTER

Bit Range	Bit 31/23/15/7	Bit 30/22/14/6	Bit 29/21/13/5	Bit 28/20/12/4	Bit 27/19/11/3	Bit 26/18/10/2	Bit 25/17/9/1	Bit 24/16/8/0
31:24	U-0	U-0	U-0	U-0	U-0	U-0	U-0	R/W-0
	—	—	—	—	—	—	—	ADM_EN
23:16	R/W-0	R/W-0	R/W-0	R/W-0	R/W-0	R/W-0	R/W-0	R/W-0
	ADDR<7:0>							
15:8	R/W-0	R/W-0	R/W-0	R/W-0	R/W-0	R/W-0	R-0	R-1
	UTXISEL<1:0>		UTXINV	URXEN	UTXBRK	UTXEN	UTXBF	TRMT
7:0	R/W-0	R/W-0	R/W-0	R-1	R-0	R-0	R/W-0	R-0
	URXISEL<1:0>		ADDEN	RIDLE	PERR	FERR	OERR	URXDA

Legend:			
R = Readable bit	W = Writable bit	U = Unimplemented bit, read as ‘0’	
-n = Value at POR	‘1’ = Bit is set	‘0’ = Bit is cleared	x = Bit is unknown

bit 31-25 **Unimplemented:** Read as ‘0’

bit 24 **ADM_EN:** Automatic Address Detect Mode Enable bit
1 = Automatic Address Detect mode is enabled
0 = Automatic Address Detect mode is disabled

bit 23-16 **ADDR<7:0>:** Automatic Address Mask bits
When the ADM_EN bit is ‘1’, this value defines the address character to use for automatic address detection.

bit 15-14 **UTXISEL<1:0>:** TX Interrupt Mode Selection bits
11 = Reserved, do not use
10 = Interrupt is generated and asserted while the transmit buffer is empty
01 = Interrupt is generated and asserted when all characters have been transmitted
00 =Interrupt is generated and asserted while the transmit buffer contains at least one empty space

bit 13 **UTXINV:** Transmit Polarity Inversion bit
If IrDA mode is disabled (i.e., IREN (UxMODE<12>) is ‘0’):
1 = UxTX Idle state is ‘0’
0 = UxTX Idle state is ‘1’

If IrDA mode is enabled (i.e., IREN (UxMODE<12>) is ‘1’):
1 = IrDA encoded UxTX Idle state is ‘1’
0 = IrDA encoded UxTX Idle state is ‘0’

bit 12 **URXEN:** Receiver Enable bit
1 = UARTx receiver is enabled. UxRX pin is controlled by UARTx (if ON = 1)
0 = UARTx receiver is disabled. UxRX pin is ignored by the UARTx module. UxRX pin is controlled by the port.

bit 11 **UTXBRK:** Transmit Break bit
1 = Send Break on next transmission. Start bit followed by twelve ‘0’ bits, followed by Stop bit; cleared by hardware upon completion
0 = Break transmission is disabled or completed

bit 10 **UTXEN:** Transmit Enable bit
1 = UARTx transmitter is enabled. UxTX pin is controlled by UARTx (if ON = 1)
0 = UARTx transmitter is disabled. Any pending transmission is aborted and buffer is reset. UxTX pin is controlled by the port.

bit 9 **UTXBF:** Transmit Buffer Full Status bit (read-only)
1 = Transmit buffer is full
0 = Transmit buffer is not full, at least one more character can be written

© 2014-2019 Microchip Technology Inc.

REGISTER 19-2: UxSTA: UARTx STATUS AND CONTROL REGISTER (CONTINUED)

bit 8 **TRMT:** Transmit Shift Register is Empty bit (read-only)
1 = Transmit shift register is empty and transmit buffer is empty (the last transmission has completed)
0 = Transmit shift register is not empty, a transmission is in progress or queued in the transmit buffer

bit 7-6 **URXISEL<1:0>:** Receive Interrupt Mode Selection bit
11 = Reserved; do not use
10 = Interrupt flag bit is asserted while receive buffer is 3/4 or more full (i.e., has 6 or more data characters)
01 = Interrupt flag bit is asserted while receive buffer is 1/2 or more full (i.e., has 4 or more data characters)
00 =Interrupt flag bit is asserted while receive buffer is not empty (i.e., has at least 1 data character)

bit 5 **ADDEN:** Address Character Detect bit (bit 8 of received data = 1)
1 = Address Detect mode is enabled. If 9-bit mode is not selected, this control bit has no effect
0 = Address Detect mode is disabled

bit 4 **RIDLE:** Receiver Idle bit (read-only)
1 = Receiver is Idle
0 = Data is being received

bit 3 **PERR:** Parity Error Status bit (read-only)
1 = Parity error has been detected for the current character
0 = Parity error has not been detected

bit 2 **FERR:** Framing Error Status bit (read-only)
1 = Framing error has been detected for the current character
0 = Framing error has not been detected

bit 1 **OERR:** Receive Buffer Overrun Error Status bit.
This bit is set in hardware and can only be cleared (= 0) in software. Clearing a previously set OERR bit resets the receiver buffer and RSR to empty state.
1 = Receive buffer has overflowed
0 = Receive buffer has not overflowed

bit 0 **URXDA:** Receive Buffer Data Available bit (read-only)
1 = Receive buffer has data, at least one more character can be read
0 = Receive buffer is empty

19.2 Timing Diagrams

Figure 19-2 and Figure 19-3 illustrate typical receive and transmit timing for the UART module.

FIGURE 19-2: UART RECEPTION

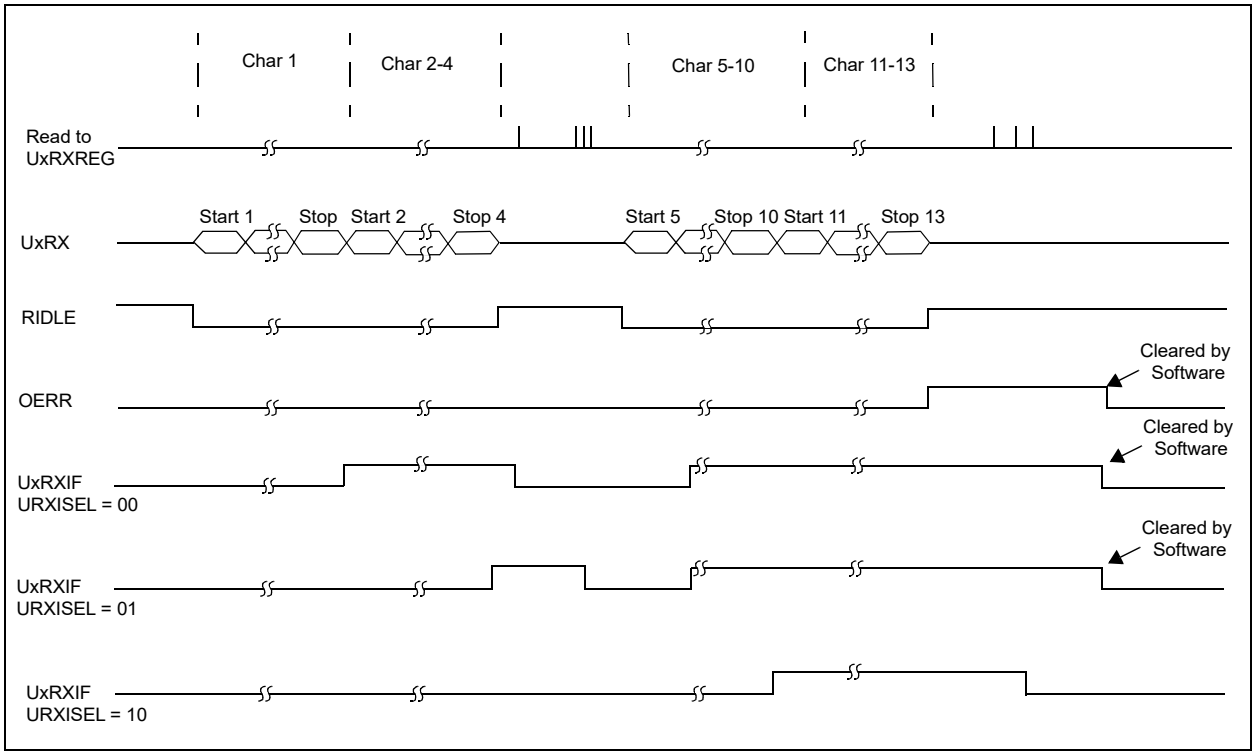

FIGURE 19-3: TRANSMISSION (8-BIT OR 9-BIT DATA)

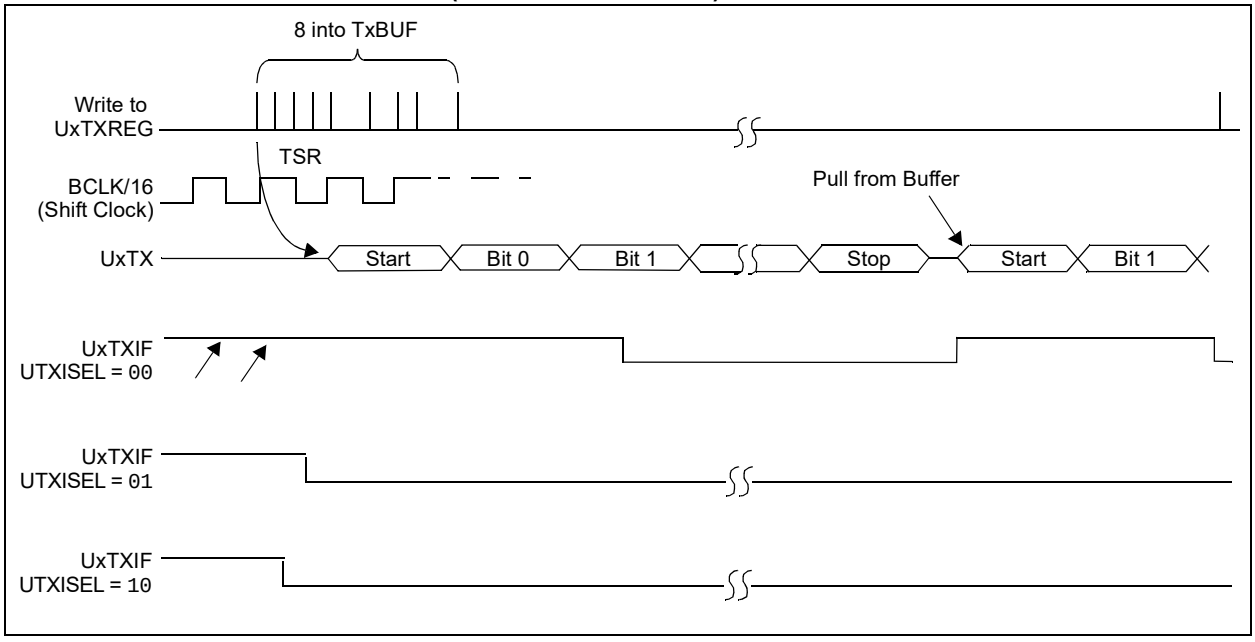

© 2014-2019 Microchip Technology Inc.

20.0 PARALLEL MASTER PORT (PMP)

Note: This data sheet summarizes the features of the PIC32MX1XX/2XX/5XX 64/100-pin family of devices. It is not intended to be a comprehensive reference source. To complement the information in this data sheet, refer to **Section 13. "Parallel Master Port (PMP)"** (DS60001128) in the *"PIC32 Family Reference Manual"*, which is available from the Microchip web site (www.microchip.com/PIC32).

The PMP is a parallel 8-bit or 16-bit input/output module specifically designed to communicate with a wide variety of parallel devices, such as communications peripherals, LCDs, external memory devices and microcontrollers. Because the interface to parallel peripherals varies significantly, the PMP module is highly configurable.

The following are the key features of the PMP module:

- 8-bit,16-bit interface
- Up to 16 programmable address lines
- Up to two Chip Select lines
- Programmable strobe options:
  - Individual read and write strobes, or
  - Read/write strobe with enable strobe
  - Selectable polarity
- Address auto-increment/auto-decrement
- Programmable address/data multiplexing
- Programmable polarity on control signals
- Parallel Slave Port support:
  - Legacy addressable
  - Address support
- Read and Write 4-byte deep auto-incrementing buffer
- Programmable Wait states
- Operate during CPU Sleep and Idle modes
- Fast bit manipulation using CLR, SET and INV registers
- Freeze option for in-circuit debugging

Note: On 64-pin devices, data pins PMD<15:8> are not available in 16-bit Master modes.

FIGURE 20-1: PMP MODULE PINOUT AND CONNECTIONS TO EXTERNAL DEVICES

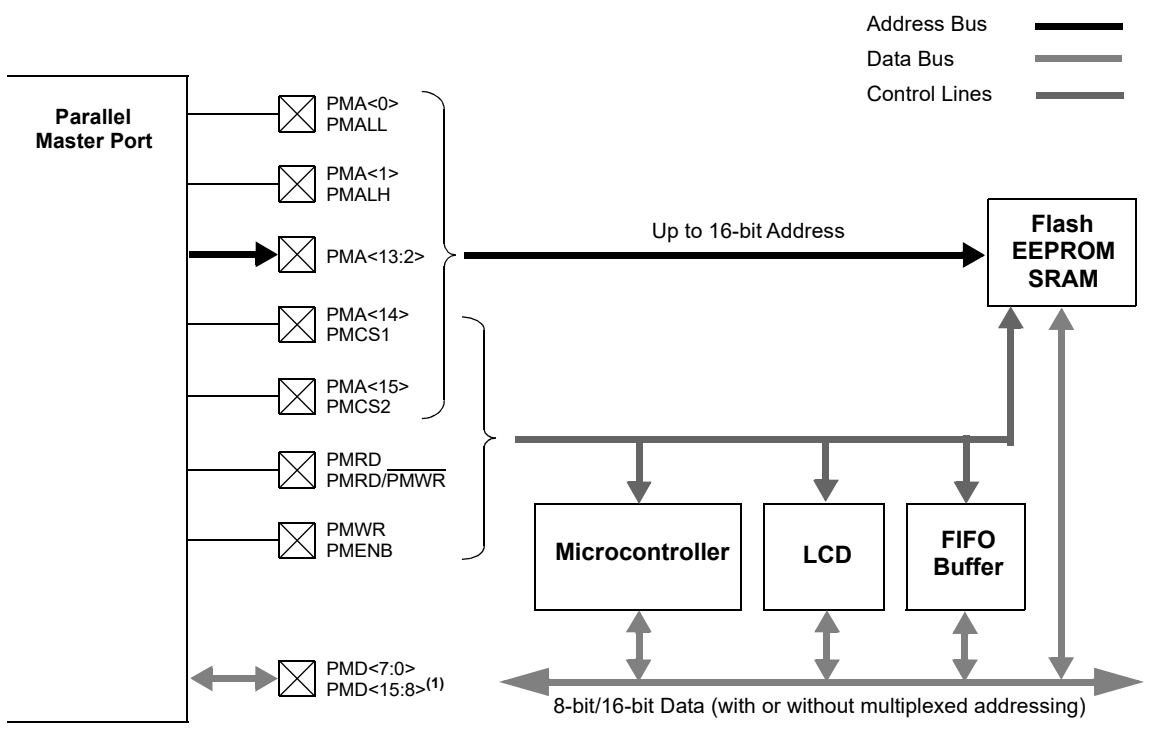

Note: On 64-pin devices, data pins PMD<15:8> are not available in 16-bit Master modes.

20.1 Control Registers

TABLE 20-1: PARALLEL MASTER PORT REGISTER MAP

Virtual Address (BF80_#)	Register Name(1)	Bit Range	Bits 31/15	30/14	29/13	28/12	27/11	26/10	25/9	24/8	23/7	22/6	21/5	20/4	19/3	18/2	17/1	16/0	All Resets
7000	PMCON	31:16	—	—	—	—	—	—	—	—	RDSTART	—	—	—	—	—	DUALBUF	—	0000
		15:0	ON	—	SIDL	ADRMUX<1:0>		PMPTTL	PTWREN	PTRDEN	CSF<1:0>		ALP	CS2P	CS1P	—	WRSP	RDSP	0000
7010	PMMODE	31:16	—	—	—	—	—	—	—	—	—	—	—	—	—	—	—	—	0000
		15:0	BUSY	IRQM<1:0>		INCM<1:0>		MODE16	MODE<1:0>		WAITB<1:0>		WAITM<3:0>				WAITE<1:0>		0000
7020	PMADDR	31:16	—	—	—	—	—	—	—	—	—	—	—	—	—	—	—	—	0000
		15:0	CS2	CS1	ADDR<13:0>														0000
			ADDR15	ADDR14															0000
7030	PMDOUT	31:16	—	—	—	—	—	—	—	—	—	—	—	—	—	—	—	—	0000
		15:0	DATAOUT<15:0>																0000
7040	PMDIN	31:16	—	—	—	—	—	—	—	—	—	—	—	—	—	—	—	—	0000
		15:0	DATAIN<15:0>																0000
7050	PMAEN	31:16	—	—	—	—	—	—	—	—	—	—	—	—	—	—	—	—	0000
		15:0	PTEN<15:0>																0000
7060	PMSTAT	31:16	—	—	—	—	—	—	—	—	—	—	—	—	—	—	—	—	0000
		15:0	IBF	IBOV	—	—	IB3F	IB2F	IB1F	IB0F	OBE	OBUF	—	—	OB3E	OB2E	OB1E	OB0E	BFBF
7070	PMWADDR	31:16	—	—	—	—	—	—	—	—	—	—	—	—	—	—	—	—	0000
		15:0	WCS2	WCS1	—	—	—	—	—	—	—	—	—	—	—	—	—	—	0000
			WADDR15	WADDR14	WADDR<13:0>														0000
7080	PMRADDR	31:16	—	—	—	—	—	—	—	—	—	—	—	—	—	—	—	—	0000
		15:0	RCS2	RCS1	—	—	—	—	—	—	—	—	—	—	—	—	—	—	0000
			RADDR15	RADDR14	RADDR<13:0>														0000
7090	PMRDIN	31:16	31:16	—	—	—	—	—	—	—	—	—	—	—	—	—	—	—	0000
		15:0	15:0	RDATAIN<15:0>															0000

Legend: x = unknown value on Reset; — = unimplemented, read as ‘0’. Reset values are shown in hexadecimal.

Note 1: All registers in this table have corresponding CLR, SET and INV registers at their virtual addresses, plus offsets of 0x4, 0x8 and 0xC, respectively. See **Section 11.2 “CLR, SET, and INV Registers”** for more information.

© 2014-2019 Microchip Technology Inc.

REGISTER 20-1: PMCON: PARALLEL PORT CONTROL REGISTER

Bit Range	Bit 31/23/15/7	Bit 30/22/14/6	Bit 29/21/13/5	Bit 28/20/12/4	Bit 27/19/11/3	Bit 26/18/10/2	Bit 25/17/9/1	Bit 24/16/8/0
31:24	U-0	U-0	U-0	U-0	U-0	U-0	U-0	U-0
	—	—	—	—	—	—	—	—
23:16	R/W-0, HC	U-0	U-0	U-0	U-0	U-0	R/W-0	U-0
	RDSTART	—	—	—	—	—	DUALBUF	—
15:8	R/W-0	U-0	R/W-0	R/W-0	R/W-0	R/W-0	R/W-0	R/W-0
	ON(1)	—	SIDL	ADRMUX<1:0>		PMPTTL	PTWREN	PTRDEN
7:0	R/W-0	R/W-0	R/W-0	R/W-0	R/W-0	U-0	R/W-0	R/W-0
	CSF<1:0>(2)		ALP(2)	CS2P(2)	CS1P(2)	—	WRSP	RDSP

Legend:	HC = Hardware cleared		
R = Readable bit	W = Writable bit	U = Unimplemented bit, read as ‘0’	
-n = Value at POR	‘1’ = Bit is set	‘0’ = Bit is cleared	x = Bit is unknown

bit 31-24 **Unimplemented:** Read as ‘0’

bit 23 **RDSTART:** Start a Read on the PMP Bus bit(3)
- 1 = Start a read cycle on the PMP bus
- 0 = No effect

This bit is cleared by hardware at the end of the read cycle when the BUSY bit (PMMODE<15>) = 0.

bit 22-18 **Unimplemented:** Read as ‘0’

bit 17 **DUALBUF:** Parallel Master Port Dual Read/Write Buffer Enable bit

This bit is only valid in Master mode.
- 1 = PMP uses separate registers for reads and writes
  - Reads: PMRADDR and PMRDIN
  - Writes: PMRWADDR and PMDOUT
- 0 = PMP uses legacy registers for reads and writes
  - Reads/Writes: PMADDR and PMRDIN

bit 16 **Unimplemented:** Read as ‘0’

bit 15 **ON:** Parallel Master Port Enable bit(1)
- 1 = PMP enabled
- 0 = PMP disabled, no off-chip access performed

bit 14 **Unimplemented:** Read as ‘0’

bit 13 **SIDL:** Stop in Idle Mode bit
- 1 = Discontinue module operation when device enters Idle mode
- 0 = Continue module operation in Idle mode

bit 12-11 **ADRMUX<1:0>:** Address/Data Multiplexing Selection bits
- 11 = Lower 8 bits of address are multiplexed on PMD<15:0> pins
- 10 = All 16 bits of address are multiplexed on PMD<7:0> pins
- 01 = Lower 8 bits of address are multiplexed on PMD<7:0> pins, upper bits are on PMA<15:8>
- 00 = Address and data appear on separate pins

bit 10 **PMPTTL:** PMP Module TTL Input Buffer Select bit
- 1 = PMP module uses TTL input buffers
- 0 = PMP module uses Schmitt Trigger input buffer

bit 9 **PTWREN:** Write Enable Strobe Port Enable bit
- 1 = PMWR/PMENB port enabled
- 0 = PMWR/PMENB port disabled

Note 1: When using 1:1 PBCLK divisor, the user software should not read/write the peripheral’s SFRs in the SYSCLK cycle immediately following the instruction that clears the module’s ON control bit.

2: These bits have no effect when their corresponding pins are used as address lines.

REGISTER 20-1: PMCON: PARALLEL PORT CONTROL REGISTER (CONTINUED)

bit 8 **PTRDEN:** Read/Write Strobe Port Enable bit

1 = PMRD/PMWR port enabled
0 = PMRD/PMWR port disabled

bit 7-6 **CSF<1:0>:** Chip Select Function bits(2)

11 = Reserved
10 = PMCS1 and PMCS2 function as Chip Select
01 = PMCS1 functions as address bit 14; PMCS2 functions as Chip Select
00 = PMCS1 and PMCS2 function as address bits 14 and 15, respectively

bit 5 **ALP:** Address Latch Polarity bit(2)

1 = Active-high (PMALL and PMALH)
0 = Active-low ($\overline{\text{PMALL}}$ and $\overline{\text{PMALH}}$)

bit 4 **CS2P:** Chip Select 0 Polarity bit(2)

1 = Active-high (PMCS2)
0 = Active-low ($\overline{\text{PMCS2}}$)

bit 3 **CS1P:** Chip Select 0 Polarity bit(2)

1 = Active-high (PMCS1)
0 = Active-low ($\overline{\text{PMCS1}}$)

bit 2 **Unimplemented:** Read as '0'

bit 1 **WRSP:** Write Strobe Polarity bit

For Slave Modes and Master mode 2 (MODE<1:0> = 00,01,10):

1 = Write strobe active-high (PMWR)
0 = Write strobe active-low ($\overline{\text{PMWR}}$)

For Master mode 1 (MODE<1:0> = 11):

1 = Enable strobe active-high (PMENB)
0 = Enable strobe active-low ($\overline{\text{PMENB}}$)

bit 0 **RDSP:** Read Strobe Polarity bit

For Slave modes and Master mode 2 (MODE<1:0> = 00,01,10):

1 = Read Strobe active-high (PMRD)
0 = Read Strobe active-low ($\overline{\text{PMRD}}$)

For Master mode 1 (MODE<1:0> = 11):

1 = Read/write strobe active-high (PMRD/$\overline{\text{PMWR}}$)
0 = Read/write strobe active-low ($\overline{\text{PMRD}}$/PMWR)

Note 1: When using 1:1 PBCLK divisor, the user software should not read/write the peripheral's SFRs in the SYSCLK cycle immediately following the instruction that clears the module's ON control bit.

2: These bits have no effect when their corresponding pins are used as address lines.

© 2014-2019 Microchip Technology Inc.

REGISTER 20-2: PMMODE: PARALLEL PORT MODE REGISTER

Bit Range	Bit 31/23/15/7	Bit 30/22/14/6	Bit 29/21/13/5	Bit 28/20/12/4	Bit 27/19/11/3	Bit 26/18/10/2	Bit 25/17/9/1	Bit 24/16/8/0
31:24	U-0	U-0	U-0	U-0	U-0	U-0	U-0	U-0
	—	—	—	—	—	—	—	—
23:16	U-0	U-0	U-0	U-0	U-0	U-0	U-0	U-0
	—	—	—	—	—	—	—	—
15:8	R-0	R/W-0	R/W-0	R/W-0	R/W-0	R/W-0	R/W-0	R/W-0
	BUSY	IRQM<1:0>		INCM<1:0>		MODE16	MODE<1:0>	
7:0	R/W-0	R/W-0	R/W-0	R/W-0	R/W-0	R/W-0	R/W-0	R/W-0
	WAITB<1:0>(1)		WAITM<3:0>(1)				WAITE<1:0>(1)	

Legend:			
R = Readable bit	W = Writable bit	U = Unimplemented bit, read as ‘0’	
-n = Value at POR	‘1’ = Bit is set	‘0’ = Bit is cleared	x = Bit is unknown

bit 31-16 **Unimplemented:** Read as ‘0’

bit 15 **BUSY:** Busy bit (Master mode only)
- 1 = Port is busy
- 0 = Port is not busy

bit 14-13 **IRQM<1:0>:** Interrupt Request Mode bits (4)
- 11 = Reserved, do not use
- 10 = Interrupt generated when Read Buffer 3 is read or Write Buffer 3 is written (Buffered PSP mode) or on a read or write operation when PMA<1:0> =11 (Addressable Slave mode only)
- 01 = Interrupt generated at the end of the read/write cycle
- 00 = No Interrupt generated

bit 12-11 **INCM<1:0>:** Increment Mode bits
- 11 = Slave mode read and write buffers auto-increment (MODE<1:0> = 00 only)
- 10 = Decrement ADDR<15:0> by 1 every read/write cycle(2)
- 01 = Increment ADDR<15:0> by 1 every read/write cycle(2)
- 00 = No increment or decrement of address

bit 10 **MODE16:** 8/16-bit Mode bit
- 1 = 16-bit mode: a read or write to the data register invokes a single 16-bit transfer
- 0 = 8-bit mode: a read or write to the data register invokes a single 8-bit transfer

bit 9-8 **MODE<1:0>:** Parallel Port Mode Select bits
- 11 = Master mode 1 (PMCSx, PMRD/PMWR, PMENB, PMA<x:0>, PMD<7:0> and PMD<8:15>(3))
- 10 = Master mode 2 (PMCSx, PMRD, PMWR, PMA<x:0>, PMD<7:0> and PMD<8:15>(3))
- 01 = Enhanced Slave mode, control signals (PMRD, PMWR, PMCS, PMD<7:0> and PMA<1:0>)
- 00 = Legacy Parallel Slave Port, control signals (PMRD, PMWR, PMCS and PMD<7:0>)

bit 7-6 **WAITB<1:0>:** Data Setup to Read/Write Strobe Wait States bits(1)
- 11 = Data wait of 4 TPB; multiplexed address phase of 4 TPB
- 10 = Data wait of 3 TPB; multiplexed address phase of 3 TPB
- 01 = Data wait of 2 TPB; multiplexed address phase of 2 TPB
- 00 = Data wait of 1 TPB; multiplexed address phase of 1 TPB (default)

Note 1: Whenever WAITM<3:0> = 0000, The WAITB and WAITE bits are ignored and forced to 1 TPBCLK cycle for a write operation; WAITB = 1 TPBCLK cycle, WAITE = 0 TPBCLK cycles for a read operation.

2: Address bits, A15 and A14, are not subject to automatic increment or decrement if configured as Chip Select CS2 and CS1.

3: These pins are active when MODE16 = 1 (16-bit mode).

4: These bits only control generating the Parallel Master Port (PMP) interrupt. The Parallel Master Port Error (PMPE) is always generated.

REGISTER 20-2: PMMODE: PARALLEL PORT MODE REGISTER (CONTINUED)

bit 5-2 **WAITM<3:0>:** Data Read/Write Strobe Wait States bits(1)

1111 = Wait of 16 TPB

•

•

•

0001 = Wait of 2 TPB

0000 = Wait of 1 TPB (default)

bit 1-0 **WAITE<1:0>:** Data Hold After Read/Write Strobe Wait States bits(1)

11 = Wait of 4 TPB

10 = Wait of 3 TPB

01 = Wait of 2 TPB

00 = Wait of 1 TPB (default)

For Read operations:

11 = Wait of 3 TPB

10 = Wait of 2 TPB

01 = Wait of 1 TPB

00 = Wait of 0 TPB (default)

Note 1: Whenever WAITM<3:0> = 0000, The WAITB and WAITE bits are ignored and forced to 1 TPBCLK cycle for a write operation; WAITB = 1 TPBCLK cycle, WAITE = 0 TPBCLK cycles for a read operation.

2: Address bits, A15 and A14, are not subject to automatic increment or decrement if configured as Chip Select CS2 and CS1.

3: These pins are active when MODE16 = 1 (16-bit mode).

4: These bits only control generating the Parallel Master Port (PMP) interrupt. The Parallel Master Port Error (PMPE) is always generated.

© 2014-2019 Microchip Technology Inc.

REGISTER 20-3: PMADDR: PARALLEL PORT ADDRESS REGISTER

Bit Range	Bit 31/23/15/7	Bit 30/22/14/6	Bit 29/21/13/5	Bit 28/20/12/4	Bit 27/19/11/3	Bit 26/18/10/2	Bit 25/17/9/1	Bit 24/16/8/0
31:24	U-0	U-0	U-0	U-0	U-0	U-0	U-0	U-0
	—	—	—	—	—	—	—	—
23:16	U-0	U-0	U-0	U-0	U-0	U-0	U-0	U-0
	—	—	—	—	—	—	—	—
15:8	R/W-0	R/W-0	R/W-0	R/W-0	R/W-0	R/W-0	R/W-0	R/W-0
	CS2(1)	CS1(3)	ADDR<13:8>					
	ADDR15(2)	ADDR14(4)						
7:0	R/W-0	R/W-0	R/W-0	R/W-0	R/W-0	R/W-0	R/W-0	R/W-0
	ADDR<7:0>							

Legend:			
R = Readable bit	W = Writable bit	U = Unimplemented bit, read as ‘0’	
-n = Value at POR	‘1’ = Bit is set	‘0’ = Bit is cleared	x = Bit is unknown

bit 31-16 **Unimplemented:** Read as ‘0’

bit 15 **CS2:** Chip Select 2 bit(1)
- 1 = Chip Select 2 is active
- 0 = Chip Select 2 is inactive

bit 15 **ADDR<15>:** Target Address bit 15(2)

bit 14 **CS1:** Chip Select 1 bit(3)
- 1 = Chip Select 1 is active
- 0 = Chip Select 1 is inactive

bit 14 **ADDR<14>:** Target Address bit 14(4)

bit 13-0 **ADDR<13:0>:** Address bits

Note 1: When the CSF<1:0> bits (PMCON<7:6>) = 10 or 01.
2: When the CSF<1:0> bits (PMCON<7:6>) = 00.
3: When the CSF<1:0> bits (PMCON<7:6>) = 10.
4: When the CSF<1:0> bits (PMCON<7:6>) = 00 or 01.

Note: If the DUALBUF bit (PMCON<17>) = 0, the bits in this register control both read and write target addressing. If the DUALBUF bit = 1, the bits in this register are not used. In this instance, use the PMRADDR register for Read operations and the PMWADDR register for Write operations.

REGISTER 20-4: PMDOUT: PARALLEL PORT OUTPUT DATA REGISTER

Bit Range	Bit 31/23/15/7	Bit 30/22/14/6	Bit 29/21/13/5	Bit 28/20/12/4	Bit 27/19/11/3	Bit 26/18/10/2	Bit 25/17/9/1	Bit 24/16/8/0
31:24	U-0	U-0	U-0	U-0	U-0	U-0	U-0	U-0
	—	—	—	—	—	—	—	—
23:16	U-0	U-0	U-0	U-0	U-0	U-0	U-0	U-0
	—	—	—	—	—	—	—	—
15:8	R/W-0	R/W-0	R/W-0	R/W-0	R/W-0	R/W-0	R/W-0	R/W-0
	DATAOUT<15:8>							
7:0	R/W-0	R/W-0	R/W-0	R/W-0	R/W-0	R/W-0	R/W-0	R/W-0
	DATAOUT<7:0>							

Legend:			
R = Readable bit	W = Writable bit	U = Unimplemented bit, read as ‘0’	
-n = Value at POR	‘1’ = Bit is set	‘0’ = Bit is cleared	x = Bit is unknown

bit 31-16 **Unimplemented:** Read as ‘0’

bit 15-0 **DATAOUT<15:0>:** Port Data Output bits

This register is used for Read operations in the Enhanced Parallel Slave mode and Write operations for Dual Buffer Master mode.

In Dual Buffer Master mode, the DUALBUF bit (PMPCON<17>) = 1, a write to the MSB triggers the transaction on the PMP port. When MODE16 = 1, MSB = DATAOUT<15:8>. When MODE16 = 0, MSB = DATAOUT<7:0>.

Note: In Master mode, a read will return the last value written to the register. In Slave mode, a read will return indeterminate results.

REGISTER 20-5: PMDIN: PARALLEL PORT INPUT DATA REGISTER

Bit Range	Bit 31/23/15/7	Bit 30/22/14/6	Bit 29/21/13/5	Bit 28/20/12/4	Bit 27/19/11/3	Bit 26/18/10/2	Bit 25/17/9/1	Bit 24/16/8/0
31:24	U-0	U-0	U-0	U-0	U-0	U-0	U-0	U-0
	—	—	—	—	—	—	—	—
23:16	U-0	U-0	U-0	U-0	U-0	U-0	U-0	U-0
	—	—	—	—	—	—	—	—
15:8	R/W-0	R/W-0	R/W-0	R/W-0	R/W-0	R/W-0	R/W-0	R/W-0
	DATAIN<15:8>							
7:0	R/W-0	R/W-0	R/W-0	R/W-0	R/W-0	R/W-0	R/W-0	R/W-0
	DATAIN<7:0>							

Legend:			
R = Readable bit	W = Writable bit	U = Unimplemented bit, read as ‘0’	
-n = Value at POR	‘1’ = Bit is set	‘0’ = Bit is cleared	x = Bit is unknown

bit 31-16 **Unimplemented:** Read as ‘0’

bit 15-0 **DATAIN<15:0>:** Port Data Input bits

This register is used for both Parallel Master Port mode and Enhanced Parallel Slave mode.

In Parallel Master mode, a write to the MSB triggers the write transaction on the PMP port. Similarly, a read to the MSB triggers the read transaction on the PMP port.

When MODE16 = 1, MSB = DATAIN<15:8>. When MODE16 = 0, MSB = DATAIN<7:0>.

Note: This register is not used in Dual Buffer Master mode (i.e., DUALBUF bit (PMPCON<17>) = 1).

© 2014-2019 Microchip Technology Inc.

REGISTER 20-6: PMAEN: PARALLEL PORT PIN ENABLE REGISTER

Bit Range	Bit 31/23/15/7	Bit 30/22/14/6	Bit 29/21/13/5	Bit 28/20/12/4	Bit 27/19/11/3	Bit 26/18/10/2	Bit 25/17/9/1	Bit 24/16/8/0
31:24	U-0	U-0	U-0	U-0	U-0	U-0	U-0	U-0
	—	—	—	—	—	—	—	—
23:16	U-0	U-0	U-0	U-0	U-0	U-0	U-0	U-0
	—	—	—	—	—	—	—	—
15:8	R/W-0	R/W-0	R/W-0	R/W-0	R/W-0	R/W-0	R/W-0	R/W-0
	PTEN<15:14>(1)		PTEN<13:8>					
7:0	R/W-0	R/W-0	R/W-0	R/W-0	R/W-0	R/W-0	R/W-0	R/W-0
	PTEN<7:2>						PTEN<1:0>(2)	

Legend:			
R = Readable bit	W = Writable bit	U = Unimplemented bit, read as ‘0’	
-n = Value at POR	‘1’ = Bit is set	‘0’ = Bit is cleared	x = Bit is unknown

bit 31-16 **Unimplemented:** Write ‘0’; ignore read

bit 15-14 **PTEN<15:14>:** PMCSx Address Port Enable bits
- 1 = PMA15 and PMA14 function as either PMA<15:14> or PMCS2 and PMCS1(1)
- 0 = PMA15 and PMA14 function as port I/O

bit 13-2 **PTEN<13:2>:** PMP Address Port Enable bits
- 1 = PMA<13:2> function as PMP address lines
- 0 = PMA<13:2> function as port I/O

bit 1-0 **PTEN<1:0>:** PMALH/PMALL Address Port Enable bits
- 1 = PMA1 and PMA0 function as either PMA<1:0> or PMALH and PMALL(2)
- 0 = PMA1 and PMA0 pads function as port I/O

Note 1: The use of these pins as PMA15/PMA14 or CS2/CS1 is selected by the CSF<1:0> bits (PMCON<7:6>).

2: The use of these pins as PMA1/PMA0 or PMALH/PMALL depends on the Address/Data Multiplex mode selected by the ADRMUX<1:0> bits in the PMCON register.

REGISTER 20-7: PMSTAT: PARALLEL PORT STATUS REGISTER (SLAVE MODES ONLY)

Bit Range	Bit 31/23/15/7	Bit 30/22/14/6	Bit 29/21/13/5	Bit 28/20/12/4	Bit 27/19/11/3	Bit 26/18/10/2	Bit 25/17/9/1	Bit 24/16/8/0
31:24	U-0	U-0	U-0	U-0	U-0	U-0	U-0	U-0
	—	—	—	—	—	—	—	—
23:16	U-0	U-0	U-0	U-0	U-0	U-0	U-0	U-0
	—	—	—	—	—	—	—	—
15:8	R-0	R/W-0, HSC	U-0	U-0	R-0	R-0	R-0	R-0
	IBF	IBOV(1)	—	—	IB3F	IB2F	IB1F	IB0F
7:0	R-1	R/W-0, HSC	U-0	U-0	R-1	R-1	R-1	R-1
	OBE	OBUF	—	—	OB3E	OB2E	OB1E	OB0E

Legend:	HSC = Set by Hardware; Cleared by Software		
R = Readable bit	W = Writable bit	U = Unimplemented bit, read as ‘0’	
-n = Value at POR	‘1’ = Bit is set	‘0’ = Bit is cleared	x = Bit is unknown

bit 31-16 **Unimplemented:** Read as ‘0’

bit 15 **IBF:** Input Buffer Full Status bit
- 1 = All writable input buffer registers are full
- 0 = Some or all of the writable input buffer registers are empty

bit 14 **IBOV:** Input Buffer Overflow Status bit (1)
- 1 = A write attempt to a full input byte buffer occurred (must be cleared in software)
- 0 = No overflow occurred

bit 13-12 **Unimplemented:** Read as ‘0’

bit 11-8 **IBxF:** Input Buffer ‘x’ Status Full bits
- 1 = Input Buffer contains data that has not been read (reading buffer will clear this bit)
- 0 = Input Buffer does not contain any unread data

bit 7 **OBE:** Output Buffer Empty Status bit
- 1 = All readable output buffer registers are empty
- 0 = Some or all of the readable output buffer registers are full

bit 6 **OBUF:** Output Buffer Underflow Status bit (1)
- 1 = A read occurred from an empty output byte buffer (must be cleared in software)
- 0 = No underflow occurred

bit 5-4 **Unimplemented:** Read as ‘0’

bit 3-0 **OBxE:** Output Buffer ‘x’ Status Empty bits
- 1 = Output buffer is empty (writing data to the buffer will clear this bit)
- 0 = Output buffer contains data that has not been transmitted

Note 1: This bit will generate a Parallel Master Port Error (PMPE) interrupt.

© 2014-2019 Microchip Technology Inc.

REGISTER 20-8: PMWADDR: PARALLEL PORT WRITE ADDRESS REGISTER

Bit Range	Bit 31/23/15/7	Bit 30/22/14/6	Bit 29/21/13/5	Bit 28/20/12/4	Bit 27/19/11/3	Bit 26/18/10/2	Bit 25/17/9/1	Bit 24/16/8/0
31:24	U-0	U-0	U-0	U-0	U-0	U-0	U-0	U-0
	—	—	—	—	—	—	—	—
23:16	U-0	U-0	U-0	U-0	U-0	U-0	U-0	U-0
	—	—	—	—	—	—	—	—
15:8	R/W-0	R/W-0	R/W-0	R/W-0	R/W-0	R/W-0	R/W-0	R/W-0
	WCS2(1)	WCS1(3)	WADDR<13:8>					
	WADDR15(2)	WADDR14(4)						
7:0	R/W-0	R/W-0	R/W-0	R/W-0	R/W-0	R/W-0	R/W-0	R/W-0
	WADDR<7:0>							

Legend:			
R = Readable bit	W = Writable bit	U = Unimplemented bit, read as ‘0’	
-n = Value at POR	‘1’ = Bit is set	‘0’ = Bit is cleared	x = Bit is unknown

bit 31-16 **Unimplemented:** Read as ‘0’

bit 15 **WCS2:** Chip Select 2 bit(1)
- 1 = Chip Select 2 is active
- 0 = Chip Select 2 is inactive

bit 15 **WADDR<15>:** Target Address bit 15(2)

bit 14 **WCS1:** Chip Select 1 bit(3)
- 1 = Chip Select 1 is active
- 0 = Chip Select 1 is inactive

bit 14 **WADDR<14>:** Target Address bit 14(4)

bit 13-0 **WADDR<13:0>:** Address bits

Note 1: When the CSF<1:0> bits (PMCON<7:6>) = 10 or 01.
2: When the CSF<1:0> bits (PMCON<7:6>) = 00.
3: When the CSF<1:0> bits (PMCON<7:6>) = 10.
4: When the CSF<1:0> bits (PMCON<7:6>) = 00 or 01.

Note: This register is only used when the DUALBUF bit (PMCON<17>) is set to ‘1’.

REGISTER 20-9: PMRADDR: PARALLEL PORT READ ADDRESS REGISTER

Bit Range	Bit 31/23/15/7	Bit 30/22/14/6	Bit 29/21/13/5	Bit 28/20/12/4	Bit 27/19/11/3	Bit 26/18/10/2	Bit 25/17/9/1	Bit 24/16/8/0
31:24	U-0	U-0	U-0	U-0	U-0	U-0	U-0	U-0
	—	—	—	—	—	—	—	—
23:16	U-0	U-0	U-0	U-0	U-0	U-0	U-0	U-0
	—	—	—	—	—	—	—	—
15:8	R/W-0	R/W-0	R/W-0	R/W-0	R/W-0	R/W-0	R/W-0	R/W-0
	RCS2(1)	RCS1(3)	RADDR<13:8>					
	RADDR15(2)	RADDR14(4)						
7:0	R/W-0	R/W-0	R/W-0	R/W-0	R/W-0	R/W-0	R/W-0	R/W-0
	RADDR<7:0>							

Legend:			
R = Readable bit	W = Writable bit	U = Unimplemented bit, read as ‘0’	
-n = Value at POR	‘1’ = Bit is set	‘0’ = Bit is cleared	x = Bit is unknown

bit 31-16 **Unimplemented:** Read as ‘0’

bit 15 **RCS2:** Chip Select 2 bit(1)
- 1 = Chip Select 2 is active
- 0 = Chip Select 2 is inactive (RADDR15 function is selected)

bit 15 **RADDR<15>:** Target Address bit 15(2)

bit 14 **RCS1:** Chip Select 1 bit(3)
- 1 = Chip Select 1 is active
- 0 = Chip Select 1 is inactive (RADDR14 function is selected)

bit 14 **RADDR<14>:** Target Address bit 14(4)

bit 13-0 **RADDR<13:0>:** Address bits

Note 1: When the CSF<1:0> bits (PMCON<7:6>) = 10 or 01.
2: When the CSF<1:0> bits (PMCON<7:6>) = 00.
3: When the CSF<1:0> bits (PMCON<7:6>) = 10.
4: When the CSF<1:0> bits (PMCON<7:6>) = 00 or 01.

Note: This register is only used when the DUALBUF bit (PMCON<17>) is set to ‘1’.

© 2014-2019 Microchip Technology Inc.

REGISTER 20-10: PMRDIN: PARALLEL PORT READ INPUT DATA REGISTER

Bit Range	Bit 31/23/15/7	Bit 30/22/14/6	Bit 29/21/13/5	Bit 28/20/12/4	Bit 27/19/11/3	Bit 26/18/10/2	Bit 25/17/9/1	Bit 24/16/8/0
31:24	U-0	U-0	U-0	U-0	U-0	U-0	U-0	U-0
	—	—	—	—	—	—	—	—
23:16	U-0	U-0	U-0	U-0	U-0	U-0	U-0	U-0
	—	—	—	—	—	—	—	—
15:8	R/W-0	R/W-0	R/W-0	R/W-0	R/W-0	R/W-0	R/W-0	R/W-0
	RDATAIN<15:8>							
7:0	R/W-0	R/W-0	R/W-0	R/W-0	R/W-0	R/W-0	R/W-0	R/W-0
	RDATAIN<7:0>							

Legend:			
R = Readable bit	W = Writable bit	U = Unimplemented bit, read as ‘0’	
-n = Value at POR	‘1’ = Bit is set	‘0’ = Bit is cleared	x = Bit is unknown

bit 31-16 **Unimplemented:** Read as ‘0’

bit 15-0 **RDATAIN<15:0>:** Port Read Input Data bits

Note: This register is only used when the DUALBUF bit (PMCON<17>) is set to ‘1’ and exclusively for reads. If the DUALBUF bit is ‘0’, the PMDIN register (Register 20-5) is used for reads instead of PMRDIN.

NOTES:

© 2014-2019 Microchip Technology Inc.

21.0 REAL-TIME CLOCK AND CALENDAR (RTCC)

Note: This data sheet summarizes the features of the PIC32MX1XX/2XX/5XX 64/100-pin family of devices. It is not intended to be a comprehensive reference source. To complement the information in this data sheet, refer to **Section 29. "Real-Time Clock and Calendar (RTCC)"** (DS60001125) in the *"PIC32 Family Reference Manual"*, which is available from the Microchip web site (www.microchip.com/PIC32).

The PIC32 RTCC module is intended for applications in which accurate time must be maintained for extended periods of time with minimal or no CPU intervention. Low-power optimization provides extended battery lifetime while keeping track of time.

The following are the key features of this module:

- Time: hours, minutes and seconds
- 24-hour format (military time)
- Visibility of one-half second period
- Provides calendar: Weekday, date, month and year
- Alarm intervals are configurable for half of a second, one second, 10 seconds, one minute, 10 minutes, one hour, one day, one week, one month and one year
- Alarm repeat with decrementing counter
- Alarm with indefinite repeat: Chime
- Year range: 2000 to 2099
- Leap year correction
- BCD format for smaller firmware overhead
- Optimized for long-term battery operation
- Fractional second synchronization
- User calibration of the clock crystal frequency with auto-adjust
- Calibration range: ±0.66 seconds error per month
- Calibrates up to 260 ppm of crystal error
- Requirements: External 32.768 kHz clock crystal
- Alarm pulse or seconds clock output on RTCC pin

FIGURE 21-1: RTCC BLOCK DIAGRAM

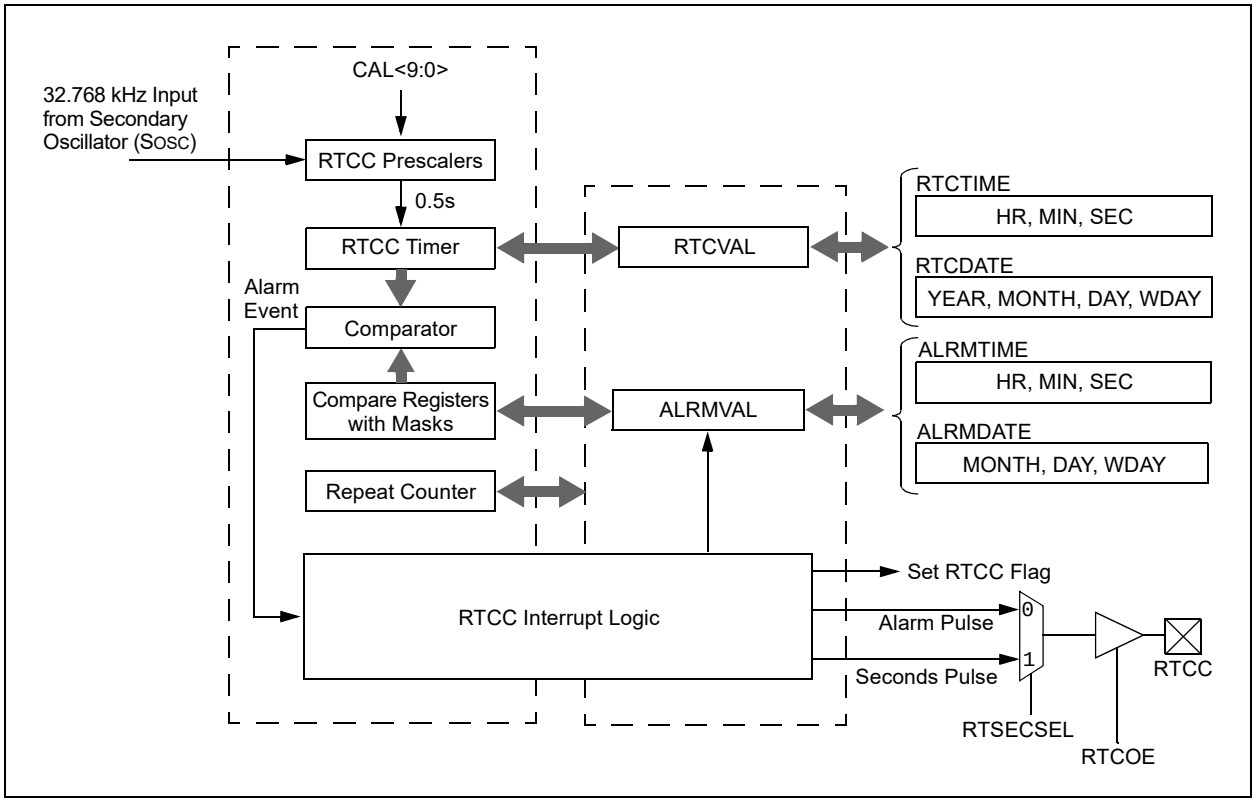

21.1 Control Registers

TABLE 21-1: RTCC REGISTER MAP

Virtual Address (BF80_#)	Register Name(1)	Bit Range	Bits 31/15	30/14	29/13	28/12	27/11	26/10	25/9	24/8	23/7	22/6	21/5	20/4	19/3	18/2	17/1	16/0	All Resets
0200	RTCCON	31:16	—	—	—	—	—	—	CAL<9:0>										0000
		15:0	ON	—	SIDL	—	—	—	—	—	RTSECSEL	RTCCLKON	—	—	RTCWREN	RTCSYNC	HALFSEC	RTCOE	0000
0210	RTCALRM	31:16	—	—	—	—	—	—	—	—	—	—	—	—	—	—	—	—	0000
		15:0	ALRMEN	CHIME	PIV	ALRMSYNC	AMASK<3:0>				ARPT<7:0>								0000
0220	RTCTIME	31:16	HR10<3:0>				HR01<3:0>				MIN10<3:0>				MIN01<3:0>				xxxx
		15:0	SEC10<3:0>				SEC01<3:0>				—	—	—	—	—	—	—	—	xx00
0230	RTCDATE	31:16	YEAR10<3:0>				YEAR01<3:0>				MONTH10<3:0>				MONTH01<3:0>				xxxx
		15:0	DAY10<3:0>				DAY01<3:0>				—	—	—	—	WDAY01<3:0>				xx00
0240	ALRMTIME	31:16	HR10<3:0>				HR01<3:0>				MIN10<3:0>				MIN01<3:0>				xxxx
		15:0	SEC10<3:0>				SEC01<3:0>				—	—	—	—	—	—	—	—	xx00
0250	ALRMDATE	31:16	—	—	—	—	—	—	—	—	MONTH10<3:0>				MONTH01<3:0>				00xx
		15:0	DAY10<3:0>				DAY01<3:0>				—	—	—	—	WDAY01<3:0>				xx0x

Legend: x = unknown value on Reset; — = unimplemented, read as ‘0’. Reset values are shown in hexadecimal.

Note 1: All registers in this table have corresponding CLR, SET and INV registers at its virtual address, plus an offset of 0x4, 0x8 and 0xC, respectively. See **Section 11.2 “CLR, SET, and INV Registers”** for more information.

© 2014-2019 Microchip Technology Inc.

REGISTER 21-1: RTCCON: RTC CONTROL REGISTER

Bit Range	Bit 31/23/15/7	Bit 30/22/14/6	Bit 29/21/13/5	Bit 28/20/12/4	Bit 27/19/11/3	Bit 26/18/10/2	Bit 25/17/9/1	Bit 24/16/8/0
31:24	U-0	U-0	U-0	U-0	U-0	U-0	R/W-0	R/W-0
	—	—	—	—	—	—	CAL<9:8>	
23:16	R/W-0	R/W-0	R/W-0	R/W-0	R/W-0	R/W-0	R/W-0	R/W-0
	CAL<7:0>							
15:8	R/W-0	U-0	R/W-0	U-0	U-0	U-0	U-0	U-0
	ON(1,2)	—	SIDL	—	—	—	—	—
7:0	R/W-0	R-0	U-0	U-0	R/W-0	R-0	R-0	R/W-0
	RTSECSEL(3)	RTCCLKON	—	—	RTCWREN(4)	RTCSYNC	HALFSEC(5)	RTCOE

Legend:			
R = Readable bit	W = Writable bit	U = Unimplemented bit, read as ‘0’	
-n = Value at POR	‘1’ = Bit is set	‘0’ = Bit is cleared	x = Bit is unknown

bit 31-26 **Unimplemented:** Read as ‘0’

bit 25-16 **CAL<9:0>:** RTC Drift Calibration bits, which contain a signed 10-bit integer value
0111111111 = Maximum positive adjustment, adds 511 RTC clock pulses every one minute
•
•
•
0000000001 = Minimum positive adjustment, adds 1 RTC clock pulse every one minute
0000000000 = No adjustment
1111111111 = Minimum negative adjustment, subtracts 1 RTC clock pulse every one minute
•
•
•
1000000000 = Maximum negative adjustment, subtracts 512 clock pulses every one minute

bit 15 **ON:** RTCC On bit(1,2)
1 = RTCC module is enabled
0 = RTCC module is disabled

bit 14 **Unimplemented:** Read as ‘0’

bit 13 **SIDL:** Stop in Idle Mode bit
1 = Disables the PBCLK to the RTCC when CPU enters in Idle mode
0 = Continue normal operation in Idle mode

bit 12-8 **Unimplemented:** Read as ‘0’

bit 7 **RTSECSEL:** RTCC Seconds Clock Output Select bit(3)
1 = RTCC Seconds Clock is selected for the RTCC pin
0 = RTCC Alarm Pulse is selected for the RTCC pin

bit 6 **RTCCLKON:** RTCC Clock Enable Status bit
1 = RTCC Clock is actively running
0 = RTCC Clock is not running

bit 5-4 **Unimplemented:** Read as ‘0’

Note 1: The ON bit is only writable when RTCWREN = 1.
2: When using the 1:1 PBCLK divisor, the user software should not read/write the peripheral’s SFRs in the SYSCLK cycle immediately following the instruction that clears the module’s ON bit.
3: Requires RTCOE = 1 (RTCCON<0>) for the output to be active.
4: The RTCWREN bit can be set only when the write sequence is enabled.
5: This bit is read-only. It is cleared to ‘0’ on a write to the seconds bit fields (RTCTIME<14:8>).

Note: This register is reset only on a Power-on Reset (POR).

REGISTER 21-1: RTCCON: RTC CONTROL REGISTER (CONTINUED)

bit 3 **RTCWREN:** RTC Value Registers Write Enable bit(4)
- 1 = RTC Value registers can be written to by the user
- 0 = RTC Value registers are locked out from being written to by the user

bit 2 **RTCSYNC:** RTCC Value Registers Read Synchronization bit
- 1 = RTC Value registers can change while reading, due to a rollover ripple that results in an invalid data read If the register is read twice and results in the same data, the data can be assumed to be valid
- 0 = RTC Value registers can be read without concern about a rollover ripple

bit 1 **HALFSEC:** Half-Second Status bit(5)
- 1 = Second half period of a second
- 0 = First half period of a second

bit 0 **RTCOE:** RTCC Output Enable bit
- 1 = RTCC clock output enabled – clock presented onto an I/O
- 0 = RTCC clock output disabled

Note 1: The ON bit is only writable when RTCWREN = 1.

2: When using the 1:1 PBCLK divisor, the user software should not read/write the peripheral's SFRs in the SYSCLK cycle immediately following the instruction that clears the module's ON bit.

3: Requires RTCOE = 1 (RTCCON<0>) for the output to be active.

4: The RTCWREN bit can be set only when the write sequence is enabled.

5: This bit is read-only. It is cleared to '0' on a write to the seconds bit fields (RTCTIME<14:8>).

Note: This register is reset only on a Power-on Reset (POR).

© 2014-2019 Microchip Technology Inc.

REGISTER 21-2: RTCALRM: RTC ALARM CONTROL REGISTER

Bit Range	Bit 31/23/15/7	Bit 30/22/14/6	Bit 29/21/13/5	Bit 28/20/12/4	Bit 27/19/11/3	Bit 26/18/10/2	Bit 25/17/9/1	Bit 24/16/8/0
31:24	U-0	U-0	U-0	U-0	U-0	U-0	U-0	U-0
	—	—	—	—	—	—	—	—
23:16	U-0	U-0	U-0	U-0	U-0	U-0	U-0	U-0
	—	—	—	—	—	—	—	—
15:8	R/W-0	R/W-0	R/W-0	R-0	R/W-0	R/W-0	R/W-0	R/W-0
	ALRMEN(1,2)	CHIME(2)	PIV(2)	ALRMSYNC(3)	AMASK<3:0>(3)			
7:0	R/W-0	R/W-0	R/W-0	R/W-0	R/W-0	R/W-0	R/W-0	R/W-0
	ARPT<7:0>(3)							

Legend:			
R = Readable bit	W = Writable bit	U = Unimplemented bit, read as ‘0’	
-n = Value at POR	‘1’ = Bit is set	‘0’ = Bit is cleared	x = Bit is unknown

bit 31-16 **Unimplemented:** Read as ‘0’

bit 15 **ALRMEN:** Alarm Enable bit(1,2)
- 1 = Alarm is enabled
- 0 = Alarm is disabled

bit 14 **CHIME:** Chime Enable bit(2)
- 1 = Chime is enabled – ARPT<7:0> is allowed to rollover from 0x00 to 0xFF
- 0 = Chime is disabled – ARPT<7:0> stops once it reaches 0x00

bit 13 **PIV:** Alarm Pulse Initial Value bit(2)

When ALRMEN = 0, PIV is writable and determines the initial value of the Alarm Pulse.
When ALRMEN = 1, PIV is read-only and returns the state of the Alarm Pulse.

bit 12 **ALRMSYNC:** Alarm Sync bit(3)
- 1 = ARPT<7:0> and ALRMEN may change as a result of a half second rollover during a read. The ARPT must be read repeatedly until the same value is read twice. This must be done since multiple bits may be changing, which are then synchronized to the PB clock domain
- 0 = ARPT<7:0> and ALRMEN can be read without concerns of rollover because the prescaler is > 32 RTC clocks away from a half-second rollover

bit 11-8 **AMASK<3:0>:** Alarm Mask Configuration bits(3)
- 0000 = Every half-second
- 0001 = Every second
- 0010 = Every 10 seconds
- 0011 = Every minute
- 0100 = Every 10 minutes
- 0101 = Every hour
- 0110 = Once a day
- 0111 = Once a week
- 1000 = Once a month
- 1001 = Once a year (except when configured for February 29, once every four years)
- 1010 = Reserved; do not use
- 1011 = Reserved; do not use
- 11xx = Reserved; do not use

Note 1: Hardware clears the ALRMEN bit anytime the alarm event occurs, when ARPT<7:0> = 00 and CHIME = 0.

2: This field should not be written when the RTCC ON bit = ‘1’ (RTCCON<15>) and ALRMSYNC = 1.

3: This assumes a CPU read will execute in less than 32 PBCLKs.

Note: This register is reset only on a Power-on Reset (POR).

REGISTER 21-2: RTCALRM: RTC ALARM CONTROL REGISTER (CONTINUED)

bit 7-0 **ARPT<7:0>:** Alarm Repeat Counter Value bits(3)

`11111111` =Alarm will trigger 256 times

.

.

.

`00000000` =Alarm will trigger one time

The counter decrements on any alarm event. The counter only rolls over from 0x00 to 0xFF if CHIME = `1`.

Note 1: Hardware clears the ALRMEN bit anytime the alarm event occurs, when ARPT<7:0> = `00` and CHIME = `0`.

2: This field should not be written when the RTCC ON bit = ‘1’ (RTCCON<15>) and ALRMSYNC = `1`.

3: This assumes a CPU read will execute in less than 32 PBCLKs.

Note: This register is reset only on a Power-on Reset (POR).

© 2014-2019 Microchip Technology Inc.

REGISTER 21-3: RTCTIME: RTC TIME VALUE REGISTER

Bit Range	Bit 31/23/15/7	Bit 30/22/14/6	Bit 29/21/13/5	Bit 28/20/12/4	Bit 27/19/11/3	Bit 26/18/10/2	Bit 25/17/9/1	Bit 24/16/8/0
31:24	R/W-x	R/W-x	R/W-x	R/W-x	R/W-x	R/W-x	R/W-x	R/W-x
	HR10<3:0>				HR01<3:0>			
23:16	R/W-x	R/W-x	R/W-x	R/W-x	R/W-x	R/W-x	R/W-x	R/W-x
	MIN10<3:0>				MIN01<3:0>			
15:8	R/W-x	R/W-x	R/W-x	R/W-x	R/W-x	R/W-x	R/W-x	R/W-x
	SEC10<3:0>				SEC01<3:0>			
7:0	U-0	U-0	U-0	U-0	U-0	U-0	U-0	U-0
	—	—	—	—	—	—	—	—

Legend:

R = Readable bit	W = Writable bit	U = Unimplemented bit, read as ‘0’	
-n = Value at POR	‘1’ = Bit is set	‘0’ = Bit is cleared	x = Bit is unknown

bit 31-28 **HR10<3:0>:** Binary-Coded Decimal Value of Hours bits, 10s place digits; contains a value from 0 to 2

bit 27-24 **HR01<3:0>:** Binary-Coded Decimal Value of Hours bits, 1s place digit; contains a value from 0 to 9

bit 23-20 **MIN10<3:0>:** Binary-Coded Decimal Value of Minutes bits, 10s place digits; contains a value from 0 to 5

bit 19-16 **MIN01<3:0>:** Binary-Coded Decimal Value of Minutes bits, 1s place digit; contains a value from 0 to 9

bit 15-12 **SEC10<3:0>:** Binary-Coded Decimal Value of Seconds bits, 10s place digits; contains a value from 0 to 5

bit 11-8 **SEC01<3:0>:** Binary-Coded Decimal Value of Seconds bits, 1s place digit; contains a value from 0 to 9

bit 7-0 **Unimplemented:** Read as ‘0’

Note: This register is only writable when RTCWREN = 1 (RTCCON<3>).

REGISTER 21-4: RTCDATE: RTC DATE VALUE REGISTER

Bit Range	Bit 31/23/15/7	Bit 30/22/14/6	Bit 29/21/13/5	Bit 28/20/12/4	Bit 27/19/11/3	Bit 26/18/10/2	Bit 25/17/9/1	Bit 24/16/8/0
31:24	R/W-x	R/W-x	R/W-x	R/W-x	R/W-x	R/W-x	R/W-x	R/W-x
	YEAR10<3:0>				YEAR01<3:0>			
23:16	R/W-x	R/W-x	R/W-x	R/W-x	R/W-x	R/W-x	R/W-x	R/W-x
	MONTH10<3:0>				MONTH01<3:0>			
15:8	R/W-x	R/W-x	R/W-x	R/W-x	R/W-x	R/W-x	R/W-x	R/W-x
	DAY10<3:0>				DAY01<3:0>			
7:0	U-0	U-0	U-0	U-0	R/W-x	R/W-x	R/W-x	R/W-x
	—	—	—	—	WDAY01<3:0>			

Legend:			
R = Readable bit	W = Writable bit	U = Unimplemented bit, read as ‘0’	
-n = Value at POR	‘1’ = Bit is set	‘0’ = Bit is cleared	x = Bit is unknown

bit 31-28 **YEAR10<3:0>:** Binary-Coded Decimal Value of Years bits, 10s place digits

bit 27-24 **YEAR01<3:0>:** Binary-Coded Decimal Value of Years bits, 1s place digit

bit 23-20 **MONTH10<3:0>:** Binary-Coded Decimal Value of Months bits, 10s place digits; contains a value of 0 or 1

bit 19-16 **MONTH01<3:0>:** Binary-Coded Decimal Value of Months bits, 1s place digit; contains a value from 0 to 9

bit 15-12 **DAY10<3:0>:** Binary-Coded Decimal Value of Days bits, 10s place digits; contains a value from 0 to 3

bit 11-8 **DAY01<3:0>:** Binary-Coded Decimal Value of Days bits, 1s place digit; contains a value from 0 to 9

bit 7-4 **Unimplemented:** Read as ‘0’

bit 3-0 **WDAY01<3:0>:** Binary-Coded Decimal Value of Weekdays bits,1s place digit; contains a value from 0 to 6

Note: This register is only writable when RTCWREN = 1 (RTCCON<3>).

© 2014-2019 Microchip Technology Inc.

REGISTER 21-5: ALRMTIME: ALARM TIME VALUE REGISTER

Bit Range	Bit 31/23/15/7	Bit 30/22/14/6	Bit 29/21/13/5	Bit 28/20/12/4	Bit 27/19/11/3	Bit 26/18/10/2	Bit 25/17/9/1	Bit 24/16/8/0
31:24	R/W-x	R/W-x	R/W-x	R/W-x	R/W-x	R/W-x	R/W-x	R/W-x
	HR10<3:0>				HR01<3:0>			
23:16	R/W-x	R/W-x	R/W-x	R/W-x	R/W-x	R/W-x	R/W-x	R/W-x
	MIN10<3:0>				MIN01<3:0>			
15:8	R/W-x	R/W-x	R/W-x	R/W-x	R/W-x	R/W-x	R/W-x	R/W-x
	SEC10<3:0>				SEC01<3:0>			
7:0	U-0	U-0	U-0	U-0	U-0	U-0	U-0	U-0
	—	—	—	—	—	—	—	—

Legend:			
R = Readable bit	W = Writable bit	U = Unimplemented bit, read as ‘0’	
-n = Value at POR	‘1’ = Bit is set	‘0’ = Bit is cleared	x = Bit is unknown

bit 31-28 **HR10<3:0>:** Binary Coded Decimal value of hours bits, 10s place digits; contains a value from 0 to 2

bit 27-24 **HR01<3:0>:** Binary Coded Decimal value of hours bits, 1s place digit; contains a value from 0 to 9

bit 23-20 **MIN10<3:0>:** Binary Coded Decimal value of minutes bits, 10s place digits; contains a value from 0 to 5

bit 19-16 **MIN01<3:0>:** Binary Coded Decimal value of minutes bits, 1s place digit; contains a value from 0 to 9

bit 15-12 **SEC10<3:0>:** Binary Coded Decimal value of seconds bits, 10s place digits; contains a value from 0 to 5

bit 11-8 **SEC01<3:0>:** Binary Coded Decimal value of seconds bits, 1s place digit; contains a value from 0 to 9

bit 7-0 **Unimplemented:** Read as ‘0’

REGISTER 21-6: ALRMDATE: ALARM DATE VALUE REGISTER

Bit Range	Bit 31/23/15/7	Bit 30/22/14/6	Bit 29/21/13/5	Bit 28/20/12/4	Bit 27/19/11/3	Bit 26/18/10/2	Bit 25/17/9/1	Bit 24/16/8/0
31:24	U-0	U-0	U-0	U-0	U-0	U-0	U-0	U-0
	—	—	—	—	—	—	—	—
23:16	R/W-x	R/W-x	R/W-x	R/W-x	R/W-x	R/W-x	R/W-x	R/W-x
	MONTH10<3:0>				MONTH01<3:0>			
15:8	R/W-x	R/W-x	R/W-x	R/W-x	R/W-x	R/W-x	R/W-x	R/W-x
	DAY10<1:0>				DAY01<3:0>			
7:0	U-0	U-0	U-0	U-0	R/W-x	R/W-x	R/W-x	R/W-x
	—	—	—	—	WDAY01<3:0>			

Legend:			
R = Readable bit	W = Writable bit	U = Unimplemented bit, read as ‘0’	
-n = Value at POR	‘1’ = Bit is set	‘0’ = Bit is cleared	x = Bit is unknown

bit 31-24 **Unimplemented:** Read as ‘0’

bit 23-20 **MONTH10<3:0>:** Binary Coded Decimal value of months bits, 10s place digits; contains a value of 0 or 1

bit 19-16 **MONTH01<3:0>:** Binary Coded Decimal value of months bits, 1s place digit; contains a value from 0 to 9

bit 15-12 **DAY10<3:0>:** Binary Coded Decimal value of days bits, 10s place digits; contains a value from 0 to 3

bit 11-8 **DAY01<3:0>:** Binary Coded Decimal value of days bits, 1s place digit; contains a value from 0 to 9

bit 7-4 **Unimplemented:** Read as ‘0’

bit 3-0 **WDAY01<3:0>:** Binary Coded Decimal value of weekdays bits, 1s place digit; contains a value from 0 to 6

© 2014-2019 Microchip Technology Inc.

22.0 10-BIT ANALOG-TO-DIGITAL CONVERTER (ADC)

Note: This data sheet summarizes the features of the PIC32MX1XX/2XX/5XX 64/100-pin family of devices. It is not intended to be a comprehensive reference source. To complement the information in this data sheet, refer to **Section 17. "10-bit Analog-to-Digital Converter (ADC)"** (DS60001104) in the *"PIC32 Family Reference Manual"*, which is available from the Microchip web site (www.microchip.com/PIC32).

The 10-bit Analog-to-Digital Converter (ADC) includes the following features:

- Successive Approximation Register (SAR) conversion
- Up to 1 Msps conversion speed
- Up to 48 analog input pins
- External voltage reference input pins
- One unipolar, differential Sample and Hold Amplifier (SHA)
- Automatic Channel Scan mode
- Selectable conversion trigger source
- 16-word conversion result buffer
- Selectable buffer fill modes
- Eight conversion result format options
- Operation during CPU Sleep and Idle modes

A block diagram of the 10-bit ADC is illustrated in Figure 22-1. The 10-bit ADC has up to 28 analog input pins, designated AN0-AN27. In addition, there are two analog input pins for external voltage reference connections. These voltage reference inputs may be shared with other analog input pins and may be common to other analog module references.

FIGURE 22-1: ADC1 MODULE BLOCK DIAGRAM

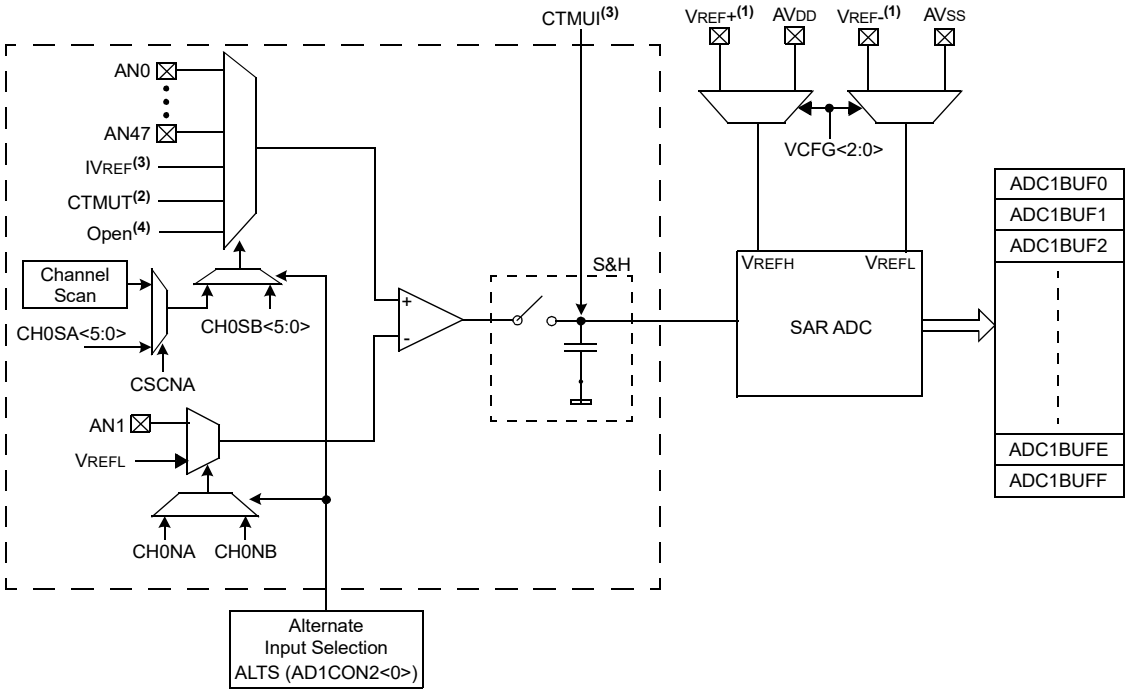

Note 1: VREF+ and VREF- inputs can be multiplexed with other analog inputs.

2: Connected to the CTMU temperature reference diode. See **Section 26.0 "Charge Time Measurement Unit (CTMU)"** for more information.

3: Internal precision 1.2V reference. See **Section 24.0 "Comparator"** for more information.

4: This selection is only used with CTMU capacitive and time measurement.

FIGURE 22-2: ADC CONVERSION CLOCK PERIOD BLOCK DIAGRAM

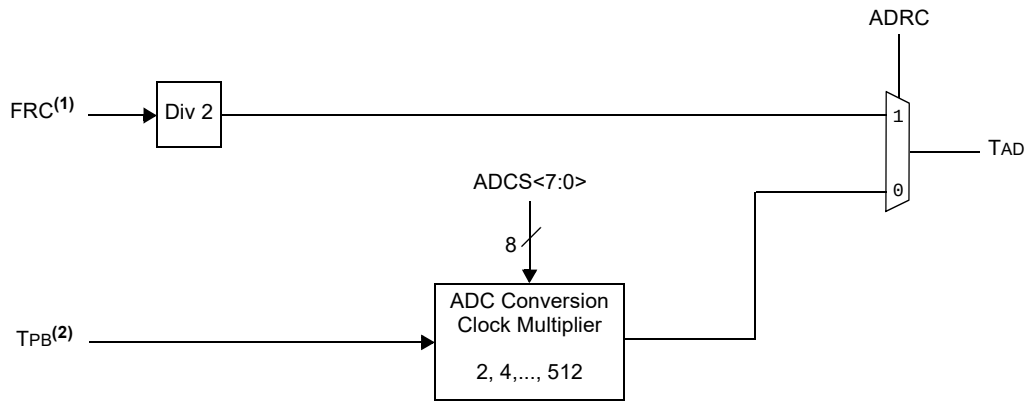

Note 1: See **Section 31.0 "40 MHz Electrical Characteristics"** for the exact FRC clock value.

2: Refer to Figure 8-1 in **Section 8.0 "Oscillator Configuration"** for more information.

© 2014-2019 Microchip Technology Inc.

22.1 Control Registers

TABLE 22-1: ADC REGISTER MAP

Virtual Address (BF80_#)	Register Name	Bit Range	Bits 31/15	30/14	29/13	28/12	27/11	26/10	25/9	24/8	23/7	22/6	21/5	20/4	19/3	18/2	17/1	16/0	All Resets
9000	AD1CON1(1)	31:16	—	—	—	—	—	—	—	—	—	—	—	—	—	—	—	—	0000
		15:0	ON	—	SIDL	—	—	FORM<2:0>			SSRC<2:0>			CLRASAM	—	ASAM	SAMP	DONE	0000
9010	AD1CON2(1)	31:16	—	—	—	—	—	—	—	—	—	—	—	—	—	—	—	—	0000
		15:0	VCFG<2:0>			OFFCAL	—	CSCNA	—	—	BUFS	—	SMPI<3:0>				BUFM	ALTS	0000
9020	AD1CON3(1)	31:16	—	—	—	—	—	—	—	—	—	—	—	—	—	—	—	—	0000
		15:0	ADRC	—	—	SAMC<4:0>					ADCS<7:0>								0000
9040	AD1CHS(1)	31:16	CH0NB	—	CH0SB<5:0>(2)						CH0NA	—	CH0SA<5:0>(2)						0000
		15:0	—	—	—	—	—	—	—	—	—	—	—	—	—	—	—	—	0000
9050	AD1CSSL(1,3)	31:16	CSSL31	CSSL30	CSSL29	CSSL28	CSSL27	CSSL26	CSSL25	CSSL24	CSSL23	CSSL22	CSSL21	CSSL20	CSSL19	CSSL18	CSSL17	CSSL16	0000
		15:0	CSSL15	CSSL14	CSSL13	CSSL12	CSSL11	CSSL10	CSSL9	CSSL8	CSSL7	CSSL6	CSSL5	CSSL4	CSSL3	CSSL2	CSSL1	CSSL0	0000
9060	AD1CSSL2(1)	31:16	—	—	—	—	—	—	—	—	—	—	—	—	—	CSSL50	CSSL49	CSSL48	0000
		15:0	CSSL47	CSSL46	CSSL45	CSSL44	CSSL43	CSSL42	CSSL41	CSSL40	CSSL39	CSSL38	CSSL37	CSSL36	CSSL35	CSSL34	CSSL33	CSSL32	0000
9070	ADC1BUF0	31:16	ADC Result Word 0 (ADC1BUF0<31:0>)																0000
		15:0																	0000
9080	ADC1BUF1	31:16	ADC Result Word 1 (ADC1BUF1<31:0>)																0000
		15:0																	0000
9090	ADC1BUF2	31:16	ADC Result Word 2 (ADC1BUF2<31:0>)																0000
		15:0																	0000
90A0	ADC1BUF3	31:16	ADC Result Word 3 (ADC1BUF3<31:0>)																0000
		15:0																	0000
90B0	ADC1BUF4	31:16	ADC Result Word 4 (ADC1BUF4<31:0>)																0000
		15:0																	0000
90C0	ADC1BUF5	31:16	ADC Result Word 5 (ADC1BUF5<31:0>)																0000
		15:0																	0000
90D0	ADC1BUF6	31:16	ADC Result Word 6 (ADC1BUF6<31:0>)																0000
		15:0																	0000
90E0	ADC1BUF7	31:16	ADC Result Word 7 (ADC1BUF7<31:0>)																0000
		15:0																	0000
90F0	ADC1BUF8	31:16	ADC Result Word 8 (ADC1BUF8<31:0>)																0000
		15:0																	0000

Legend: x = unknown value on Reset; — = unimplemented, read as '0'. Reset values are shown in hexadecimal.

Note 1: This register has corresponding CLR, SET and INV registers at their virtual addresses, plus offsets of 0x4, 0x8 and 0xC, respectively. See **Section 11.2 "CLR, SET, and INV Registers"** for details.

2: For 64-pin devices, the MSB of these bits is not available.

3: For 64-pin devices, only the CSSL30:CSSL0 bits are available.

© 2014-2019 Microchip Technology Inc.

TABLE 22-1: ADC REGISTER MAP (CONTINUED)

Virtual Address (BF80_#)	Register Name	Bit Range	Bits																All Resets
			31/15	30/14	29/13	28/12	27/11	26/10	25/9	24/8	23/7	22/6	21/5	20/4	19/3	18/2	17/1	16/0	
9100	ADC1BUF9	31:16	ADC Result Word 9 (ADC1BUF9<31:0>)																0000
		15:0																	0000
9110	ADC1BUFA	31:16	ADC Result Word A (ADC1BUFA<31:0>)																0000
		15:0																	0000
9120	ADC1BUFB	31:16	ADC Result Word B (ADC1BUFB<31:0>)																0000
		15:0																	0000
9130	ADC1BUFC	31:16	ADC Result Word C (ADC1BUFC<31:0>)																0000
		15:0																	0000
9140	ADC1BUFD	31:16	ADC Result Word D (ADC1BUFD<31:0>)																0000
		15:0																	0000
9150	ADC1BUFE	31:16	ADC Result Word E (ADC1BUFE<31:0>)																0000
		15:0																	0000
9160	ADC1BUFF	31:16	ADC Result Word F (ADC1BUFF<31:0>)																0000
		15:0																	0000

Legend: x = unknown value on Reset; — = unimplemented, read as '0'. Reset values are shown in hexadecimal.

Note 1: This register has corresponding CLR, SET and INV registers at their virtual addresses, plus offsets of 0x4, 0x8 and 0xC, respectively. See **Section 11.2 "CLR, SET, and INV Registers"** for details.

2: For 64-pin devices, the MSB of these bits is not available.

3: For 64-pin devices, only the CSSL30:CSSL0 bits are available.

© 2014-2019 Microchip Technology Inc.

REGISTER 22-1: AD1CON1: ADC CONTROL REGISTER 1

Bit Range	Bit 31/23/15/7	Bit 30/22/14/6	Bit 29/21/13/5	Bit 28/20/12/4	Bit 27/19/11/3	Bit 26/18/10/2	Bit 25/17/9/1	Bit 24/16/8/0
31:24	U-0	U-0	U-0	U-0	U-0	U-0	U-0	U-0
	—	—	—	—	—	—	—	—
23:16	U-0	U-0	U-0	U-0	U-0	U-0	U-0	U-0
	—	—	—	—	—	—	—	—
15:8	R/W-0	U-0	R/W-0	U-0	U-0	R/W-0	R/W-0	R/W-0
	ON(1)	—	SIDL	—	—	FORM<2:0>		
7:0	R/W-0	R/W-0	R/W-0	R/W-0	U-0	R/W-0	R/W-0, HSC	R/C-0, HSC
	SSRC<2:0>			CLRASAM	—	ASAM	SAMP(2)	DONE(3)

Legend:			
R = Readable bit	W = Writable bit	U = Unimplemented bit, read as ‘0’	
-n = Value at POR	‘1’ = Bit is set	‘0’ = Bit is cleared	x = Bit is unknown

bit 31-16 **Unimplemented:** Read as ‘0’

bit 15 **ON:** ADC Operating Mode bit(1)
- 1 = ADC module is operating
- 0 = ADC module is not operating

bit 14 **Unimplemented:** Read as ‘0’

bit 13 **SIDL:** Stop in Idle Mode bit
- 1 = Discontinue module operation when device enters Idle mode
- 0 = Continue module operation in Idle mode

bit 12-11 **Unimplemented:** Read as ‘0’

bit 10-8 **FORM<2:0>:** Data Output Format bits
- 011 = Signed Fractional 16-bit (DOUT = 0000 0000 0000 0000 sddd dddd dd00 0000)
- 010 = Fractional 16-bit (DOUT = 0000 0000 0000 0000 dddd dddd dd00 0000)
- 001 = Signed Integer 16-bit (DOUT = 0000 0000 0000 0000 ssss sssd dddd dddd)
- 000 = Integer 16-bit (DOUT = 0000 0000 0000 0000 0000 00dd dddd dddd)
- 111 = Signed Fractional 32-bit (DOUT = sddd dddd dd00 0000 0000 0000 0000)
- 110 = Fractional 32-bit (DOUT = dddd dddd dd00 0000 0000 0000 0000 0000)
- 101 = Signed Integer 32-bit (DOUT = ssss ssss ssss ssss ssss sssd dddd dddd)
- 100 = Integer 32-bit (DOUT = 0000 0000 0000 0000 0000 00dd dddd dddd)

bit 7-5 **SSRC<2:0>:** Conversion Trigger Source Select bits
- 111 = Internal counter ends sampling and starts conversion (auto convert)
- 110 = Reserved
- 101 = Reserved
- 100 = Reserved
- 011 = CTMU ends sampling and starts conversion
- 010 = Timer 3 period match ends sampling and starts conversion
- 001 = Active transition on INT0 pin ends sampling and starts conversion
- 000 = Clearing SAMP bit ends sampling and starts conversion

Note 1: When using 1:1 PBCLK divisor, the user software should not read/write the peripheral’s SFRs in the SYSCLK cycle immediately following the instruction that clears the module’s ON bit.

2: If ASAM = 0, software can write a ‘1’ to start sampling. This bit is automatically set by hardware if ASAM = 1. If SSRC = 0, software can write a ‘0’ to end sampling and start conversion. If SSRC ≠ 0, this bit is automatically cleared by hardware to end sampling and start conversion.

3: This bit is automatically set by hardware when analog-to-digital conversion is complete. Software can write a ‘0’ to clear this bit (a write of ‘1’ is not allowed). Clearing this bit does not affect any operation already in progress. This bit is automatically cleared by hardware at the start of a new conversion.

REGISTER 22-1: AD1CON1: ADC CONTROL REGISTER 1 (CONTINUED)

bit 4 **CLRASAM:** Stop Conversion Sequence bit (when the first ADC interrupt is generated)
- 1 = Stop conversions when the first ADC interrupt is generated. Hardware clears the ASAM bit when the ADC interrupt is generated.
- 0 = Normal operation, buffer contents will be overwritten by the next conversion sequence

bit 3 **Unimplemented:** Read as '0'

bit 2 **ASAM:** ADC Sample Auto-Start bit
- 1 = Sampling begins immediately after last conversion completes; SAMP bit is automatically set.
- 0 = Sampling begins when SAMP bit is set

bit 1 **SAMP:** ADC Sample Enable bit(2)
- 1 = The ADC sample and hold amplifier is sampling
- 0 = The ADC sample/hold amplifier is holding

When ASAM = 0, writing '1' to this bit starts sampling.
When SSRC = 000, writing '0' to this bit will end sampling and start conversion.

bit 0 **DONE:** Analog-to-Digital Conversion Status bit(3)
- 1 = Analog-to-digital conversion is done
- 0 = Analog-to-digital conversion is not done or has not started

Clearing this bit will not affect any operation in progress.

Note 1: When using 1:1 PBCLK divisor, the user software should not read/write the peripheral's SFRs in the SYSCLK cycle immediately following the instruction that clears the module's ON bit.

2: If ASAM = 0, software can write a '1' to start sampling. This bit is automatically set by hardware if ASAM = 1. If SSRC = 0, software can write a '0' to end sampling and start conversion. If SSRC ≠ 0, this bit is automatically cleared by hardware to end sampling and start conversion.

3: This bit is automatically set by hardware when analog-to-digital conversion is complete. Software can write a '0' to clear this bit (a write of '1' is not allowed). Clearing this bit does not affect any operation already in progress. This bit is automatically cleared by hardware at the start of a new conversion.

© 2014-2019 Microchip Technology Inc.

REGISTER 22-2: AD1CON2: ADC CONTROL REGISTER 2

Bit Range	Bit 31/23/15/7	Bit 30/22/14/6	Bit 29/21/13/5	Bit 28/20/12/4	Bit 27/19/11/3	Bit 26/18/10/2	Bit 25/17/9/1	Bit 24/16/8/0
31:24	U-0	U-0	U-0	U-0	U-0	U-0	U-0	U-0
	—	—	—	—	—	—	—	—
23:16	U-0	U-0	U-0	U-0	U-0	U-0	U-0	U-0
	—	—	—	—	—	—	—	—
15:8	R/W-0	R/W-0	R/W-0	R/W-0	U-0	R/W-0	U-0	U-0
	VCFG<2:0>			OFFCAL	—	CSCNA	—	—
7:0	R-0	U-0	R/W-0	R/W-0	R/W-0	R/W-0	R/W-0	R/W-0
	BUFS	—	SMPI<3:0>				BUFM	ALTS

Legend:			
R = Readable bit	W = Writable bit	U = Unimplemented bit, read as ‘0’	
-n = Value at POR	‘1’ = Bit is set	‘0’ = Bit is cleared	x = Bit is unknown

bit 31-16 **Unimplemented:** Read as ‘0’

bit 15-13 **VCFG<2:0>:** Voltage Reference Configuration bits

	VREFH	VREFL
000	AVDD	AVss
001	External VREF+ pin	AVSS
010	AVDD	External VREF- pin
011	External VREF+ pin	External VREF- pin
1xx	AVDD	AVSS

bit 12 **OFFCAL:** Input Offset Calibration Mode Select bit
1 = Enable Offset Calibration mode
Positive and negative inputs of the sample and hold amplifier are connected to VREFL
0 = Disable Offset Calibration mode
The inputs to the sample and hold amplifier are controlled by AD1CHS or AD1CSSL

bit 11 **Unimplemented:** Read as ‘0’

bit 10 **CSCNA:** Input Scan Select bit
1 = Scan inputs
0 = Do not scan inputs

bit 9-8 **Unimplemented:** Read as ‘0’

bit 7 **BUFS:** Buffer Fill Status bit
Only valid when BUFM = 1.
1 = ADC is currently filling buffer 0x8-0xF, user should access data in 0x0-0x7
0 = ADC is currently filling buffer 0x0-0x7, user should access data in 0x8-0xF

bit 6 **Unimplemented:** Read as ‘0’

bit 5-2 **SMPI<3:0>:** Sample/Convert Sequences Per Interrupt Selection bits
1111 = Interrupts at the completion of conversion for each 16th sample/convert sequence
1110 = Interrupts at the completion of conversion for each 15th sample/convert sequence
.
.
.
0001 = Interrupts at the completion of conversion for each 2nd sample/convert sequence
0000 = Interrupts at the completion of conversion for each sample/convert sequence

bit 1 **BUFM:** ADC Result Buffer Mode Select bit
1 = Buffer configured as two 8-word buffers, ADC1BUF7-ADC1BUF0, ADC1BUFF-ADCBUF8
0 = Buffer configured as one 16-word buffer ADC1BUFF-ADC1BUF0

bit 0 **ALTS:** Alternate Input Sample Mode Select bit
1 = Uses Sample A input multiplexer settings for first sample, then alternates between Sample B and Sample A input multiplexer settings for all subsequent samples
0 = Always use Sample A input multiplexer settings

REGISTER 22-3: AD1CON3: ADC CONTROL REGISTER 3

Bit Range	Bit 31/23/15/7	Bit 30/22/14/6	Bit 29/21/13/5	Bit 28/20/12/4	Bit 27/19/11/3	Bit 26/18/10/2	Bit 25/17/9/1	Bit 24/16/8/0
31:24	U-0	U-0	U-0	U-0	U-0	U-0	U-0	U-0
	—	—	—	—	—	—	—	—
23:16	U-0	U-0	U-0	U-0	U-0	U-0	U-0	U-0
	—	—	—	—	—	—	—	—
15:8	R/W-0	U-0	U-0	R/W-0	R/W-0	R/W-0	R/W-0	R/W-0
	ADRC	—	—	SAMC<4:0>(1)				
7:0	R/W-0	R/W-0	R/W-0	R/W-0	R/W-0	R/W-0	R/W	R/W-0
	ADCS<7:0>(2)							

Legend:			
R = Readable bit	W = Writable bit	U = Unimplemented bit, read as ‘0’	
-n = Value at POR	‘1’ = Bit is set	‘0’ = Bit is cleared	x = Bit is unknown

bit 31-16 **Unimplemented:** Read as ‘0’

bit 15 **ADRC:** ADC Conversion Clock Source bit
1 = Clock derived from FRC
0 = Clock derived from Peripheral Bus Clock (PBCLK)

bit 14-13 **Unimplemented:** Read as ‘0’

bit 12-8 **SAMC<4:0>:** Auto-Sample Time bits(1)
11111 = 31 TAD
•
•
•
00001 = 1 TAD
00000 = 0 TAD (Not allowed)

bit 7-0 **ADCS<7:0>:** ADC Conversion Clock Select bits(2)
11111111 =TPB • 2 • (ADCS<7:0> + 1) = 512 • TPB = TAD
•
•
•
00000001 =TPB • 2 • (ADCS<7:0> + 1) = 4 • TPB = TAD
00000000 =TPB • 2 • (ADCS<7:0> + 1) = 2 • TPB = TAD

Note 1: This bit is only used if the SSRC<2:0> bits (AD1CON1<7:5>) = 111.
2: This bit is not used if the ADRC bit (AD1CON3<15>) = 1.

© 2014-2019 Microchip Technology Inc.

REGISTER 22-4: AD1CHS: ADC INPUT SELECT REGISTER

Bit Range	Bit 31/23/15/7	Bit 30/22/14/6	Bit 29/21/13/5	Bit 28/20/12/4	Bit 27/19/11/3	Bit 26/18/10/2	Bit 25/17/9/1	Bit 24/16/8/0
31:24	R/W-0	U-0	R/W-0	R/W-0	R/W-0	R/W-0	R/W-0	R/W-0
	CH0NB	—	CH0SB<5:0>					
23:16	R/W-0	U-0	R/W-0	R/W-0	R/W-0	R/W-0	R/W-0	R/W-0
	CH0NA	—	CH0SA<5:0>					
15:8	U-0	U-0	U-0	U-0	U-0	U-0	U-0	U-0
	—	—	—	—	—	—	—	—
7:0	U-0	U-0	U-0	U-0	U-0	U-0	U-0	U-0
	—	—	—	—	—	—	—	—

Legend:			
R = Readable bit	W = Writable bit	U = Unimplemented bit, read as ‘0’	
-n = Value at POR	‘1’ = Bit is set	‘0’ = Bit is cleared	x = Bit is unknown

bit 31 **CH0NB:** Negative Input Select bit for Sample B
`1` = Channel 0 negative input is AN1
`0` = Channel 0 negative input is VREFL

bit 30 **Unimplemented:** Read as ‘`0`’

bit 29-24 **CH0SB<5:0>:** Positive Input Select bits for Sample B

For 64-pin devices:
`011110` = Channel 0 positive input is Open(1)
`011101` = Channel 0 positive input is CTMU temperature sensor (CTMUT)(2)
`011100` = Channel 0 positive input is IVREF(3)
`011011` = Channel 0 positive input is AN27
.
.
.
`000001` = Channel 0 positive input is AN1
`000000` = Channel 0 positive input is AN0

For 100-pin devices:
`110010` = Channel 0 positive input is Open(1)
`110001` = Channel 0 positive input is CTMU temperature sensor (CTMUT)(2)
`110000` = Channel 0 positive input is IVREF(3)
`101111` = Channel 0 positive input is AN47
.
.
.
`0000001` = Channel 0 positive input is AN1
`0000000` = Channel 0 positive input is AN0

bit 23 **CH0NA:** Negative Input Select bit for Sample A Multiplexer Setting(3)
`1` = Channel 0 negative input is AN1
`0` = Channel 0 negative input is VREFL

bit 22 **Unimplemented:** Read as ‘`0`’

Note 1: This selection is only used with CTMU capacitive and time measurement.
2: See **Section 26.0 “Charge Time Measurement Unit (CTMU)”** for more information.
3: Internal precision 1.2V reference. See **Section 24.0 “Comparator”** for more information.

REGISTER 22-4: AD1CHS: ADC INPUT SELECT REGISTER (CONTINUED)

bit 21-16 **CH0SA<5:0>:** Positive Input Select bits for Sample A Multiplexer Setting

For 64-pin devices:

`011110` = Channel 0 positive input is Open(1)
`011101` = Channel 0 positive input is CTMU temperature sensor (CTMUT)(2)
`011100` = Channel 0 positive input is IVREF(3)
`011011` = Channel 0 positive input is AN27
•
•
•
`000001` = Channel 0 positive input is AN1
`000000` = Channel 0 positive input is AN0

For 100-pin devices:

`110010` = Channel 0 positive input is Open(1)
`110001` = Channel 0 positive input is CTMU temperature sensor (CTMUT)(2)
`110000` = Channel 0 positive input is IVREF(3)
`101111` = Channel 0 positive input is AN47
•
•
•
`0000001` = Channel 0 positive input is AN1
`0000000` = Channel 0 positive input is AN0

bit 15-0 **Unimplemented:** Read as '0'

Note 1: This selection is only used with CTMU capacitive and time measurement.
2: See **Section 26.0 "Charge Time Measurement Unit (CTMU)"** for more information.
3: Internal precision 1.2V reference. See **Section 24.0 "Comparator"** for more information.

© 2014-2019 Microchip Technology Inc.

REGISTER 22-5: AD1CSSL: ADC INPUT SCAN SELECT REGISTER

Bit Range	Bit 31/23/15/7	Bit 30/22/14/6	Bit 29/21/13/5	Bit 28/20/12/4	Bit 27/19/11/3	Bit 26/18/10/2	Bit 25/17/9/1	Bit 24/16/8/0
31:24	R/W-0	R/W-0	R/W-0	R/W-0	R/W-0	R/W-0	R/W-0	R/W-0
	CSSL31(2)	CSSL30(1)	CSSL29(1)	CSSL28(1)	CSSL27	CSSL26	CSSL25	CSSL24
23:16	R/W-0	R/W-0	R/W-0	R/W-0	R/W-0	R/W-0	R/W-0	R/W-0
	CSSL23	CSSL21	CSSL21	CSSL20	CSSL19	CSSL18	CSSL17	CSSL16
15:8	R/W-0	R/W-0	R/W-0	R/W-0	R/W-0	R/W-0	R/W-0	R/W-0
	CSSL15	CSSL14	CSSL13	CSSL12	CSSL11	CSSL10	CSSL9	CSSL8
7:0	R/W-0	R/W-0	R/W-0	R/W-0	R/W-0	R/W-0	R/W-0	R/W-0
	CSSL7	CSSL6	CSSL5	CSSL4	CSSL3	CSSL2	CSSL1	CSSL0

Legend:			
R = Readable bit	W = Writable bit	U = Unimplemented bit, read as ‘0’	
-n = Value at POR	‘1’ = Bit is set	‘0’ = Bit is cleared	x = Bit is unknown

bit 31-0 **CSSL<31:0>:** ADC Input Pin Scan Selection bits
1 = Select ANx for input scan; CSSLx = ANx, where ‘x’ = 0-31
0 = Skip ANx for input scan; CSSLx = ANx, where ‘x’ = 0-31

Note 1: For devices with 64 pins, CSSL28 selects IVREF (Band Gap) for scan; CSSL29 selects CTMU temperature diode for scan; and CSSL30 selects CTMU input for scan

2: On devices with less than 32 analog inputs, all CSSLx bits can be selected; however, inputs selected for scan without a corresponding input on the device will convert to VREFL.

REGISTER 22-6: AD1CSSL2: ADC INPUT SCAN SELECT REGISTER 2

Bit Range	Bit 31/23/15/7	Bit 30/22/14/6	Bit 29/21/13/5	Bit 28/20/12/4	Bit 27/19/11/3	Bit 26/18/10/2	Bit 25/17/9/1	Bit 24/16/8/0
31:24	U-0	U-0	U-0	U-0	U-0	U-0	U-0	U-0
	—	—	—	—	—	—	—	—
23:16	U-0	U-0	U-0	U-0	U-0	R/W-0	R/W-0	R/W-0
	—	—	—	—	—	CSSL50(1)	CSSL49(1)	CSSL48(1)
15:8	R/W-0	R/W-0	R/W-0	R/W-0	R/W-0	R/W-0	R/W-0	R/W-0
	CSSL47	CSSL46	CSSL45	CSSL44	CSSL43	CSSL42	CSSL41	CSSL40
7:0	R/W-0	R/W-0	R/W-0	R/W-0	R/W-0	R/W-0	R/W-0	R/W-0
	CSSL39	CSSL38	CSSL37	CSSL36	CSSL35	CSSL34	CSSL33	CSSL32

Legend:			
R = Readable bit	W = Writable bit	U = Unimplemented bit, read as ‘0’	
-n = Value at POR	‘1’ = Bit is set	‘0’ = Bit is cleared	x = Bit is unknown

bit 31-19 **Unimplemented:** Read as ‘0’
bit 18-0 **CSSL<50:32>:** ADC Input Pin Scan Selection bits
1 = Select ANx for input scan; CSSLx = ANx, where ‘x’ = 32-50
0 = Skip ANx for input scan; CSSLx = ANx, where ‘x’ = 32-50

Note 1: For devices with 100 or more pins, CSSL48 selects IVREF (Band Gap) for scan; CSSL49 selects CTMU temperature diode for scan; and CSSL50 selects CTMU input for scan

Note: The ANx inputs in this register only support devices with 100 or more pins.

NOTES:

© 2014-2019 Microchip Technology Inc.

23.0 CONTROLLER AREA NETWORK (CAN)

Note: This data sheet summarizes the features of the PIC32MX1XX/2XX/5XX 64/100-pin family of devices. It is not intended to be a comprehensive reference source. To complement the information in this data sheet, refer to **Section 34. "Controller Area Network (CAN)"** (DS60001154) in the *"PIC32 Family Reference Manual"*, which is available from the Microchip web site (www.microchip.com/PIC32).

The Controller Area Network (CAN) module supports the following key features:

- Standards Compliance:
  - Full CAN 2.0B compliance
  - Programmable bit rate up to 1 Mbps
- Message Reception and Transmission:
  - 16 message FIFOs
  - Each FIFO can have up to 16 messages for a total of 256 messages
  - FIFO can be a transmit message FIFO or a receive message FIFO
  - User-defined priority levels for message FIFOs used for transmission
  - 16 acceptance filters for message filtering
  - Four acceptance filter mask registers for message filtering
  - Automatic response to remote transmit request
  - DeviceNet™ addressing support
- Additional Features:
  - Loopback, Listen All Messages, and Listen Only modes for self-test, system diagnostics and bus monitoring
  - Low-power operating modes
  - CAN module is a bus master on the PIC32 system bus
  - Use of DMA is not required
  - Dedicated time-stamp timer
  - Dedicated DMA channels
  - Data-only Message Reception mode

Figure 23-1 illustrates the general structure of the CAN module.

FIGURE 23-1: PIC32 CAN MODULE BLOCK DIAGRAM

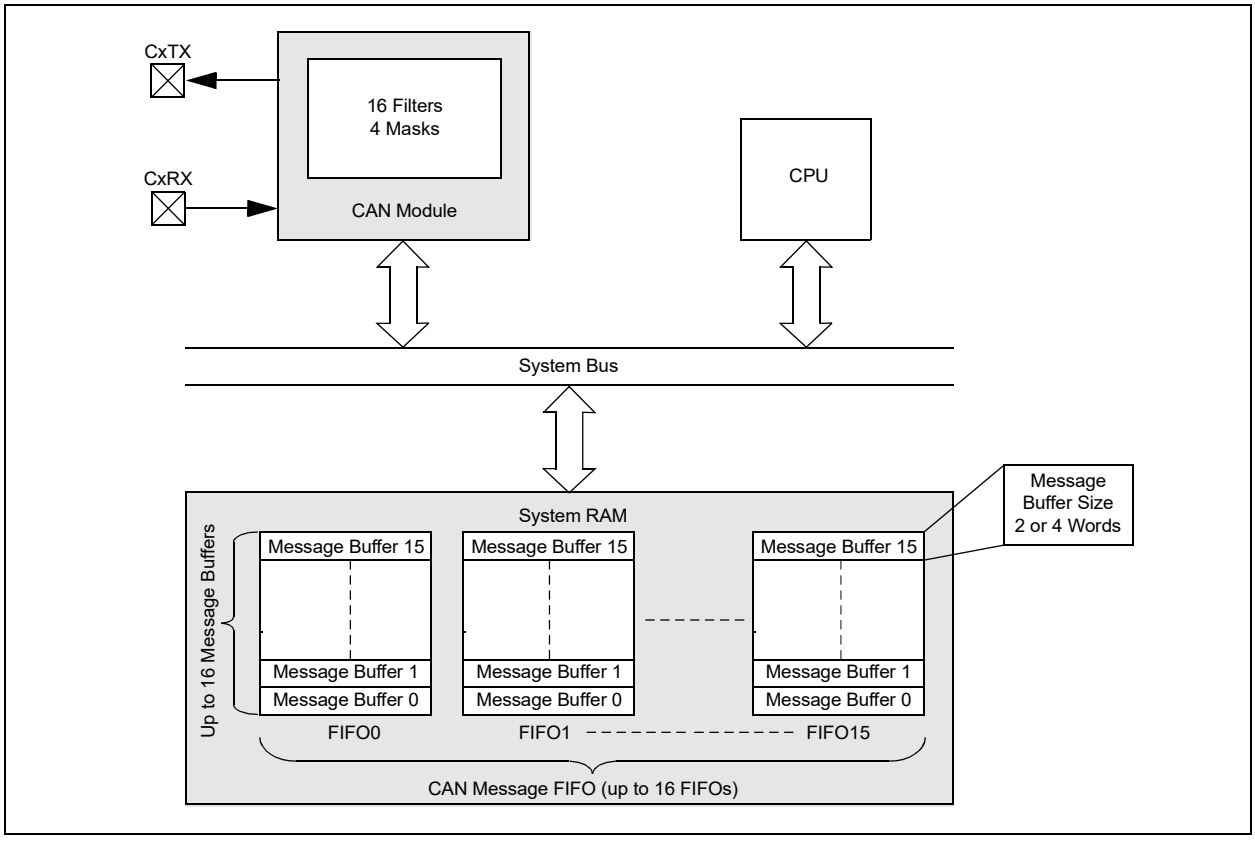

23.1 Control Registers

TABLE 23-1: CAN1 REGISTER SUMMARY

Virtual Address (BF88_#)	Register Name(1)	Bit Range	Bits 31/15	30/14	29/13	28/12	27/11	26/10	25/9	24/8	23/7	22/6	21/5	20/4	19/3	18/2	17/1	16/0	All Resets
B000	C1CON	31:16	—	—	—	—	ABAT	REQOP<2:0>			OPMOD<2:0>			CANCAP	—	—	—	—	0480
		15:0	ON	—	SIDLE	—	CANBUSY	—	—	—	—	—	—	DNCNT<4:0>					0000
B010	C1CFG	31:16	—	—	—	—	—	—	—	—	—	WAKFIL	—	—	—	SEG2PH<2:0>			0000
		15:0	SEG2PHTS	SAM	SEG1PH<2:0>			PRSEG<2:0>			SJW<1:0>		BRP<5:0>						0000
B020	C1INT	31:16	IVRIE	WAKIE	CERRIE	SERRIE	RBOVIE	—	—	—	—	—	—	—	MODIE	CTMRIE	RBIE	TBIE	0000
		15:0	IVRIF	WAKIF	CERRIF	SERRIF	RBOVIF	—	—	—	—	—	—	—	MODIF	CTMRIF	RBIF	TBIF	0000
B030	C1VEC	31:16	—	—	—	—	—	—	—	—	—	—	—	—	—	—	—	—	0000
		15:0	—	—	—	FILHIT<4:0>					—	ICODE<6:0>							0040
B040	C1TREC	31:16	—	—	—	—	—	—	—	—	—	—	TXBO	TXBP	RXBP	TXWARN	RXWARN	EWARN	0000
		15:0	TERRCNT<7:0>								RERRCNT<7:0>								0000
B050	C1FSTAT	31:16	—	—	—	—	—	—	—	—	—	—	—	—	—	—	—	—	0000
		15:0	FIFOIP15	FIFOIP14	FIFOIP13	FIFOIP12	FIFOIP11	FIFOIP10	FIFOIP9	FIFOIP8	FIFOIP7	FIFOIP6	FIFOIP5	FIFOIP4	FIFOIP3	FIFOIP2	FIFOIP1	FIFOIP0	0000
B060	C1RXOVF	31:16	—	—	—	—	—	—	—	—	—	—	—	—	—	—	—	—	0000
		15:0	RXOVF15	RXOVF14	RXOVF13	RXOVF12	RXOVF11	RXOVF10	RXOVF9	RXOVF8	RXOVF7	RXOVF6	RXOVF5	RXOVF4	RXOVF3	RXOVF2	RXOVF1	RXOVF0	0000
B070	C1TMR	31:16	CANTS<15:0>																0000
		15:0	CANTSPRE<15:0>																0000
B080	C1RXM0	31:16	SID<10:0>											-—	MIDE	—	EID<17:16>		xxxx
		15:0	EID<15:0>																xxxx
B090	C1RXM1	31:16	SID<10:0>											-—	MIDE	—	EID<17:16>		xxxx
		15:0	EID<15:0>																xxxx
B0A0	C1RXM2	31:16	SID<10:0>											-—	MIDE	—	EID<17:16>		xxxx
		15:0	EID<15:0>																xxxx
B0B0	C1RXM3	31:16	SID<10:0>											-—	MIDE	—	EID<17:16>		xxxx
		15:0	EID<15:0>																xxxx
B0C0	C1FLTCON0	31:16	FLTEN3	MSEL3<1:0>		FSEL3<4:0>					FLTEN2	MSEL2<1:0>		FSEL2<4:0>					0000
		15:0	FLTEN1	MSEL1<1:0>		FSEL1<4:0>					FLTEN0	MSEL0<1:0>		FSEL0<4:0>					0000
B0D0	C1FLTCON1	31:16	FLTEN7	MSEL7<1:0>		FSEL7<4:0>					FLTEN6	MSEL6<1:0>		FSEL6<4:0>					0000
		15:0	FLTEN5	MSEL5<1:0>		FSEL5<4:0>					FLTEN4	MSEL4<1:0>		FSEL4<4:0>					0000
B0E0	C1FLTCON2	31:16	FLTEN11	MSEL11<1:0>		FSEL11<4:0>					FLTEN10	MSEL10<1:0>		FSEL10<4:0>					0000
		15:0	FLTEN9	MSEL9<1:0>		FSEL9<4:0>					FLTEN8	MSEL8<1:0>		FSEL8<4:0>					0000
B0F0	C1FLTCON3	31:16	FLTEN15	MSEL15<1:0>		FSEL15<4:0>					FLTEN14	MSEL14<1:0>		FSEL14<4:0>					0000
		15:0	FLTEN13	MSEL13<1:0>		FSEL13<4:0>					FLTEN12	MSEL12<1:0>		FSEL12<4:0>					0000
B140	C1RXFn (n = 0-15)	31:16	SID<10:0>											-—	EXID	—	EID<17:16>		xxxx
		15:0	EID<15:0>																xxxx

Legend: x = unknown value on Reset; — = unimplemented, read as '0'. Reset values are shown in hexadecimal.

Note 1: All registers in this table have corresponding CLR, SET and INV registers at their virtual addresses, plus offsets of 0x4, 0x8 and 0xC, respectively. See **Section 11.2 "CLR, SET, and INV Registers"** for more information.

© 2014-2019 Microchip Technology Inc.

TABLE 23-1: CAN1 REGISTER SUMMARY (CONTINUED)

Virtual Address (BF88_#)	Register Name(1)	Bit Range	Bits 31/15	30/14	29/13	28/12	27/11	26/10	25/9	24/8	23/7	22/6	21/5	20/4	19/3	18/2	17/1	16/0	All Resets
B340	C1FIFOBA	31:16	C1FIFOBA<31:0>																0000
		15:0																	0000
B350	C1FIFOCONn (n = 0-15)	31:16	—	—	—	—	—	—	—	—	—	—	—	FSIZE<4:0>					0000
		15:0	—	FRESET	UINC	DONLY	—	—	—	—	TXEN	TXABAT	TXLARB	TXERR	TXREQ	RTREN	TXPRI<1:0>		0000
B360	C1FIFOINTn (n = 0-15)	31:16	—	—	—	—	—	TXNFULLIE	TXHALFIE	TXEMPTYIE	—	—	—	—	RXOVFLIE	RXFULLIE	RXHALFIE	RXN EMPTYIE	0000
		15:0	—	—	—	—	—	TXNFULLIF	TXHALFIF	TXEMPTYIF	—	—	—	—	RXOVFLIF	RXFULLIF	RXHALFIF	RXN EMPTYIF	0000
B370	C1FIFOUAn (n = 0-15)	31:16	C1FIFOUA<31:0>																0000
		15:0																	0000
B380	C1FIFOCIn (n = 0-15)	31:16	—	—	—	—	—	—	—	—	—	—	—	—	—	—	—	—	0000
		15:0	—	—	—	—	—	—	—	—	—	—	—	C1FIFOCIn<4:0>					0000

Legend: x = unknown value on Reset; — = unimplemented, read as '0'. Reset values are shown in hexadecimal.

Note 1: All registers in this table have corresponding CLR, SET and INV registers at their virtual addresses, plus offsets of 0x4, 0x8 and 0xC, respectively. See **Section 11.2 "CLR, SET, and INV Registers"** for more information.

© 2014-2019 Microchip Technology Inc.

REGISTER 23-1: C1CON: CAN MODULE CONTROL REGISTER

Bit Range	Bit 31/23/15/7	Bit 30/22/14/6	Bit 29/21/13/5	Bit 28/20/12/4	Bit 27/19/11/3	Bit 26/18/10/2	Bit 25/17/9/1	Bit 24/16/8/0
31:24	U-0	U-0	U-0	U-0	S/HC-0	R/W-1	R/W-0	R/W-0
	—	—	—	—	ABAT	REQOP<2:0>		
23:16	R-1	R-0	R-0	R/W-0	U-0	U-0	U-0	U-0
	OPMOD<2:0>			CANCAP	—	—	—	—
15:8	R/W-0	U-0	R/W-0	U-0	R-0	U-0	U-0	U-0
	ON(1)	—	SIDLE	—	CANBUSY	—	—	—
7:0	U-0	U-0	U-0	R/W-0	R/W-0	R/W-0	R/W-0	R/W-0
	—	—	—	DNCNT<4:0>				

Legend:	HC = Hardware Clear	S = Settable bit	
R = Readable bit	W = Writable bit	U = Unimplemented bit, read as ‘0’	
-n = Value at POR	‘1’ = Bit is set	‘0’ = Bit is cleared	x = Bit is unknown

bit 31-28 **Unimplemented:** Read as ‘0’

bit 27 **ABAT:** Abort All Pending Transmissions bit
1 = Signal all transmit buffers to abort transmission
0 = Module will clear this bit when all transmissions aborted

bit 26-24 **REQOP<2:0>:** Request Operation Mode bits
111 = Set Listen All Messages mode
110 = Reserved
101 = Reserved
100 = Set Configuration mode
011 = Set Listen Only mode
010 = Set Loopback mode
001 = Set Disable mode
000 = Set Normal Operation mode

bit 23-21 **OPMOD<2:0>:** Operation Mode Status bits
111 = Module is in Listen All Messages mode
110 = Reserved
101 = Reserved
100 = Module is in Configuration mode
011 = Module is in Listen Only mode
010 = Module is in Loopback mode
001 = Module is in Disable mode
000 = Module is in Normal Operation mode

bit 20 **CANCAP:** CAN Message Receive Time Stamp Timer Capture Enable bit
1 = CANTMR value is stored on valid message reception and is stored with the message
0 = Disable CAN message receive time stamp timer capture and stop CANTMR to conserve power

bit 19-16 **Unimplemented:** Read as ‘0’

bit 15 **ON:** CAN On bit(1)
1 = CAN module is enabled
0 = CAN module is disabled

bit 14 **Unimplemented:** Read as ‘0’

Note 1: If the user application clears this bit, it may take a number of cycles before the CAN module completes the current transaction and responds to this request. The user application should poll the CANBUSY bit to verify that the request has been honored.

© 2014-2019 Microchip Technology Inc.

REGISTER 23-1: C1CON: CAN MODULE CONTROL REGISTER (CONTINUED)

bit 13 **SIDLE:** CAN Stop in Idle bit
1 = CAN Stops operation when system enters Idle mode
0 = CAN continues operation when system enters Idle mode

bit 12 **Unimplemented:** Read as '0'

bit 11 **CANBUSY:** CAN Module is Busy bit
1 = The CAN module is active
0 = The CAN module is completely disabled

bit 10-5 **Unimplemented:** Read as '0'

bit 4-0 **DNCNT<4:0>:** Device Net Filter Bit Number bits
10011-11111 = Invalid Selection (compare up to 18-bits of data with EID)
10010 = Compare up to data byte 2 bit 6 with EID17 (C1RXFn<17>)
•
•
•
00001 = Compare up to data byte 0 bit 7 with EID0 (C1RXFn<0>)
00000 = Do not compare data bytes

Note 1: If the user application clears this bit, it may take a number of cycles before the CAN module completes the current transaction and responds to this request. The user application should poll the CANBUSY bit to verify that the request has been honored.

REGISTER 23-2: C1CFG: CAN BAUD RATE CONFIGURATION REGISTER

Bit Range	Bit 31/23/15/7	Bit 30/22/14/6	Bit 29/21/13/5	Bit 28/20/12/4	Bit 27/19/11/3	Bit 26/18/10/2	Bit 25/17/9/1	Bit 24/16/8/0
31:24	U-0	U-0	U-0	U-0	U-0	U-0	U-0	U-0
	—	—	—	—	—	—	—	—
23:16	U-0	R/W-0	U-0	U-0	U-0	R/W-0	R/W-0	R/W-0
	—	WAKFIL	—	—	—	SEG2PH<2:0>(1,4)		
15:8	R/W-0	R/W-0	R/W-0	R/W-0	R/W-0	R/W-0	R/W-0	R/W-0
	SEG2PHTS(1)	SAM(2)	SEG1PH<2:0>			PRSEG<2:0>		
7:0	R/W-0	R/W-0	R/W-0	R/W-0	R/W-0	R/W-0	R/W-0	R/W-0
	SJW<1:0>(3)		BRP<5:0>					

Legend:	HC = Hardware Clear	S = Settable bit	
R = Readable bit	W = Writable bit	U = Unimplemented bit, read as ‘0’	
-n = Value at POR	‘1’ = Bit is set	‘0’ = Bit is cleared	x = Bit is unknown

bit 31-23 **Unimplemented:** Read as ‘0’

bit 22 **WAKFIL:** CAN Bus Line Filter Enable bit
1 = Use CAN bus line filter for wake-up
0 = CAN bus line filter is not used for wake-up

bit 21-19 **Unimplemented:** Read as ‘0’

bit 18-16 **SEG2PH<2:0>:** Phase Buffer Segment 2 bits(1,4)
111 = Length is 8 x TQ
•
•
•
000 = Length is 1 x TQ

bit 15 **SEG2PHTS:** Phase Segment 2 Time Select bit(1)
1 = Freely programmable
0 = Maximum of SEG1PH or Information Processing Time, whichever is greater

bit 14 **SAM:** Sample of the CAN Bus Line bit(2)
1 = Bus line is sampled three times at the sample point
0 = Bus line is sampled once at the sample point

bit 13-11 **SEG1PH<2:0>:** Phase Buffer Segment 1 bits(4)
111 = Length is 8 x TQ
•
•
•
000 = Length is 1 x TQ

Note 1: SEG2PH ≤ SEG1PH. If SEG2PHTS is clear, SEG2PH will be set automatically.
2: 3 Time bit sampling is not allowed for BRP < 2.
3: SJW ≤ SEG2PH.
4: The Time Quanta per bit must be greater than 7 (that is, TQBIT > 7).

Note: This register can only be modified when the CAN module is in Configuration mode (OPMOD<2:0> (C1CON<23:21>) = 100).

© 2014-2019 Microchip Technology Inc.

REGISTER 23-2: C1CFG: CAN BAUD RATE CONFIGURATION REGISTER (CONTINUED)

bit 10-8 **PRSEG<2:0>:** Propagation Time Segment bits(4)

111 = Length is 8 x TQ

•

•

•

000 = Length is 1 x TQ

bit 7-6 **SJW<1:0>:** Synchronization Jump Width bits(3)

11 = Length is 4 x TQ
10 = Length is 3 x TQ
01 = Length is 2 x TQ
00 = Length is 1 x TQ

bit 5-0 **BRP<5:0>:** Baud Rate Prescaler bits

111111 = TQ = (2 x 64)/SYSCLK
111110 = TQ = (2 x 63)/SYSCLK

•

•

•

000001 = TQ = (2 x 2)/SYSCLK
000000 = TQ = (2 x 1)/SYSCLK

Note 1: SEG2PH ≤ SEG1PH. If SEG2PHTS is clear, SEG2PH will be set automatically.

2: 3 Time bit sampling is not allowed for BRP < 2.

3: SJW ≤ SEG2PH.

4: The Time Quanta per bit must be greater than 7 (that is, TQBIT > 7).

Note: This register can only be modified when the CAN module is in Configuration mode (OPMOD<2:0> (C1CON<23:21>) = 100).

REGISTER 23-3: C1INT: CAN INTERRUPT REGISTER

Bit Range	Bit 31/23/15/7	Bit 30/22/14/6	Bit 29/21/13/5	Bit 28/20/12/4	Bit 27/19/11/3	Bit 26/18/10/2	Bit 25/17/9/1	Bit 24/16/8/0
31:24	R/W-0	R/W-0	R/W-0	R/W-0	R/W-0	U-0	U-0	U-0
	IVRIE	WAKIE	CERRIE	SERRIE	RBOVIE	—	—	—
23:16	U-0	U-0	U-0	U-0	R/W-0	R/W-0	R/W-0	R/W-0
	—	—	—	—	MODIE	CTMRIE	RBIE	TBIE
15:8	R/W-0	R/W-0	R/W-0	R/W-0	R/W-0	U-0	U-0	U-0
	IVRIF	WAKIF	CERRIF	SERRIF(1)	RBOVIF	—	—	—
7:0	U-0	U-0	U-0	U-0	R/W-0	R/W-0	R/W-0	R/W-0
	—	—	—	—	MODIF	CTMRIF	RBIF	TBIF

Legend:			
R = Readable bit	W = Writable bit	U = Unimplemented bit, read as ‘0’	
-n = Value at POR	‘1’ = Bit is set	‘0’ = Bit is cleared	x = Bit is unknown

bit 31 **IVRIE:** Invalid Message Received Interrupt Enable bit
1 = Interrupt request is enabled
0 = Interrupt request is not enabled

bit 30 **WAKIE:** CAN Bus Activity Wake-up Interrupt Enable bit
1 = Interrupt request is enabled
0 = Interrupt request is not enabled

bit 29 **CERRIE:** CAN Bus Error Interrupt Enable bit
1 = Interrupt request is enabled
0 = Interrupt request is not enabled

bit 28 **SERRIE:** System Error Interrupt Enable bit
1 = Interrupt request is enabled
0 = Interrupt request is not enabled

bit 27 **RBOVIE:** Receive Buffer Overflow Interrupt Enable bit
1 = Interrupt request is enabled
0 = Interrupt request is not enabled

bit 26-20 **Unimplemented:** Read as ‘0’

bit 19 **MODIE:** Mode Change Interrupt Enable bit
1 = Interrupt request is enabled
0 = Interrupt request is not enabled

bit 18 **CTMRIE:** CAN Timestamp Timer Interrupt Enable bit
1 = Interrupt request is enabled
0 = Interrupt request is not enabled

bit 17 **RBIE:** Receive Buffer Interrupt Enable bit
1 = Interrupt request is enabled
0 = Interrupt request is not enabled

bit 16 **TBIE:** Transmit Buffer Interrupt Enable bit
1 = Interrupt request is enabled
0 = Interrupt request is not enabled

bit 15 **IVRIF:** Invalid Message Received Interrupt Flag bit
1 = An invalid messages interrupt has occurred
0 = An invalid message interrupt has not occurred

Note 1: This bit can only be cleared by turning the CAN module Off and On by clearing or setting the ON bit (C1CON<15>).

© 2014-2019 Microchip Technology Inc.

REGISTER 23-3: C1INT: CAN INTERRUPT REGISTER (CONTINUED)

bit 14 **WAKIF:** CAN Bus Activity Wake-up Interrupt Flag bit
1 = A bus wake-up activity interrupt has occurred
0 = A bus wake-up activity interrupt has not occurred

bit 13 **CERRIF:** CAN Bus Error Interrupt Flag bit
1 = A CAN bus error has occurred
0 = A CAN bus error has not occurred

bit 12 **SERRIF:** System Error Interrupt Flag bit(1)
1 = A system error occurred (typically an illegal address was presented to the system bus)
0 = A system error has not occurred

bit 11 **RBOVIF:** Receive Buffer Overflow Interrupt Flag bit
1 = A receive buffer overflow has occurred
0 = A receive buffer overflow has not occurred

bit 10-4 **Unimplemented:** Read as '0'

bit 3 **MODIF:** CAN Mode Change Interrupt Flag bit
1 = A CAN module mode change has occurred (OPMOD<2:0> has changed to reflect REQOP)
0 = A CAN module mode change has not occurred

bit 2 **CTMRIF:** CAN Timer Overflow Interrupt Flag bit
1 = A CAN timer (CANTMR) overflow has occurred
0 = A CAN timer (CANTMR) overflow has not occurred

bit 1 **RBIF:** Receive Buffer Interrupt Flag bit
1 = A receive buffer interrupt is pending
0 = A receive buffer interrupt is not pending

bit 0 **TBIF:** Transmit Buffer Interrupt Flag bit
1 = A transmit buffer interrupt is pending
0 = A transmit buffer interrupt is not pending

Note 1: This bit can only be cleared by turning the CAN module Off and On by clearing or setting the ON bit (C1CON<15>).

REGISTER 23-4: C1VEC: CAN INTERRUPT CODE REGISTER

Bit Range	Bit 31/23/15/7	Bit 30/22/14/6	Bit 29/21/13/5	Bit 28/20/12/4	Bit 27/19/11/3	Bit 26/18/10/2	Bit 25/17/9/1	Bit 24/16/8/0
31:24	U-0	U-0	U-0	U-0	U-0	U-0	U-0	U-0
	—	—	—	—	—	—	—	—
23:16	U-0	U-0	U-0	U-0	U-0	U-0	U-0	U-0
	—	—	—	—	—	—	—	—
15:8	U-0	U-0	U-0	R-0	R-0	R-0	R-0	R-0
	—	—	—	FILHIT<4:0>				
7:0	U-0	R-1	R-0	R-0	R-0	R-0	R-0	R-0
	—	ICODE<6:0>(1)						

Legend:			
R = Readable bit	W = Writable bit	U = Unimplemented bit, read as ‘0’	
-n = Value at POR	‘1’ = Bit is set	‘0’ = Bit is cleared	x = Bit is unknown

bit 31-13 **Unimplemented:** Read as ‘0’

bit 12-8 **FILHIT<4:0>:** Filter Hit Number bit

11111 = Reserved
.
.
.
10000 = Reserved
01111 = Filter 15
.
.
.
00000 = Filter 0

bit 7 **Unimplemented:** Read as ‘0’

bit 6-0 **ICODE<6:0>:** Interrupt Flag Code bits(1)

1111111 = Reserved
.
.
.
1001001 = Reserved
1001000 = Invalid message received (IVRIF)
1000111 = CAN module mode change (MODIF)
1000110 = CAN timestamp timer (CTMRIF)
1000101 = Bus bandwidth error (SERRIF)
1000100 = Address error interrupt (SERRIF)
1000011 = Receive FIFO overflow interrupt (RBOVIF)
1000010 = Wake-up interrupt (WAKIF)
1000001 = Error Interrupt (CERRIF)
1000000 = No interrupt
0111111 = Reserved
.
.
.
0010000 = Reserved
0001111 = FIFO15 Interrupt (C1FSTAT<15> set)
.
.
.
0000000 = FIFO0 Interrupt (C1FSTAT<0> set)

Note 1: These bits are only updated for enabled interrupts.

© 2014-2019 Microchip Technology Inc.

REGISTER 23-5: C1TREC: CAN TRANSMIT/RECEIVE ERROR COUNT REGISTER

Bit Range	Bit 31/23/15/7	Bit 30/22/14/6	Bit 29/21/13/5	Bit 28/20/12/4	Bit 27/19/11/3	Bit 26/18/10/2	Bit 25/17/9/1	Bit 24/16/8/0
31:24	U-0	U-0	U-0	U-0	U-0	U-0	U-0	U-0
	—	—	—	—	—	—	—	—
23:16	U-0	U-0	R-0	R-0	R-0	R-0	R-0	R-0
	—	—	TXBO	TXBP	RXBP	TXWARN	RXWARN	EWARN
15:8	R-0	R-0	R-0	R-0	R-0	R-0	R-0	R-0
	TERRCNT<7:0>							
7:0	R-0	R-0	R-0	R-0	R-0	R-0	R-0	R-0
	RERRCNT<7:0>							

Legend:			
R = Readable bit	W = Writable bit	U = Unimplemented bit, read as ‘0’	
-n = Value at POR	‘1’ = Bit is set	‘0’ = Bit is cleared	x = Bit is unknown

bit 31-22 **Unimplemented:** Read as ‘0’
bit 21 **TXBO:** Transmitter in Error State Bus OFF (TERRCNT ≥ 256)
bit 20 **TXBP:** Transmitter in Error State Bus Passive (TERRCNT ≥ 128)
bit 19 **RXBP:** Receiver in Error State Bus Passive (RERRCNT ≥ 128)
bit 18 **TXWARN:** Transmitter in Error State Warning (128 > TERRCNT ≥ 96)
bit 17 **RXWARN:** Receiver in Error State Warning (128 > RERRCNT ≥ 96)
bit 16 **EWARN:** Transmitter or Receiver is in Error State Warning
bit 15-8 **TERRCNT<7:0>:** Transmit Error Counter
bit 7-0 **RERRCNT<7:0>:** Receive Error Counter

REGISTER 23-6: C1FSTAT: CAN FIFO STATUS REGISTER

Bit Range	Bit 31/23/15/7	Bit 30/22/14/6	Bit 29/21/13/5	Bit 28/20/12/4	Bit 27/19/11/3	Bit 26/18/10/2	Bit 25/17/9/1	Bit 24/16/8/0
31:24	U-0	U-0	U-0	U-0	U-0	U-0	U-0	U-0
	—	—	—	—	—	—	—	—
23:16	U-0	U-0	U-0	U-0	U-0	U-0	U-0	U-0
	—	—	—	—	—	—	—	—
15:8	R-0	R-0	R-0	R-0	R-0	R-0	R-0	R-0
	FIFOIP15	FIFOIP14	FIFOIP13	FIFOIP12	FIFOIP11	FIFOIP10	FIFOIP9	FIFOIP8
7:0	R-0	R-0	R-0	R-0	R-0	R-0	R-0	R-0
	FIFOIP7	FIFOIP6	FIFOIP5	FIFOIP4	FIFOIP3	FIFOIP2	FIFOIP1	FIFOIP0

Legend:			
R = Readable bit	W = Writable bit	U = Unimplemented bit, read as ‘0’	
-n = Value at POR	‘1’ = Bit is set	‘0’ = Bit is cleared	x = Bit is unknown

bit 31-16 **Unimplemented:** Read as ‘0’
bit 15-0 **FIFOIP<15:0>:** FIFOx Interrupt Pending bits
1 = One or more enabled FIFO interrupts are pending
0 = No FIFO interrupts are pending

REGISTER 23-7: C1RXOVF: CAN RECEIVE FIFO OVERFLOW STATUS REGISTER

Bit Range	Bit 31/23/15/7	Bit 30/22/14/6	Bit 29/21/13/5	Bit 28/20/12/4	Bit 27/19/11/3	Bit 26/18/10/2	Bit 25/17/9/1	Bit 24/16/8/0
31:24	U-0	U-0	U-0	U-0	U-0	U-0	U-0	U-0
	—	—	—	—	—	—	—	—
23:16	U-0	U-0	U-0	U-0	U-0	U-0	U-0	U-0
	—	—	—	—	—	—	—	—
15:8	R-0	R-0	R-0	R-0	R-0	R-0	R-0	R-0
	RXOVF15	RXOVF14	RXOVF13	RXOVF12	RXOVF11	RXOVF10	RXOVF9	RXOVF8
7:0	R-0	R-0	R-0	R-0	R-0	R-0	R-0	R-0
	RXOVF7	RXOVF6	RXOVF5	RXOVF4	RXOVF3	RXOVF2	RXOVF1	RXOVF0

Legend:			
R = Readable bit	W = Writable bit	U = Unimplemented bit, read as ‘0’	
-n = Value at POR	‘1’ = Bit is set	‘0’ = Bit is cleared	x = Bit is unknown

bit 31-16 **Unimplemented:** Read as ‘0’

bit 15-0 **RXOVF<15:0>:** FIFOx Receive Overflow Interrupt Pending bit
1 = FIFO has overflowed
0 = FIFO has not overflowed

REGISTER 23-8: C1TMR: CAN TIMER REGISTER

Bit Range	Bit 31/23/15/7	Bit 30/22/14/6	Bit 29/21/13/5	Bit 28/20/12/4	Bit 27/19/11/3	Bit 26/18/10/2	Bit 25/17/9/1	Bit 24/16/8/0
31:24	R/W-0	R/W-0	R/W-0	R/W-0	R/W-0	R/W-0	R/W-0	R/W-0
	CANTS<15:8>							
23:16	R/W-0	R/W-0	R/W-0	R/W-0	R/W-0	R/W-0	R/W-0	R/W-0
	CANTS<7:0>							
15:8	R/W-0	R/W-0	R/W-0	R/W-0	R/W-0	R/W-0	R/W-0	R/W-0
	CANTSPRE<15:8>							
7:0	R/W-0	R/W-0	R/W-0	R/W-0	R/W-0	R/W-0	R/W-0	R/W-0
	CANTSPRE<7:0>							

Legend:			
R = Readable bit	W = Writable bit	U = Unimplemented bit, read as ‘0’	
-n = Value at POR	‘1’ = Bit is set	‘0’ = Bit is cleared	x = Bit is unknown

bit 31-0 **CANTS<15:0>:** CAN Time Stamp Timer bits
This is a free-running timer that increments every CANTSPRE system clocks when the CANCAP bit (C1CON<20>) is set.

bit 15-0 **CANTSPRE<15:0>:** CAN Time Stamp Timer Prescaler bits
1111 1111 1111 1111 = CAN time stamp timer (CANTS) increments every 65,535 system clocks
.
.
.
0000 0000 0000 0000 = CAN time stamp timer (CANTS) increments every system clock

Note 1: C1TMR will be paused when CANCAP = 0.
2: The C1TMR prescaler count will be reset on any write to C1TMR (CANTSPRE will be unaffected).

© 2014-2019 Microchip Technology Inc.

REGISTER 23-9: C1RXMn: CAN ACCEPTANCE FILTER MASK 'n' REGISTER (n = 0, 1, 2 OR 3)

Bit Range	Bit 31/23/15/7	Bit 30/22/14/6	Bit 29/21/13/5	Bit 28/20/12/4	Bit 27/19/11/3	Bit 26/18/10/2	Bit 25/17/9/1	Bit 24/16/8/0
31:24	R/W-0	R/W-0	R/W-0	R/W-0	R/W-0	R/W-0	R/W-0	R/W-0
	SID<10:3>							
23:16	R/W-0	R/W-0	R/W-0	U-0	R/W-0	U-0	R/W-0	R/W-0
	SID<2:0>			—	MIDE	—	EID<17:16>	
15:8	R/W-0	R/W-0	R/W-0	R/W-0	R/W-0	R/W-0	R/W-0	R/W-0
	EID<15:8>							
7:0	R/W-0	R/W-0	R/W-0	R/W-0	R/W-0	R/W-0	R/W-0	R/W-0
	EID<7:0>							

Legend:			
R = Readable bit	W = Writable bit	U = Unimplemented bit, read as '0'	
-n = Value at POR	'1' = Bit is set	'0' = Bit is cleared	x = Bit is unknown

bit 31-21 **SID<10:0>:** Standard Identifier bits
`1` = Include the SIDx bit in filter comparison
`0` = The SIDx bit is a 'don't care' in filter operation

bit 20 **Unimplemented:** Read as '`0`'

bit 19 **MIDE:** Identifier Receive Mode bit
`1` = Match only message types (standard/extended address) that correspond to the EXID bit in filter
`0` = Match either standard or extended address message if filters match (that is, if (Filter SID) = (Message SID) or if (FILTER SID/EID) = (Message SID/EID))

bit 18 **Unimplemented:** Read as '`0`'

bit 17-0 **EID<17:0>:** Extended Identifier bits
`1` = Include the EIDx bit in filter comparison
`0` = The EIDx bit is a 'don't care' in filter operation

Note: This register can only be modified when the CAN module is in Configuration mode (OPMOD<2:0> (C1CON<23:21>) = `100`).

REGISTER 23-10: C1FLTCON0: CAN FILTER CONTROL REGISTER 0

Bit Range	Bit 31/23/15/7	Bit 30/22/14/6	Bit 29/21/13/5	Bit 28/20/12/4	Bit 27/19/11/3	Bit 26/18/10/2	Bit 25/17/9/1	Bit 24/16/8/0
31:24	R/W-0	R/W-0	R/W-0	R/W-0	R/W-0	R/W-0	R/W-0	R/W-0
	FLTEN3	MSEL3<1:0>		FSEL3<4:0>				
23:16	R/W-0	R/W-0	R/W-0	R/W-0	R/W-0	R/W-0	R/W-0	R/W-0
	FLTEN2	MSEL2<1:0>		FSEL2<4:0>				
15:8	R/W-0	R/W-0	R/W-0	R/W-0	R/W-0	R/W-0	R/W-0	R/W-0
	FLTEN1	MSEL1<1:0>		FSEL1<4:0>				
7:0	R/W-0	R/W-0	R/W-0	R/W-0	R/W-0	R/W-0	R/W-0	R/W-0
	FLTEN0	MSEL0<1:0>		FSEL0<4:0>				

Legend:			
R = Readable bit	W = Writable bit	U = Unimplemented bit, read as ‘0’	
-n = Value at POR	‘1’ = Bit is set	‘0’ = Bit is cleared	x = Bit is unknown

bit 31 **FLTEN3:** Filter 3 Enable bit
`1` = Filter is enabled
`0` = Filter is disabled

bit 30-29 **MSEL3<1:0>:** Filter 3 Mask Select bits
`11` = Acceptance Mask 3 selected
`10` = Acceptance Mask 2 selected
`01` = Acceptance Mask 1 selected
`00` = Acceptance Mask 0 selected

bit 28-24 **FSEL3<4:0>:** FIFO Selection bits
`11111` = Reserved
.
.
.
`10000` = Reserved
`01111` = Message matching filter is stored in FIFO buffer 15
.
.
.
`00000` = Message matching filter is stored in FIFO buffer 0

bit 23 **FLTEN2:** Filter 2 Enable bit
`1` = Filter is enabled
`0` = Filter is disabled

bit 22-21 **MSEL2<1:0>:** Filter 2 Mask Select bits
`11` = Acceptance Mask 3 selected
`10` = Acceptance Mask 2 selected
`01` = Acceptance Mask 1 selected
`00` = Acceptance Mask 0 selected

Note: The bits in this register can only be modified if the corresponding filter enable (FLTENn) bit is ‘`0`’.

© 2014-2019 Microchip Technology Inc.

REGISTER 23-10: C1FLTCON0: CAN FILTER CONTROL REGISTER 0 (CONTINUED)

bit 20-16 **FSEL2<4:0>:** FIFO Selection bits
11111 = Reserved
.
.
.
10000 = Reserved
01111 = Message matching filter is stored in FIFO buffer 15
.
.
.
00000 = Message matching filter is stored in FIFO buffer 0

bit 15 **FLTEN1:** Filter 1 Enable bit
1 = Filter is enabled
0 = Filter is disabled

bit 14-13 **MSEL1<1:0>:** Filter 1 Mask Select bits
11 = Acceptance Mask 3 selected
10 = Acceptance Mask 2 selected
01 = Acceptance Mask 1 selected
00 = Acceptance Mask 0 selected

bit 12-8 **FSEL1<4:0>:** FIFO Selection bits
11111 = Reserved
.
.
.
10000 = Reserved
01111 = Message matching filter is stored in FIFO buffer 15
.
.
.
00000 = Message matching filter is stored in FIFO buffer 0

bit 7 **FLTEN0:** Filter 0 Enable bit
1 = Filter is enabled
0 = Filter is disabled

bit 6-5 **MSEL0<1:0>:** Filter 0 Mask Select bits
11 = Acceptance Mask 3 selected
10 = Acceptance Mask 2 selected
01 = Acceptance Mask 1 selected
00 = Acceptance Mask 0 selected

bit 4-0 **FSEL0<4:0>:** FIFO Selection bits
11111 = Reserved
.
.
.
10000 = Reserved
01111 = Message matching filter is stored in FIFO buffer 15
.
.
.
00000 = Message matching filter is stored in FIFO buffer 0

Note: The bits in this register can only be modified if the corresponding filter enable (FLTENn) bit is '0'.

REGISTER 23-11: C1FLTCON1: CAN FILTER CONTROL REGISTER 1

Bit Range	Bit 31/23/15/7	Bit 30/22/14/6	Bit 29/21/13/5	Bit 28/20/12/4	Bit 27/19/11/3	Bit 26/18/10/2	Bit 25/17/9/1	Bit 24/16/8/0
31:24	R/W-0	R/W-0	R/W-0	R/W-0	R/W-0	R/W-0	R/W-0	R/W-0
	FLTEN7	MSEL7<1:0>		FSEL7<4:0>				
23:16	R/W-0	R/W-0	R/W-0	R/W-0	R/W-0	R/W-0	R/W-0	R/W-0
	FLTEN6	MSEL6<1:0>		FSEL6<4:0>				
15:8	R/W-0	R/W-0	R/W-0	R/W-0	R/W-0	R/W-0	R/W-0	R/W-0
	FLTEN5	MSEL5<1:0>		FSEL5<4:0>				
7:0	R/W-0	R/W-0	R/W-0	R/W-0	R/W-0	R/W-0	R/W-0	R/W-0
	FLTEN4	MSEL4<1:0>		FSEL4<4:0>				

Legend:			
R = Readable bit	W = Writable bit	U = Unimplemented bit, read as ‘0’	
-n = Value at POR	‘1’ = Bit is set	‘0’ = Bit is cleared	x = Bit is unknown

bit 31 **FLTEN7:** Filter 7 Enable bit
`1` = Filter is enabled
`0` = Filter is disabled

bit 30-29 **MSEL7<1:0>:** Filter 7 Mask Select bits
`11` = Acceptance Mask 3 selected
`10` = Acceptance Mask 2 selected
`01` = Acceptance Mask 1 selected
`00` = Acceptance Mask 0 selected

bit 28-24 **FSEL7<4:0>:** FIFO Selection bits
`11111` = Reserved
.
.
.
`10000` = Reserved
`01111` = Message matching filter is stored in FIFO buffer 15
.
.
.
`00000` = Message matching filter is stored in FIFO buffer 0

bit 23 **FLTEN6:** Filter 6 Enable bit
`1` = Filter is enabled
`0` = Filter is disabled

bit 22-21 **MSEL6<1:0>:** Filter 6 Mask Select bits
`11` = Acceptance Mask 3 selected
`10` = Acceptance Mask 2 selected
`01` = Acceptance Mask 1 selected
`00` = Acceptance Mask 0 selected

Note: The bits in this register can only be modified if the corresponding filter enable (FLTENn) bit is ‘`0`’.

© 2014-2019 Microchip Technology Inc.

REGISTER 23-11: C1FLTCON1: CAN FILTER CONTROL REGISTER 1 (CONTINUED)

bit 20-16 **FSEL6<4:0>:** FIFO Selection bits
11111 = Reserved
.
.
.
10000 = Reserved
01111 = Message matching filter is stored in FIFO buffer 15
.
.
.
00000 = Message matching filter is stored in FIFO buffer 0

bit 15 **FLTEN5:** Filter 17 Enable bit
1 = Filter is enabled
0 = Filter is disabled

bit 14-13 **MSEL5<1:0>:** Filter 5 Mask Select bits
11 = Acceptance Mask 3 selected
10 = Acceptance Mask 2 selected
01 = Acceptance Mask 1 selected
00 = Acceptance Mask 0 selected

bit 12-8 **FSEL5<4:0>:** FIFO Selection bits
11111 = Reserved
.
.
.
10000 = Reserved
01111 = Message matching filter is stored in FIFO buffer 15
.
.
.
00000 = Message matching filter is stored in FIFO buffer 0

bit 7 **FLTEN4:** Filter 4 Enable bit
1 = Filter is enabled
0 = Filter is disabled

bit 6-5 **MSEL4<1:0>:** Filter 4 Mask Select bits
11 = Acceptance Mask 3 selected
10 = Acceptance Mask 2 selected
01 = Acceptance Mask 1 selected
00 = Acceptance Mask 0 selected

bit 4-0 **FSEL4<4:0>:** FIFO Selection bits
11111 = Reserved
.
.
.
10000 = Reserved
01111 = Message matching filter is stored in FIFO buffer 15
.
.
.
00000 = Message matching filter is stored in FIFO buffer 0

Note: The bits in this register can only be modified if the corresponding filter enable (FLTENn) bit is '0'.

REGISTER 23-12: C1FLTCON2: CAN FILTER CONTROL REGISTER 2

Bit Range	Bit 31/23/15/7	Bit 30/22/14/6	Bit 29/21/13/5	Bit 28/20/12/4	Bit 27/19/11/3	Bit 26/18/10/2	Bit 25/17/9/1	Bit 24/16/8/0
31:24	R/W-0	R/W-0	R/W-0	R/W-0	R/W-0	R/W-0	R/W-0	R/W-0
	FLTEN11	MSEL11<1:0>		FSEL11<4:0>				
23:16	R/W-0	R/W-0	R/W-0	R/W-0	R/W-0	R/W-0	R/W-0	R/W-0
	FLTEN10	MSEL10<1:0>		FSEL10<4:0>				
15:8	R/W-0	R/W-0	R/W-0	R/W-0	R/W-0	R/W-0	R/W-0	R/W-0
	FLTEN9	MSEL9<1:0>		FSEL9<4:0>				
7:0	R/W-0	R/W-0	R/W-0	R/W-0	R/W-0	R/W-0	R/W-0	R/W-0
	FLTEN8	MSEL8<1:0>		FSEL8<4:0>				

Legend:			
R = Readable bit	W = Writable bit	U = Unimplemented bit, read as ‘0’	
-n = Value at POR	‘1’ = Bit is set	‘0’ = Bit is cleared	x = Bit is unknown

bit 31 **FLTEN11:** Filter 11 Enable bit
`1` = Filter is enabled
`0` = Filter is disabled

bit 30-29 **MSEL11<1:0>:** Filter 11 Mask Select bits
`11` = Acceptance Mask 3 selected
`10` = Acceptance Mask 2 selected
`01` = Acceptance Mask 1 selected
`00` = Acceptance Mask 0 selected

bit 28-24 **FSEL11<4:0>:** FIFO Selection bits
`11111` = Reserved
.
.
.
`10000` = Reserved
`01111` = Message matching filter is stored in FIFO buffer 15
.
.
.
`00000` = Message matching filter is stored in FIFO buffer 0

bit 23 **FLTEN10:** Filter 10 Enable bit
`1` = Filter is enabled
`0` = Filter is disabled

bit 22-21 **MSEL10<1:0>:** Filter 10 Mask Select bits
`11` = Acceptance Mask 3 selected
`10` = Acceptance Mask 2 selected
`01` = Acceptance Mask 1 selected
`00` = Acceptance Mask 0 selected

Note: The bits in this register can only be modified if the corresponding filter enable (FLTENn) bit is ‘`0`’.

© 2014-2019 Microchip Technology Inc.

REGISTER 23-12: C1FLTCON2: CAN FILTER CONTROL REGISTER 2 (CONTINUED)

bit 20-16 **FSEL10<4:0>:** FIFO Selection bits
11111 = Reserved
.
.
.
10000 = Reserved
01111 = Message matching filter is stored in FIFO buffer 15
.
.
.
00000 = Message matching filter is stored in FIFO buffer 0

bit 15 **FLTEN9:** Filter 9 Enable bit
1 = Filter is enabled
0 = Filter is disabled

bit 14-13 **MSEL9<1:0>:** Filter 9 Mask Select bits
11 = Acceptance Mask 3 selected
10 = Acceptance Mask 2 selected
01 = Acceptance Mask 1 selected
00 = Acceptance Mask 0 selected

bit 12-8 **FSEL9<4:0>:** FIFO Selection bits
11111 = Reserved
.
.
.
10000 = Reserved
01111 = Message matching filter is stored in FIFO buffer 15
.
.
.
00000 = Message matching filter is stored in FIFO buffer 0

bit 7 **FLTEN8:** Filter 8 Enable bit
1 = Filter is enabled
0 = Filter is disabled

bit 6-5 **MSEL8<1:0>:** Filter 8 Mask Select bits
11 = Acceptance Mask 3 selected
10 = Acceptance Mask 2 selected
01 = Acceptance Mask 1 selected
00 = Acceptance Mask 0 selected

bit 4-0 **FSEL8<4:0>:** FIFO Selection bits
11111 = Reserved
.
.
.
10000 = Reserved
01111 = Message matching filter is stored in FIFO buffer 15
.
.
.
00000 = Message matching filter is stored in FIFO buffer 0

Note: The bits in this register can only be modified if the corresponding filter enable (FLTENn) bit is '0'.

REGISTER 23-13: C1FLTCON3: CAN FILTER CONTROL REGISTER 3

Bit Range	Bit 31/23/15/7	Bit 30/22/14/6	Bit 29/21/13/5	Bit 28/20/12/4	Bit 27/19/11/3	Bit 26/18/10/2	Bit 25/17/9/1	Bit 24/16/8/0
31:24	R/W-0	R/W-0	R/W-0	R/W-0	R/W-0	R/W-0	R/W-0	R/W-0
	FLTEN15	MSEL15<1:0>		FSEL15<4:0>				
23:16	R/W-0	R/W-0	R/W-0	R/W-0	R/W-0	R/W-0	R/W-0	R/W-0
	FLTEN14	MSEL14<1:0>		FSEL14<4:0>				
15:8	R/W-0	R/W-0	R/W-0	R/W-0	R/W-0	R/W-0	R/W-0	R/W-0
	FLTEN13	MSEL13<1:0>		FSEL13<4:0>				
7:0	R/W-0	R/W-0	R/W-0	R/W-0	R/W-0	R/W-0	R/W-0	R/W-0
	FLTEN12	MSEL12<1:0>		FSEL12<4:0>				

Legend:			
R = Readable bit	W = Writable bit	U = Unimplemented bit, read as ‘0’	
-n = Value at POR	‘1’ = Bit is set	‘0’ = Bit is cleared	x = Bit is unknown

bit 31 **FLTEN15:** Filter 15 Enable bit
`1` = Filter is enabled
`0` = Filter is disabled

bit 30-29 **MSEL15<1:0>:** Filter 15 Mask Select bits
`11` = Acceptance Mask 3 selected
`10` = Acceptance Mask 2 selected
`01` = Acceptance Mask 1 selected
`00` = Acceptance Mask 0 selected

bit 28-24 **FSEL15<4:0>:** FIFO Selection bits
`11111` = Reserved
.
.
.
`10000` = Reserved
`01111` = Message matching filter is stored in FIFO buffer 15
.
.
.
`00000` = Message matching filter is stored in FIFO buffer 0

bit 23 **FLTEN14:** Filter 14 Enable bit
`1` = Filter is enabled
`0` = Filter is disabled

bit 22-21 **MSEL14<1:0>:** Filter 14 Mask Select bits
`11` = Acceptance Mask 3 selected
`10` = Acceptance Mask 2 selected
`01` = Acceptance Mask 1 selected
`00` = Acceptance Mask 0 selected

Note: The bits in this register can only be modified if the corresponding filter enable (FLTENn) bit is ‘`0`’.

© 2014-2019 Microchip Technology Inc.

REGISTER 23-13: C1FLTCON3: CAN FILTER CONTROL REGISTER 3 (CONTINUED)

bit 20-16 **FSEL14<4:0>:** FIFO Selection bits
11111 = Reserved
.
.
.
10000 = Reserved
01111 = Message matching filter is stored in FIFO buffer 15
.
.
.
00000 = Message matching filter is stored in FIFO buffer 0

bit 15 **FLTEN13:** Filter 13 Enable bit
1 = Filter is enabled
0 = Filter is disabled

bit 14-13 **MSEL13<1:0>:** Filter 13 Mask Select bits
11 = Acceptance Mask 3 selected
10 = Acceptance Mask 2 selected
01 = Acceptance Mask 1 selected
00 = Acceptance Mask 0 selected

bit 12-8 **FSEL13<4:0>:** FIFO Selection bits
11111 = Reserved
.
.
.
10000 = Reserved
01111 = Message matching filter is stored in FIFO buffer 15
.
.
.
00000 = Message matching filter is stored in FIFO buffer 0

bit 7 **FLTEN12:** Filter 12 Enable bit
1 = Filter is enabled
0 = Filter is disabled

bit 6-5 **MSEL12<1:0>:** Filter 12 Mask Select bits
11 = Acceptance Mask 3 selected
10 = Acceptance Mask 2 selected
01 = Acceptance Mask 1 selected
00 = Acceptance Mask 0 selected

bit 4-0 **FSEL12<4:0>:** FIFO Selection bits
11111 = Reserved
.
.
.
10000 = Reserved
01111 = Message matching filter is stored in FIFO buffer 15
.
.
.
00000 = Message matching filter is stored in FIFO buffer 0

Note: The bits in this register can only be modified if the corresponding filter enable (FLTENn) bit is '0'.

REGISTER 23-14: C1RXFn: CAN ACCEPTANCE FILTER 'n' REGISTER ('n' = 0 THROUGH 15)

Bit Range	Bit 31/23/15/7	Bit 30/22/14/6	Bit 29/21/13/5	Bit 28/20/12/4	Bit 27/19/11/3	Bit 26/18/10/2	Bit 25/17/9/1	Bit 24/16/8/0
31:24	R/W-x	R/W-x	R/W-x	R/W-x	R/W-x	R/W-x	R/W-x	R/W-x
	SID<10:3>							
23:16	R/W-x	R/W-x	R/W-x	U-0	R/W-0	U-0	R/W-x	R/W-x
	SID<2:0>			—	EXID	—	EID<17:16>	
15:8	R/W-x	R/W-x	R/W-x	R/W-x	R/W-x	R/W-x	R/W-x	R/W-x
	EID<15:8>							
7:0	R/W-x	R/W-x	R/W-x	R/W-x	R/W-x	R/W-x	R/W-x	R/W-x
	EID<7:0>							

Legend:			
R = Readable bit	W = Writable bit	U = Unimplemented bit, read as '0'	
-n = Value at POR	'1' = Bit is set	'0' = Bit is cleared	x = Bit is unknown

bit 31-21 **SID<10:0>:** Standard Identifier bits
1 = Message address bit SIDx must be '1' to match filter
0 = Message address bit SIDx must be '0' to match filter

bit 20 **Unimplemented:** Read as '0'

bit 19 **EXID:** Extended Identifier Enable bits
1 = Match only messages with extended identifier addresses
0 = Match only messages with standard identifier addresses

bit 18 **Unimplemented:** Read as '0'

bit 17-0 **EID<17:0>:** Extended Identifier bits
1 = Message address bit EIDx must be '1' to match filter
0 = Message address bit EIDx must be '0' to match filter

Note: This register can only be modified when the filter is disabled (FLTENn = 0).

© 2014-2019 Microchip Technology Inc.

REGISTER 23-15: C1FIFOBA: CAN MESSAGE BUFFER BASE ADDRESS REGISTER

Bit Range	Bit 31/23/15/7	Bit 30/22/14/6	Bit 29/21/13/5	Bit 28/20/12/4	Bit 27/19/11/3	Bit 26/18/10/2	Bit 25/17/9/1	Bit 24/16/8/0
31:24	R/W-0	R/W-0	R/W-0	R/W-0	R/W-0	R/W-0	R/W-0	R/W-0
	C1FIFOBA<31:24>							
23:16	R/W-0	R/W-0	R/W-0	R/W-0	R/W-0	R/W-0	R/W-0	R/W-0
	C1FIFOBA<23:16>							
15:8	R/W-0	R/W-0	R/W-0	R/W-0	R/W-0	R/W-0	R/W-0	R/W-0
	C1FIFOBA<15:8>							
7:0	R/W-0	R/W-0	R/W-0	R/W-0	R/W-0	R/W-0	R-0(1)	R-0(1)
	C1FIFOBA<7:0>							

Legend:			
R = Readable bit	W = Writable bit	U = Unimplemented bit, read as ‘0’	
-n = Value at POR	‘1’ = Bit is set	‘0’ = Bit is cleared	x = Bit is unknown

bit 31-0 **C1FIFOBA<31:0>:** CAN FIFO Base Address bits

These bits define the base address of all message buffers. Individual message buffers are located based on the size of the previous message buffers. This address is a physical address. Bits <1:0> are read-only and read as ‘0’, forcing the messages to be 32-bit word-aligned in device RAM.

Note 1: This bit is unimplemented and will always read ‘0’, which forces word-alignment of messages.

Note: This register can only be modified when the CAN module is in Configuration mode (OPMOD<2:0> (C1CON<23:21>) = 100).

REGISTER 23-16: C1FIFOCONn: CAN FIFO CONTROL REGISTER 'n' ('n' = 0 THROUGH 15)

Bit Range	Bit 31/23/15/7	Bit 30/22/14/6	Bit 29/21/13/5	Bit 28/20/12/4	Bit 27/19/11/3	Bit 26/18/10/2	Bit 25/17/9/1	Bit 24/16/8/0
31:24	U-0	U-0	U-0	U-0	U-0	U-0	U-0	U-0
	—	—	—	—	—	—	—	—
23:16	U-0	U-0	U-0	R/W-0	R/W-0	R/W-0	R/W-0	R/W-0
	—	—	—	FSIZE<4:0>(1)				
15:8	U-0	S/HC-0	S/HC-0	R/W-0	U-0	U-0	U-0	U-0
	—	FRESET	UINC	DONLY(1)	—	—	—	—
7:0	R/W-0	R-0	R-0	R-0	R/W-0	R/W-0	R/W-0	R/W-0
	TXEN	TXABAT(2)	TXLARB(3)	TXERR(3)	TXREQ	RTREN	TXPR<1:0>	

Legend:			
R = Readable bit	W = Writable bit	U = Unimplemented bit, read as '0'	
-n = Value at POR	'1' = Bit is set	'0' = Bit is cleared	x = Bit is unknown

bit 31-21 **Unimplemented:** Read as '0'

bit 20-16 **FSIZE<4:0>:** FIFO Size bits(1)

11111 = Reserved
.
.
.
10000 = Reserved
01111 = FIFO is 16 messages deep
.
.
.
00000 = FIFO is 1 message deep

bit 15 **Unimplemented:** Read as '0'

bit 14 **FRESET:** FIFO Reset bits

1 = FIFO will be reset when bit is set, cleared by hardware when FIFO is reset. After setting, the user should poll whether this bit is clear before taking any action.
0 = No effect

bit 13 **UINC:** Increment Head/Tail bit

TXEN = 1: (FIFO configured as a Transmit FIFO)
When this bit is set the FIFO head will increment by a single message
TXEN = 0: (FIFO configured as a Receive FIFO)
When this bit is set the FIFO tail will increment by a single message

bit 12 **DONLY:** Store Message Data Only bit(1)

TXEN = 1: (FIFO configured as a Transmit FIFO)
This bit is not used and has no effect.
TXEN = 0: (FIFO configured as a Receive FIFO)
1 = Only data bytes will be stored in the FIFO
0 = Full message is stored, including identifier

bit 11-8 **Unimplemented:** Read as '0'

Note 1: These bits can only be modified when the CAN module is in Configuration mode (OPMOD<2:0> bits (C1CON<23:21>) = 100).

2: This bit is updated when a message completes (or aborts) or when the FIFO is reset.

3: This bit is reset on any read of this register or when the FIFO is reset.

© 2014-2019 Microchip Technology Inc.

REGISTER 23-16: C1FIFOCONn: CAN FIFO CONTROL REGISTER 'n' ('n' = 0 THROUGH 15)

bit 7 **TXEN:** TX/RX Buffer Selection bit
1 = FIFO is a Transmit FIFO
0 = FIFO is a Receive FIFO

bit 6 **TXABAT:** Message Aborted bit(2)
1 = Message was aborted
0 = Message completed successfully

bit 5 **TXLARB:** Message Lost Arbitration bit(3)
1 = Message lost arbitration while being sent
0 = Message did not lose arbitration while being sent

bit 4 **TXERR:** Error Detected During Transmission bit(3)
1 = A bus error occured while the message was being sent
0 = A bus error did not occur while the message was being sent

bit 3 **TXREQ:** Message Send Request
TXEN = 1: (FIFO configured as a Transmit FIFO)
Setting this bit to '1' requests sending a message.
The bit will automatically clear when all the messages queued in the FIFO are successfully sent.
Clearing the bit to '0' while set ('1') will request a message abort.
TXEN = 0: (FIFO configured as a receive FIFO)
This bit has no effect.

bit 2 **RTREN:** Auto RTR Enable bit
1 = When a remote transmit is received, TXREQ will be set
0 = When a remote transmit is received, TXREQ will be unaffected

bit 1-0 **TXPR<1:0>:** Message Transmit Priority bits
11 = Highest message priority
10 = High intermediate message priority
01 = Low intermediate message priority
00 = Lowest message priority

Note 1: These bits can only be modified when the CAN module is in Configuration mode (OPMOD<2:0> bits (C1CON<23:21>) = 100).
2: This bit is updated when a message completes (or aborts) or when the FIFO is reset.
3: This bit is reset on any read of this register or when the FIFO is reset.

REGISTER 23-17: C1FIFOINTn: CAN FIFO INTERRUPT REGISTER ‘n’ (‘n’ = 0 THROUGH 15)

Bit Range	Bit 31/23/15/7	Bit 30/22/14/6	Bit 29/21/13/5	Bit 28/20/12/4	Bit 27/19/11/3	Bit 26/18/10/2	Bit 25/17/9/1	Bit 24/16/8/0
31:24	U-0	U-0	U-0	U-0	U-0	R/W-0	R/W-0	R/W-0
	—	—	—	—	—	TXNFULLIE	TXHALFIE	TXEMPTYIE
23:16	U-0	U-0	U-0	U-0	R/W-0	R/W-0	R/W-0	R/W-0
	—	—	—	—	RXOVFLIE	RXFULLIE	RXHALFIE	RXNEMPTYIE
15:8	U-0	U-0	U-0	U-0	U-0	R-0	R-0	R-0
	—	—	—	—	—	TXNFULLIF(1)	TXHALFIF	TXEMPTYIF(1)
7:0	U-0	U-0	U-0	U-0	R/W-0	R-0	R-0	R-0
	—	—	—	—	RXOVFLIF	RXFULLIF(1)	RXHALFIF(1)	RXNEMPTYIF(1)

Legend:			
R = Readable bit	W = Writable bit	U = Unimplemented bit, read as ‘0’	
-n = Value at POR	‘1’ = Bit is set	‘0’ = Bit is cleared	x = Bit is unknown

bit 31-27 **Unimplemented:** Read as ‘0’

bit 26 **TXNFULLIE:** Transmit FIFO Not Full Interrupt Enable bit
1 = Interrupt enabled for FIFO not full
0 = Interrupt disabled for FIFO not full

bit 25 **TXHALFIE:** Transmit FIFO Half Full Interrupt Enable bit
1 = Interrupt enabled for FIFO half full
0 = Interrupt disabled for FIFO half full

bit 24 **TXEMPTYIE:** Transmit FIFO Empty Interrupt Enable bit
1 = Interrupt enabled for FIFO empty
0 = Interrupt disabled for FIFO empty

bit 23-20 **Unimplemented:** Read as ‘0’

bit 19 **RXOVFLIE:** Overflow Interrupt Enable bit
1 = Interrupt enabled for overflow event
0 = Interrupt disabled for overflow event

bit 18 **RXFULLIE:** Full Interrupt Enable bit
1 = Interrupt enabled for FIFO full
0 = Interrupt disabled for FIFO full

bit 17 **RXHALFIE:** FIFO Half Full Interrupt Enable bit
1 = Interrupt enabled for FIFO half full
0 = Interrupt disabled for FIFO half full

bit 16 **RXNEMPTYIE:** Empty Interrupt Enable bit
1 = Interrupt enabled for FIFO not empty
0 = Interrupt disabled for FIFO not empty

bit 15-11 **Unimplemented:** Read as ‘0’

bit 10 **TXNFULLIF:** Transmit FIFO Not Full Interrupt Flag bit(1)
TXEN = 1: (FIFO configured as a transmit buffer)
1 = FIFO is not full
0 = FIFO is full
TXEN = 0: (FIFO configured as a receive buffer)
Unused, reads ‘0’

Note 1: This bit is read-only and reflects the status of the FIFO.

© 2014-2019 Microchip Technology Inc.

REGISTER 23-17: C1FIFOINTn: CAN FIFO INTERRUPT REGISTER 'n' ('n' = 0 THROUGH 15)

bit 9 **TXHALFIF:** FIFO Transmit FIFO Half Empty Interrupt Flag bit(1)

TXEN = 1: (FIFO configured as a transmit buffer)
1 = FIFO is ≤ half full
0 = FIFO is > half full

TXEN = 0: (FIFO configured as a receive buffer)
Unused, reads '0'

bit 8 **TXEMPTYIF:** Transmit FIFO Empty Interrupt Flag bit(1)

TXEN = 1: (FIFO configured as a transmit buffer)
1 = FIFO is empty
0 = FIFO is not empty, at least 1 message queued to be transmitted

TXEN = 0: (FIFO configured as a receive buffer)
Unused, reads '0'

bit 7-4 **Unimplemented:** Read as '0'

bit 3 **RXOVFLIF:** Receive FIFO Overflow Interrupt Flag bit

TXEN = 1: (FIFO configured as a transmit buffer)
Unused, reads '0'

TXEN = 0: (FIFO configured as a receive buffer)
1 = Overflow event has occurred
0 = No overflow event occured

bit 2 **RXFULLIF:** Receive FIFO Full Interrupt Flag bit(1)

TXEN = 1: (FIFO configured as a transmit buffer)
Unused, reads '0'

TXEN = 0: (FIFO configured as a receive buffer)
1 = FIFO is full
0 = FIFO is not full

bit 1 **RXHALFIF:** Receive FIFO Half Full Interrupt Flag bit(1)

TXEN = 1: (FIFO configured as a transmit buffer)
Unused, reads '0'

TXEN = 0: (FIFO configured as a receive buffer)
1 = FIFO is ≥ half full
0 = FIFO is < half full

bit 0 **RXNEMPTYIF:** Receive Buffer Not Empty Interrupt Flag bit(1)

TXEN = 1: (FIFO configured as a transmit buffer)
Unused, reads '0'

TXEN = 0: (FIFO configured as a receive buffer)
1 = FIFO is not empty, has at least 1 message
0 = FIFO is empty

Note 1: This bit is read-only and reflects the status of the FIFO.

REGISTER 23-18: C1FIFOUAn: CAN FIFO USER ADDRESS REGISTER 'n' ('n' = 0 THROUGH 15)

Bit Range	Bit 31/23/15/7	Bit 30/22/14/6	Bit 29/21/13/5	Bit 28/20/12/4	Bit 27/19/11/3	Bit 26/18/10/2	Bit 25/17/9/1	Bit 24/16/8/0
31:24	R-x	R-x	R-x	R-x	R-x	R-x	R-x	R-x
	C1FIFOUAn<31:24>							
23:16	R-x	R-x	R-x	R-x	R-x	R-x	R-x	R-x
	C1FIFOUAn<23:16>							
15:8	R-x	R-x	R-x	R-x	R-x	R-x	R-x	R-x
	C1FIFOUAn<15:8>							
7:0	R-x	R-x	R-x	R-x	R-x	R-x	R-0(1)	R-0(1)
	C1FIFOUAn<7:0>							

Legend:			
R = Readable bit	W = Writable bit	U = Unimplemented bit, read as '0'	
-n = Value at POR	'1' = Bit is set	'0' = Bit is cleared	x = Bit is unknown

bit 31-0 **C1FIFOUAn<31:0>:** CAN FIFO User Address bits

TXEN = 1: (FIFO configured as a transmit buffer)

A read of this register will return the address where the next message is to be written (FIFO head).

TXEN = 0: (FIFO configured as a receive buffer)

A read of this register will return the address where the next message is to be read (FIFO tail).

Note 1: This bit will always read '0', which forces byte-alignment of messages.

Note: This register is not guaranteed to read correctly in Configuration mode, and should only be accessed when the module is not in Configuration mode.

REGISTER 23-19: C1FIFOCIn: CAN MODULE MESSAGE INDEX REGISTER 'n' ('n' = 0 THROUGH 15)

Bit Range	Bit 31/23/15/7	Bit 30/22/14/6	Bit 29/21/13/5	Bit 28/20/12/4	Bit 27/19/11/3	Bit 26/18/10/2	Bit 25/17/9/1	Bit 24/16/8/0
31:24	U-0	U-0	U-0	U-0	U-0	U-0	U-0	U-0
	—	—	—	—	—	—	—	—
23:16	U-0	U-0	U-0	U-0	U-0	U-0	U-0	U-0
	—	—	—	—	—	—	—	—
15:8	U-0	U-0	U-0	U-0	U-0	U-0	U-0	U-0
	—	—	—	—	—	—	—	—
7:0	U-0	U-0	U-0	R-0	R-0	R-0	R-0	R-0
	—	—	—	C1FIFOCIn<4:0>				

Legend:			
R = Readable bit	W = Writable bit	U = Unimplemented bit, read as '0'	
-n = Value at POR	'1' = Bit is set	'0' = Bit is cleared	x = Bit is unknown

bit 31-5 **Unimplemented:** Read as '0'

bit 4-0 **C1FIFOCIn<4:0>:** CAN Side FIFO Message Index bits

TXEN = 1: (FIFO configured as a transmit buffer)
A read of this register will return an index to the message that the FIFO will next attempt to transmit.

TXEN = 0: (FIFO configured as a receive buffer)
A read of this register will return an index to the message that the FIFO will use to save the next message.

© 2014-2019 Microchip Technology Inc.

24.0 COMPARATOR

Note: This data sheet summarizes the features of the PIC32MX1XX/2XX/5XX 64/100-pin family of devices. It is not intended to be a comprehensive reference source. To complement the information in this data sheet, refer to **Section 19. "Comparator"** (DS60001110) in the *"PIC32 Family Reference Manual"*, which is available from the Microchip web site (www.microchip.com/PIC32).

The Analog Comparator module contains three comparators that can be configured in a variety of ways.

The following are the key features of this module:

- Selectable inputs available include:
  - Analog inputs multiplexed with I/O pins
  - On-chip internal absolute voltage reference (IVREF)
  - Comparator voltage reference (CVREF)
- Outputs can be inverted
- Selectable interrupt generation

A block diagram of the comparator module is provided in Figure 24-1.

FIGURE 24-1: COMPARATOR BLOCK DIAGRAM

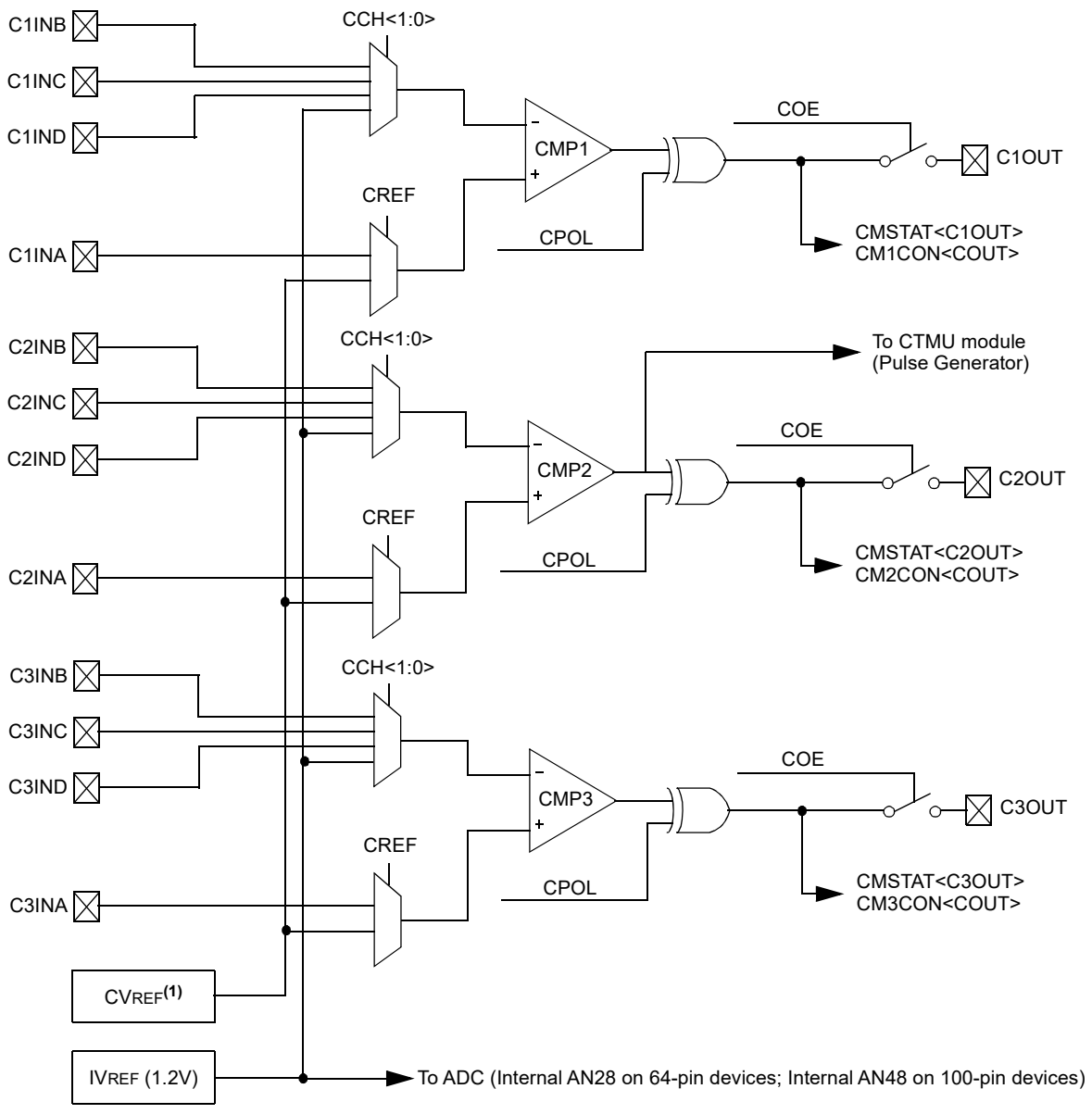

Note 1: Internally connected. See **Section 25.0 "Comparator Voltage Reference (CVREF)"** for more information.

24.1 Control Registers

TABLE 24-1: COMPARATOR REGISTER MAP

Virtual Address (BF80_#)	Register Name(1)	Bit Range	Bits																All Resets
			31/15	30/14	29/13	28/12	27/11	26/10	25/9	24/8	23/7	22/6	21/5	20/4	19/3	18/2	17/1	16/0	
A000	CM1CON	31:16	—	—	—	—	—	—	—	—	—	—	—	—	—	—	—	—	0000
		15:0	ON	COE	CPOL	—	—	—	—	COUT	EVPOL<1:0>		—	CREF	—	—	CCH<1:0>		E1C3
A010	CM2CON	31:16	—	—	—	—	—	—	—	—	—	—	—	—	—	—	—	—	0000
		15:0	ON	COE	CPOL	—	—	—	—	COUT	EVPOL<1:0>		—	CREF	—	—	CCH<1:0>		E1C3
A020	CM3CON	31:16	—	—	—	—	—	—	—	—	—	—	—	—	—	—	—	—	0000
		15:0	ON	COE	CPOL	—	—	—	—	COUT	EVPOL<1:0>		—	CREF	—	—	CCH<1:0>		E1C3
A060	CMSTAT	31:16	—	—	—	—	—	—	—	—	—	—	—	—	—	—	—	—	0000
		15:0	—	—	SIDL	—	—	—	—	—	—	—	—	—	—	C3OUT	C2OUT	C1OUT	0000

Legend: x = unknown value on Reset; — = unimplemented, read as ‘0’. Reset values are shown in hexadecimal.

Note 1: All registers in this table have corresponding CLR, SET and INV registers at their virtual addresses, plus offsets of 0x4, 0x8 and 0xC, respectively. See **Section 11.2 “CLR, SET, and INV Registers”** for more information.

© 2014-2019 Microchip Technology Inc.

REGISTER 24-1: CMxCON: COMPARATOR CONTROL REGISTER

Bit Range	Bit 31/23/15/7	Bit 30/22/14/6	Bit 29/21/13/5	Bit 28/20/12/4	Bit 27/19/11/3	Bit 26/18/10/2	Bit 25/17/9/1	Bit 24/16/8/0
31:24	U-0	U-0	U-0	U-0	U-0	U-0	U-0	U-0
	—	—	—	—	—	—	—	—
23:16	U-0	U-0	U-0	U-0	U-0	U-0	U-0	U-0
	—	—	—	—	—	—	—	—
15:8	R/W-0	R/W-0	R/W-0	U-0	U-0	U-0	U-0	R-0
	ON(1)	COE	CPOL(2)	—	—	—	—	COUT
7:0	R/W-1	R/W-1	U-0	R/W-0	U-0	U-0	R/W-1	R/W-1
	EVPOL<1:0>		—	CREF	—	—	CCH<1:0>	

Legend:			
R = Readable bit	W = Writable bit	U = Unimplemented bit, read as ‘0’	
-n = Value at POR	‘1’ = Bit is set	‘0’ = Bit is cleared	x = Bit is unknown

bit 31-16 **Unimplemented:** Read as ‘0’

bit 15 **ON:** Comparator ON bit(1)
- 1 = Module is enabled. Setting this bit does not affect the other bits in this register
- 0 = Module is disabled and does not consume current. Clearing this bit does not affect the other bits in this register

bit 14 **COE:** Comparator Output Enable bit
- 1 = Comparator output is driven on the output CxOUT pin
- 0 = Comparator output is not driven on the output CxOUT pin

bit 13 **CPOL:** Comparator Output Inversion bit(2)
- 1 = Output is inverted
- 0 = Output is not inverted

bit 12-9 **Unimplemented:** Read as ‘0’

bit 8 **COUT:** Comparator Output bit
- 1 = Output of the Comparator is a ‘1’
- 0 = Output of the Comparator is a ‘0’

bit 7-6 **EVPOL<1:0>:** Interrupt Event Polarity Select bits
- 11 = Comparator interrupt is generated on a low-to-high or high-to-low transition of the comparator output
- 10 = Comparator interrupt is generated on a high-to-low transition of the comparator output
- 01 = Comparator interrupt is generated on a low-to-high transition of the comparator output
- 00 = Comparator interrupt generation is disabled

bit 5 **Unimplemented:** Read as ‘0’

bit 4 **CREF:** Comparator Positive Input Configure bit
- 1 = Comparator non-inverting input is connected to the internal CVREF
- 0 = Comparator non-inverting input is connected to the CxINA pin

bit 3-2 **Unimplemented:** Read as ‘0’

bit 1-0 **CCH<1:0>:** Comparator Negative Input Select bits for Comparator
- 11 = Comparator inverting input is connected to the IVREF
- 10 = Comparator inverting input is connected to the CxIND pin
- 01 = Comparator inverting input is connected to the CxINC pin
- 00 = Comparator inverting input is connected to the CxINB pin

Note 1: When using the 1:1 PBCLK divisor, the user’s software should not read/write the peripheral’s SFRs in the SYSCLK cycle immediately following the instruction that clears the module’s ON bit.

2: Setting this bit will invert the signal to the comparator interrupt generator as well. This will result in an interrupt being generated on the opposite edge from the one selected by EVPOL<1:0>.

REGISTER 24-2: CMSTAT: COMPARATOR STATUS REGISTER

Bit Range	Bit 31/23/15/7	Bit 30/22/14/6	Bit 29/21/13/5	Bit 28/20/12/4	Bit 27/19/11/3	Bit 26/18/10/2	Bit 25/17/9/1	Bit 24/16/8/0
31:24	U-0	U-0	U-0	U-0	U-0	U-0	U-0	U-0
	—	—	—	—	—	—	—	—
23:16	U-0	U-0	U-0	U-0	U-0	U-0	U-0	U-0
	—	—	—	—	—	—	—	—
15:8	U-0	U-0	R/W-0	U-0	U-0	U-0	U-0	U-0
	—	—	SIDL	—	—	—	—	—
7:0	U-0	U-0	U-0	U-0	U-0	R-0	R-0	R-0
	—	—	—	—	—	C3OUT	C2OUT	C1OUT

Legend:			
R = Readable bit	W = Writable bit	U = Unimplemented bit, read as ‘0’	
-n = Value at POR	‘1’ = Bit is set	‘0’ = Bit is cleared	x = Bit is unknown

bit 31-14 **Unimplemented:** Read as ‘0’

bit 13 **SIDL:** Stop in IDLE Control bit
1 = All Comparator modules are disabled in IDLE mode
0 = All Comparator modules continue to operate in the IDLE mode

bit 12-3 **Unimplemented:** Read as ‘0’

bit 2 **C3OUT:** Comparator Output bit
1 = Output of Comparator 3 is a ‘1’
0 = Output of Comparator 3 is a ‘0’

bit 1 **C2OUT:** Comparator Output bit
1 = Output of Comparator 2 is a ‘1’
0 = Output of Comparator 2 is a ‘0’

bit 0 **C1OUT:** Comparator Output bit
1 = Output of Comparator 1 is a ‘1’
0 = Output of Comparator 1 is a ‘0’

© 2014-2019 Microchip Technology Inc.

25.0 COMPARATOR VOLTAGE REFERENCE (CVREF)

Note: This data sheet summarizes the features of the PIC32MX1XX/2XX/5XX 64/100-pin family of devices. It is not intended to be a comprehensive reference source. To complement the information in this data sheet, refer to **Section 20. "Comparator Voltage Reference (CVREF)"** (DS60001109) in the *"PIC32 Family Reference Manual"*, which is available from the Microchip web site (www.microchip.com/PIC32).

The CVREF module is a 16-tap, resistor ladder network that provides a selectable reference voltage. Although its primary purpose is to provide a reference for the analog comparators, it also may be used independently of them.

A block diagram of the module is illustrated in Figure 25-1. The resistor ladder is segmented to provide two ranges of voltage reference values and has a power-down function to conserve power when the reference is not being used. The module's supply reference can be provided from either device VDD/VSS or an external voltage reference. The CVREF output is available for the comparators and typically available for pin output.

The CVREF module has the following features:

- High and low range selection
- Sixteen output levels available for each range
- Internally connected to comparators to conserve device pins
- Output can be connected to a pin

FIGURE 25-1: COMPARATOR VOLTAGE REFERENCE BLOCK DIAGRAM

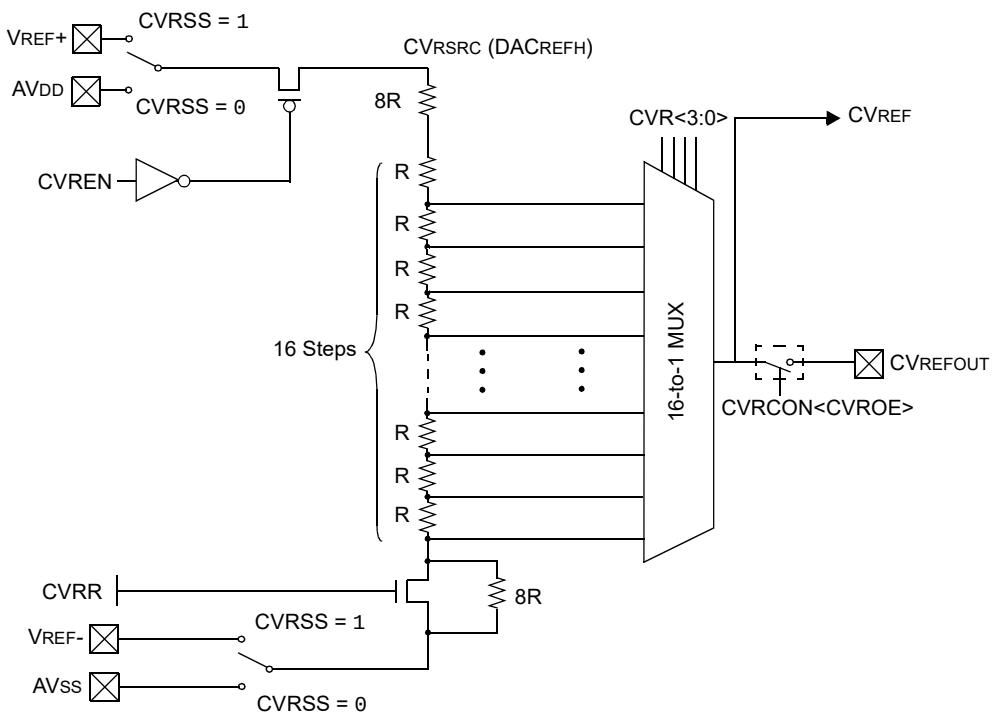

25.1 Control Registers

TABLE 25-1: COMPARATOR VOLTAGE REFERENCE REGISTER MAP

Virtual Address (BF80_#)	Register Name(1)	Bit Range	Bits																All Resets
			31/15	30/14	29/13	28/12	27/11	26/10	25/9	24/8	23/7	22/6	21/5	20/4	19/3	18/2	17/1	16/0	
9800	CVRCON	31:16	—	—	—	—	—	—	—	—	—	—	—	—	—	—	—	—	0000
		15:0	ON	—	—	—	—	—	—	—	—	CVROE	CVRR	CVRSS	CVR<3:0>				0000

Legend: x = unknown value on Reset; — = unimplemented, read as ‘0’. Reset values are shown in hexadecimal.

Note 1: The register in this table has corresponding CLR, SET and INV registers at their virtual addresses, plus offsets of 0x4, 0x8 and 0xC, respectively. See **Section 11.2 “CLR, SET, and INV Registers”** for more information.

© 2014-2019 Microchip Technology Inc.

REGISTER 25-1: CVRCON: COMPARATOR VOLTAGE REFERENCE CONTROL REGISTER

Bit Range	Bit 31/23/15/7	Bit 30/22/14/6	Bit 29/21/13/5	Bit 28/20/12/4	Bit 27/19/11/3	Bit 26/18/10/2	Bit 25/17/9/1	Bit 24/16/8/0
31:24	U-0	U-0	U-0	U-0	U-0	U-0	U-0	U-0
	—	—	—	—	—	—	—	—
23:16	U-0	U-0	U-0	U-0	U-0	U-0	U-0	U-0
	—	—	—	—	—	—	—	—
15:8	R/W-0	U-0	U-0	U-0	U-0	U-0	U-0	U-0
	ON(1)	—	—	—	—	—	—	—
7:0	U-0	R/W-0	R/W-0	R/W-0	R/W-0	R/W-0	R/W-0	R/W-0
	—	CVROE	CVRR	CVRSS	CVR<3:0>			

Legend:			
R = Readable bit	W = Writable bit	U = Unimplemented bit, read as ‘0’	
-n = Value at POR	‘1’ = Bit is set	‘0’ = Bit is cleared	x = Bit is unknown

bit 31-16 **Unimplemented:** Read as ‘0’

bit 15 **ON:** Comparator Voltage Reference On bit(1)
1 = Module is enabled
Setting this bit does not affect other bits in the register.
0 = Module is disabled and does not consume current
Clearing this bit does not affect the other bits in the register.

bit 14-7 **Unimplemented:** Read as ‘0’

bit 6 **CVROE:** CV_{REFOUT} Enable bit
1 = Voltage level is output on CV_{REFOUT} pin
0 = Voltage level is disconnected from CV_{REFOUT} pin

bit 5 **CVRR:** CV_{REF} Range Selection bit
1 = 0 to 0.625 CV_{RSRC}, with $CV_{RSRC}/24$ step size
0 = 0.25 CV_{RSRC} to 0.719 CV_{RSRC}, with $CV_{RSRC}/32$ step size

bit 4 **CVRSS:** CV_{REF} Source Selection bit
1 = Comparator voltage reference source, $CV_{RSRC} = (V_{REF}+) – (V_{REF}-)$
0 = Comparator voltage reference source, $CV_{RSRC} = AV_{DD} – AV_{SS}$

bit 3-0 **CVR<3:0>:** CV_{REF} Value Selection $0 \leq CVR<3:0> \leq 15$ bits
When CVRR = 1:
$CV_{REF} = (CVR<3:0>/24) \bullet (CV_{RSRC})$
When CVRR = 0:
$CV_{REF} = 1/4 \bullet (CV_{RSRC}) + (CVR<3:0>/32) \bullet (CV_{RSRC})$

Note 1: When using 1:1 PBCLK divisor, the user’s software should not read/write the peripheral’s SFRs in the SYSCLK cycle immediately following the instruction that clears the module’s ON bit.

NOTES:

© 2014-2019 Microchip Technology Inc.

26.0 CHARGE TIME MEASUREMENT UNIT (CTMU)

Note: This data sheet summarizes the features of the PIC32MX1XX/2XX/5XX 64/100-pin family of devices. It is not intended to be a comprehensive reference source. To complement the information in this data sheet, refer to **Section 37. "Charge Time Measurement Unit (CTMU)"** (DS60001167) in the *"PIC32 Family Reference Manual"*, which is available from the Microchip web site (www.microchip.com).

The Charge Time Measurement Unit (CTMU) is a flexible analog module that has a configurable current source with a digital configuration circuit built around it. The CTMU can be used for differential time measurement between pulse sources and can be used for generating an asynchronous pulse. By working with other on-chip analog modules, the CTMU can be used for high resolution time measurement, measure capacitance, measure relative changes in capacitance or generate output pulses with a specific time delay. The CTMU is ideal for interfacing with capacitive-based sensors.

The CTMU module includes the following key features:

- Up to 13 channels available for capacitive or time measurement input
- On-chip precision current source
- 16-edge input trigger sources
- Selection of edge or level-sensitive inputs
- Polarity control for each edge source
- Control of edge sequence
- Control of response to edges
- High precision time measurement
- Time delay of external or internal signal asynchronous to system clock
- Integrated temperature sensing diode
- Control of current source during auto-sampling
- Four current source ranges
- Time measurement resolution of one nanosecond

A block diagram of the CTMU is shown in Figure 26-1.

FIGURE 26-1: CTMU BLOCK DIAGRAM

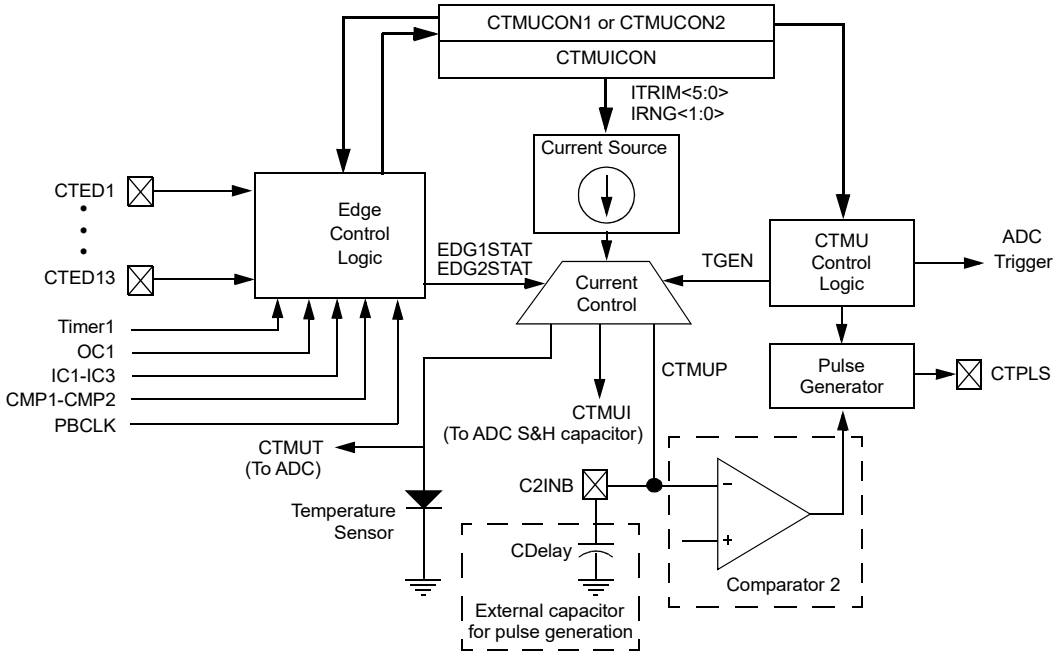

Current Control Selection	TGEN	EDG1STAT, EDG2STAT
CTMUT	0	EDG1STAT = EDG2STAT
CTMUI	0	EDG1STAT ≠ EDG2STAT
CTMUP	1	EDG1STAT ≠ EDG2STAT
No Connect	1	EDG1STAT = EDG2STAT

26.1 Control Registers

TABLE 26-1: CTMU REGISTER MAP

Virtual Address (BF80_#)	Register Name(1)	Bit Range	Bits																All Resets
			31/15	30/14	29/13	28/12	27/11	26/10	25/9	24/8	23/7	22/6	21/5	20/4	19/3	18/2	17/1	16/0	
A200	CTMUCON	31:16	EDG1MOD	EDG1POL	EDG1SEL<3:0>				EDG2STAT	EDG1STAT	EDG2MOD	EDG2POL	EDG2SEL<3:0>				—	—	0000
		15:0	ON	—	CTMUSIDL	TGEN	EDGEN	EDGSEQEN	IDISSEN	CTTRIG	ITRIM<5:0>						IRNG<1:0>		0000

Legend: x = unknown value on Reset; — = unimplemented, read as ‘0’. Reset values are shown in hexadecimal.

Note 1: All registers in this table have corresponding CLR, SET and INV registers at its virtual address, plus an offset of 0x4, 0x8 and 0xC, respectively. See **Section 11.2 “CLR, SET, and INV Registers”** for more information.

© 2014-2019 Microchip Technology Inc.

REGISTER 26-1: CTMUCON: CTMU CONTROL REGISTER

Bit Range	Bit 31/23/15/7	Bit 30/22/14/6	Bit 29/21/13/5	Bit 28/20/12/4	Bit 27/19/11/3	Bit 26/18/10/2	Bit 25/17/9/1	Bit 24/16/8/0
31:24	R/W-0	R/W-0	R/W-0	R/W-0	R/W-0	R/W-0	R/W-0	R/W-0
	EDG1MOD	EDG1POL	EDG1SEL<3:0>				EDG2STAT	EDG1STAT
23:16	R/W-0	R/W-0	R/W-0	R/W-0	R/W-0	R/W-0	U-0	U-0
	EDG2MOD	EDG2POL	EDG2SEL<3:0>				—	—
15:8	R/W-0	U-0	R/W-0	R/W-0	R/W-0	R/W-0	R/W-0	R/W-0
	ON	—	CTMUSIDL	TGEN(1)	EDGEN	EDGSEQEN	IDISSEN(2)	CTTRIG
7:0	R/W-0	R/W-0	R/W-0	R/W-0	R/W-0	R/W-0	R/W-0	R/W-0
	ITRIM<5:0>						IRNG<1:0>	

Legend:			
R = Readable bit	W = Writable bit	U = Unimplemented bit, read as ‘0’	
-n = Value at POR	‘1’ = Bit is set	‘0’ = Bit is cleared	x = Bit is unknown

bit 31 **EDG1MOD:** Edge 1 Edge Sampling Select bit
1 = Input is edge-sensitive
0 = Input is level-sensitive

bit 30 **EDG1POL:** Edge 1 Polarity Select bit
1 = Edge 1 programmed for a positive edge response
0 = Edge 1 programmed for a negative edge response

bit 29-26 **EDG1SEL<3:0>:** Edge 1 Source Select bits
1111 = IC4 Capture Event is selected
1110 = C2OUT pin is selected
1101 = C1OUT pin is selected
1100 = IC3 Capture Event is selected
1011 = IC2 Capture Event is selected
1010 = IC1 Capture Event is selected
1001 = CTED8 pin is selected
1000 = CTED7 pin is selected
0111 = CTED6 pin is selected
0110 = CTED5 pin is selected
0101 = CTED4 pin is selected
0100 = CTED3 pin is selected
0011 = CTED1 pin is selected
0010 = CTED2 pin is selected
0001 = OC1 Compare Event is selected
0000 = Timer1 Event is selected

bit 25 **EDG2STAT:** Edge 2 Status bit
Indicates the status of Edge 2 and can be written to control edge source
1 = Edge 2 has occurred
0 = Edge 2 has not occurred

Note 1: When this bit is set for Pulse Delay Generation, the EDG2SEL<3:0> bits must be set to ‘1110’ to select C2OUT.

2: The ADC module Sample and Hold capacitor is not automatically discharged between sample/conversion cycles. Software using the ADC as part of a capacitive measurement, must discharge the ADC capacitor before conducting the measurement. The IDISSEN bit, when set to ‘1’, performs this function. The ADC module must be sampling while the IDISSEN bit is active to connect the discharge sink to the capacitor array.

3: Refer to the CTMU Current Source Specifications (Table 31-41) in **Section 31.0 “40 MHz Electrical Characteristics”** for current values.

4: This bit setting is not available for the CTMU temperature diode.

REGISTER 26-1: CTMUCON: CTMU CONTROL REGISTER (CONTINUED)

bit 24 **EDG1STAT:** Edge 1 Status bit
Indicates the status of Edge 1 and can be written to control edge source
1 = Edge 1 has occurred
0 = Edge 1 has not occurred

bit 23 **EDG2MOD:** Edge 2 Edge Sampling Select bit
1 = Input is edge-sensitive
0 = Input is level-sensitive

bit 22 **EDG2POL:** Edge 2 Polarity Select bit
1 = Edge 2 programmed for a positive edge response
0 = Edge 2 programmed for a negative edge response

bit 21-18 **EDG2SEL<3:0>:** Edge 2 Source Select bits
1111 = IC4 Capture Event is selected
1110 = C2OUT pin is selected
1101 = C1OUT pin is selected
1100 = PBCLK clock is selected
1011 = IC3 Capture Event is selected
1010 = IC2 Capture Event is selected
1001 = IC1 Capture Event is selected
1000 = CTED13 pin is selected
0111 = CTED12 pin is selected
0110 = CTED11 pin is selected
0101 = CTED10 pin is selected
0100 = CTED9 pin is selected
0011 = CTED1 pin is selected
0010 = CTED2 pin is selected
0001 = OC1 Compare Event is selected
0000 = Timer1 Event is selected

bit 17-16 **Unimplemented:** Read as '0'

bit 15 **ON:** ON Enable bit
1 = Module is enabled
0 = Module is disabled

bit 14 **Unimplemented:** Read as '0'

bit 13 **CTMUSIDL:** Stop in Idle Mode bit
1 = Discontinue module operation when device enters Idle mode
0 = Continue module operation in Idle mode

bit 12 **TGEN:** Time Generation Enable bit(1)
1 = Enables edge delay generation
0 = Disables edge delay generation

bit 11 **EDGEN:** Edge Enable bit
1 = Edges are not blocked
0 = Edges are blocked

Note 1: When this bit is set for Pulse Delay Generation, the EDG2SEL<3:0> bits must be set to '1110' to select C2OUT.

2: The ADC module Sample and Hold capacitor is not automatically discharged between sample/conversion cycles. Software using the ADC as part of a capacitive measurement, must discharge the ADC capacitor before conducting the measurement. The IDISSEN bit, when set to '1', performs this function. The ADC module must be sampling while the IDISSEN bit is active to connect the discharge sink to the capacitor array.

3: Refer to the CTMU Current Source Specifications (Table 31-41) in **Section 31.0 "40 MHz Electrical Characteristics"** for current values.

4: This bit setting is not available for the CTMU temperature diode.

© 2014-2019 Microchip Technology Inc.

REGISTER 26-1: CTMUCON: CTMU CONTROL REGISTER (CONTINUED)

bit 10 **EDGSEQEN:** Edge Sequence Enable bit
1 = Edge 1 must occur before Edge 2 can occur
0 = No edge sequence is needed

bit 9 **IDISSEN:** Analog Current Source Control bit(2)
1 = Analog current source output is grounded
0 = Analog current source output is not grounded

bit 8 **CTTRIG:** Trigger Control bit
1 = Trigger output is enabled
0 = Trigger output is disabled

bit 7-2 **ITRIM<5:0>:** Current Source Trim bits
011111 = Maximum positive change from nominal current
011110
.
.
.
000001 = Minimum positive change from nominal current
000000 = Nominal current output specified by IRNG<1:0>
111111 = Minimum negative change from nominal current
.
.
.
100010
100001 = Maximum negative change from nominal current

bit 1-0 **IRNG<1:0>:** Current Range Select bits(3)
11 = 100 times base current
10 = 10 times base current
01 = Base current level
00 = 1000 times base current(4)

Note 1: When this bit is set for Pulse Delay Generation, the EDG2SEL<3:0> bits must be set to '1110' to select C2OUT.

2: The ADC module Sample and Hold capacitor is not automatically discharged between sample/conversion cycles. Software using the ADC as part of a capacitive measurement, must discharge the ADC capacitor before conducting the measurement. The IDISSEN bit, when set to '1', performs this function. The ADC module must be sampling while the IDISSEN bit is active to connect the discharge sink to the capacitor array.

3: Refer to the CTMU Current Source Specifications (Table 31-41) in **Section 31.0 "40 MHz Electrical Characteristics"** for current values.

4: This bit setting is not available for the CTMU temperature diode.

NOTES:

© 2014-2019 Microchip Technology Inc.

27.0 POWER-SAVING FEATURES

Note: This data sheet summarizes the features of the PIC32MX1XX/2XX/5XX 64/100-pin family of devices. It is not intended to be a comprehensive reference source. To complement the information in this data sheet, refer to **Section 10. "Power-Saving Features"** (DS60001130) in the *"PIC32 Family Reference Manual"*, which is available from the Microchip web site (www.microchip.com/PIC32).

This section describes power-saving features for the PIC32MX1XX/2XX/5XX 64/100-pin family of devices. These PIC32 devices offer a total of nine methods and modes, organized into two categories, that allow the user to balance power consumption with device performance. In all of the methods and modes described in this section, power-saving is controlled by software.

27.1 Power Saving with CPU Running

When the CPU is running, power consumption can be controlled by reducing the CPU clock frequency, lowering the PBCLK and by individually disabling modules. These methods are grouped into the following categories:

- FRC Run mode: the CPU is clocked from the FRC clock source with or without postscalers.
- LPRC Run mode: the CPU is clocked from the LPRC clock source.
- SOSC Run mode: the CPU is clocked from the SOSC clock source.

In addition, the Peripheral Bus Scaling mode is available where peripherals are clocked at the programmable fraction of the CPU clock (SYSCLK).

27.2 CPU Halted Methods

The device supports two power-saving modes, Sleep and Idle, both of which Halt the clock to the CPU. These modes operate with all clock sources, as listed below:

- POSC Idle mode: the system clock is derived from the POSC. The system clock source continues to operate. Peripherals continue to operate, but can optionally be individually disabled.
- FRC Idle mode: the system clock is derived from the FRC with or without postscalers. Peripherals continue to operate, but can optionally be individually disabled.
- SOSC Idle mode: the system clock is derived from the SOSC. Peripherals continue to operate, but can optionally be individually disabled.
- LPRC Idle mode: the system clock is derived from the LPRC. Peripherals continue to operate, but can optionally be individually disabled. This is the lowest power mode for the device with a clock running.
- Sleep mode: the CPU, the system clock source and any peripherals that operate from the system clock source are Halted. Some peripherals can operate in Sleep using specific clock sources. This is the lowest power mode for the device.

27.3 Power-Saving Operation

Peripherals and the CPU can be Halted or disabled to further reduce power consumption.

27.3.1 SLEEP MODE

Sleep mode has the lowest power consumption of the device power-saving operating modes. The CPU and most peripherals are Halted. Select peripherals can continue to operate in Sleep mode and can be used to wake the device from Sleep. See the individual peripheral module sections for descriptions of behavior in Sleep.

Sleep mode includes the following characteristics:

- The CPU is Halted.
- The system clock source is typically shutdown. See **Section 27.3.3 "Peripheral Bus Scaling Method"** for specific information.
- There can be a wake-up delay based on the oscillator selection.
- The Fail-Safe Clock Monitor (FSCM) does not operate during Sleep mode.
- The BOR circuit remains operative during Sleep mode.
- The WDT, if enabled, is not automatically cleared prior to entering Sleep mode.
- Some peripherals can continue to operate at limited functionality in Sleep mode. These peripherals include I/O pins that detect a change in the input signal, WDT, ADC, UART and peripherals that use an external clock input or the internal LPRC oscillator (e.g., RTCC, Timer1 and Input Capture).
- I/O pins continue to sink or source current in the same manner as they do when the device is not in Sleep.
- The USB module can override the disabling of the Posc or FRC. Refer to the USB section for specific details.
- Modules can be individually disabled by software prior to entering Sleep in order to further reduce consumption.

The processor will exit, or 'wake-up', from Sleep on one of the following events:

- On any interrupt from an enabled source that is operating in Sleep. The interrupt priority must be greater than the current CPU priority.
- On any form of device Reset
- On a WDT time-out

If the interrupt priority is lower than or equal to the current priority, the CPU will remain Halted, but the PBCLK will start running and the device will enter into Idle mode.

27.3.2 IDLE MODE

In Idle mode, the CPU is Halted but the System Clock (SYSCLK) source is still enabled. This allows peripherals to continue operation when the CPU is Halted. Peripherals can be individually configured to Halt when entering Idle by setting their respective SIDL bit. Latency, when exiting Idle mode, is very low due to the CPU oscillator source remaining active.

Note 1: Changing the PBCLK divider ratio requires recalculation of peripheral timing. For example, assume the UART is configured for 9600 baud with a PB clock ratio of 1:1 and a POSC of 8 MHz. When the PB clock divisor of 1:2 is used, the input frequency to the baud clock is cut in half; therefore, the baud rate is reduced to 1/2 its former value. Due to numeric truncation in calculations (such as the baud rate divisor), the actual baud rate may be a tiny percentage different than expected. For this reason, any timing calculation required for a peripheral should be performed with the new PB clock frequency instead of scaling the previous value based on a change in the PB divisor ratio.

2: Oscillator start-up and PLL lock delays are applied when switching to a clock source that was disabled and that uses a crystal and/or the PLL. For example, assume the clock source is switched from POSC to LPRC just prior to entering Sleep in order to save power. No oscillator start-up delay would be applied when exiting Idle. However, when switching back to POSC, the appropriate PLL and/or oscillator start-up/lock delays would be applied.

The device enters Idle mode when the SLPEN bit (OSCCON<4>) is clear and a `WAIT` instruction is executed.

The processor will wake or exit from Idle mode on the following events:

- On any interrupt event for which the interrupt source is enabled. The priority of the interrupt event must be greater than the current priority of the CPU. If the priority of the interrupt event is lower than or equal to current priority of the CPU, the CPU will remain Halted and the device will remain in Idle mode.
- On any form of device Reset
- On a WDT time-out interrupt

27.3.3 PERIPHERAL BUS SCALING METHOD

Most of the peripherals on the device are clocked using the PBCLK. The peripheral bus can be scaled relative to the SYSCLK to minimize the dynamic power consumed by the peripherals. The PBCLK divisor is controlled by PBDIV<1:0> (OSCCON<20:19>), allowing SYSCLK to PBCLK ratios of 1:1, 1:2, 1:4 and 1:8. All peripherals using PBCLK are affected when the divisor is changed. Peripherals such as the USB, Interrupt Controller, DMA, and the bus matrix are clocked directly from SYSCLK. As a result, they are not affected by PBCLK divisor changes.

Changing the PBCLK divisor affects:

- The CPU to peripheral access latency. The CPU has to wait for next PBCLK edge for a read to complete. In 1:8 mode, this results in a latency of one to seven SYSCLKs.
- The power consumption of the peripherals. Power consumption is directly proportional to the frequency at which the peripherals are clocked. The greater the divisor, the lower the power consumed by the peripherals.

To minimize dynamic power, the PB divisor should be chosen to run the peripherals at the lowest frequency that provides acceptable system performance. When selecting a PBCLK divider, peripheral clock requirements, such as baud rate accuracy, should be taken into account. For example, the UART peripheral may not be able to achieve all baud rate values at some PBCLK divider depending on the SYSCLK value.

© 2014-2019 Microchip Technology Inc.

27.4 Peripheral Module Disable

The Peripheral Module Disable (PMD) registers provide a method to disable a peripheral module by stopping all clock sources supplied to that module. When a peripheral is disabled using the appropriate PMD control bit, the peripheral is in a minimum power consumption state. The control and status registers associated with the peripheral are also disabled, so writes to those registers do not have effect and read values are invalid.

To disable a peripheral, the associated PMDx bit must be set to '1'. To enable a peripheral, the associated PMDx bit must be cleared (default). See Table 27-1 for more information.

Note: Disabling a peripheral module while it's ON bit is set, may result in undefined behavior. The ON bit for the associated peripheral module must be cleared prior to disable a module via the PMDx bits.

TABLE 27-1: PERIPHERAL MODULE DISABLE BITS AND LOCATIONS

Peripheral(1)	PMDx bit Name(1)	Register Name and Bit Location
ADC1	AD1MD	PMD1<0>
CTMU	CTMUMD	PMD1<8>
Comparator Voltage Reference	CVRMD	PMD1<12>
Comparator 1	CMP1MD	PMD2<0>
Comparator 2	CMP2MD	PMD2<1>
Comparator 3	CMP3MD	PMD2<2>
Input Capture 1	IC1MD	PMD3<0>
Input Capture 2	IC2MD	PMD3<1>
Input Capture 3	IC3MD	PMD3<2>
Input Capture 4	IC4MD	PMD3<3>
Input Capture 5	IC5MD	PMD3<4>
Output Compare 1	OC1MD	PMD3<16>
Output Compare 2	OC2MD	PMD3<17>
Output Compare 3	OC3MD	PMD3<18>
Output Compare 4	OC4MD	PMD3<19>
Output Compare 5	OC5MD	PMD3<20>
Timer1	T1MD	PMD4<0>
Timer2	T2MD	PMD4<1>
Timer3	T3MD	PMD4<2>
Timer4	T4MD	PMD4<3>
Timer5	T5MD	PMD4<4>
UART1	U1MD	PMD5<0>
UART2	U2MD	PMD5<1>
UART3	U3MD	PMD5<2>
UART4	U4MD	PMD5<3>
UART5	U5MD	PMD5<4>
SPI1	SPI1MD	PMD5<8>
SPI2	SPI2MD	PMD5<9>
SPI3	SPI3MD	PMD5<10>
SPI4	SPI4MD	PMD5<11>
I2C1	I2C1MD	PMD5<16>
I2C2	I2C2MD	PMD5<17>
USB(2)	USBMD	PMD5<24>
CAN	CAN1MD	PMD5<28>
RTCC	RTCCMD	PMD6<0>
Reference Clock Output	REFOMD	PMD6<1>
PMP	PMPMD	PMD6<16>

Note 1: Not all modules and associated PMDx bits are available on all devices. See **TABLE 1: "PIC32MX1XX/2XX/5XX 64/100-pin Controller Family Features"** for the list of available peripherals.

2: Module must not be busy after clearing the associated ON bit and prior to setting the USBMD bit.

27.4.1 CONTROLLING CONFIGURATION CHANGES

Because peripherals can be disabled during run time, some restrictions on disabling peripherals are needed to prevent accidental configuration changes. PIC32 devices include two features to prevent alterations to enabled or disabled peripherals:

- Control register lock sequence
- Configuration bit select lock

27.4.1.1 Control Register Lock

Under normal operation, writes to the PMDx registers are not allowed. Attempted writes appear to execute normally, but the contents of the registers remain unchanged. To change these registers, they must be unlocked in hardware. The register lock is controlled by the PMDLOCK Configuration bit (CFGCON<12>). Setting PMDLOCK prevents writes to the control registers; clearing PMDLOCK allows writes.

To set or clear PMDLOCK, an unlock sequence must be executed. Refer to **Section 6. “Oscillator”** (DS60001112) in the *“PIC32 Family Reference Manual”* for details.

27.4.1.2 Configuration Bit Select Lock

As an additional level of safety, the device can be configured to prevent more than one write session to the PMDx registers. The PMDL1WAY Configuration bit (DEVCFG3<28>) blocks the PMDLOCK bit from being cleared after it has been set once. If PMDLOCK remains set, the register unlock procedure does not execute, and the peripheral pin select control registers cannot be written to. The only way to clear the bit and re-enable PMD functionality is to perform a device Reset.

© 2014-2019 Microchip Technology Inc.

TABLE 27-2: PERIPHERAL MODULE DISABLE REGISTER SUMMARY

Virtual Address (BF80_#)	Register Name	Bit Range	Bits																All Resets(1)
			31/15	30/14	29/13	28/12	27/11	26/10	25/9	24/8	23/7	22/6	21/5	20/4	19/3	18/2	17/1	16/0	
F240	PMD1	31:16	—	—	—	—	—	—	—	—	—	—	—	—	—	—	—	—	0000
		15:0	—	—	—	CVRMD	—	—	—	CTMUMD	—	—	—	—	—	—	—	AD1MD	0000
F250	PMD2	31:16	—	—	—	—	—	—	—	—	—	—	—	—	—	—	—	—	0000
		15:0	—	—	—	—	—	—	—	—	—	—	—	—	—	CMP3MD	CMP2MD	CMP1MD	0000
F260	PMD3	31:16	—	—	—	—	—	—	—	—	—	—	—	OC5MD	OC4MD	OC3MD	OC2MD	OC1MD	0000
		15:0	—	—	—	—	—	—	—	—	—	—	—	IC5MD	IC4MD	IC3MD	IC2MD	IC1MD	0000
F270	PMD4	31:16	—	—	—	—	—	—	—	—	—	—	—	—	—	—	—	—	0000
		15:0	—	—	—	—	—	—	—	—	—	—	—	T5MD	T4MD	T3MD	T2MD	T1MD	0000
F280	PMD5	31:16	—	—	—	CAN1MD	—	—	—	USBMD(1)	—	—	—	—	—	—	I2C1MD	I2C1MD	0000
		15:0	—	—	—	—	SPI4MD	SPI3MD	SPI2MD	SPI1MD	—	—	—	U5MD	U4MD	U3MD	U2MD	U1MD	0000
F290	PMD6	31:16	—	—	—	—	—	—	—	—	—	—	—	—	—	—	—	PMPMD	0000
		15:0	—	—	—	—	—	—	—	—	—	—	—	—	—	—	REFOMD	RTCCMD	0000

Legend: x = unknown value on Reset; — = unimplemented, read as ‘0’. Reset values are shown in hexadecimal.

Note 1: This bit is only available on devices with a USB module.

© 2014-2019 Microchip Technology Inc.

NOTES:

© 2014-2019 Microchip Technology Inc.

28.0 SPECIAL FEATURES

Note: This data sheet summarizes the features of the PIC32MX1XX/2XX/5XX 64/100-pin family of devices. However, it is not intended to be a comprehensive reference source. To complement the information in this data sheet, refer to **Section 9. "Watchdog Timer and Power-up Timer"** (DS60001114), **Section 32. "Configuration"** (DS60001124) and **Section 33. "Programming and Diagnostics"** (DS60001129) in the *"PIC32 Family Reference Manual"*, which are available from the Microchip web site (www.microchip.com/PIC32).

PIC32MX1XX/2XX/5XX 64/100-pin devices include several features intended to maximize application flexibility and reliability and minimize cost through elimination of external components. These are:

- Flexible device configuration
- Watchdog Timer (WDT)
- Joint Test Action Group (JTAG) interface
- In-Circuit Serial Programming™ (ICSP™)

28.1 Configuration Bits

The Configuration bits can be programmed using the following registers to select various device configurations.

- DEVCFG0: Device Configuration Word 0
- DEVCFG1: Device Configuration Word 1
- DEVCFG2: Device Configuration Word 2
- DEVCFG3: Device Configuration Word 3
- CFGCON: Configuration Control Register

In addition, the DEVID register (Register 28-6) provides device and revision information.

28.2 Registers

TABLE 28-1: DEVCFG: DEVICE CONFIGURATION WORD SUMMARY

Virtual Address (BFC0_#)	Register Name	Bit Range	Bits 31/15	30/14	29/13	28/12	27/11	26/10	25/9	24/8	23/7	22/6	21/5	20/4	19/3	18/2	17/1	16/0	All Resets
0BF0	DEVCFG3	31:16	FVBUSONIO	FUSBIDIO	IOL1WAY	PMDL1WAY	—	—	—	—	—	—	—	—	—	—	—	—	xxxx
		15:0	USERID<15:0>																xxxx
0BF4	DEVCFG2	31:16	—	—	—	—	—	—	—	—	—	—	—	—	—	FPLLODIV<2:0>			xxxx
		15:0	UPLLEN(1)	—	—	—	—	UPLLIDIV<2:0>(1)			—	FPLLMUL<2:0>			—	FPLLIDIV<2:0>			xxxx
0BF8	DEVCFG1	31:16	—	—	—	—	—	—	FWDTWINSZ<1:0>		FWDTEN	WINDIS	—	WDTPS<4:0>					xxxx
		15:0	FCKSM<1:0>		FPBDIV<1:0>		—	OSCIOFNC	POSCMOD<1:0>		IESO	—	FSOSCEN	—	—	FNOSC<2:0>			xxxx
0BFC	DEVCFG0	31:16	—	—	—	CP	—	—	—	BWP	—	—	—	—	PWP<9:6>				xxxx
		15:0	PWP<5:0>				—	—	—	—	—	—	—	ICESEL<1:0>		JTAGEN	DEBUG<1:0>		xxxx

Legend: x = unknown value on Reset; — = unimplemented, read as ‘0’. Reset values are shown in hexadecimal.

Note 1: This bit is only available on devices with a USB module.

TABLE 28-2: DEVICE AND REVISION ID SUMMARY

Virtual Address (BF80_#)	Register Name	Bit Range	Bits 31/15	30/14	29/13	28/12	27/11	26/10	25/9	24/8	23/7	22/6	21/5	20/4	19/3	18/2	17/1	16/0	All Resets(1)
F200	CFGCON	31:16	—	—	—	—	—	—	—	—	—	—	—	—	—	—	—	—	0000
		15:0	—	—	IOLOCK	PMDLOCK	—	—	—	—	—	—	—	—	JTAGEN	TROEN(2)	—	TDOEN	000B
F220	DEVID	31:16	VER<3:0>				DEVID<27:16>												xxxx
		15:0	DEVID<15:0>																xxxx
F230	SYSKEY(3)	31:16	SYSKEY<31:0>																0000
		15:0																	0000

Legend: x = unknown value on Reset; — = unimplemented, read as ‘0’. Reset values are shown in hexadecimal.

Note 1: Reset values are dependent on the device.

2: This bit is not available on 64-pin devices.

© 2014-2019 Microchip Technology Inc.

REGISTER 28-1: DEVCFG0: DEVICE CONFIGURATION WORD 0

Bit Range	Bit 31/23/15/7	Bit 30/22/14/6	Bit 29/21/13/5	Bit 28/20/12/4	Bit 27/19/11/3	Bit 26/18/10/2	Bit 25/17/9/1	Bit 24/16/8/0
31:24	r-0	r-1	r-1	R/P	r-1	r-1	r-1	R/P
	—	—	—	CP	—	—	—	BWP
23:16	r-1	r-1	r-1	r-1	R/P	R/P	R/P	R/P
	—	—	—	—	PWP<9:6>			
15:8	R/P	R/P	R/P	R/P	R/P	R/P	r-1	r-1
	PWP<5:0>						—	—
7:0	r-1	r-1	r-1	R/P	R/P	R/P	R/P	R/P
	—	—	—	ICESEL<1:0>		JTAGEN(1)	DEBUG<1:0>	

Legend:	r = Reserved bit	P = Programmable bit	
R = Readable bit	W = Writable bit	U = Unimplemented bit, read as ‘0’	
-n = Value at POR	‘1’ = Bit is set	‘0’ = Bit is cleared	x = Bit is unknown

bit 31 **Reserved:** Write ‘0’

bit 30-29 **Reserved:** Write ‘1’

bit 28 **CP:** Code-Protect bit

Prevents boot and program Flash memory from being read or modified by an external programming device.
1 = Protection is disabled
0 = Protection is enabled

bit 27-25 **Reserved:** Write ‘1’

bit 24 **BWP:** Boot Flash Write-Protect bit

Prevents boot Flash memory from being modified during code execution.
1 = Boot Flash is writable
0 = Boot Flash is not writable

bit 23-20 **Reserved:** Write ‘1’

Note 1: This bit sets the value for the JTAGEN bit in the CFGCON register.

REGISTER 28-1: DEVCFG0: DEVICE CONFIGURATION WORD 0 (CONTINUED)

bit 19-10 **PWP<9:0>:** Program Flash Write-Protect bits

Prevents selected program Flash memory pages from being modified during code execution. The PWP bits represent the one's compliment of the number of write protected program Flash memory pages.

1111111111 = Disabled
1111111110 = Memory below 0x0400 address is write-protected
1111111101 = Memory below 0x0800 address is write-protected
1111111100 = Memory below 0x0C00 address is write-protected
1111111011 = Memory below 0x1000 (4K) address is write-protected
1111111010 = Memory below 0x1400 address is write-protected
1111111001 = Memory below 0x1800 address is write-protected
1111111000 = Memory below 0x1C00 address is write-protected
1111110111 = Memory below 0x2000 (8K) address is write-protected
1111110110 = Memory below 0x2400 address is write-protected
1111110101 = Memory below 0x2800 address is write-protected
1111110100 = Memory below 0x2C00 address is write-protected
1111110011 = Memory below 0x3000 address is write-protected
1111110010 = Memory below 0x3400 address is write-protected
1111110001 = Memory below 0x3800 address is write-protected
1111110000 = Memory below 0x3C00 address is write-protected
1111101111 = Memory below 0x4000 (16K) address is write-protected
.
.
.
1110111111 = Memory below 0x10000 (64K) address is write-protected
.
.
.
1101111111 = Memory below 0x20000 (128K) address is write-protected
.
.
.
1011111111 = Memory below 0x40000 (256K) address is write-protected
.
.
.
0111111111 = Memory below 0x80000 (512K) address is write-protected
.
.
.
0000000000 = All possible memory is write-protected

Note: These bits are effective only if Boot Flash is also protected by clearing the BWP bit (DEVCFG0<24>).

bit 9-5 **Reserved:** Write '1'

bit 4-3 **ICESEL<1:0>:** In-Circuit Emulator/Debugger Communication Channel Select bits

11 = PGEC1/PGED1 pair is used
10 = PGEC2/PGED2 pair is used
01 = PGEC3/PGED3 pair is used
00 = Reserved

bit 2 **JTAGEN:** JTAG Enable bit(1)

1 = JTAG is enabled
0 = JTAG is disabled

bit 1-0 **DEBUG<1:0>:** Background Debugger Enable bits (forced to '11' if code-protect is enabled)

1x = Debugger is disabled
0x = Debugger is enabled

Note 1: This bit sets the value for the JTAGEN bit in the CFGCON register.

© 2014-2019 Microchip Technology Inc.

REGISTER 28-2: DEVCFG1: DEVICE CONFIGURATION WORD 1

Bit Range	Bit 31/23/15/7	Bit 30/22/14/6	Bit 29/21/13/5	Bit 28/20/12/4	Bit 27/19/11/3	Bit 26/18/10/2	Bit 25/17/9/1	Bit 24/16/8/0
31:24	r-1	r-1	r-1	r-1	r-1	r-1	R/P	R/P
	—	—	—	—	—	—	FWDTWINSZ<1:0>	
23:16	R/P	R/P	r-1	R/P	R/P	R/P	R/P	R/P
	FWDTEN	WINDIS	—	WDTPS<4:0>				
15:8	R/P	R/P	R/P	R/P	r-1	R/P	R/P	R/P
	FCKSM<1:0>		FPBDIV<1:0>		—	OSCIOFNC	POSCMOD<1:0>	
7:0	R/P	r-1	R/P	r-1	r-1	R/P	R/P	R/P
	IESO	—	FSOSCEN	—	—	FNOSC<2:0>		

Legend:	r = Reserved bit	P = Programmable bit	
R = Readable bit	W = Writable bit	U = Unimplemented bit, read as ‘0’	
-n = Value at POR	‘1’ = Bit is set	‘0’ = Bit is cleared	x = Bit is unknown

bit 31-26 **Reserved:** Write ‘1’

bit 25-24 **FWDTWINSZ:** Watchdog Timer Window Size bits
11 = Window size is 25%
10 = Window size is 37.5%
01 = Window size is 50%
00 = Window size is 75%

bit 23 **FWDTEN:** Watchdog Timer Enable bit
1 = Watchdog Timer is enabled and cannot be disabled by software
0 = Watchdog Timer is not enabled; it can be enabled in software

bit 22 **WINDIS:** Watchdog Timer Window Enable bit
1 = Watchdog Timer is in non-Window mode
0 = Watchdog Timer is in Window mode

bit 21 **Reserved:** Write ‘1’

bit 20-16 **WDTPS<4:0>:** Watchdog Timer Postscale Select bits
10100 = 1:1048576
10011 = 1:524288
10010 = 1:262144
10001 = 1:131072
10000 = 1:65536
01111 = 1:32768
01110 = 1:16384
01101 = 1:8192
01100 = 1:4096
01011 = 1:2048
01010 = 1:1024
01001 = 1:512
01000 = 1:256
00111 = 1:128
00110 = 1:64
00101 = 1:32
00100 = 1:16
00011 = 1:8
00010 = 1:4
00001 = 1:2
00000 = 1:1
All other combinations not shown result in operation = 10100

Note 1: Do not disable the POSC (POSCMOD = 11) when using this oscillator source.

REGISTER 28-2: DEVCFG1: DEVICE CONFIGURATION WORD 1 (CONTINUED)

bit 15-14 **FCKSM<1:0>:** Clock Switching and Monitor Selection Configuration bits
1x = Clock switching is disabled, Fail-Safe Clock Monitor is disabled
01 = Clock switching is enabled, Fail-Safe Clock Monitor is disabled
00 = Clock switching is enabled, Fail-Safe Clock Monitor is enabled

bit 13-12 **FPBDIV<1:0>:** Peripheral Bus Clock Divisor Default Value bits
11 = PBCLK is SYSCLK divided by 8
10 = PBCLK is SYSCLK divided by 4
01 = PBCLK is SYSCLK divided by 2
00 = PBCLK is SYSCLK divided by 1

bit 11 **Reserved:** Write '1'

bit 10 **OSCIOFNC:** CLKO Enable Configuration bit
1 = CLKO output disabled
0 = CLKO output signal active on the OSCO pin; Primary Oscillator must be disabled or configured for the External Clock mode (EC) for the CLKO to be active (POSCMOD<1:0> = 11 or 00)

bit 9-8 **POSCMOD<1:0>:** Primary Oscillator Configuration bits
11 = Primary Oscillator disabled
10 = HS Oscillator mode selected
01 = XT Oscillator mode selected
00 = External Clock mode selected

bit 7 **IESO:** Internal External Switchover bit
1 = Internal External Switchover mode is enabled (Two-Speed Start-up is enabled)
0 = Internal External Switchover mode is disabled (Two-Speed Start-up is disabled)

bit 6 **Reserved:** Write '1'

bit 5 **FSOSCEN:** Secondary Oscillator Enable bit
1 = Enable Secondary Oscillator
0 = Disable Secondary Oscillator

bit 4-3 **Reserved:** Write '1'

bit 2-0 **FNOSC<2:0>:** Oscillator Selection bits
111 = Fast RC Oscillator with divide-by-N (FRCDIV)
110 = FRCDIV16 Fast RC Oscillator with fixed divide-by-16 postscaler
101 = Low-Power RC Oscillator (LPRC)
100 = Secondary Oscillator (SOSC)
011 = Primary Oscillator (POSC) with PLL module (XT+PLL, HS+PLL, EC+PLL)
010 = Primary Oscillator (XT, HS, EC)(1)
001 = Fast RC Oscillator with divide-by-N with PLL module (FRCDIV+PLL)
000 = Fast RC Oscillator (FRC)

Note 1: Do not disable the POSC (POSCMOD = 11) when using this oscillator source.

© 2014-2019 Microchip Technology Inc.

REGISTER 28-3: DEVCFG2: DEVICE CONFIGURATION WORD 2

Bit Range	Bit 31/23/15/7	Bit 30/22/14/6	Bit 29/21/13/5	Bit 28/20/12/4	Bit 27/19/11/3	Bit 26/18/10/2	Bit 25/17/9/1	Bit 24/16/8/0
31:24	r-1	r-1	r-1	r-1	r-1	r-1	r-1	r-1
	—	—	—	—	—	—	—	—
23:16	r-1	r-1	r-1	r-1	r-1	R/P	R/P	R/P
	—	—	—	—	—	FPLLODIV<2:0>		
15:8	R/P	r-1	r-1	r-1	r-1	R/P	R/P	R/P
	UPLLEN(1)	—	—	—	—	UPLLIDIV<2:0>(1)		
7:0	r-1	R/P-1	R/P	R/P-1	r-1	R/P	R/P	R/P
	—	FPLLMUL<2:0>			—	FPLLIDIV<2:0>		

Legend:	r = Reserved bit	P = Programmable bit	
R = Readable bit	W = Writable bit	U = Unimplemented bit, read as ‘0’	
-n = Value at POR	‘1’ = Bit is set	‘0’ = Bit is cleared	x = Bit is unknown

bit 31-19 **Reserved:** Write ‘1’

bit 18-16 **FPLLODIV<2:0>:** Default PLL Output Divisor bits
- 111 = PLL output divided by 256
- 110 = PLL output divided by 64
- 101 = PLL output divided by 32
- 100 = PLL output divided by 16
- 011 = PLL output divided by 8
- 010 = PLL output divided by 4
- 001 = PLL output divided by 2
- 000 = PLL output divided by 1

bit 15 **UPLLEN:** USB PLL Enable bit(1)
- 1 = Disable and bypass USB PLL
- 0 = Enable USB PLL

bit 14-11 **Reserved:** Write ‘1’

bit 10-8 **UPLLIDIV<2:0>:** USB PLL Input Divider bits(1)
- 111 = 12x divider
- 110 = 10x divider
- 101 = 6x divider
- 100 = 5x divider
- 011 = 4x divider
- 010 = 3x divider
- 010 = 3x divider
- 001 = 2x divider
- 000 = 1x divider

bit 7 **Reserved:** Write ‘1’

bit 6-4 **FPLLMUL<2:0>:** PLL Multiplier bits
- 111 = 24x multiplier
- 110 = 21x multiplier
- 101 = 20x multiplier
- 100 = 19x multiplier
- 011 = 18x multiplier
- 010 = 17x multiplier
- 001 = 16x multiplier
- 000 = 15x multiplier

bit 3 **Reserved:** Write ‘1’

Note 1: This bit is available on PIC32MX2XX/5XX devices only.

REGISTER 28-3: DEVCFG2: DEVICE CONFIGURATION WORD 2 (CONTINUED)

bit 2-0 **FPLLIDIV<2:0>:** PLL Input Divider bits

`111` = 12x divider
`110` = 10x divider
`101` = 6x divider
`100` = 5x divider
`011` = 4x divider
`010` = 3x divider
`001` = 2x divider
`000` = 1x divider

Note 1: This bit is available on PIC32MX2XX/5XX devices only.

© 2014-2019 Microchip Technology Inc.

REGISTER 28-4: DEVCFG3: DEVICE CONFIGURATION WORD 3

Bit Range	Bit 31/23/15/7	Bit 30/22/14/6	Bit 29/21/13/5	Bit 28/20/12/4	Bit 27/19/11/3	Bit 26/18/10/2	Bit 25/17/9/1	Bit 24/16/8/0
31:24	R/P	R/P	R/P	R/P	U-0	U-0	U-0	U-0
	FVBUSONIO	FUSBIDIO	IOL1WAY	PMDL1WAY	—	—	—	—
23:16	U-0	U-0	U-0	U-0	U-0	U-0	U-0	U-0
	—	—	—	—	—	—	—	—
15:8	R/P	R/P	R/P	R/P	R/P	R/P	R/P	R/P
	USERID<15:8>							
7:0	R/P	R/P	R/P	R/P	R/P	R/P	R/P	R/P
	USERID<7:0>							

Legend:	r = Reserved bit	P = Programmable bit	
R = Readable bit	W = Writable bit	U = Unimplemented bit, read as ‘0’	
-n = Value at POR	‘1’ = Bit is set	‘0’ = Bit is cleared	x = Bit is unknown

bit 31 **FVBUSONIO:** USB VBUS_ON Selection bit
1 = VBUSON pin is controlled by the USB module
0 = VBUSON pin is controlled by the port function

bit 30 **FUSBIDIO:** USB USBID Selection bit
1 = USBID pin is controlled by the USB module
0 = USBID pin is controlled by the port function

bit 29 **IOL1WAY:** Peripheral Pin Select Configuration bit
1 = Allow only one reconfiguration
0 = Allow multiple reconfigurations

bit 28 **PMDL1WAY:** Peripheral Module Disable Configuration bit
1 = Allow only one reconfiguration
0 = Allow multiple reconfigurations

bit 27-16 **Unimplemented:** Read as ‘0’

bit 15-0 **USERID<15:0>:** This is a 16-bit value that is user-defined and is readable via ICSP™ and JTAG

REGISTER 28-5: CFGCON: CONFIGURATION CONTROL REGISTER

Bit Range	Bit 31/23/15/7	Bit 30/22/14/6	Bit 29/21/13/5	Bit 28/20/12/4	Bit 27/19/11/3	Bit 26/18/10/2	Bit 25/17/9/1	Bit 24/16/8/0
31:24	U-0	U-0	U-0	U-0	U-0	U-0	U-0	U-0
	—	—	—	—	—	—	—	—
23:16	U-0	U-0	U-0	U-0	U-0	U-0	U-0	U-0
	—	—	—	—	—	—	—	—
15:8	U-0	U-0	R/W-0	R/W-0	U-0	U-0	U-0	U-0
	—	—	IOLOCK(1)	PMDLOCK(1)	—	—	—	—
7:0	U-0	U-0	U-0	U-0	R/W-0	U-0	U-0	R/W-1
	—	—	—	—	JTAGEN	—	—	TDOEN

Legend:			
R = Readable bit	W = Writable bit	U = Unimplemented bit, read as ‘0’	
-n = Value at POR	‘1’ = Bit is set	‘0’ = Bit is cleared	x = Bit is unknown

bit 31-14 **Unimplemented:** Read as ‘0’

bit 13 **IOLOCK:** Peripheral Pin Select Lock bit(1)
- 1 = Peripheral Pin Select is locked. Writes to PPS registers is not allowed
- 0 = Peripheral Pin Select is not locked. Writes to PPS registers is allowed

bit 12 **PMDLOCK:** Peripheral Module Disable bit(1)
- 1 = Peripheral module is locked. Writes to PMD registers is not allowed
- 0 = Peripheral module is not locked. Writes to PMD registers is allowed

bit 11-4 **Unimplemented:** Read as ‘0’

bit 3 **JTAGEN:** JTAG Port Enable bit
- 1 = Enable the JTAG port
- 0 = Disable the JTAG port

bit 2-1 **Unimplemented:** Read as ‘0’

bit 0 **TDOEN:** TDO Enable for 2-Wire JTAG
- 1 = 2-wire JTAG protocol uses TDO
- 0 = 2-wire JTAG protocol does not use TDO

Note 1: To change this bit, the unlock sequence must be performed. Refer to **Section 6. “Oscillator”** (DS60001112) in the *“PIC32 Family Reference Manual”* for details.

© 2014-2019 Microchip Technology Inc.

REGISTER 28-6: DEVID: DEVICE AND REVISION ID REGISTER

Bit Range	Bit 31/23/15/7	Bit 30/22/14/6	Bit 29/21/13/5	Bit 28/20/12/4	Bit 27/19/11/3	Bit 26/18/10/2	Bit 25/17/9/1	Bit 24/16/8/0
31:24	R	R	R	R	R	R	R	R
	VER<3:0>(1)				DEVID<27:24>(1)			
23:16	R	R	R	R	R	R	R	R
	DEVID<23:16>(1)							
15:8	R	R	R	R	R	R	R	R
	DEVID<15:8>(1)							
7:0	R	R	R	R	R	R	R	R
	DEVID<7:0>(1)							

Legend:			
R = Readable bit	W = Writable bit	U = Unimplemented bit, read as ‘0’	
-n = Value at POR	‘1’ = Bit is set	‘0’ = Bit is cleared	x = Bit is unknown

bit 31-28 **VER<3:0>:** Revision Identifier bits(1)

bit 27-0 **DEVID<27:0>:** Device ID(1)

Note 1: See the *“PIC32 Flash Programming Specification”* (DS60001145) for a list of Revision and Device ID values.

28.3 On-Chip Voltage Regulator

All PIC32MX1XX/2XX/5XX 64/100-pin devices' core and digital logic are designed to operate at a nominal 1.8V. To simplify system designs, most devices in the PIC32MX1XX/2XX/5XX 64/100-pin family incorporate an on-chip regulator providing the required core logic voltage from VDD.

A low-ESR capacitor (such as tantalum) must be connected to the VCAP pin (see Figure 28-1). This helps to maintain the stability of the regulator. The recommended value for the filter capacitor is provided in **Section 31.1 "DC Characteristics"**.

Note:	It is important that the low-ESR capacitor is placed as close as possible to the VCAP pin.

28.3.1 HIGH VOLTAGE DETECT (HVD)

The HVD module monitors the core voltage at the VCAP pin. If a voltage above the required level is detected on VCAP, the I/O pins are disabled and the device is held in Reset as long as the HVD condition persists. See parameter HV10 (VHVD) in Table 31-11 in **Section 31.1 "DC Characteristics"** for more information.

28.3.2 ON-CHIP REGULATOR AND POR

It takes a fixed delay for the on-chip regulator to generate an output. During this time, designated as TPU, code execution is disabled. TPU is applied every time the device resumes operation after any power-down, including Sleep mode.

28.3.3 ON-CHIP REGULATOR AND BOR

PIC32MX1XX/2XX/5XX 64/100-pin devices also have a simple brown-out capability. If the voltage supplied to the regulator is inadequate to maintain a regulated level, the regulator Reset circuitry will generate a Brown-out Reset. This event is captured by the BOR flag bit (RCON<1>). The brown-out voltage levels are specific in **Section 31.1 "DC Characteristics"**.

FIGURE 28-1: CONNECTIONS FOR THE ON-CHIP REGULATOR

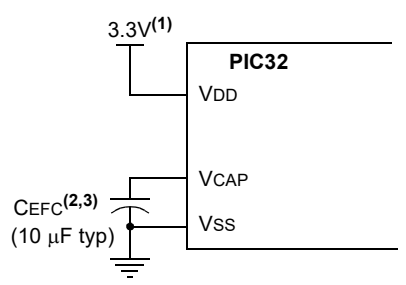

Note 1: These are typical operating voltages. Refer to **Section 31.1 "DC Characteristics"** for the full operating ranges of VDD.
2: It is important that the low-ESR capacitor is placed as close as possible to the VCAP pin.
3: The typical voltage on the VCAP pin is 1.8V.

28.4 Programming and Diagnostics

PIC32MX1XX/2XX/5XX 64/100-pin devices provide a complete range of programming and diagnostic features that can increase the flexibility of any application using them. These features allow system designers to include:

- Simplified field programmability using two-wire In-Circuit Serial Programming™ (ICSP™) interfaces
- Debugging using ICSP
- Programming and debugging capabilities using the EJTAG extension of JTAG
- JTAG boundary scan testing for device and board diagnostics

PIC32 devices incorporate two programming and diagnostic modules that provide a range of functions to the application developer.

FIGURE 28-2: BLOCK DIAGRAM OF PROGRAMMING, DEBUGGING AND TRACE PORTS

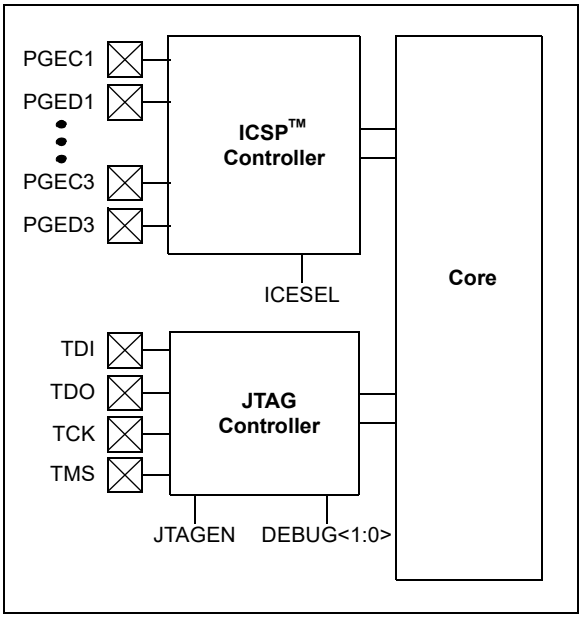

© 2014-2019 Microchip Technology Inc.

29.0 INSTRUCTION SET

The PIC32MX1XX/2XX/5XX 64/100-pin family instruction set complies with the MIPS32® Release 2 instruction set architecture. The PIC32 device family does not support the following features:

- Core extend instructions
- Coprocessor 1 instructions
- Coprocessor 2 instructions

Note: Refer to *"MIPS32® Architecture for Programmers Volume II: The MIPS32® Instruction Set"* at www.imgtec.com for more information.

NOTES:

© 2014-2019 Microchip Technology Inc.

30.0 DEVELOPMENT SUPPORT

The PIC® microcontrollers (MCU) and dsPIC® digital signal controllers (DSC) are supported with a full range of software and hardware development tools:

- Integrated Development Environment
  - MPLAB® X IDE Software
- Compilers/Assemblers/Linkers
  - MPLAB XC Compiler
  - MPASM™ Assembler
  - MPLINK™ Object Linker/ MPLIB™ Object Librarian
  - MPLAB Assembler/Linker/Librarian for Various Device Families
- Simulators
  - MPLAB X SIM Software Simulator
- Emulators
  - MPLAB REAL ICE™ In-Circuit Emulator
- In-Circuit Debuggers/Programmers
  - MPLAB ICD 3
  - PICkit™ 3
- Device Programmers
  - MPLAB PM3 Device Programmer
- Low-Cost Demonstration/Development Boards, Evaluation Kits and Starter Kits
- Third-party development tools

30.1 MPLAB X Integrated Development Environment Software

The MPLAB X IDE is a single, unified graphical user interface for Microchip and third-party software, and hardware development tool that runs on Windows®, Linux and Mac OS® X. Based on the NetBeans IDE, MPLAB X IDE is an entirely new IDE with a host of free software components and plug-ins for high-performance application development and debugging. Moving between tools and upgrading from software simulators to hardware debugging and programming tools is simple with the seamless user interface.

With complete project management, visual call graphs, a configurable watch window and a feature-rich editor that includes code completion and context menus, MPLAB X IDE is flexible and friendly enough for new users. With the ability to support multiple tools on multiple projects with simultaneous debugging, MPLAB X IDE is also suitable for the needs of experienced users.

Feature-Rich Editor:

- Color syntax highlighting
- Smart code completion makes suggestions and provides hints as you type
- Automatic code formatting based on user-defined rules
- Live parsing

User-Friendly, Customizable Interface:

- Fully customizable interface: toolbars, toolbar buttons, windows, window placement, etc.
- Call graph window

Project-Based Workspaces:

- Multiple projects
- Multiple tools
- Multiple configurations
- Simultaneous debugging sessions

File History and Bug Tracking:

- Local file history feature
- Built-in support for Bugzilla issue tracker

30.2 MPLAB XC Compilers

The MPLAB XC Compilers are complete ANSI C compilers for all of Microchip's 8, 16, and 32-bit MCU and DSC devices. These compilers provide powerful integration capabilities, superior code optimization and ease of use. MPLAB XC Compilers run on Windows, Linux or MAC OS X.

For easy source level debugging, the compilers provide debug information that is optimized to the MPLAB X IDE.

The free MPLAB XC Compiler editions support all devices and commands, with no time or memory restrictions, and offer sufficient code optimization for most applications.

MPLAB XC Compilers include an assembler, linker and utilities. The assembler generates relocatable object files that can then be archived or linked with other relocatable object files and archives to create an executable file. MPLAB XC Compiler uses the assembler to produce its object file. Notable features of the assembler include:

- Support for the entire device instruction set
- Support for fixed-point and floating-point data
- Command-line interface
- Rich directive set
- Flexible macro language
- MPLAB X IDE compatibility

30.3 MPASM Assembler

The MPASM Assembler is a full-featured, universal macro assembler for PIC10/12/16/18 MCUs.

The MPASM Assembler generates relocatable object files for the MPLINK Object Linker, Intel® standard HEX files, MAP files to detail memory usage and symbol reference, absolute LST files that contain source lines and generated machine code, and COFF files for debugging.

The MPASM Assembler features include:

- Integration into MPLAB X IDE projects
- User-defined macros to streamline assembly code
- Conditional assembly for multipurpose source files
- Directives that allow complete control over the assembly process

30.4 MPLINK Object Linker/ MPLIB Object Librarian

The MPLINK Object Linker combines relocatable objects created by the MPASM Assembler. It can link relocatable objects from precompiled libraries, using directives from a linker script.

The MPLIB Object Librarian manages the creation and modification of library files of precompiled code. When a routine from a library is called from a source file, only the modules that contain that routine will be linked in with the application. This allows large libraries to be used efficiently in many different applications.

The object linker/library features include:

- Efficient linking of single libraries instead of many smaller files
- Enhanced code maintainability by grouping related modules together
- Flexible creation of libraries with easy module listing, replacement, deletion and extraction

30.5 MPLAB Assembler, Linker and Librarian for Various Device Families

MPLAB Assembler produces relocatable machine code from symbolic assembly language for PIC24, PIC32 and dsPIC DSC devices. MPLAB XC Compiler uses the assembler to produce its object file. The assembler generates relocatable object files that can then be archived or linked with other relocatable object files and archives to create an executable file. Notable features of the assembler include:

- Support for the entire device instruction set
- Support for fixed-point and floating-point data
- Command-line interface
- Rich directive set
- Flexible macro language
- MPLAB X IDE compatibility

© 2014-2019 Microchip Technology Inc.

30.6 MPLAB X SIM Software Simulator

The MPLAB X SIM Software Simulator allows code development in a PC-hosted environment by simulating the PIC MCUs and dsPIC DSCs on an instruction level. On any given instruction, the data areas can be examined or modified and stimuli can be applied from a comprehensive stimulus controller. Registers can be logged to files for further run-time analysis. The trace buffer and logic analyzer display extend the power of the simulator to record and track program execution, actions on I/O, most peripherals and internal registers.

The MPLAB X SIM Software Simulator fully supports symbolic debugging using the MPLAB XC Compilers, and the MPASM and MPLAB Assemblers. The software simulator offers the flexibility to develop and debug code outside of the hardware laboratory environment, making it an excellent, economical software development tool.

30.7 MPLAB REAL ICE In-Circuit Emulator System

The MPLAB REAL ICE In-Circuit Emulator System is Microchip's next generation high-speed emulator for Microchip Flash DSC and MCU devices. It debugs and programs all 8, 16 and 32-bit MCU, and DSC devices with the easy-to-use, powerful graphical user interface of the MPLAB X IDE.

The emulator is connected to the design engineer's PC using a high-speed USB 2.0 interface and is connected to the target with either a connector compatible with in-circuit debugger systems (RJ-11) or with the new high-speed, noise tolerant, Low-Voltage Differential Signal (LVDS) interconnection (CAT5).

The emulator is field upgradable through future firmware downloads in MPLAB X IDE. MPLAB REAL ICE offers significant advantages over competitive emulators including full-speed emulation, run-time variable watches, trace analysis, complex breakpoints, logic probes, a ruggedized probe interface and long (up to three meters) interconnection cables.

30.8 MPLAB ICD 3 In-Circuit Debugger System

The MPLAB ICD 3 In-Circuit Debugger System is Microchip's most cost-effective, high-speed hardware debugger/programmer for Microchip Flash DSC and MCU devices. It debugs and programs PIC Flash microcontrollers and dsPIC DSCs with the powerful, yet easy-to-use graphical user interface of the MPLAB IDE.

The MPLAB ICD 3 In-Circuit Debugger probe is connected to the design engineer's PC using a high-speed USB 2.0 interface and is connected to the target with a connector compatible with the MPLAB ICD 2 or MPLAB REAL ICE systems (RJ-11). MPLAB ICD 3 supports all MPLAB ICD 2 headers.

30.9 PICkit 3 In-Circuit Debugger/ Programmer

The MPLAB PICkit 3 allows debugging and programming of PIC and dsPIC Flash microcontrollers at a most affordable price point using the powerful graphical user interface of the MPLAB IDE. The MPLAB PICkit 3 is connected to the design engineer's PC using a full-speed USB interface and can be connected to the target via a Microchip debug (RJ-11) connector (compatible with MPLAB ICD 3 and MPLAB REAL ICE). The connector uses two device I/O pins and the Reset line to implement in-circuit debugging and In-Circuit Serial Programming™ (ICSP™).

30.10 MPLAB PM3 Device Programmer

The MPLAB PM3 Device Programmer is a universal, CE compliant device programmer with programmable voltage verification at V_{DDMIN} and V_{DDMAX} for maximum reliability. It features a large LCD display (128 x 64) for menus and error messages, and a modular, detachable socket assembly to support various package types. The ICSP cable assembly is included as a standard item. In Stand-Alone mode, the MPLAB PM3 Device Programmer can read, verify and program PIC devices without a PC connection. It can also set code protection in this mode. The MPLAB PM3 connects to the host PC via an RS-232 or USB cable. The MPLAB PM3 has high-speed communications and optimized algorithms for quick programming of large memory devices, and incorporates an MMC card for file storage and data applications.

© 2014-2019 Microchip Technology Inc.

30.11 Demonstration/Development Boards, Evaluation Kits, and Starter Kits

A wide variety of demonstration, development and evaluation boards for various PIC MCUs and dsPIC DSCs allows quick application development on fully functional systems. Most boards include prototyping areas for adding custom circuitry and provide application firmware and source code for examination and modification.

The boards support a variety of features, including LEDs, temperature sensors, switches, speakers, RS-232 interfaces, LCD displays, potentiometers and additional EEPROM memory.

The demonstration and development boards can be used in teaching environments, for prototyping custom circuits and for learning about various microcontroller applications.

In addition to the PICDEM™ and dsPICDEM™ demonstration/development board series of circuits, Microchip has a line of evaluation kits and demonstration software for analog filter design, KEELOQ® security ICs, CAN, IrDA®, PowerSmart battery management, SEEVAL® evaluation system, Sigma-Delta ADC, flow rate sensing, plus many more.

Also available are starter kits that contain everything needed to experience the specified device. This usually includes a single application and debug capability, all on one board.

Check the Microchip web page (www.microchip.com) for the complete list of demonstration, development and evaluation kits.

30.12 Third-Party Development Tools

Microchip also offers a great collection of tools from third-party vendors. These tools are carefully selected to offer good value and unique functionality.

- Device Programmers and Gang Programmers from companies, such as SoftLog and CCS
- Software Tools from companies, such as Gimpel and Trace Systems
- Protocol Analyzers from companies, such as Saleae and Total Phase
- Demonstration Boards from companies, such as MikroElektronika, Digilent® and Olimex
- Embedded Ethernet Solutions from companies, such as EZ Web Lynx, WIZnet and IPLogika®

© 2014-2019 Microchip Technology Inc.

31.0 40 MHz ELECTRICAL CHARACTERISTICS

This section provides an overview of the PIC32MX1XX/2XX/5XX 64/100-pin Family electrical characteristics for devices that operate at 40 MHz. Refer to **Section 32.0 "50 MHz Electrical Characteristics"** for additional specifications for operations at higher frequency. Additional information will be provided in future revisions of this document as it becomes available.

Absolute maximum ratings for the PIC32MX1XX/2XX/5XX 64/100-pin Family devices are listed below. Exposure to these maximum rating conditions for extended periods may affect device reliability. Functional operation of the device at these or any other conditions, above the parameters indicated in the operation listings of this specification, is not implied.

Absolute Maximum Ratings

(See Note 1)

Ambient temperature under bias ..... -40°C to +105°C
Storage temperature ..... -65°C to +150°C
Voltage on V_{DD} with respect to V_{SS} ..... -0.3V to +4.0V
Voltage on any pin that is not 5V tolerant, with respect to V_{SS} **(Note 3)** ..... -0.3V to (V_{DD} + 0.3V)
Voltage on any 5V tolerant pin with respect to V_{SS} when $V_{DD} \geq 2.3V$ **(Note 3)** ..... -0.3V to +5.5V
Voltage on any 5V tolerant pin with respect to V_{SS} when $V_{DD} < 2.3V$ **(Note 3)** ..... -0.3V to +3.6V
Voltage on D+ or D- pin with respect to V_{USB3V3} ..... -0.3V to (V_{USB3V3} + 0.3V)
Voltage on V_{BUS} with respect to V_{SS} ..... -0.3V to +5.5V
Maximum current out of V_{SS} pin(s) ..... 300 mA
Maximum current into V_{DD} pin(s) **(Note 2)** ..... 300 mA
Maximum output current sunk by any I/O pin ..... 15 mA
Maximum output current sourced by any I/O pin ..... 15 mA
Maximum current sunk by all ports ..... 200 mA
Maximum current sourced by all ports **(Note 2)** ..... 200 mA

Note 1: Stresses above those listed under **"Absolute Maximum Ratings"** may cause permanent damage to the device. This is a stress rating only and functional operation of the device at those or any other conditions, above those indicated in the operation listings of this specification, is not implied. Exposure to maximum rating conditions for extended periods may affect device reliability.

2: Maximum allowable current is a function of device maximum power dissipation (see Table 31-2).

3: See the **"Device Pin Tables"** section for the 5V tolerant pins.

31.1 DC Characteristics

TABLE 31-1: OPERATING MIPS VS. VOLTAGE

Characteristic	V_{DD} Range (in Volts)(1)	Temp. Range (in °C)	Max. Frequency
			PIC32MX1XX/2XX/5XX 64/100-pin Family
DC5	V_{BOR}-3.6V	-40°C to +105°C	40 MHz

Note 1: Overall functional device operation at $V_{BORMIN} < V_{DD} < V_{DDMIN}$ is tested, but not characterized. All device Analog modules, such as ADC, etc., will function, but with degraded performance below V_{DDMIN}. Refer to parameter BO10 in Table 31-10 for BOR values.

TABLE 31-2: THERMAL OPERATING CONDITIONS

Rating	Symbol	Min.	Typical	Max.	Unit
Industrial Temperature Devices					
Operating Junction Temperature Range	T_J	-40	—	+125	°C
Operating Ambient Temperature Range	T_A	-40	—	+85	°C
V-temp Temperature Devices					
Operating Junction Temperature Range	T_J	-40	—	+140	°C
Operating Ambient Temperature Range	T_A	-40	—	+105	°C
Power Dissipation: Internal Chip Power Dissipation: $P_{INT} = V_{DD} \times (I_{DD} - S\ I_{OH})$ I/O Pin Power Dissipation: $I/O = S\ (\{V_{DD} - V_{OH}\} \times I_{OH}) + S\ (V_{OL} \times I_{OL})$	P_D	$P_{INT} + P_{I/O}$			W
Maximum Allowed Power Dissipation	P_{DMAX}	$(T_J - T_A)/\theta_{JA}$			W

TABLE 31-3: THERMAL PACKAGING CHARACTERISTICS

Characteristics	Symbol	Typical	Max.	Unit	Notes
Package Thermal Resistance, 64-pin QFN	θ_{JA}	28	—	°C/W	**1**
Package Thermal Resistance, 64-pin TQFP, 10 mm x 10 mm	θ_{JA}	55	—	°C/W	**1**
Package Thermal Resistance, 100-pin TQFP, 12 mm x 12 mm	θ_{JA}	52	—	°C/W	**1**
Package Thermal Resistance, 100-pin TQFP, 14 mm x 14 mm	θ_{JA}	50	—	°C/W	**1**
Package Thermal Resistance, 100-pin TFBGA, 7 mm x7mm x1 mm	θ_{JA}	32	—	°C/W	**1**

Note 1: Junction to ambient thermal resistance, Theta-JA (θ_{JA}) numbers are achieved by package simulations.

© 2014-2019 Microchip Technology Inc.

TABLE 31-4: DC TEMPERATURE AND VOLTAGE SPECIFICATIONS

DC CHARACTERISTICS			Standard Operating Conditions: 2.3V to 3.6V (unless otherwise stated) Operating temperature -40°C ≤ TA ≤ +85°C for Industrial -40°C ≤ TA ≤ +105°C for V-temp				
Param. No.	**Symbol**	**Characteristics**	**Min.**	**Typ.**	**Max.**	**Units**	**Conditions**
Operating Voltage							
DC10	VDD	**Supply Voltage (Note 2)**	2.3	—	3.6	V	—
DC12	VDR	**RAM Data Retention Voltage (Note 1)**	1.75	—	—	V	—
DC16	VPOR	**VDD Start Voltage** to Ensure Internal Power-on Reset Signal	1.75	—	2.1	V	—
DC17	SVDD	**VDD Rise Rate** to Ensure Internal Power-on Reset Signal	0.00005	—	0.115	V/µs	—

Note 1: This is the limit to which VDD can be lowered without losing RAM data.

2: Overall functional device operation at VBORMIN < VDD < VDDMIN is tested, but not characterized. All device Analog modules, such as ADC, etc., will function, but with degraded performance below VDDMIN. Refer to parameter BO10 in Table 31-10 for BOR values.

TABLE 31-5: DC CHARACTERISTICS: OPERATING CURRENT (IDD)

DC CHARACTERISTICS			Standard Operating Conditions: 2.3V to 3.6V (unless otherwise stated) Operating temperature -40°C ≤ TA ≤ +85°C for Industrial -40°C ≤ TA ≤ +105°C for V-temp		
Parameter No.	**Typical(3)**	**Max.**	**Units**	**Conditions**	
Operating Current (IDD) (Notes 1, 2, 5)					
DC20	2	8	mA	4 MHz **(Note 4)**	
DC21	7	13	mA	10 MHz	
DC22	10	18	mA	20 MHz **(Note 4)**	
DC23	15	25	mA	30 MHz **(Note 4)**	
DC24	20	32	mA	40 MHz	
DC25	180	250	μA	+25ºC, 3.3V	LPRC (31 kHz) **(Note 4)**

Note 1: A device's IDD supply current is mainly a function of the operating voltage and frequency. Other factors, such as PBCLK (Peripheral Bus Clock) frequency, number of peripheral modules enabled, internal code execution pattern, execution from Program Flash memory vs. SRAM, I/O pin loading and switching rate, oscillator type, as well as temperature, can have an impact on the current consumption.

2: The test conditions for IDD measurements are as follows:

- Oscillator mode is EC (for 8 MHz and below) and EC+PLL (for above 8 MHz) with OSC1 driven by external square wave from rail-to-rail, (OSC1 input clock input over/undershoot < 100 mV required)
- OSC2/CLKO is configured as an I/O input pin
- USB PLL oscillator is disabled if the USB module is implemented, PBCLK divisor = 1:8
- CPU, Program Flash, and SRAM data memory are operational, SRAM data memory Wait states = `1`
- No peripheral modules are operating, (ON bit = `0`), but the associated PMD bit is cleared
- WDT, Clock Switching, Fail-Safe Clock Monitor, and Secondary Oscillator are disabled
- All I/O pins are configured as inputs and pulled to VSS
- $\overline{\text{MCLR}}$ = VDD
- CPU executing `while(1)` statement from Flash
- RTCC and JTAG are disabled

3: Data in the "Typical" column is at 3.3V, 25°C at specified operating frequency unless otherwise stated. Parameters are for design guidance only and are not tested.

4: This parameter is characterized, but not tested in manufacturing.

5: IPD electrical characteristics for devices with 256 KB Flash are only provided as Preliminary information.

© 2014-2019 Microchip Technology Inc.

TABLE 31-6: DC CHARACTERISTICS: IDLE CURRENT (I_{IDLE})

DC CHARACTERISTICS			Standard Operating Conditions: 2.3V to 3.6V (unless otherwise stated) Operating temperature -40°C ≤ TA ≤ +85°C for Industrial -40°C ≤ TA ≤ +105°C for V-temp			
Parameter No.	**Typical(2)**	**Max.**	**Units**	**Conditions**		
Idle Current (I_{IDLE}): Core Off, Clock on Base Current (Notes 1, 4)						
DC30a	1.5	5	mA	4 MHz **(Note 3)**		
DC31a	3	8	mA	10 MHz		
DC32a	5	12	mA	20 MHz **(Note 3)**		
DC33a	6.5	15	mA	30 MHz **(Note 3)**		
DC34a	8	20	mA	40 MHz		
DC37a	75	100	µA	-40°C	3.3V	LPRC (31 kHz) **(Note 3)**
DC37b	180	250	µA	+25°C		
DC37c	280	380	µA	+85°C		

Note 1: The test conditions for I_{IDLE} current measurements are as follows:

- Oscillator mode is EC (for 8 MHz and below) and EC+PLL (for above 8 MHz) with OSC1 driven by external square wave from rail-to-rail, (OSC1 input clock input over/undershoot < 100 mV required)
- OSC2/CLKO is configured as an I/O input pin
- USB PLL oscillator is disabled if the USB module is implemented, PBCLK divisor = 1:8
- CPU is in Idle mode (CPU core Halted), and SRAM data memory Wait states = 1
- No peripheral modules are operating, (ON bit = 0), but the associated PMD bit is cleared
- WDT, Clock Switching, Fail-Safe Clock Monitor, and Secondary Oscillator are disabled
- All I/O pins are configured as inputs and pulled to V_{SS}
- $\overline{MCLR}$ = V_{DD}
- RTCC and JTAG are disabled

2: Data in the “Typical” column is at 3.3V, 25°C unless otherwise stated. Parameters are for design guidance only and are not tested.

3: This parameter is characterized, but not tested in manufacturing.

4: I_{IDLE} electrical characteristics for devices with 256 KB Flash are only provided as Preliminary information.

TABLE 31-7: DC CHARACTERISTICS: POWER-DOWN CURRENT (I_{PD})

DC CHARACTERISTICS			Standard Operating Conditions: 2.3V to 3.6V (unless otherwise stated) Operating temperature -40°C ≤ TA ≤ +85°C for Industrial -40°C ≤ TA ≤ +105°C for V-temp		
Param. No.	**Typical(2)**	**Max.**	**Units**	**Conditions**	
Power-Down Current (I_{PD}) (Notes 1, 5)					
DC40k	33	78	μA	-40°C	Base Power-Down Current
DC40l	49	78	μA	+25°C	
DC40n	281	450	μA	+85°C	
DC40m	559	895	μA	+105ºC	
Module Differential Current					
DC41e	10	25	μA	3.6V	Watchdog Timer Current: ΔI_{WDT} **(Note 3)**
DC42e	29	50	μA	3.6V	RTCC + Timer1 w/32 kHz Crystal: ΔI_{RTCC} **(Note 3)**
DC43d	1000	1300	μA	3.6V	ADC: ΔI_{ADC} **(Notes 3,4)**

Note 1: The test conditions for I_{PD} current measurements are as follows:
- Oscillator mode is EC (for 8 MHz and below) and EC+PLL (for above 8 MHz) with OSC1 driven by external square wave from rail-to-rail, (OSC1 input clock input over/undershoot < 100 mV required)
- OSC2/CLKO is configured as an I/O input pin
- USB PLL oscillator is disabled if the USB module is implemented, PBCLK divisor = 1:8
- CPU is in Sleep mode, and SRAM data memory Wait states = 1
- No peripheral modules are operating, (ON bit = 0), but the associated PMD bit is set
- WDT, Clock Switching, Fail-Safe Clock Monitor, and Secondary Oscillator are disabled
- All I/O pins are configured as inputs and pulled to V_{SS}
- $\overline{MCLR}$ = V_{DD}
- RTCC and JTAG are disabled

2: Data in the “Typical” column is at 3.3V, 25°C unless otherwise stated. Parameters are for design guidance only and are not tested.

3: The Δ current is the additional current consumed when the module is enabled. This current should be added to the base I_{PD} current.

4: Test conditions for ADC module differential current are as follows: Internal ADC RC oscillator enabled.

5: I_{PD} electrical characteristics for devices with 256 KB Flash are only provided as Preliminary information.

© 2014-2019 Microchip Technology Inc.

TABLE 31-8: DC CHARACTERISTICS: I/O PIN INPUT SPECIFICATIONS

DC CHARACTERISTICS			Standard Operating Conditions: 2.3V to 3.6V (unless otherwise stated) Operating temperature -40°C ≤ TA ≤ +85°C for Industrial -40°C ≤ TA ≤ +105°C for V-temp				
Param. No.	**Symbol**	**Characteristics**	**Min.**	**Typical(1)**	**Max.**	**Units**	**Conditions**
	VIL	**Input Low Voltage**					
DI10		I/O Pins with PMP	VSS	—	0.15 VDD	V	
		I/O Pins	VSS	—	0.2 VDD	V	
DI18		SDAx, SCLx	VSS	—	0.3 VDD	V	SMBus disabled **(Note 4)**
DI19		SDAx, SCLx	VSS	—	0.8	V	SMBus enabled **(Note 4)**
	VIH	**Input High Voltage**					
DI20		I/O Pins not 5V-tolerant(5)	0.65 VDD	—	VDD	V	**(Note 4,6)**
		I/O Pins 5V-tolerant with PMP(5)	0.25 VDD + 0.8V	—	5.5	V	**(Note 4,6)**
		I/O Pins 5V-tolerant(5)	0.65 VDD	—	5.5	V	
DI28		SDAx, SCLx	0.65 VDD	—	5.5	V	SMBus disabled **(Note 4,6)**
DI29		SDAx, SCLx	2.1	—	5.5	V	SMBus enabled, 2.3V ≤ VPIN ≤ 5.5 **(Note 4,6)**
DI30	ICNPU	**Change Notification Pull-up Current**	—	-200	-50	μA	VDD = 3.3V, VPIN = VSS **(Note 3,6)**
DI31	ICNPD	**Change Notification Pull-down Current(4)**	50	200	—	μA	VDD = 3.3V, VPIN = VDD
	IIL	**Input Leakage Current (Note 3)**					
DI50		I/O Ports	—	—	±1	μA	VSS ≤ VPIN ≤ VDD, Pin at high-impedance
DI51		Analog Input Pins	—	—	±1	μA	VSS ≤ VPIN ≤ VDD, Pin at high-impedance
DI55		$\overline{\text{MCLR}}$(2)	—	—	±1	μA	VSS ≤ VPIN ≤ VDD
DI56		OSC1	—	—	±1	μA	VSS ≤ VPIN ≤ VDD, XT and HS modes

Note 1: Data in "Typical" column is at 3.3V, 25°C unless otherwise stated. Parameters are for design guidance only and are not tested.

2: The leakage current on the $\overline{\text{MCLR}}$ pin is strongly dependent on the applied voltage level. The specified levels represent normal operating conditions. Higher leakage current may be measured at different input voltages.

3: Negative current is defined as current sourced by the pin.

4: This parameter is characterized, but not tested in manufacturing.

5: See the **"Device Pin Tables"** section for the 5V-tolerant pins.

6: The VIH specifications are only in relation to externally applied inputs, and not with respect to the user-selectable internal pull-ups. External open drain input signals utilizing the internal pull-ups of the PIC32 device are guaranteed to be recognized only as a logic "high" internally to the PIC32 device, provided that the external load does not exceed the minimum value of ICNPU. For External "input" logic inputs that require a pull-up source, to guarantee the minimum VIH of those components, it is recommended to use an external pull-up resistor rather than the internal pull-ups of the PIC32 device.

TABLE 31-9: DC CHARACTERISTICS: I/O PIN OUTPUT SPECIFICATIONS

DC CHARACTERISTICS			Standard Operating Conditions: 2.3V to 3.6V (unless otherwise stated) Operating temperature -40°C ≤ TA ≤ +85°C for Industrial -40°C ≤ TA ≤ +105°C for V-temp				
Param.	**Symbol**	**Characteristic**	**Min.**	**Typ.**	**Max.**	**Units**	**Conditions**
DO10	VOL	**Output Low Voltage** I/O Pins: 4x Sink Driver Pins - All I/O output pins not defined as 8x Sink Driver pins	—	—	0.4	V	IOL ≤ 9 mA, VDD = 3.3V
		Output Low Voltage I/O Pins: 8x Sink Driver Pins - RB14, RC15, RD2, RD10, RD15, RF6, RF13, RG6	—	—	0.4	V	IOL ≤ 15 mA, VDD = 3.3V
DO20	VOH	**Output High Voltage** I/O Pins: 4x Source Driver Pins - All I/O output pins not defined as 8x Source Driver pins	2.4	—	—	V	IOH ≥ -10 mA, VDD = 3.3V
		Output High Voltage I/O Pins: 8x Source Driver Pins - RB14, RC15, RD2, RD10, RD15, RF6, RF13, RG6	2.4	—	—	V	IOH ≥ -15 mA, VDD = 3.3V
DO20A	VOH1	**Output High Voltage** I/O Pins: 4x Source Driver Pins - All I/O output pins not defined as 8x Sink Driver pins	1.5(1)	—	—	V	IOH ≥ -14 mA, VDD = 3.3V
			2.0(1)	—	—		IOH ≥ -12 mA, VDD = 3.3V
			3.0(1)	—	—		IOH ≥ -7 mA, VDD = 3.3V
		Output High Voltage I/O Pins: 8x Source Driver Pins - RB14, RC15, RD2, RD10, RD15, RF6, RF13, RG6	1.5(1)	—	—	V	IOH ≥ -22 mA, VDD = 3.3V
			2.0(1)	—	—		IOH ≥ -18 mA, VDD = 3.3V
			3.0(1)	—	—		IOH ≥ -10 mA, VDD = 3.3V

Note 1: Parameters are characterized, but not tested.

© 2014-2019 Microchip Technology Inc.

TABLE 31-10: ELECTRICAL CHARACTERISTICS: BOR

DC CHARACTERISTICS			Standard Operating Conditions: 2.3V to 3.6V (unless otherwise stated) Operating temperature -40°C ≤ TA ≤ +85°C for Industrial -40°C ≤ TA ≤ +105°C for V-temp				
Param. No.	**Symbol**	**Characteristics**	**Min.(1)**	**Typical**	**Max.**	**Units**	**Conditions**
BO10	VBOR	BOR Event on VDD transition high-to-low(2)	2.0	—	2.3	V	—

Note 1: Parameters are for design guidance only and are not tested in manufacturing.

2: Overall functional device operation at VBORMIN < VDD < VDDMIN is tested, but not characterized. All device Analog modules, such as ADC, etc., will function, but with degraded performance below VDDMIN.

TABLE 31-11: ELECTRICAL CHARACTERISTICS: HVD

DC CHARACTERISTICS			Standard Operating Conditions: 2.3V to 3.6V (unless otherwise stated) Operating temperature -40°C ≤ TA ≤ +85°C for Industrial -40°C ≤ TA ≤ +105°C for V-temp				
Param. No.(1)	**Symbol**	**Characteristics**	**Min.**	**Typical**	**Max.**	**Units**	**Conditions**
HV10	VHVD	High Voltage Detect on VCAP pin	—	2.5	—	V	—

Note 1: Parameters are for design guidance only and are not tested in manufacturing.

TABLE 31-12: DC CHARACTERISTICS: PROGRAM MEMORY

DC CHARACTERISTICS			Standard Operating Conditions: 2.3V to 3.6V (unless otherwise stated) Operating temperature -40°C ≤ TA ≤ +85°C for Industrial -40°C ≤ TA ≤ +105°C for V-temp				
Param. No.	**Symbol**	**Characteristics**	**Min.**	**Typical(1)**	**Max.**	**Units**	**Conditions**
		Program Flash Memory(3)					
D130	EP	Cell Endurance	20,000	—	—	E/W	—
D131	VPR	VDD for Read	2.3	—	3.6	V	—
D132	VPEW	VDD for Erase or Write	2.3	—	3.6	V	—
D134	TRETD	Characteristic Retention	20	—	—	Year	Provided no other specifications are violated
D135	IDDP	Supply Current during Programming	—	10	—	mA	—
	TWW	Word Write Cycle Time	—	411	—	FRC Cycles	See **Note 4**
D136	TRW	Row Write Cycle Time	—	6675	—	FRC Cycles	See **Note 2,4**
D137	TPE	Page Erase Cycle Time	—	20011	—	FRC Cycles	See **Note 4**
	TCE	Chip Erase Cycle Time	—	80180	—	FRC Cycles	See **Note 4**

Note 1: Data in “Typical” column is at 3.3V, 25°C unless otherwise stated.

2: The minimum SYSCLK for row programming is 4 MHz. Care should be taken to minimize bus activities during row programming, such as suspending any memory-to-memory DMA operations. If heavy bus loads are expected, selecting Bus Matrix Arbitration mode 2 (rotating priority) may be necessary. The default Arbitration mode is mode 1 (CPU has lowest priority).

3: Refer to the *“PIC32 Flash Programming Specification”* (DS60001145) for operating conditions during programming and erase cycles.

4: Translating this value to seconds depends on the FRC accuracy (See Table 31-19) and FRC tuning values (See Register 8-2).

© 2014-2019 Microchip Technology Inc.

TABLE 31-13: COMPARATOR SPECIFICATIONS

DC CHARACTERISTICS			Standard Operating Conditions (see Note 4): 2.3V to 3.6V (unless otherwise stated) Operating temperature -40°C ≤ TA ≤ +85°C for Industrial -40°C ≤ TA ≤ +105°C for V-temp				
Param. No.	**Symbol**	**Characteristics**	**Min.**	**Typ.**	**Max.**	**Units**	**Comments**
D300	VIOFF	Input Offset Voltage	—	±7.5	±25	mV	AVDD = VDD, AVSS = VSS
D301	VICM(2)	Input Common Mode Voltage	0	—	VDD	V	AVDD = VDD, AVSS = VSS
D302	CMRR(2)	Common Mode Rejection Ratio	55	—	—	dB	Max VICM = (VDD - 1)V
D303	TRESP(1,2)	Response Time	—	150	400	ns	AVDD = VDD, AVSS = VSS
D304	ON2OV(2)	Comparator Enabled to Output Valid	—	—	10	μs	Comparator module is configured before setting the comparator ON bit
D305	IVREF	Internal Voltage Reference	1.14	1.2	1.26	V	—

Note 1: Response time measured with one comparator input at (VDD – 1.5)/2, while the other input transitions from VSS to VDD.

2: These parameters are characterized but not tested.

3: Settling time measured while CVRR = `1` and CVR<3:0> transitions from ‘`0000`’ to ‘`1111`’. This parameter is characterized, but not tested in manufacturing.

4: The Comparator module is functional at VBORMIN < VDD < VDDMIN, but with degraded performance. Unless otherwise stated, module functionality is tested, but not characterized.

TABLE 31-14: COMPARATOR VOLTAGE REFERENCE SPECIFICATIONS

DC CHARACTERISTICS			Standard Operating Conditions: 2.3V to 3.6V (unless otherwise stated) Operating temperature -40°C ≤ TA ≤ +85°C for Industrial -40°C ≤ TA ≤ +105°C for V-temp				
Param. No.	**Symbol**	**Characteristics**	**Min.**	**Typ.**	**Max.**	**Units**	**Comments**
D312	TSET	Internal 4-bit DAC Comparator Reference Settling time.	—	—	10	μs	See **Note 1**
D313	DACREFH	CVREF Input Voltage Reference Range	AVSS	—	AVDD	V	CVRSRC with CVRSS = 0
			VREF-	—	VREF+	V	CVRSRC with CVRSS = 1
D314	DVREF	CVREF Programmable Output Range	0	—	0.625 x DACREFH	V	0 to 0.625 DACREFH with DACREFH/24 step size
			0.25 x DACREFH	—	0.719 x DACREFH	V	0.25 x DACREFH to 0.719 DACREFH with DACREFH/32 step size
D315	DACRES	Resolution	—	—	DACREFH/24		CVRCON<CVRR> = 1
			—	—	DACREFH/32		CVRCON<CVRR> = 0
D316	DACACC	Absolute Accuracy(2)	—	—	1/4	LSB	DACREFH/24, CVRCON<CVRR> = 1
			—	—	1/2	LSB	DACREFH/32, CVRCON<CVRR> = 0

Note 1: Settling time was measured while CVRR = 1 and CVR<3:0> transitions from '0000' to '1111'. This parameter is characterized, but is not tested in manufacturing.

2: These parameters are characterized but not tested.

TABLE 31-15: INTERNAL VOLTAGE REGULATOR SPECIFICATIONS

DC CHARACTERISTICS			Standard Operating Conditions: 2.3V to 3.6V (unless otherwise stated) Operating temperature -40°C ≤ TA ≤ +85°C for Industrial -40°C ≤ TA ≤ +105°C for V-temp				
Param. No.	**Symbol**	**Characteristics**	**Min.**	**Typical**	**Max.**	**Units**	**Comments**
D321	CEFC	External Filter Capacitor Value	8	10	—	μF	Capacitor must be low series resistance (≤ 3 ohm). Typical voltage on the VCAP pin is 1.8V.

© 2014-2019 Microchip Technology Inc.

31.2 AC Characteristics and Timing Parameters

The information contained in this section defines PIC32MX1XX/2XX/5XX 64/100-pin AC characteristics and timing parameters.

FIGURE 31-1: LOAD CONDITIONS FOR DEVICE TIMING SPECIFICATIONS

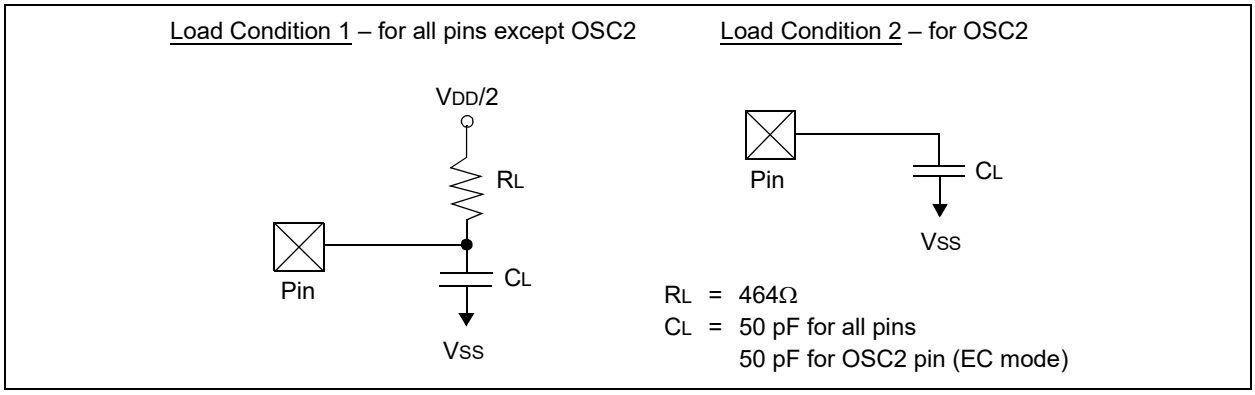

TABLE 31-16: CAPACITIVE LOADING REQUIREMENTS ON OUTPUT PINS

AC CHARACTERISTICS			Standard Operating Conditions: 2.3V to 3.6V (unless otherwise stated) Operating temperature -40°C ≤ TA ≤ +85°C for Industrial -40°C ≤ TA ≤ +105°C for V-temp				
Param. No.	**Symbol**	**Characteristics**	**Min.**	**Typical(1)**	**Max.**	**Units**	**Conditions**
DO50	COSCO	OSC2 pin	—	—	15	pF	In XT and HS modes when an external crystal is used to drive OSC1
DO50a	CSOSC	SOSCI/SOSCO pins	—	33	—	pF	Epson P/N: MC-306 32.7680K-A0:ROHS
DO56	CIO	All I/O pins and OSC2	—	—	50	pF	EC mode
DO58	CB	SCLx, SDAx	—	—	400	pF	In I^2C mode

Note 1: Data in “Typical” column is at 3.3V, 25°C unless otherwise stated. Parameters are for design guidance only and are not tested.

FIGURE 31-2: EXTERNAL CLOCK TIMING

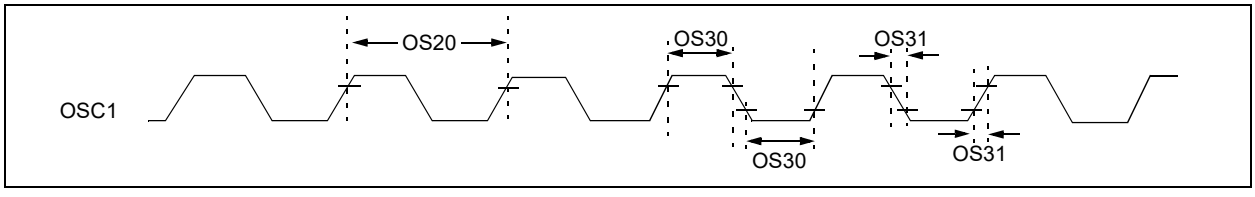

TABLE 31-17: EXTERNAL CLOCK TIMING REQUIREMENTS

AC CHARACTERISTICS			Standard Operating Conditions: 2.3V to 3.6V (unless otherwise stated) Operating temperature -40°C ≤ TA ≤ +85°C for Industrial -40°C ≤ TA ≤ +105°C for V-temp				
Param. No.	**Symbol**	**Characteristics**	**Min.**	**Typical(1)**	**Max.**	**Units**	**Conditions**
OS10	FOSC	External CLKI Frequency (External clocks allowed only in EC and ECPLL modes)	DC 4	— —	40 40	MHz MHz	EC **(Note 4)** ECPLL **(Note 3)**
OS11		Oscillator Crystal Frequency	3	—	10	MHz	XT **(Note 4)**
OS12			4	—	10	MHz	XTPLL **(Notes 3,4)**
OS13			10	—	25	MHz	HS **(Note 5)**
OS14			10	—	25	MHz	HSPLL **(Notes 3,4)**
OS15			32	32.768	100	kHz	SOSC **(Note 4)**
OS20	TOSC	TOSC = 1/FOSC = TCY **(Note 2)**	—	—	—	—	See parameter OS10 for FOSC value
OS30	TOSL, TOSH	External Clock In (OSC1) High or Low Time	0.45 x TOSC	—	—	ns	EC **(Note 4)**
OS31	TOSR, TOSF	External Clock In (OSC1) Rise or Fall Time	—	—	0.05 x TOSC	ns	EC **(Note 4)**
OS40	TOST	Oscillator Start-up Timer Period (Only applies to HS, HSPLL, XT, XTPLL and SOSC Clock Oscillator modes)	—	1024	—	TOSC	**(Note 4)**
OS41	TFSCM	Primary Clock Fail Safe Time-out Period	—	2	—	ms	**(Note 4)**
OS42	GM	External Oscillator Transconductance (Primary Oscillator only)	—	12	—	mA/V	VDD = 3.3V, TA = +25°C **(Note 4)**

Note 1: Data in “Typical” column is at 3.3V, 25°C unless otherwise stated. Parameters are characterized but are not tested.

2: Instruction cycle period (TCY) equals the input oscillator time base period. All specified values are based on characterization data for that particular oscillator type under standard operating conditions with the device executing code. Exceeding these specified limits may result in an unstable oscillator operation and/or higher than expected current consumption. All devices are tested to operate at “min.” values with an external clock applied to the OSC1/CLKI pin.

3: PLL input requirements: 4 MHz ≤ FPLLIN ≤ 5 MHz (use PLL prescaler to reduce FOSC). This parameter is characterized, but tested at 10 MHz only at manufacturing.

4: This parameter is characterized, but not tested in manufacturing.

© 2014-2019 Microchip Technology Inc.

TABLE 31-18: PLL CLOCK TIMING SPECIFICATIONS

AC CHARACTERISTICS			Standard Operating Conditions: 2.3V to 3.6V (unless otherwise stated) Operating temperature -40°C ≤ TA ≤ +85°C for Industrial -40°C ≤ TA ≤ +105°C for V-temp				
Param. No.	**Symbol**	**Characteristics(1)**	**Min.**	**Typical**	**Max.**	**Units**	**Conditions**
OS50	FPLLI	PLL Voltage Controlled Oscillator (VCO) Input Frequency Range	3.92	—	5	MHz	ECPLL, HSPLL, XTPLL, FRCPLL modes
OS51	FSYS	On-Chip VCO System Frequency	60	—	120	MHz	—
OS52	TLOCK	PLL Start-up Time (Lock Time)	—	—	2	ms	—
OS53	DCLK	CLKO Stability(2) (Period Jitter or Cumulative)	-0.25	—	+0.25	%	Measured over 100 ms period

Note 1: These parameters are characterized, but not tested in manufacturing.

2: This jitter specification is based on clock-cycle by clock-cycle measurements. To get the effective jitter for individual time-bases on communication clocks, use the following formula:

$$EffectiveJitter = \frac{D_{CLK}}{\sqrt{\frac{SYSCLK}{CommunicationClock}}}$$

For example, if SYSCLK = 40 MHz and SPI bit rate = 20 MHz, the effective jitter is as follows:

$$EffectiveJitter = \frac{D_{CLK}}{\sqrt{\frac{40}{20}}} = \frac{D_{CLK}}{1.41}$$

TABLE 31-19: INTERNAL FRC ACCURACY

AC CHARACTERISTICS		Standard Operating Conditions: 2.3V to 3.6V (unless otherwise stated) Operating temperature -40°C ≤ TA ≤ +85°C for Industrial -40°C ≤ TA ≤ +105°C for V-temp				
Param. No.	**Characteristics**	**Min.**	**Typical**	**Max.**	**Units**	**Conditions**
Internal FRC Accuracy @ 8.00 MHz(1)						
F20a	FRC	-0.9	—	+0.9	%	-40°C ≤ TA ≤ +85°C
F20b	FRC	-2	—	+2	%	-40°C ≤ TA ≤ +105°C

Note 1: Frequency calibrated at 25°C and 3.3V. The TUN bits can be used to compensate for temperature drift.

TABLE 31-20: INTERNAL LPRC ACCURACY

AC CHARACTERISTICS		Standard Operating Conditions: 2.3V to 3.6V (unless otherwise stated) Operating temperature -40°C ≤ TA ≤ +85°C for Industrial -40°C ≤ TA ≤ +105°C for V-temp				
Param. No.	**Characteristics**	**Min.**	**Typical**	**Max.**	**Units**	**Conditions**
LPRC @ 31.25 kHz(1)						
F21	LPRC	-15	—	+15	%	—

Note 1: Change of LPRC frequency as VDD changes.

FIGURE 31-3: I/O TIMING CHARACTERISTICS

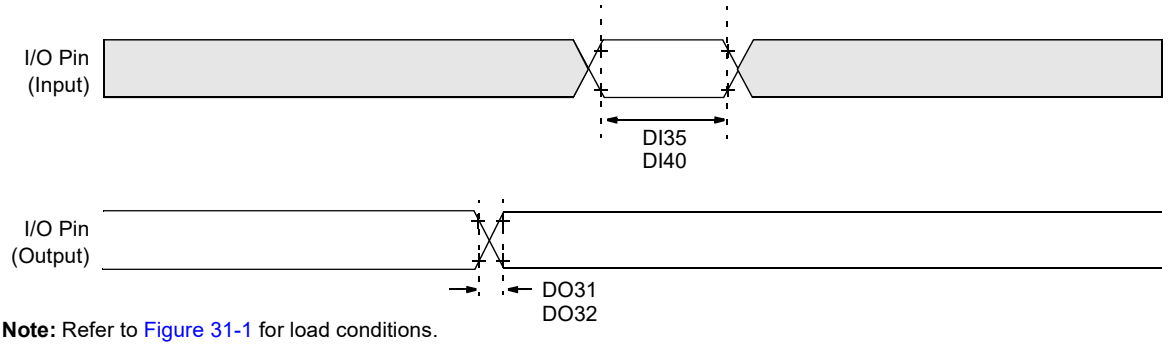

Note: Refer to Figure 31-1 for load conditions.

TABLE 31-21: I/O TIMING REQUIREMENTS

AC CHARACTERISTICS			Standard Operating Conditions: 2.3V to 3.6V (unless otherwise stated) Operating temperature -40°C ≤ TA ≤ +85°C for Industrial -40°C ≤ TA ≤ +105°C for V-temp				
Param. No.	**Symbol**	**Characteristics(2)**	**Min.**	**Typical(1)**	**Max.**	**Units**	**Conditions**
DO31	TIOR	Port Output Rise Time	—	5	15	ns	VDD < 2.5V
			—	5	10	ns	VDD > 2.5V
DO32	TIOF	Port Output Fall Time	—	5	15	ns	VDD < 2.5V
			—	5	10	ns	VDD > 2.5V
DI35	TINP	INTx Pin High or Low Time	10	—	—	ns	—
DI40	TRBP	CNx High or Low Time (input)	2	—	—	TSYSCLK	—

Note 1: Data in “Typical” column is at 3.3V, 25°C unless otherwise stated.

2: This parameter is characterized, but not tested in manufacturing.

© 2014-2019 Microchip Technology Inc.

FIGURE 31-4: POWER-ON RESET TIMING CHARACTERISTICS

Internal Voltage Regulator Enabled
Clock Sources = (FRC, FRCDIV, FRCDIV16, FRCPLL, EC, ECPLL and LPRC)

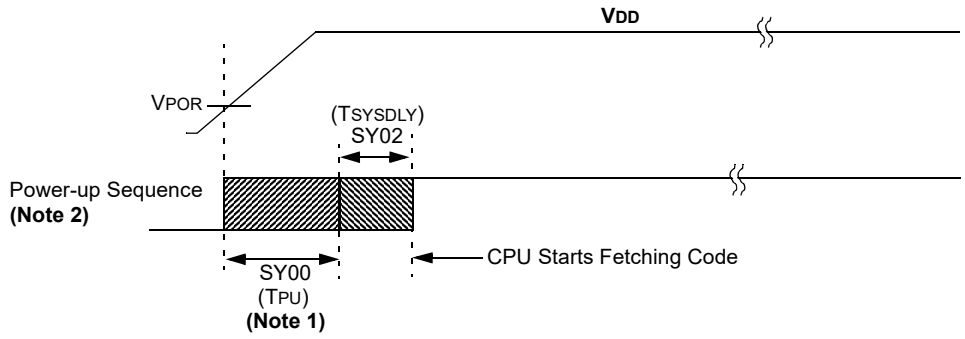

Internal Voltage Regulator Enabled
Clock Sources = (HS, HSPLL, XT, XTPLL and SOSC)

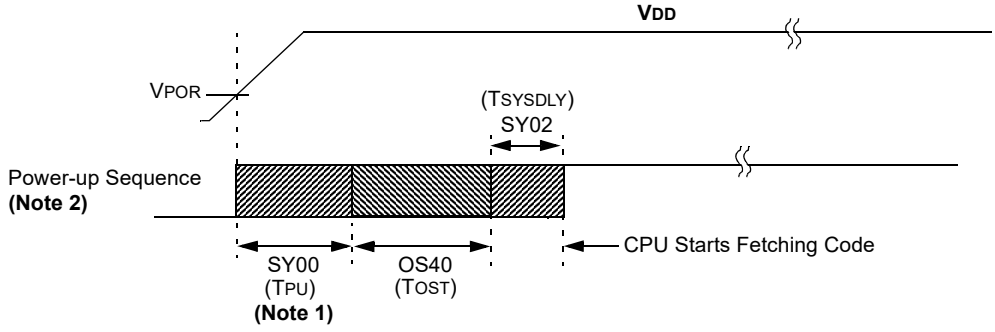

Note 1: The power-up period will be extended if the power-up sequence completes before the device exits from BOR ($V_{DD} < V_{DDMIN}$).

2: Includes interval voltage regulator stabilization delay.

FIGURE 31-5: EXTERNAL RESET TIMING CHARACTERISTICS

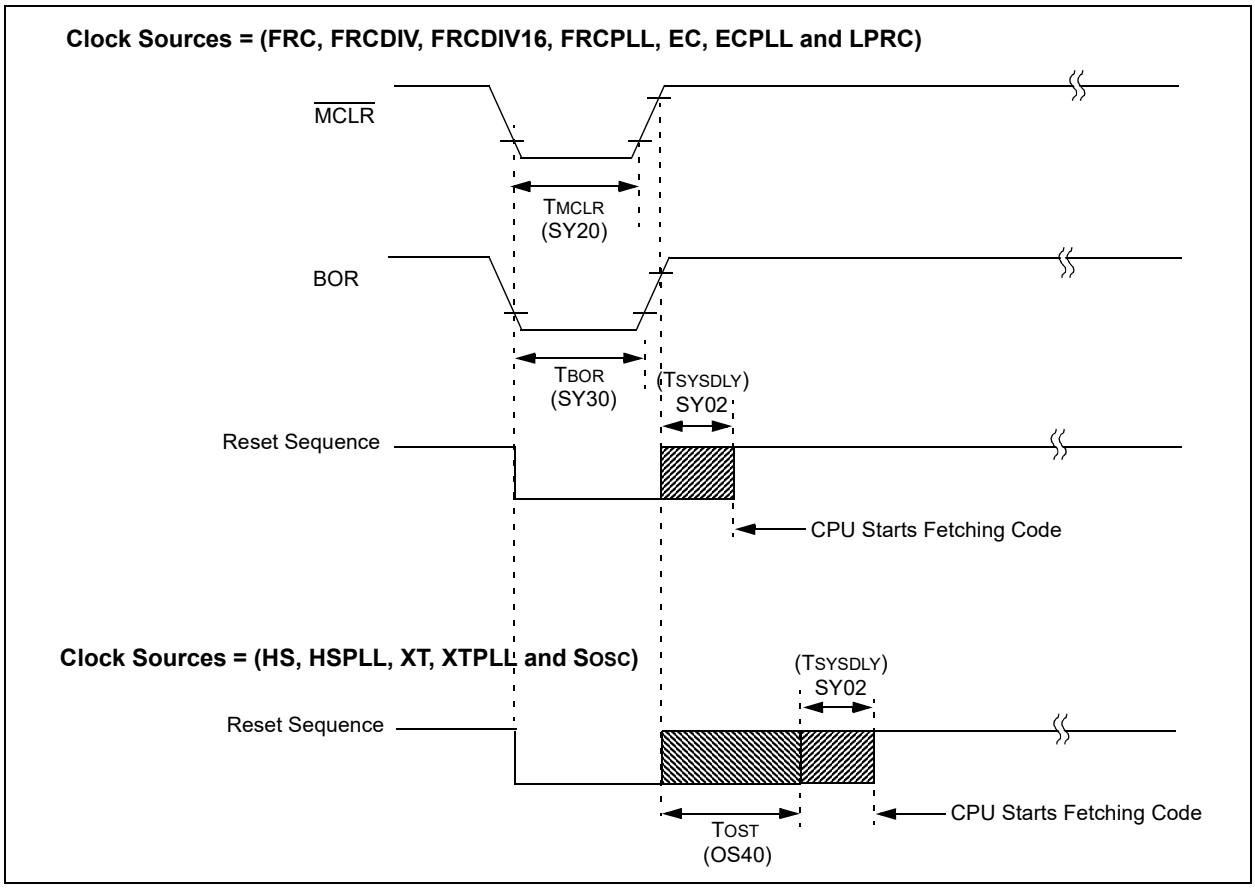

TABLE 31-22: RESETS TIMING

AC CHARACTERISTICS			Standard Operating Conditions: 2.3V to 3.6V (unless otherwise stated) Operating temperature -40°C ≤ TA ≤ +85°C for Industrial -40°C ≤ TA ≤ +105°C for V-temp				
Param. No.	**Symbol**	**Characteristics(1)**	**Min.**	**Typical(2)**	**Max.**	**Units**	**Conditions**
SY00	TPU	Power-up Period Internal Voltage Regulator Enabled	—	400	600	μs	—
SY02	TSYSDLY	System Delay Period: Time Required to Reload Device Configuration Fuses plus SYSCLK Delay before First instruction is Fetched.	—	1 μs + 8 SYSCLK cycles	—	—	—
SY20	TMCLR	$\overline{\text{MCLR}}$ Pulse Width (low)	2	—	—	μs	—
SY30	TBOR	BOR Pulse Width (low)	—	1	—	μs	—

Note 1: These parameters are characterized, but not tested in manufacturing.
2: Data in “Typ” column is at 3.3V, 25°C unless otherwise stated. Characterized by design but not tested.

© 2014-2019 Microchip Technology Inc.

FIGURE 31-6: TIMER1, 2, 3, 4, 5 EXTERNAL CLOCK TIMING CHARACTERISTICS

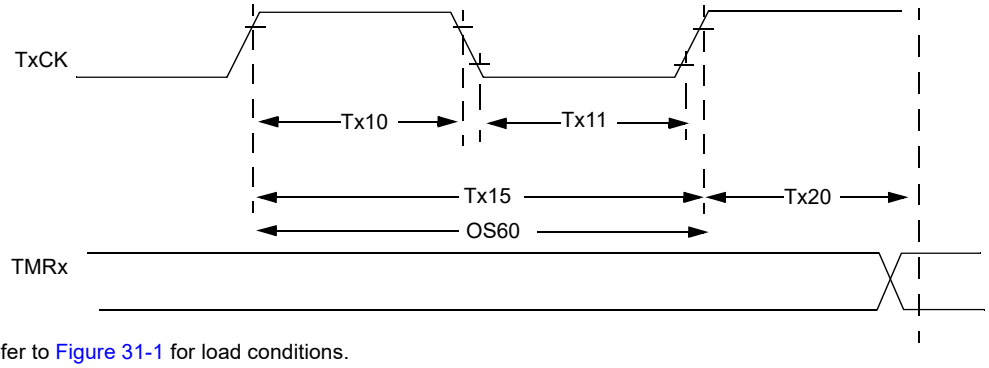

Note: Refer to Figure 31-1 for load conditions.

TABLE 31-23: TIMER1 EXTERNAL CLOCK TIMING REQUIREMENTS

AC CHARACTERISTICS(1)				Standard Operating Conditions: 2.3V to 3.6V (unless otherwise stated) Operating temperature -40°C ≤ TA ≤ +85°C for Industrial -40°C ≤ TA ≤ +105°C for V-temp				
Param. No.	**Symbol**	**Characteristics(2)**		**Min.**	**Typical**	**Max.**	**Units**	**Conditions**
TA10	TTxH	TxCK High Time	Synchronous, with prescaler	[(12.5 ns or 1 TPB)/N] + 25 ns	—	—	ns	Must also meet parameter TA15
			Asynchronous, with prescaler	10	—	—	ns	—
TA11	TTxL	TxCK Low Time	Synchronous, with prescaler	[(12.5 ns or 1 TPB)/N] + 25 ns	—	—	ns	Must also meet parameter TA15
			Asynchronous, with prescaler	10	—	—	ns	—
TA15	TTxP	TxCK Input Period	Synchronous, with prescaler	[(Greater of 25 ns or 2 TPB)/N] + 30 ns	—	—	ns	VDD > 2.7V
				[(Greater of 25 ns or 2 TPB)/N] + 50 ns	—	—	ns	VDD < 2.7V
			Asynchronous, with prescaler	20	—	—	ns	VDD > 2.7V **(Note 3)**
				50	—	—	ns	VDD < 2.7V **(Note 3)**
OS60	FT1	SOSC1/T1CK Oscillator Input Frequency Range (oscillator enabled by setting the TCS (T1CON<1>) bit)		32	—	100	kHz	—
TA20	TCKEXTMRL	Delay from External TxCK Clock Edge to Timer Increment		—		1	TPB	—

Note 1: Timer1 is a Type A timer.

2: This parameter is characterized, but not tested in manufacturing.

3: N = Prescale Value (1, 8, 64, 256).

TABLE 31-24: TIMER2, 3, 4, 5 EXTERNAL CLOCK TIMING REQUIREMENTS

AC CHARACTERISTICS				Standard Operating Conditions: 2.3V to 3.6V (unless otherwise stated) Operating temperature -40°C ≤ TA ≤ +85°C for Industrial -40°C ≤ TA ≤ +105°C for V-temp				
Param. No.	**Symbol**	**Characteristics(1)**		**Min.**	**Max.**	**Units**	**Conditions**	
TB10	TTXH	TxCK High Time	Synchronous, with prescaler	[(12.5 ns or 1 TPB)/N] + 25 ns	—	ns	Must also meet parameter TB15	N = prescale value (1, 2, 4, 8, 16, 32, 64, 256)
TB11	TTXL	TxCK Low Time	Synchronous, with prescaler	[(12.5 ns or 1 TPB)/N] + 25 ns	—	ns	Must also meet parameter TB15	
TB15	TTXP	TxCK Input Period	Synchronous, with prescaler	[(Greater of [(25 ns or 2 TPB)/N] + 30 ns	—	ns	VDD > 2.7V	
				[(Greater of [(25 ns or 2 TPB)/N] + 50 ns	—	ns	VDD < 2.7V	
TB20	TCKEXTMRL	Delay from External TxCK Clock Edge to Timer Increment		—	1	TPB	—	

Note 1: These parameters are characterized, but not tested in manufacturing.

FIGURE 31-7: INPUT CAPTURE (CAPx) TIMING CHARACTERISTICS

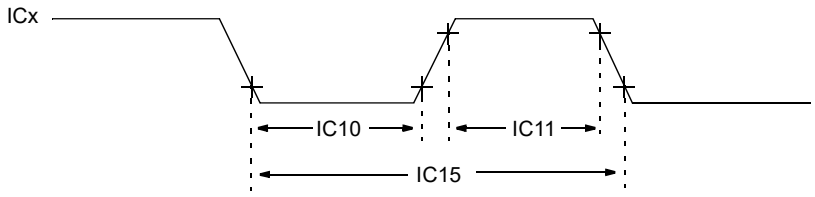

Note: Refer to Figure 31-1 for load conditions.

TABLE 31-25: INPUT CAPTURE MODULE TIMING REQUIREMENTS

AC CHARACTERISTICS			Standard Operating Conditions: 2.3V to 3.6V (unless otherwise stated) Operating temperature -40°C ≤ TA ≤ +85°C for Industrial -40°C ≤ TA ≤ +105°C for V-temp				
Param. No.	**Symbol**	**Characteristics(1)**	**Min.**	**Max.**	**Units**	**Conditions**	
IC10	TCCL	ICx Input Low Time	[(12.5 ns or 1 TPB)/N] + 25 ns	—	ns	Must also meet parameter IC15.	N = prescale value (1, 4, 16)
IC11	TCCH	ICx Input High Time	[(12.5 ns or 1 TPB)/N] + 25 ns	—	ns	Must also meet parameter IC15.	
IC15	TCCP	ICx Input Period	[(25 ns or 2 TPB)/N] + 50 ns	—	ns	—	

Note 1: These parameters are characterized, but not tested in manufacturing.

© 2014-2019 Microchip Technology Inc.

FIGURE 31-8: OUTPUT COMPARE MODULE (OCx) TIMING CHARACTERISTICS

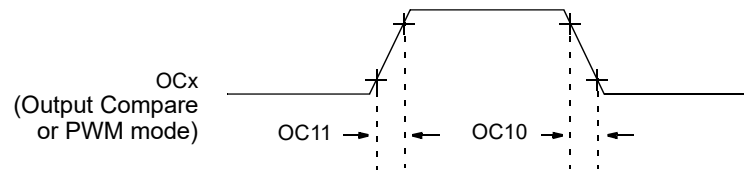

Note: Refer to Figure 31-1 for load conditions.

TABLE 31-26: OUTPUT COMPARE MODULE TIMING REQUIREMENTS

AC CHARACTERISTICS			Standard Operating Conditions: 2.3V to 3.6V (unless otherwise stated) Operating temperature -40°C ≤ TA ≤ +85°C for Industrial -40°C ≤ TA ≤ +105°C for V-temp				
Param. No.	**Symbol**	**Characteristics(1)**	**Min.**	**Typical(2)**	**Max.**	**Units**	**Conditions**
OC10	TCCF	OCx Output Fall Time	—	—	—	ns	See parameter DO32
OC11	TCCR	OCx Output Rise Time	—	—	—	ns	See parameter DO31

Note 1: These parameters are characterized, but not tested in manufacturing.

2: Data in "Typical" column is at 3.3V, 25°C unless otherwise stated. Parameters are for design guidance only and are not tested.

FIGURE 31-9: OCx/PWM MODULE TIMING CHARACTERISTICS

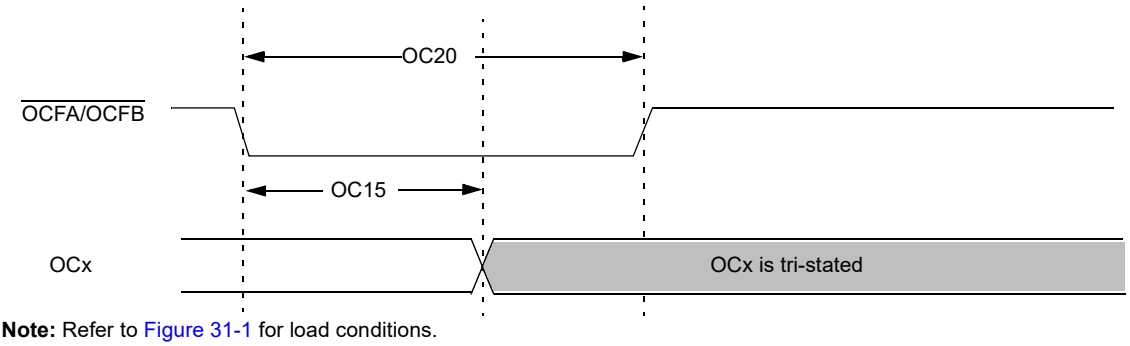

Note: Refer to Figure 31-1 for load conditions.

TABLE 31-27: SIMPLE OCx/PWM MODE TIMING REQUIREMENTS

AC CHARACTERISTICS			Standard Operating Conditions: 2.3V to 3.6V (unless otherwise stated) Operating temperature -40°C ≤ TA ≤ +85°C for Industrial -40°C ≤ TA ≤ +105°C for V-temp				
Param No.	**Symbol**	**Characteristics(1)**	**Min**	**Typical(2)**	**Max**	**Units**	**Conditions**
OC15	TFD	Fault Input to PWM I/O Change	—	—	50	ns	—
OC20	TFLT	Fault Input Pulse Width	50	—	—	ns	—

Note 1: These parameters are characterized, but not tested in manufacturing.

2: Data in "Typical" column is at 3.3V, 25°C unless otherwise stated. Parameters are for design guidance only and are not tested.

FIGURE 31-10: SPIx MODULE MASTER MODE (CKE = 0) TIMING CHARACTERISTICS

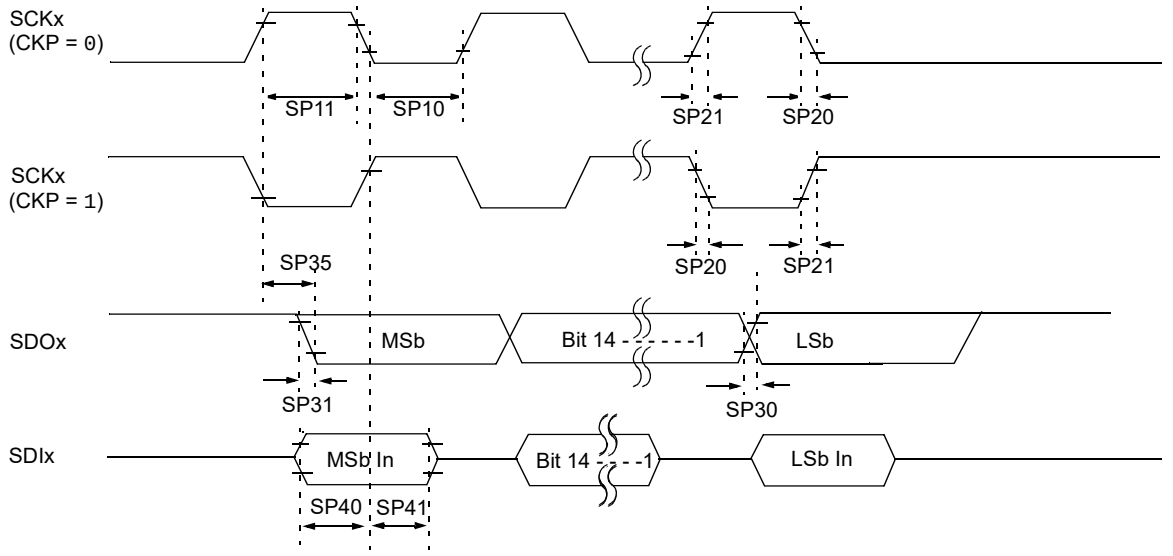

Note: Refer to Figure 31-1 for load conditions.

TABLE 31-28: SPIx MASTER MODE (CKE = 0) TIMING REQUIREMENTS

AC CHARACTERISTICS			Standard Operating Conditions: 2.3V to 3.6V (unless otherwise stated) Operating temperature -40°C ≤ TA ≤ +85°C for Industrial -40°C ≤ TA ≤ +105°C for V-temp				
Param. No.	**Symbol**	**Characteristics(1)**	**Min.**	**Typical(2)**	**Max.**	**Units**	**Conditions**
SP10	TscL	SCKx Output Low Time **(Note 3)**	Tsck/2	—	—	ns	—
SP11	TscH	SCKx Output High Time **(Note 3)**	Tsck/2	—	—	ns	—
SP20	TscF	SCKx Output Fall Time **(Note 4)**	—	—	—	ns	See parameter DO32
SP21	TscR	SCKx Output Rise Time **(Note 4)**	—	—	—	ns	See parameter DO31
SP30	TdoF	SDOx Data Output Fall Time **(Note 4)**	—	—	—	ns	See parameter DO32
SP31	TdoR	SDOx Data Output Rise Time **(Note 4)**	—	—	—	ns	See parameter DO31
SP35	TscH2doV, TscL2doV	SDOx Data Output Valid after SCKx Edge	—	—	15	ns	VDD > 2.7V
			—	—	20	ns	VDD < 2.7V
SP40	TdiV2scH, TdiV2scL	Setup Time of SDIx Data Input to SCKx Edge	10	—	—	ns	—
SP41	TscH2diL, TscL2diL	Hold Time of SDIx Data Input to SCKx Edge	10	—	—	ns	—

Note 1: These parameters are characterized, but not tested in manufacturing.

2: Data in “Typical” column is at 3.3V, 25°C unless otherwise stated. Parameters are for design guidance only and are not tested.

3: The minimum clock period for SCKx is 50 ns. Therefore, the clock generated in Master mode must not violate this specification.

4: Assumes 50 pF load on all SPIx pins.

© 2014-2019 Microchip Technology Inc.

FIGURE 31-11: SPIx MODULE MASTER MODE (CKE = 1) TIMING CHARACTERISTICS

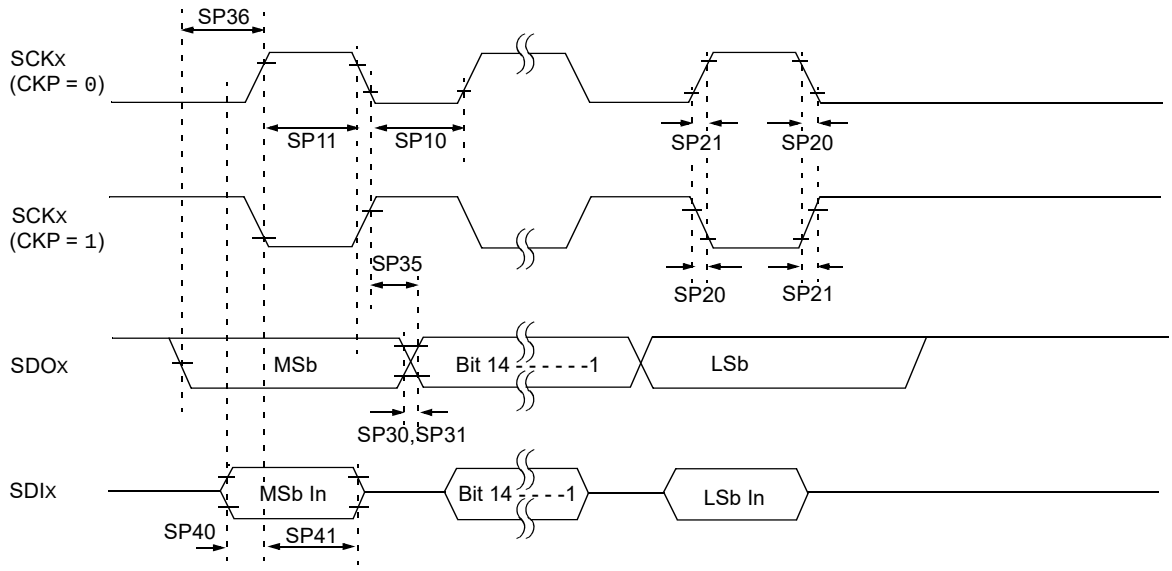

Note: Refer to Figure 31-1 for load conditions.

TABLE 31-29: SPIx MODULE MASTER MODE (CKE = 1) TIMING REQUIREMENTS

AC CHARACTERISTICS			Standard Operating Conditions: 2.3V to 3.6V (unless otherwise stated) Operating temperature -40°C ≤ TA ≤ +85°C for Industrial -40°C ≤ TA ≤ +105°C for V-temp				
Param. No.	**Symbol**	**Characteristics(1)**	**Min.**	**Typ.(2)**	**Max.**	**Units**	**Conditions**
SP10	TscL	SCKx Output Low Time **(Note 3)**	Tsck/2	—	—	ns	—
SP11	TscH	SCKx Output High Time **(Note 3)**	Tsck/2	—	—	ns	—
SP20	TscF	SCKx Output Fall Time **(Note 4)**	—	—	—	ns	See parameter DO32
SP21	TscR	SCKx Output Rise Time **(Note 4)**	—	—	—	ns	See parameter DO31
SP30	TdoF	SDOx Data Output Fall Time **(Note 4)**	—	—	—	ns	See parameter DO32
SP31	TdoR	SDOx Data Output Rise Time **(Note 4)**	—	—	—	ns	See parameter DO31
SP35	TscH2doV, TscL2doV	SDOx Data Output Valid after SCKx Edge	—	—	15	ns	VDD > 2.7V
			—	—	20	ns	VDD < 2.7V
SP36	TdoV2sc, TdoV2scL	SDOx Data Output Setup to First SCKx Edge	15	—	—	ns	—
SP40	TdiV2scH, TdiV2scL	Setup Time of SDIx Data Input to SCKx Edge	15	—	—	ns	VDD > 2.7V
			20	—	—	ns	VDD < 2.7V
SP41	TscH2diL, TscL2diL	Hold Time of SDIx Data Input to SCKx Edge	15	—	—	ns	VDD > 2.7V
			20	—	—	ns	VDD < 2.7V

Note 1: These parameters are characterized, but not tested in manufacturing.

2: Data in "Typical" column is at 3.3V, 25°C unless otherwise stated. Parameters are for design guidance only and are not tested.

3: The minimum clock period for SCKx is 50 ns. Therefore, the clock generated in Master mode must not violate this specification.

4: Assumes 50 pF load on all SPIx pins.

FIGURE 31-12: SPIx MODULE SLAVE MODE (CKE = 0) TIMING CHARACTERISTICS

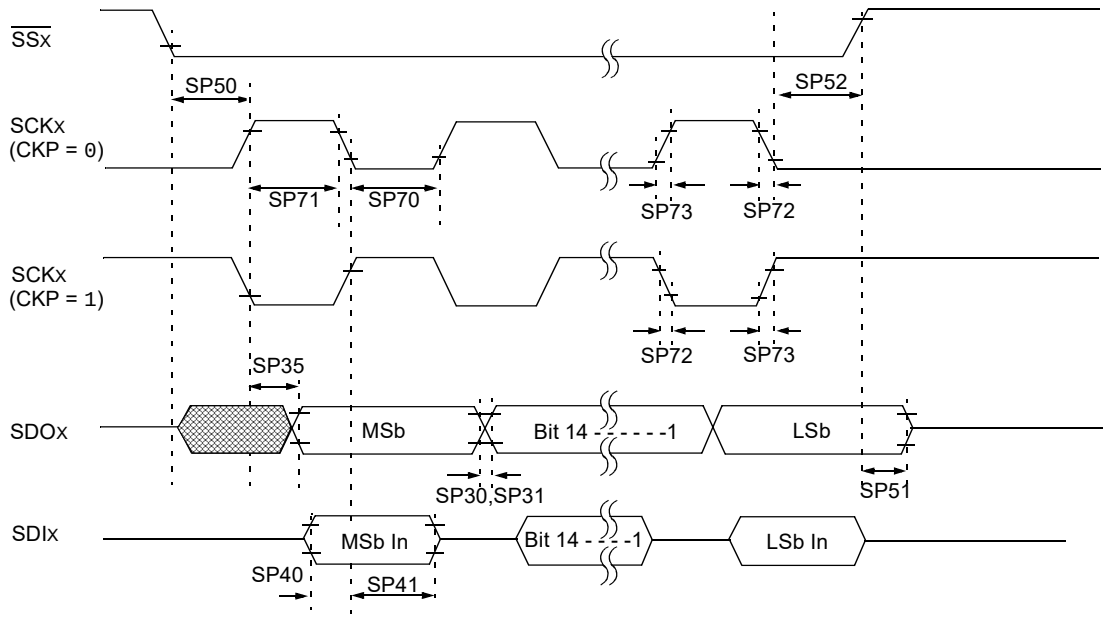

Note: Refer to Figure 31-1 for load conditions.

TABLE 31-30: SPIx MODULE SLAVE MODE (CKE = 0) TIMING REQUIREMENTS

AC CHARACTERISTICS			Standard Operating Conditions: 2.3V to 3.6V (unless otherwise stated) Operating temperature -40°C ≤ TA ≤ +85°C for Industrial -40°C ≤ TA ≤ +105°C for V-temp				
Param. No.	**Symbol**	**Characteristics(1)**	**Min.**	**Typ.(2)**	**Max.**	**Units**	**Conditions**
SP70	TscL	SCKx Input Low Time **(Note 3)**	Tsck/2	—	—	ns	—
SP71	TscH	SCKx Input High Time **(Note 3)**	Tsck/2	—	—	ns	—
SP72	TscF	SCKx Input Fall Time	—	—	—	ns	See parameter DO32
SP73	TscR	SCKx Input Rise Time	—	—	—	ns	See parameter DO31
SP30	TdoF	SDOx Data Output Fall Time **(Note 4)**	—	—	—	ns	See parameter DO32
SP31	TdoR	SDOx Data Output Rise Time **(Note 4)**	—	—	—	ns	See parameter DO31
SP35	TscH2doV, TscL2doV	SDOx Data Output Valid after SCKx Edge	—	—	15	ns	VDD > 2.7V
			—	—	20	ns	VDD < 2.7V
SP40	TdiV2scH, TdiV2scL	Setup Time of SDIx Data Input to SCKx Edge	10	—	—	ns	—
SP41	TscH2diL, TscL2diL	Hold Time of SDIx Data Input to SCKx Edge	10	—	—	ns	—
SP50	TssL2scH, TssL2scL	$\overline{SSx}$ ↓ to SCKx ↑ or SCKx Input	175	—	—	ns	—
SP51	TssH2doZ	$\overline{SSx}$ ↑ to SDOx Output High-Impedance **(Note 3)**	5	—	25	ns	—
SP52	TscH2ssH TscL2ssH	$\overline{SSx}$ after SCKx Edge	Tsck + 20	—	—	ns	—

Note 1: These parameters are characterized, but not tested in manufacturing.

2: Data in "Typical" column is at 3.3V, 25°C unless otherwise stated. Parameters are for design guidance only and are not tested.

3: The minimum clock period for SCKx is 50 ns.

4: Assumes 50 pF load on all SPIx pins.

© 2014-2019 Microchip Technology Inc.

FIGURE 31-13: SPIx MODULE SLAVE MODE (CKE = 1) TIMING CHARACTERISTICS

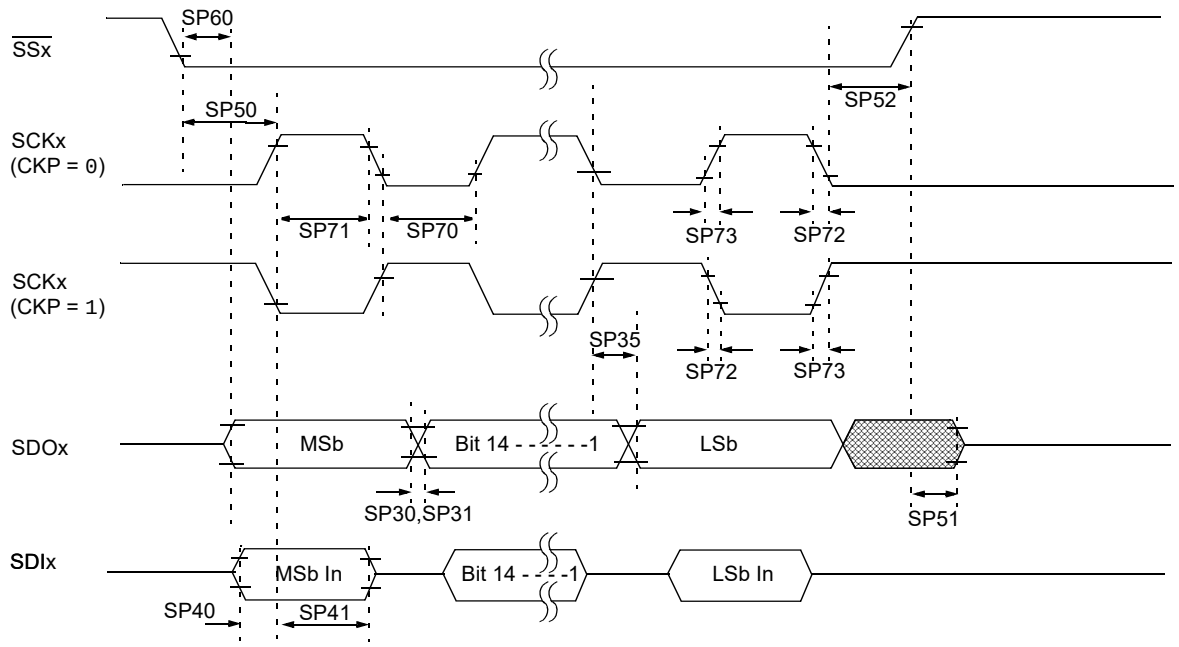

Note: Refer to Figure 31-1 for load conditions.

TABLE 31-31: SPIx MODULE SLAVE MODE (CKE = 1) TIMING REQUIREMENTS

AC CHARACTERISTICS			Standard Operating Conditions: 2.3V to 3.6V (unless otherwise stated) Operating temperature -40°C ≤ TA ≤ +85°C for Industrial -40°C ≤ TA ≤ +105°C for V-temp				
Param. No.	**Symbol**	**Characteristics(1)**	**Min.**	**Typical(2)**	**Max.**	**Units**	**Conditions**
SP70	TscL	SCKx Input Low Time **(Note 3)**	Tsck/2	—	—	ns	—
SP71	TscH	SCKx Input High Time **(Note 3)**	Tsck/2	—	—	ns	—
SP72	TscF	SCKx Input Fall Time	—	5	10	ns	—
SP73	TscR	SCKx Input Rise Time	—	5	10	ns	—
SP30	TdoF	SDOx Data Output Fall Time **(Note 4)**	—	—	—	ns	See parameter DO32
SP31	TdoR	SDOx Data Output Rise Time **(Note 4)**	—	—	—	ns	See parameter DO31
SP35	TscH2doV, TscL2doV	SDOx Data Output Valid after SCKx Edge	—	—	20	ns	VDD > 2.7V
			—	—	30	ns	VDD < 2.7V
SP40	TdiV2scH, TdiV2scL	Setup Time of SDIx Data Input to SCKx Edge	10	—	—	ns	—
SP41	TscH2diL, TscL2diL	Hold Time of SDIx Data Input to SCKx Edge	10	—	—	ns	—
SP50	TssL2scH, TssL2scL	$\overline{SSx}$ ↓ to SCKx ↓ or SCKx ↑ Input	175	—	—	ns	—

Note 1: These parameters are characterized, but not tested in manufacturing.

2: Data in "Typical" column is at 3.3V, 25°C unless otherwise stated. Parameters are for design guidance only and are not tested.

3: The minimum clock period for SCKx is 50 ns.

4: Assumes 50 pF load on all SPIx pins.

TABLE 31-31: SPIx MODULE SLAVE MODE (CKE = 1) TIMING REQUIREMENTS (CONTINUED)

AC CHARACTERISTICS			Standard Operating Conditions: 2.3V to 3.6V (unless otherwise stated) Operating temperature -40°C ≤ TA ≤ +85°C for Industrial -40°C ≤ TA ≤ +105°C for V-temp				
Param. No.	**Symbol**	**Characteristics(1)**	**Min.**	**Typical(2)**	**Max.**	**Units**	**Conditions**
SP51	TSSH2DOZ	$\overline{SSx}$ ↑ to SDOx Output High-Impedance **(Note 4)**	5	—	25	ns	—
SP52	TSCH2SSH TSCL2SSH	$\overline{SSx}$ ↑ after SCKx Edge	TSCK + 20	—	—	ns	—
SP60	TSSL2DOV	SDOx Data Output Valid after $\overline{SSx}$ Edge	—	—	25	ns	—

Note 1: These parameters are characterized, but not tested in manufacturing.

2: Data in “Typical” column is at 3.3V, 25°C unless otherwise stated. Parameters are for design guidance only and are not tested.

3: The minimum clock period for SCKx is 50 ns.

4: Assumes 50 pF load on all SPIx pins.

© 2014-2019 Microchip Technology Inc.

FIGURE 31-14: I2Cx BUS START/STOP BITS TIMING CHARACTERISTICS (MASTER MODE)

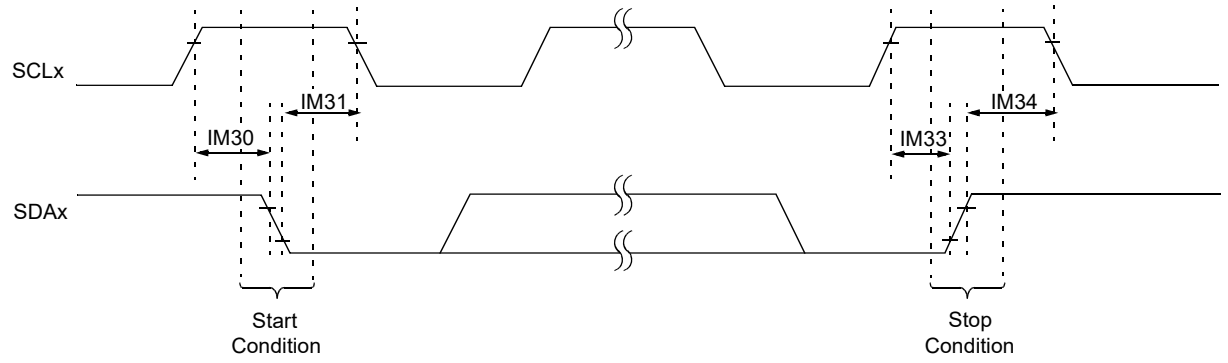

Note: Refer to Figure 31-1 for load conditions.

FIGURE 31-15: I2Cx BUS DATA TIMING CHARACTERISTICS (MASTER MODE)

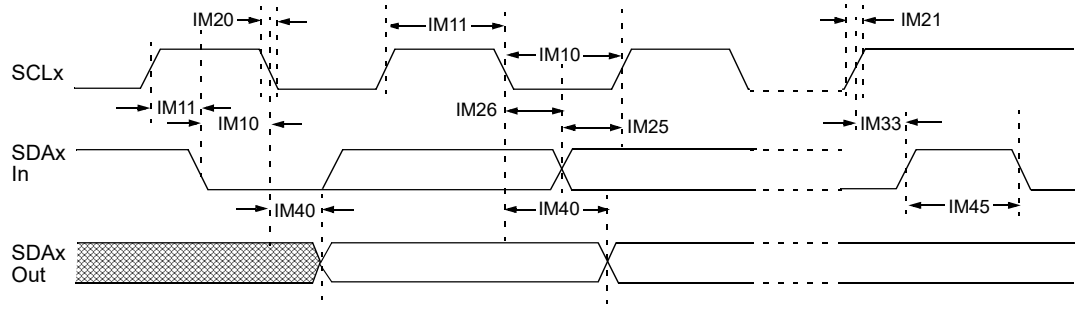

Note: Refer to Figure 31-1 for load conditions.

TABLE 31-32: I2Cx BUS DATA TIMING REQUIREMENTS (MASTER MODE)

AC CHARACTERISTICS				Standard Operating Conditions: 2.3V to 3.6V (unless otherwise stated) Operating temperature -40°C ≤ TA ≤ +85°C for Industrial -40°C ≤ TA ≤ +105°C for V-temp			
Param. No.	**Symbol**	**Characteristics**		**Min.(1)**	**Max.**	**Units**	**Conditions**
IM10	TLO:SCL	Clock Low Time	100 kHz mode	TPB * (BRG + 2)	—	μs	—
			400 kHz mode	TPB * (BRG + 2)	—	μs	—
			1 MHz mode **(Note 2)**	TPB * (BRG + 2)	—	μs	—
IM11	THI:SCL	Clock High Time	100 kHz mode	TPB * (BRG + 2)	—	μs	—
			400 kHz mode	TPB * (BRG + 2)	—	μs	—
			1 MHz mode **(Note 2)**	TPB * (BRG + 2)	—	μs	—
IM20	TF:SCL	SDAx and SCLx Fall Time	100 kHz mode	—	300	ns	CB is specified to be from 10 to 400 pF
			400 kHz mode	20 + 0.1 CB	300	ns	
			1 MHz mode **(Note 2)**	—	100	ns	
IM21	TR:SCL	SDAx and SCLx Rise Time	100 kHz mode	—	1000	ns	CB is specified to be from 10 to 400 pF
			400 kHz mode	20 + 0.1 CB	300	ns	
			1 MHz mode **(Note 2)**	—	300	ns	
IM25	TSU:DAT	Data Input Setup Time	100 kHz mode	250	—	ns	—
			400 kHz mode	100	—	ns	
			1 MHz mode **(Note 2)**	100	—	ns	
IM26	THD:DAT	Data Input Hold Time	100 kHz mode	0	—	μs	—
			400 kHz mode	0	0.9	μs	
			1 MHz mode **(Note 2)**	0	0.3	μs	
IM30	TSU:STA	Start Condition Setup Time	100 kHz mode	TPB * (BRG + 2)	—	μs	Only relevant for Repeated Start condition
			400 kHz mode	TPB * (BRG + 2)	—	μs	
			1 MHz mode **(Note 2)**	TPB * (BRG + 2)	—	μs	
IM31	THD:STA	Start Condition Hold Time	100 kHz mode	TPB * (BRG + 2)	—	μs	After this period, the first clock pulse is generated
			400 kHz mode	TPB * (BRG + 2)	—	μs	
			1 MHz mode **(Note 2)**	TPB * (BRG + 2)	—	μs	
IM33	TSU:STO	Stop Condition Setup Time	100 kHz mode	TPB * (BRG + 2)	—	μs	—
			400 kHz mode	TPB * (BRG + 2)	—	μs	
			1 MHz mode **(Note 2)**	TPB * (BRG + 2)	—	μs	
IM34	THD:STO	Stop Condition Hold Time	100 kHz mode	TPB * (BRG + 2)	—	ns	—
			400 kHz mode	TPB * (BRG + 2)	—	ns	
			1 MHz mode **(Note 2)**	TPB * (BRG + 2)	—	ns	

Note 1: BRG is the value of the I^2C Baud Rate Generator.

2: Maximum pin capacitance = 10 pF for all I2Cx pins (for 1 MHz mode only).

3: The typical value for this parameter is 104 ns.

© 2014-2019 Microchip Technology Inc.

TABLE 31-32: I2Cx BUS DATA TIMING REQUIREMENTS (MASTER MODE) (CONTINUED)

AC CHARACTERISTICS				Standard Operating Conditions: 2.3V to 3.6V (unless otherwise stated) Operating temperature -40°C ≤ TA ≤ +85°C for Industrial -40°C ≤ TA ≤ +105°C for V-temp			
Param. No.	**Symbol**	**Characteristics**		**Min.(1)**	**Max.**	**Units**	**Conditions**
IM40	TAA:SCL	Output Valid from Clock	100 kHz mode	—	3500	ns	—
			400 kHz mode	—	1000	ns	—
			1 MHz mode **(Note 2)**	—	350	ns	—
IM45	TBF:SDA	Bus Free Time	100 kHz mode	4.7	—	μs	The amount of time the bus must be free before a new transmission can start
			400 kHz mode	1.3	—	μs	
			1 MHz mode **(Note 2)**	0.5	—	μs	
IM50	CB	Bus Capacitive Loading		—	400	pF	—
IM51	TPGD	Pulse Gobbler Delay		52	312	ns	See **Note 3**

Note 1: BRG is the value of the I^2C Baud Rate Generator.

2: Maximum pin capacitance = 10 pF for all I2Cx pins (for 1 MHz mode only).

3: The typical value for this parameter is 104 ns.

FIGURE 31-16: I2Cx BUS START/STOP BITS TIMING CHARACTERISTICS (SLAVE MODE)

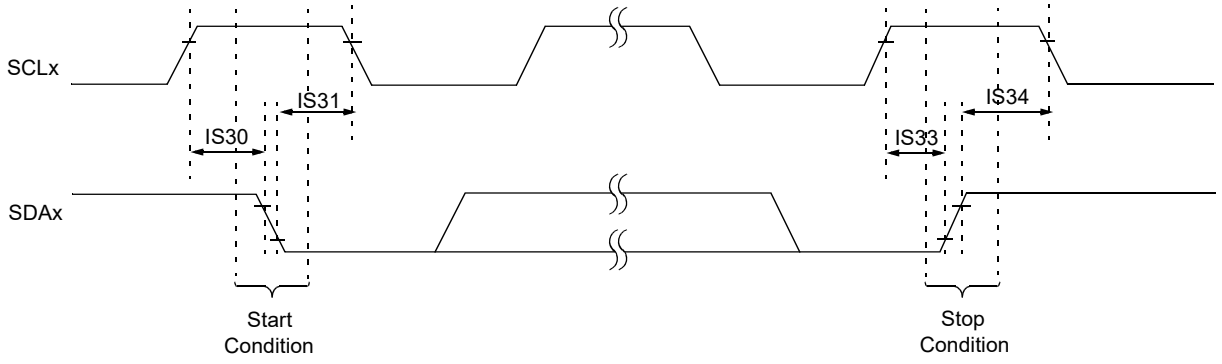

Note: Refer to Figure 31-1 for load conditions.

FIGURE 31-17: I2Cx BUS DATA TIMING CHARACTERISTICS (SLAVE MODE)

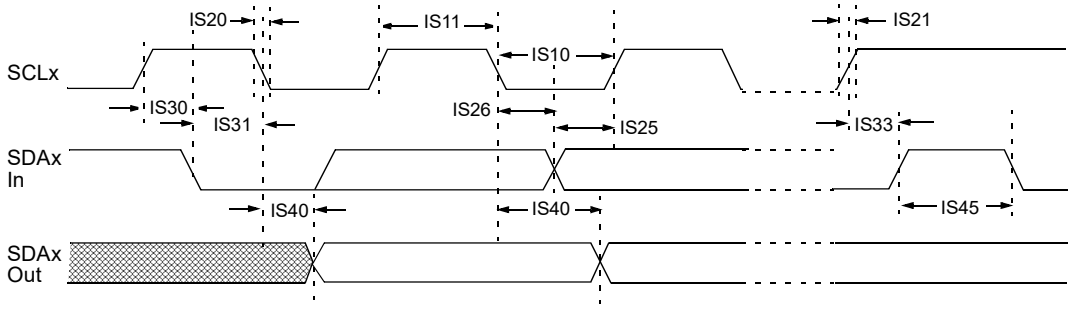

Note: Refer to Figure 31-1 for load conditions.

© 2014-2019 Microchip Technology Inc.

TABLE 31-33: I2Cx BUS DATA TIMING REQUIREMENTS (SLAVE MODE)

AC CHARACTERISTICS				Standard Operating Conditions: 2.3V to 3.6V (unless otherwise stated) Operating temperature -40°C ≤ TA ≤ +85°C for Industrial -40°C ≤ TA ≤ +105°C for V-temp			
Param. No.	**Symbol**	**Characteristics**		**Min.**	**Max.**	**Units**	**Conditions**
IS10	TLO:SCL	Clock Low Time	100 kHz mode	4.7	—	μs	PBCLK must operate at a minimum of 800 kHz
			400 kHz mode	1.3	—	μs	PBCLK must operate at a minimum of 3.2 MHz
			1 MHz mode **(Note 1)**	0.5	—	μs	—
IS11	THI:SCL	Clock High Time	100 kHz mode	4.0	—	μs	PBCLK must operate at a minimum of 800 kHz
			400 kHz mode	0.6	—	μs	PBCLK must operate at a minimum of 3.2 MHz
			1 MHz mode **(Note 1)**	0.5	—	μs	—
IS20	TF:SCL	SDAx and SCLx Fall Time	100 kHz mode	—	300	ns	CB is specified to be from 10 to 400 pF
			400 kHz mode	20 + 0.1 CB	300	ns	
			1 MHz mode **(Note 1)**	—	100	ns	
IS21	TR:SCL	SDAx and SCLx Rise Time	100 kHz mode	—	1000	ns	CB is specified to be from 10 to 400 pF
			400 kHz mode	20 + 0.1 CB	300	ns	
			1 MHz mode **(Note 1)**	—	300	ns	
IS25	TSU:DAT	Data Input Setup Time	100 kHz mode	250	—	ns	—
			400 kHz mode	100	—	ns	
			1 MHz mode **(Note 1)**	100	—	ns	
IS26	THD:DAT	Data Input Hold Time	100 kHz mode	0	—	ns	—
			400 kHz mode	0	0.9	μs	
			1 MHz mode **(Note 1)**	0	0.3	μs	
IS30	TSU:STA	Start Condition Setup Time	100 kHz mode	4700	—	ns	Only relevant for Repeated Start condition
			400 kHz mode	600	—	ns	
			1 MHz mode **(Note 1)**	250	—	ns	
IS31	THD:STA	Start Condition Hold Time	100 kHz mode	4000	—	ns	After this period, the first clock pulse is generated
			400 kHz mode	600	—	ns	
			1 MHz mode **(Note 1)**	250	—	ns	
IS33	TSU:STO	Stop Condition Setup Time	100 kHz mode	4000	—	ns	—
			400 kHz mode	600	—	ns	
			1 MHz mode **(Note 1)**	600	—	ns	

Note 1: Maximum pin capacitance = 10 pF for all I2Cx pins (for 1 MHz mode only).

TABLE 31-33: I2Cx BUS DATA TIMING REQUIREMENTS (SLAVE MODE) (CONTINUED)

AC CHARACTERISTICS				Standard Operating Conditions: 2.3V to 3.6V (unless otherwise stated) Operating temperature -40°C ≤ TA ≤ +85°C for Industrial -40°C ≤ TA ≤ +105°C for V-temp			
Param. No.	**Symbol**	**Characteristics**		**Min.**	**Max.**	**Units**	**Conditions**
IS34	THD:STO	Stop Condition Hold Time	100 kHz mode	4000	—	ns	—
			400 kHz mode	600	—	ns	
			1 MHz mode **(Note 1)**	250		ns	
IS40	TAA:SCL	Output Valid from Clock	100 kHz mode	0	3500	ns	—
			400 kHz mode	0	1000	ns	
			1 MHz mode **(Note 1)**	0	350	ns	
IS45	TBF:SDA	Bus Free Time	100 kHz mode	4.7	—	μs	The amount of time the bus must be free before a new transmission can start
			400 kHz mode	1.3	—	μs	
			1 MHz mode **(Note 1)**	0.5	—	μs	
IS50	CB	Bus Capacitive Loading		—	400	pF	—

Note 1: Maximum pin capacitance = 10 pF for all I2Cx pins (for 1 MHz mode only).

© 2014-2019 Microchip Technology Inc.

TABLE 31-34: ADC MODULE SPECIFICATIONS

AC CHARACTERISTICS			Standard Operating Conditions (see Note 5): 2.5V to 3.6V (unless otherwise stated) Operating temperature -40°C ≤ TA ≤ +85°C for Industrial -40°C ≤ TA ≤ +105°C for V-temp				
Param. No.	**Symbol**	**Characteristics**	**Min.**	**Typical**	**Max.**	**Units**	**Conditions**
Device Supply							
AD01	AVDD	Module VDD Supply	Greater of VDD – 0.3 or 2.5	—	Lesser of VDD + 0.3 or 3.6	V	—
AD02	AVSS	Module VSS Supply	VSS	—	AVDD	V	**(Note 1)**
Reference Inputs							
AD05 AD05a	VREFH	Reference Voltage High	AVSS + 2.0 2.5	— —	AVDD 3.6	V V	**(Note 1)** VREFH = AVDD **(Note 3)**
AD06	VREFL	Reference Voltage Low	AVSS	—	VREFH – 2.0	V	**(Note 1)**
AD07	VREF	Absolute Reference Voltage (VREFH – VREFL)	2.0	—	AVDD	V	**(Note 3)**
AD08 AD08a	IREF	Current Drain	— —	250 —	400 3	μA μA	ADC operating ADC off
Analog Input							
AD12	VINH-VINL	Full-Scale Input Span	VREFL	—	VREFH	V	—
AD13	VINL	Absolute VINL Input Voltage	AVSS – 0.3	—	AVDD/2	V	—
AD14	VIN	Absolute Input Voltage	AVSS – 0.3	—	AVDD + 0.3	V	—
AD15	—	Leakage Current	—	±0.001	±0.610	μA	VINL = AVSS = VREFL = 0V, AVDD = VREFH = 3.3V Source Impedance = 10 kΩ
AD17	RIN	Recommended Impedance of Analog Voltage Source	—	—	5k	Ω	**(Note 1)**
ADC Accuracy – Measurements with External VREF+/VREF-							
AD20c	Nr	Resolution	10 data bits			bits	—
AD21c	INL	Integral Non-linearity	> -1	—	< 1	LSb	VINL = AVSS = VREFL = 0V, AVDD = VREFH = 3.3V
AD22c	DNL	Differential Non-linearity	> -1	—	< 1	LSb	VINL = AVSS = VREFL = 0V, AVDD = VREFH = 3.3V **(Note 2)**
AD23c	GERR	Gain Error	> -1	—	< 1	LSb	VINL = AVSS = VREFL = 0V, AVDD = VREFH = 3.3V
AD24c	EOFF	Offset Error	> -1	—	< 1	Lsb	VINL = AVSS = 0V, AVDD = 3.3V
AD25c	—	Monotonicity	—	—	—	—	Guaranteed

Note 1: These parameters are not characterized or tested in manufacturing.

2: With no missing codes.

3: These parameters are characterized, but not tested in manufacturing.

4: Characterized with a 1 kHz sine wave.

5: The ADC module is functional at VBORMIN < VDD < 2.5V, but with degraded performance. Unless otherwise stated, module functionality is tested, but not characterized.

TABLE 31-34: ADC MODULE SPECIFICATIONS (CONTINUED)

AC CHARACTERISTICS			Standard Operating Conditions (see Note 5): 2.5V to 3.6V (unless otherwise stated) Operating temperature -40°C ≤ TA ≤ +85°C for Industrial -40°C ≤ TA ≤ +105°C for V-temp				
Param. No.	**Symbol**	**Characteristics**	**Min.**	**Typical**	**Max.**	**Units**	**Conditions**
ADC Accuracy – Measurements with Internal VREF+/VREF-							
AD20d	Nr	Resolution	10 data bits			bits	**(Note 3)**
AD21d	INL	Integral Non-linearity	> -1	—	< 1	LSb	VINL = AVSS = 0V, AVDD = 2.5V to 3.6V **(Note 3)**
AD22d	DNL	Differential Non-linearity	> -1	—	< 1	LSb	VINL = AVSS = 0V, AVDD = 2.5V to 3.6V **(Notes 2,3)**
AD23d	GERR	Gain Error	> -4	—	< 4	LSb	VINL = AVSS = 0V, AVDD = 2.5V to 3.6V **(Note 3)**
AD24d	EOFF	Offset Error	> -2	—	< 2	Lsb	VINL = AVSS = 0V, AVDD = 2.5V to 3.6V **(Note 3)**
AD25d	—	Monotonicity	—	—	—	—	Guaranteed
Dynamic Performance							
AD32b	SINAD	Signal to Noise and Distortion	55	58.5	—	dB	**(Notes 3,4)**
AD34b	ENOB	Effective Number of bits	9.0	9.5	—	bits	**(Notes 3,4)**

Note 1: These parameters are not characterized or tested in manufacturing.

2: With no missing codes.

3: These parameters are characterized, but not tested in manufacturing.

4: Characterized with a 1 kHz sine wave.

5: The ADC module is functional at VBORMIN < VDD < 2.5V, but with degraded performance. Unless otherwise stated, module functionality is tested, but not characterized.

© 2014-2019 Microchip Technology Inc.

TABLE 31-35: 10-BIT CONVERSION RATE PARAMETERS

AC CHARACTERISTICS(2)			Standard Operating Conditions (see Note 3): 2.5V to 3.6V (unless otherwise stated) Operating temperature -40°C ≤ TA ≤ +85°C for Industrial -40°C ≤ TA ≤ +105°C for V-temp		
ADC Speed	**TAD Min.**	**Sampling Time Min.**	**RS Max.**	**VDD**	**ADC Channels Configuration**
1 Msps to 400 ksps(1)	65 ns	132 ns	500Ω	3.0V to 3.6V	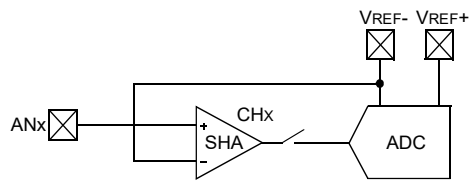
Up to 400 ksps	200 ns	200 ns	5.0 kΩ	2.5V to 3.6V	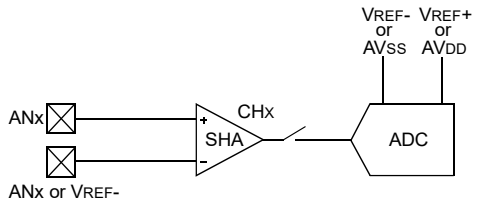

Note 1: External VREF- and VREF+ pins must be used for correct operation.

2: These parameters are characterized, but not tested in manufacturing.

3: The ADC module is functional at VBORMIN < VDD < 2.5V, but with degraded performance. Unless otherwise stated, module functionality is tested, but not characterized.

TABLE 31-36: ANALOG-TO-DIGITAL CONVERSION TIMING REQUIREMENTS

AC CHARACTERISTICS			Standard Operating Conditions (see Note 4): 2.5V to 3.6V (unless otherwise stated) Operating temperature -40°C ≤ TA ≤ +85°C for Industrial -40°C ≤ TA ≤ +105°C for V-temp				
Param. No.	**Symbol**	**Characteristics**	**Min.**	**Typical(1)**	**Max.**	**Units**	**Conditions**
Clock Parameters							
AD50	TAD	ADC Clock Period(2)	65	—	—	ns	See Table 31-35
Conversion Rate							
AD55	TCONV	Conversion Time	—	12 TAD	—	—	—
AD56	FCNV	Throughput Rate (Sampling Speed)	—	—	1000	ksps	AVDD = 3.0V to 3.6V
			—	—	400	ksps	AVDD = 2.5V to 3.6V
AD57	TSAMP	Sample Time	1 TAD	—	—	—	TSAMP must be ≥ 132 ns
Timing Parameters							
AD60	TPCS	Conversion Start from Sample Trigger(3)	—	1.0 TAD	—	—	Auto-Convert Trigger (SSRC<2:0> = 111) not selected
AD61	TPSS	Sample Start from Setting Sample (SAMP) bit	0.5 TAD	—	1.5 TAD	—	—
AD62	TCSS	Conversion Completion to Sample Start (ASAM = 1)(3)	—	0.5 TAD	—	—	—
AD63	TDPU	Time to Stabilize Analog Stage from ADC Off to ADC On(3)	—	—	2	µs	—

Note 1: These parameters are characterized, but not tested in manufacturing.

2: Because the sample caps will eventually lose charge, clock rates below 10 kHz can affect linearity performance, especially at elevated temperatures.

3: Characterized by design but not tested.

4: The ADC module is functional at VBORMIN < VDD < 2.5V, but with degraded performance. Unless otherwise stated, module functionality is tested, but not characterized.

© 2014-2019 Microchip Technology Inc.

FIGURE 31-18: ANALOG-TO-DIGITAL CONVERSION (10-BIT MODE) TIMING CHARACTERISTICS (ASAM = 0, SSRC<2:0> = 000)

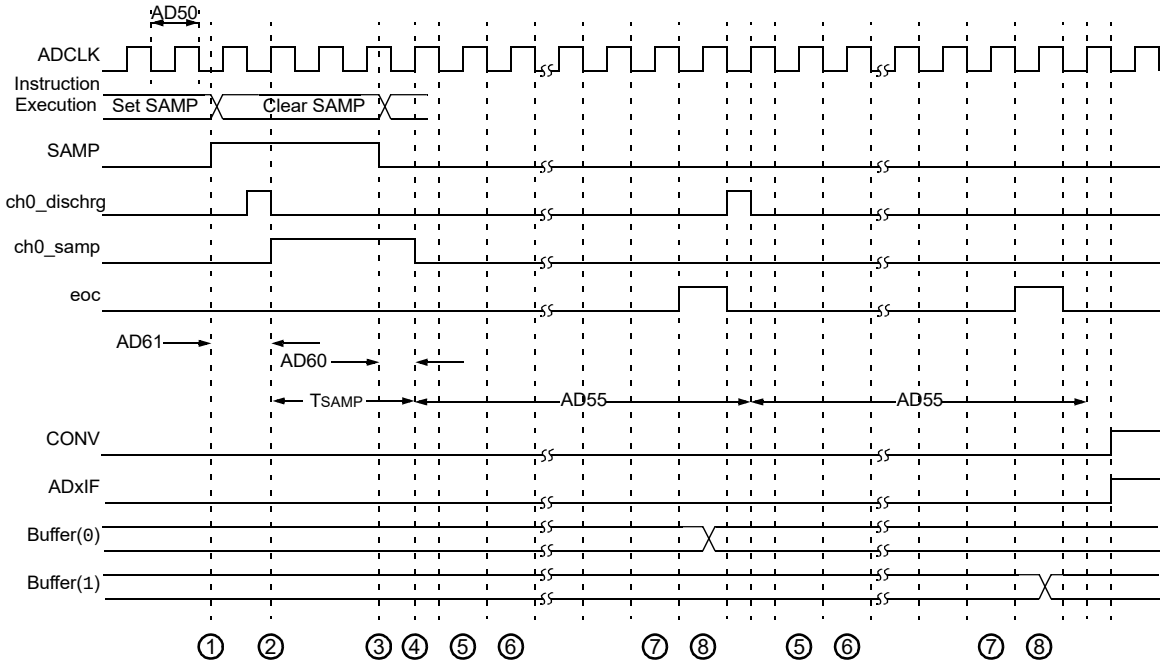

① – Software sets ADxCON. SAMP to start sampling.

② – Sampling starts after discharge period. TSAMP is described in **Section 17. "10-bit Analog-to-Digital Converter (ADC)"** (DS60001104) in the *"PIC32 Family Reference Manual"*.

③ – Software clears ADxCON. SAMP to start conversion.

④ – Sampling ends, conversion sequence starts.

⑤ – Convert bit 9.

⑥ – Convert bit 8.

⑦ – Convert bit 0.

⑧ – One TAD for end of conversion.

FIGURE 31-19: ANALOG-TO-DIGITAL CONVERSION (10-BIT MODE) TIMING CHARACTERISTICS (ASAM = 1, SSRC<2:0> = 111, SAMC<4:0> = 00001)

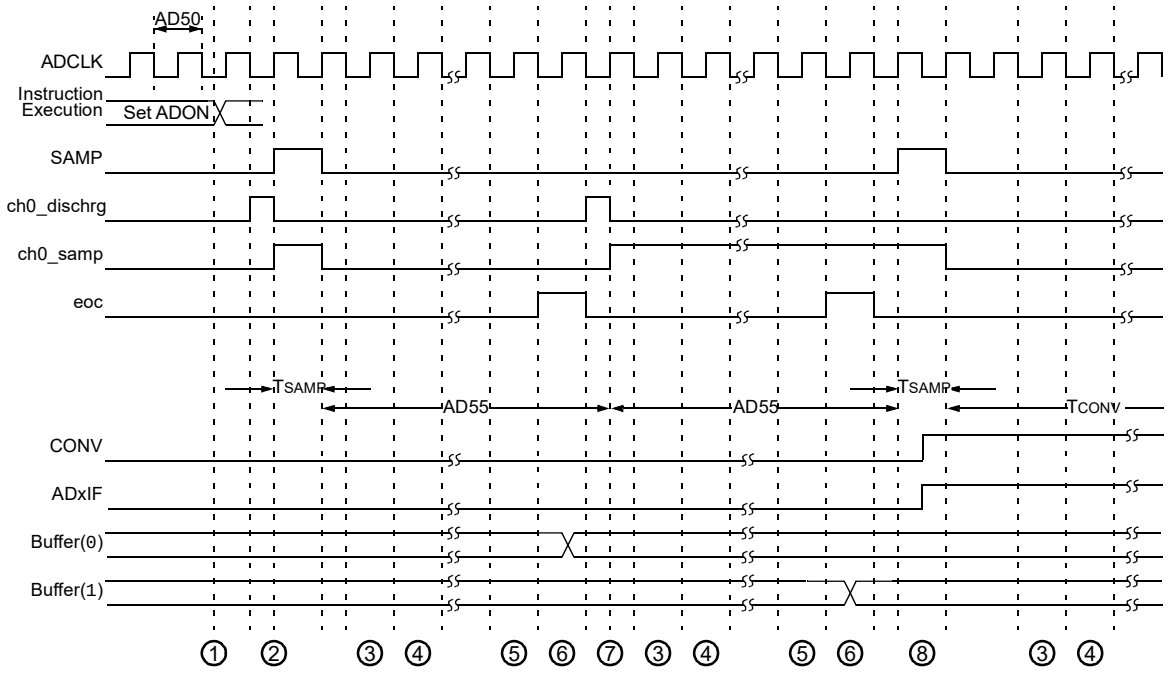

1 – Software sets ADxCON. ADON to start AD operation.

2 – Sampling starts after discharge period. TSAMP is described in **Section 17. "10-bit Analog-to-Digital Converter (ADC)"** (DS60001104).

3 – Convert bit 9.

4 – Convert bit 8.

5 – Convert bit 0.

6 – One TAD for end of conversion.

7 – Begin conversion of next channel.

8 – Sample for time specified by SAMC<4:0>.

© 2014-2019 Microchip Technology Inc.

FIGURE 31-20: PARALLEL SLAVE PORT TIMING

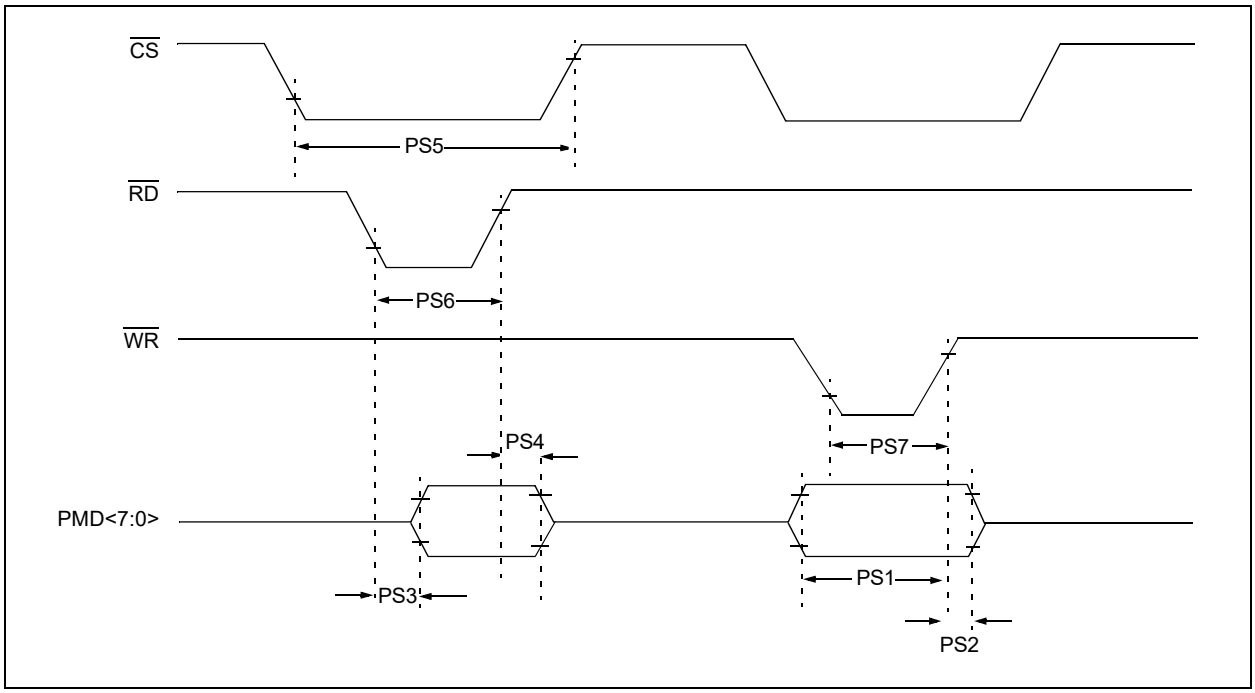

TABLE 31-37: PARALLEL SLAVE PORT REQUIREMENTS

AC CHARACTERISTICS			Standard Operating Conditions: 2.3V to 3.6V (unless otherwise stated) Operating temperature -40°C ≤ TA ≤ +85°C for Industrial -40°C ≤ TA ≤ +105°C for V-temp				
Param.No.	**Symbol**	**Characteristics(1)**	**Min.**	**Typ.**	**Max.**	**Units**	**Conditions**
PS1	TdtV2wrH	Data In Valid before $\overline{WR}$ or $\overline{CS}$ Inactive (setup time)	20	—	—	ns	—
PS2	TwrH2dtI	$\overline{WR}$ or $\overline{CS}$ Inactive to Data-In Invalid (hold time)	40	—	—	ns	—
PS3	TrdL2dtV	$\overline{RD}$ and $\overline{CS}$ Active to Data-Out Valid	—	—	60	ns	—
PS4	TrdH2dtI	$\overline{RD}$ Active or $\overline{CS}$ Inactive to Data-Out Invalid	0	—	10	ns	—
PS5	Tcs	$\overline{CS}$ Active Time	TPB + 40	—	—	ns	—
PS6	TWR	$\overline{WR}$ Active Time	TPB + 25	—	—	ns	—
PS7	TRD	$\overline{RD}$ Active Time	TPB + 25	—	—	ns	—

Note 1: These parameters are characterized, but not tested in manufacturing.

FIGURE 31-21: PARALLEL MASTER PORT READ TIMING DIAGRAM

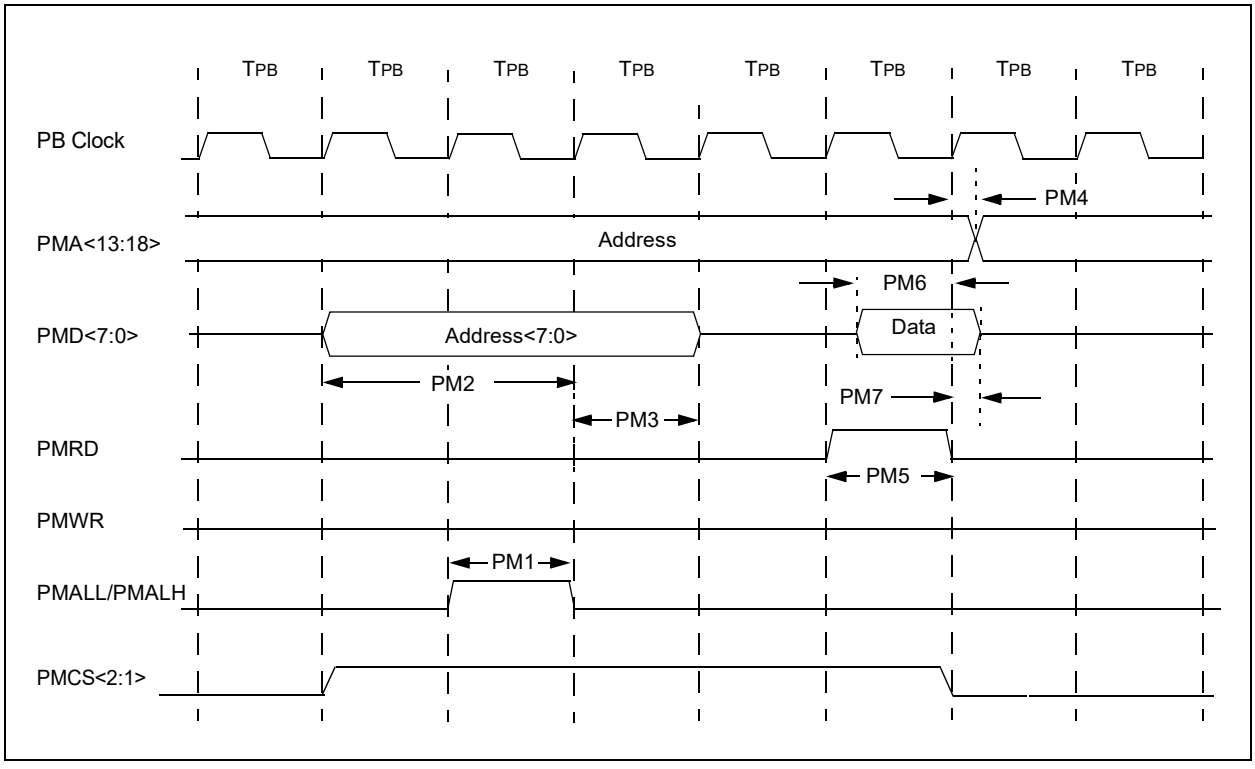

© 2014-2019 Microchip Technology Inc.

TABLE 31-38: PARALLEL MASTER PORT READ TIMING REQUIREMENTS

AC CHARACTERISTICS			Standard Operating Conditions: 2.3V to 3.6V (unless otherwise stated) Operating temperature -40°C ≤ TA ≤ +85°C for Industrial -40°C ≤ TA ≤ +105°C for V-temp				
Param. No.	**Symbol**	**Characteristics(1)**	**Min.**	**Typ.**	**Max.**	**Units**	**Conditions**
PM1	TLAT	PMALL/PMALH Pulse Width	—	1 TPB	—	—	—
PM2	TADSU	Address Out Valid to PMALL/ PMALH Invalid (address setup time)	—	2 TPB	—	—	—
PM3	TADHOLD	PMALL/PMALH Invalid to Address Out Invalid (address hold time)	—	1 TPB	—	—	—
PM4	TAHOLD	PMRD Inactive to Address Out Invalid (address hold time)	5	—	—	ns	—
PM5	TRD	PMRD Pulse Width	—	1 TPB	—	—	—
PM6	TDSU	PMRD or PMENB Active to Data In Valid (data setup time)	15	—	—	ns	—
PM7	TDHOLD	PMRD or PMENB Inactive to Data In Invalid (data hold time)	1TPB-CLK	—	—	ns	PMP PBCLK

Note 1: These parameters are characterized, but not tested in manufacturing.

FIGURE 31-22: PARALLEL MASTER PORT WRITE TIMING DIAGRAM

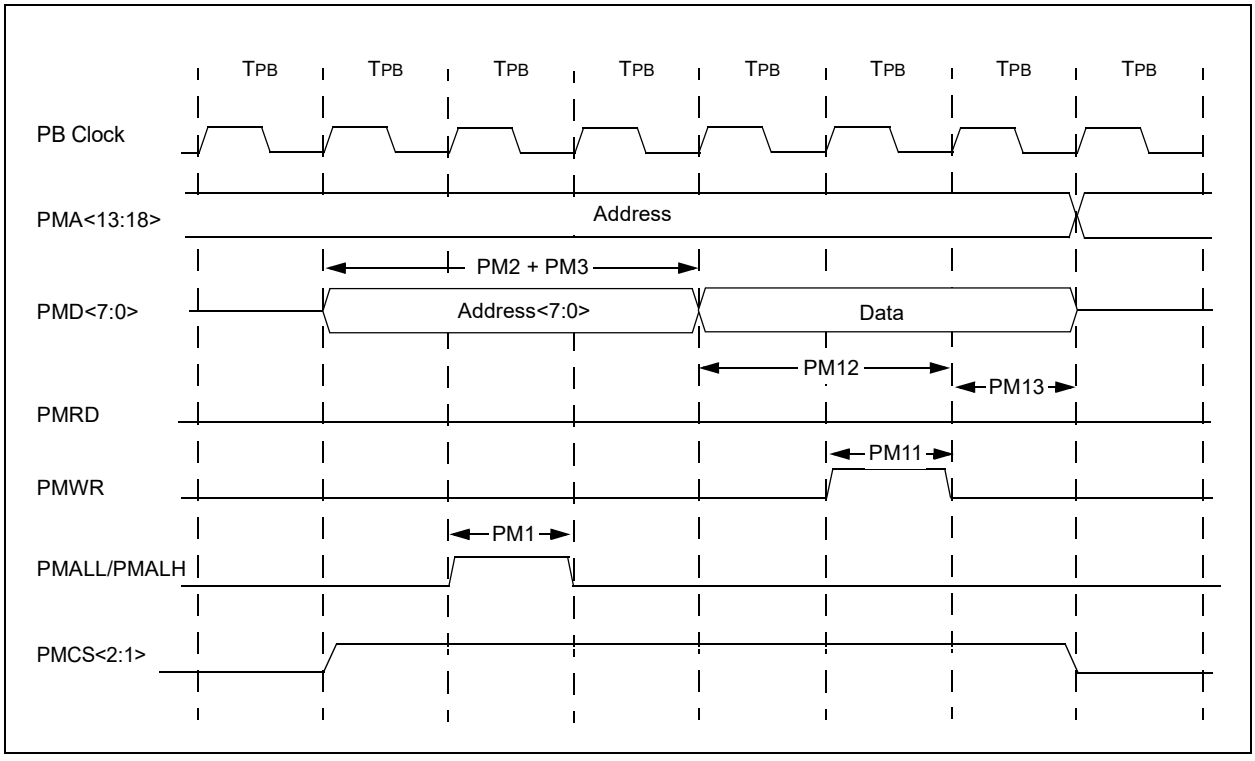

TABLE 31-39: PARALLEL MASTER PORT WRITE TIMING REQUIREMENTS

AC CHARACTERISTICS			Standard Operating Conditions: 2.3V to 3.6V (unless otherwise stated) Operating temperature -40°C ≤ TA ≤ +85°C for Industrial -40°C ≤ TA ≤ +105°C for V-temp				
Param. No.	**Symbol**	**Characteristics(1)**	**Min.**	**Typ.**	**Max.**	**Units**	**Conditions**
PM11	TWR	PMWR Pulse Width	—	1 TPB	—	—	—
PM12	TDVSU	Data Out Valid before PMWR or PMENB goes Inactive (data setup time)	—	2 TPB	—	—	—
PM13	TDVHOLD	PMWR or PMEMB Invalid to Data Out Invalid (data hold time)	—	1 TPB	—	—	—

Note 1: These parameters are characterized, but not tested in manufacturing.

TABLE 31-40: OTG ELECTRICAL SPECIFICATIONS

AC CHARACTERISTICS			Standard Operating Conditions: 2.3V to 3.6V (unless otherwise stated) Operating temperature -40°C ≤ TA ≤ +85°C for Industrial -40°C ≤ TA ≤ +105°C for V-temp				
Param. No.	**Symbol**	**Characteristics(1)**	**Min.**	**Typ.**	**Max.**	**Units**	**Conditions**
USB313	VUSB3V3	USB Voltage	3.0	—	3.6	V	Voltage on VUSB3V3 must be in this range for proper USB operation
USB315	VILUSB	Input Low Voltage for USB Buffer	—	—	0.8	V	—
USB316	VIHUSB	Input High Voltage for USB Buffer	2.0	—	—	V	—
USB318	VDIFS	Differential Input Sensitivity	—	—	0.2	V	The difference between D+ and D- must exceed this value while VCM is met
USB319	VCM	Differential Common Mode Range	0.8	—	2.5	V	—
USB320	ZOUT	Driver Output Impedance	28.0	—	44.0	Ω	—
USB321	VOL	Voltage Output Low	0.0	—	0.3	V	1.425 kΩ load connected to VUSB3V3
USB322	VOH	Voltage Output High	2.8	—	3.6	V	1.425 kΩ load connected to ground

Note 1: These parameters are characterized, but not tested in manufacturing.

© 2014-2019 Microchip Technology Inc.

TABLE 31-41: CTMU CURRENT SOURCE SPECIFICATIONS

DC CHARACTERISTICS			Standard Operating Conditions (see Note 3):2.3V to 3.6V (unless otherwise stated) Operating temperature -40°C ≤ TA ≤ +85°C for Industrial -40°C ≤ TA ≤ +105°C for V-temp				
Param No.	**Symbol**	**Characteristic**	**Min.**	**Typ.**	**Max.**	**Units**	**Conditions**
CTMU CURRENT SOURCE							
CTMUI1	IOUT1	Base Range(1)	—	0.55	—	μA	CTMUCON<9:8> = 01
CTMUI2	IOUT2	10x Range(1)	—	5.5	—	μA	CTMUCON<9:8> = 10
CTMUI3	IOUT3	100x Range(1)	—	55	—	μA	CTMUCON<9:8> = 11
CTMUI4	IOUT4	1000x Range(1)	—	550	—	μA	CTMUCON<9:8> = 00
CTMUFV1	VF	Temperature Diode Forward Voltage(1,2)	—	0.598	—	V	TA = +25ºC, CTMUCON<9:8> = 01
			—	0.658	—	V	TA = +25ºC, CTMUCON<9:8> = 10
			—	0.721	—	V	TA = +25ºC, CTMUCON<9:8> = 11
CTMUFV2	VFVR	Temperature Diode Rate of Change(1,2)	—	-1.92	—	mV/ºC	CTMUCON<9:8> = 01
			—	-1.74	—	mV/ºC	CTMUCON<9:8> = 10
			—	-1.56	—	mV/ºC	CTMUCON<9:8> = 11

Note 1: Nominal value at center point of current trim range (CTMUCON<15:10> = 000000).

2: Parameters are characterized but not tested in manufacturing. Measurements taken with the following conditions:

- VREF+ = AVDD = 3.3V
- ADC module configured for conversion speed of 500 ksps
- All PMD bits are cleared (PMDx = 0)
- Executing a `while(1)` statement
- Device operating from the FRC with no PLL

3: The CTMU module is functional at VBORMIN < VDD < VDDMIN, but with degraded performance. Unless otherwise stated, module functionality is tested, but not characterized.

FIGURE 31-23: EJTAG TIMING CHARACTERISTICS

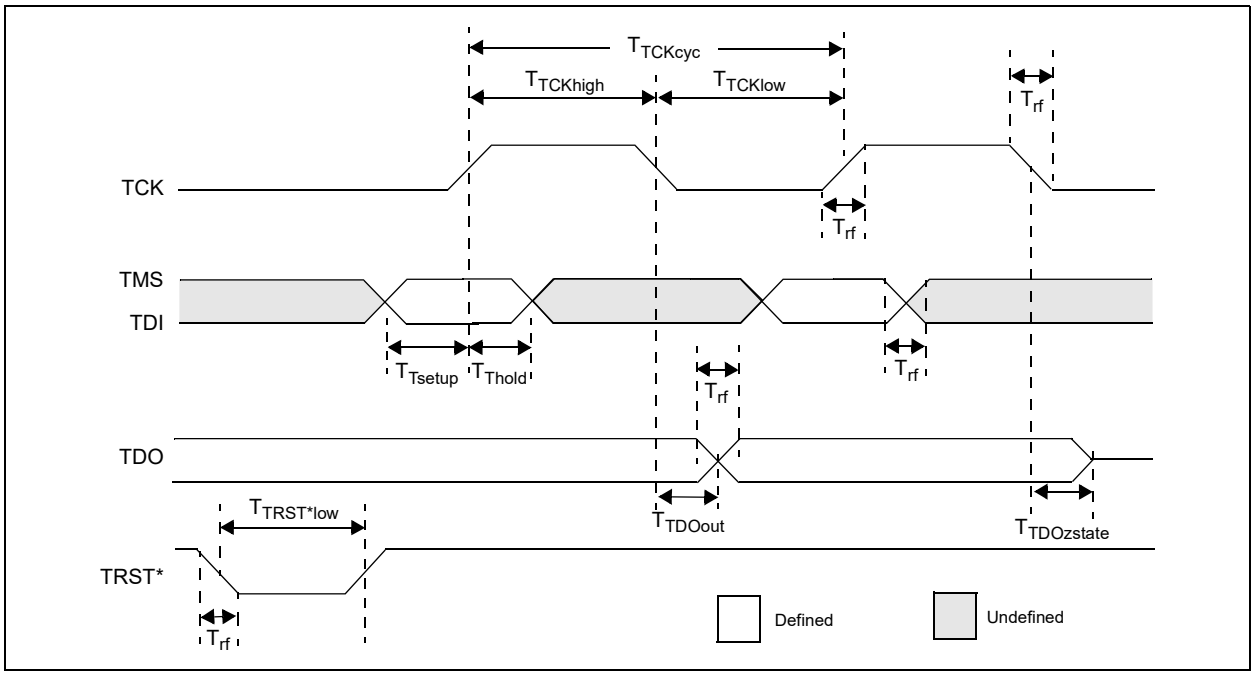

TABLE 31-42: EJTAG TIMING REQUIREMENTS

AC CHARACTERISTICS			Standard Operating Conditions: 2.3V to 3.6V (unless otherwise stated) Operating temperature -40°C ≤ TA ≤ +85°C for Industrial -40°C ≤ TA ≤ +105°C for V-temp			
Param. No.	**Symbol**	**Description(1)**	**Min.**	**Max.**	**Units**	**Conditions**
EJ1	TTCKCYC	TCK Cycle Time	25	—	ns	—
EJ2	TTCKHIGH	TCK High Time	10	—	ns	—
EJ3	TTCKLOW	TCK Low Time	10	—	ns	—
EJ4	TTSETUP	TAP Signals Setup Time Before Rising TCK	5	—	ns	—
EJ5	TTHOLD	TAP Signals Hold Time After Rising TCK	3	—	ns	—
EJ6	TTDOOUT	TDO Output Delay Time from Falling TCK	—	5	ns	—
EJ7	TTDOZSTATE	TDO 3-State Delay Time from Falling TCK	—	5	ns	—
EJ8	TTRSTLOW	TRST Low Time	25	—	ns	—
EJ9	TRF	TAP Signals Rise/Fall Time, All Input and Output	—	—	ns	—

Note 1: These parameters are characterized, but not tested in manufacturing.

© 2014-2019 Microchip Technology Inc.

32.0 50 MHz ELECTRICAL CHARACTERISTICS

This section provides an overview of the PIC32MX1XX/2XX/5XX 64/100-pin Family electrical characteristics for devices operating at 50 MHz.

The specifications for 50 MHz are identical to those shown in **Section 31.0 "40 MHz Electrical Characteristics"**, with the exception of the parameters listed in this chapter.

Parameters in this chapter begin with the letter "M", which denotes 50 MHz operation. For example, parameter DC29a in **Section 31.0 "40 MHz Electrical Characteristics"**, is the up to 40 MHz operation equivalent for MDC29a.

Absolute maximum ratings for the PIC32MX1XX/2XX/5XX 64/100-pin Family 50 MHz devices are listed below. Exposure to these maximum rating conditions for extended periods may affect device reliability. Functional operation of the device at these or any other conditions, above the parameters indicated in the operation listings of this specification, is not implied.

Absolute Maximum Ratings

(See Note 1)

Ambient temperature under bias ..... -40°C to +85°C
Storage temperature ..... -65°C to +150°C
Voltage on V_{DD} with respect to V_{SS} ..... -0.3V to +4.0V
Voltage on any pin that is not 5V tolerant, with respect to V_{SS} **(Note 3)** ..... -0.3V to (V_{DD} + 0.3V)
Voltage on any 5V tolerant pin with respect to V_{SS} when $V_{DD} \geq 2.3V$ **(Note 3)** ..... -0.3V to +5.5V
Voltage on any 5V tolerant pin with respect to V_{SS} when $V_{DD} < 2.3V$ **(Note 3)** ..... -0.3V to +3.6V
Voltage on D+ or D- pin with respect to V_{USB3V3} ..... -0.3V to (V_{USB3V3} + 0.3V)
Voltage on V_{BUS} with respect to V_{SS} ..... -0.3V to +5.5V
Maximum current out of V_{SS} pin(s) ..... 300 mA
Maximum current into V_{DD} pin(s) **(Note 2)** ..... 300 mA
Maximum output current sunk by any I/O pin ..... 15 mA
Maximum output current sourced by any I/O pin ..... 15 mA
Maximum current sunk by all ports ..... 200 mA
Maximum current sourced by all ports **(Note 2)** ..... 200 mA

Note 1: Stresses above those listed under **"Absolute Maximum Ratings"** may cause permanent damage to the device. This is a stress rating only and functional operation of the device at those or any other conditions, above those indicated in the operation listings of this specification, is not implied. Exposure to maximum rating conditions for extended periods may affect device reliability.

2: Maximum allowable current is a function of device maximum power dissipation (see Table 32-2).

3: See the **"Device Pin Tables"** section for the 5V tolerant pins.

32.1 DC Characteristics

TABLE 32-1: OPERATING MIPS VS. VOLTAGE

Characteristic	V_{DD} Range (in Volts)(1)	Temp. Range (in °C)	Max. Frequency
			PIC32MX1XX/2XX/5XX 64/100-pin Family
MDC5	V_{BOR}-3.6V	-40°C to +85°C	50 MHz

Note 1: Overall functional device operation at $V_{BORMIN} < V_{DD} < V_{DDMIN}$ is tested, but not characterized. All device Analog modules, such as ADC, etc., will function, but with degraded performance below V_{DDMIN}. Refer to parameter BO10 in Table 31-10 for BOR values.

TABLE 32-2: DC CHARACTERISTICS: OPERATING CURRENT (I_{DD})

DC CHARACTERISTICS			Standard Operating Conditions: 2.3V to 3.6V (unless otherwise stated) Operating temperature -40°C ≤ TA ≤ +85°C for Industrial	
Parameter No.	**Typical(3)**	**Max.**	**Units**	**Conditions**
Operating Current (I_{DD}) (Note 1, 2)				
MDC24	25	40	mA	50 MHz

Note 1: A device's I_{DD} supply current is mainly a function of the operating voltage and frequency. Other factors, such as PBCLK (Peripheral Bus Clock) frequency, number of peripheral modules enabled, internal code execution pattern, execution from Program Flash memory vs. SRAM, I/O pin loading and switching rate, oscillator type, as well as temperature, can have an impact on the current consumption.

2: The test conditions for I_{DD} measurements are as follows:

- Oscillator mode is EC (for 8 MHz and below) and EC+PLL (for above 8 MHz) with OSC1 driven by external square wave from rail-to-rail, (OSC1 input clock input over/undershoot < 100 mV required)
- OSC2/CLKO is configured as an I/O input pin
- USB PLL oscillator is disabled if the USB module is implemented, PBCLK divisor = 1:8
- CPU, Program Flash, and SRAM data memory are operational, SRAM data memory Wait states = `1`
- No peripheral modules are operating, (ON bit = `0`), but the associated PMD bit is cleared
- WDT, Clock Switching, Fail-Safe Clock Monitor, and Secondary Oscillator are disabled
- All I/O pins are configured as inputs and pulled to V_{SS}
- $\overline{MCLR}$ = V_{DD}
- CPU executing `while(1)` statement from Flash

3: RTCC and JTAG are disabled

4: Data in "Typical" column is at 3.3V, 25°C at specified operating frequency unless otherwise stated. Parameters are for design guidance only and are not tested.

© 2014-2019 Microchip Technology Inc.

TABLE 32-3: DC CHARACTERISTICS: IDLE CURRENT (I_{IDLE})

DC CHARACTERISTICS			Standard Operating Conditions: 2.3V to 3.6V (unless otherwise stated) Operating temperature -40°C ≤ TA ≤ +85°C for Industrial	
Parameter No.	**Typical(2)**	**Max.**	**Units**	**Conditions**
Idle Current (I_{IDLE}): Core Off, Clock on Base Current (Note 1)				
MDC34a	9.5	24	mA	50 MHz

Note 1: The test conditions for I_{IDLE} current measurements are as follows:
- Oscillator mode is EC (for 8 MHz and below) and EC+PLL (for above 8 MHz) with OSC1 driven by external square wave from rail-to-rail, (OSC1 input clock input over/undershoot < 100 mV required)
- OSC2/CLKO is configured as an I/O input pin
- USB PLL oscillator is disabled if the USB module is implemented, PBCLK divisor = 1:8
- CPU is in Idle mode (CPU core Halted), and SRAM data memory Wait states = 1
- No peripheral modules are operating, (ON bit = 0), but the associated PMD bit is cleared
- WDT, Clock Switching, Fail-Safe Clock Monitor, and Secondary Oscillator are disabled
- All I/O pins are configured as inputs and pulled to V_{SS}
- $\overline{MCLR}$ = V_{DD}
- RTCC and JTAG are disabled

2: Data in the "Typical" column is at 3.3V, 25°C unless otherwise stated. Parameters are for design guidance only and are not tested.

TABLE 32-4: DC CHARACTERISTICS: POWER-DOWN CURRENT (I_{PD})

DC CHARACTERISTICS			Standard Operating Conditions: 2.3V to 3.6V (unless otherwise stated) Operating temperature -40°C ≤ TA ≤ +85°C for Industrial		
Param. No.	**Typical(2)**	**Max.**	**Units**	**Conditions**	
Power-Down Current (I_{PD}) (Note 1)					
MDC40k	50	150	μA	-40°C	Base Power-Down Current
MDC40n	250	650	μA	+85°C	
Module Differential Current					
MDC41e	15	55	μA	3.6V	Watchdog Timer Current: ΔI_{WDT} **(Note 3)**
MDC42e	34	55	μA	3.6V	RTCC + Timer1 w/32 kHz Crystal: ΔI_{RTCC} **(Note 3)**
MDC43d	1100	1800	μA	3.6V	ADC: ΔI_{ADC} **(Notes 3,4)**

Note 1: The test conditions for I_{PD} current measurements are as follows:
- Oscillator mode is EC (for 8 MHz and below) and EC+PLL (for above 8 MHz) with OSC1 driven by external square wave from rail-to-rail, (OSC1 input clock input over/undershoot < 100 mV required)
- OSC2/CLKO is configured as an I/O input pin
- USB PLL oscillator is disabled if the USB module is implemented, PBCLK divisor = 1:8
- CPU is in Sleep mode, and SRAM data memory Wait states = 1
- No peripheral modules are operating, (ON bit = 0), but the associated PMD bit is set
- WDT, Clock Switching, Fail-Safe Clock Monitor, and Secondary Oscillator are disabled
- All I/O pins are configured as inputs and pulled to V_{SS}
- $\overline{MCLR}$ = V_{DD}
- RTCC and JTAG are disabled

2: Data in the "Typical" column is at 3.3V, 25°C unless otherwise stated. Parameters are for design guidance only and are not tested.

3: The Δ current is the additional current consumed when the module is enabled. This current should be added to the base I_{PD} current.

4: Test conditions for ADC module differential current are as follows: Internal ADC RC oscillator enabled.

32.2 AC Characteristics and Timing Parameters

The information contained in this section defines PIC32MX1XX/2XX/5XX 64/100-pin AC characteristics and timing parameters.

TABLE 32-5: EXTERNAL CLOCK TIMING REQUIREMENTS

AC CHARACTERISTICS			Standard Operating Conditions: 2.3V to 3.6V (unless otherwise stated) Operating temperature -40°C ≤ TA ≤ +85°C for Industrial				
Param. No.	**Symbol**	**Characteristics**	**Min.**	**Typical**	**Max.**	**Units**	**Conditions**
MOS10	FOSC	External CLKI Frequency (External clocks allowed only in EC and ECPLL modes)	DC 4	— —	50 50	MHz MHz	EC **(Note 2)** ECPLL **(Note 1)**

Note 1: PLL input requirements: 4 MHz ≤ FPLLIN ≤ 5 MHz (use PLL prescaler to reduce Fosc). This parameter is characterized, but tested at 10 MHz only at manufacturing.

2: This parameter is characterized, but not tested in manufacturing.

TABLE 32-6: SPIx MASTER MODE (CKE = 0) TIMING REQUIREMENTS

AC CHARACTERISTICS			Standard Operating Conditions: 2.3V to 3.6V (unless otherwise stated) Operating temperature -40°C ≤ TA ≤ +85°C for Industrial				
Param. No.	**Symbol**	**Characteristics**	**Min.**	**Typical**	**Max.**	**Units**	**Conditions**
MSP10	TSCL	SCKx Output Low Time **(Note 1,2)**	TSCK/2	—	—	ns	—
MSP11	TSCH	SCKx Output High Time **(Note 1,2)**	TSCK/2	—	—	ns	—

Note 1: These parameters are characterized, but not tested in manufacturing.

2: The minimum clock period for SCKx is 40 ns. Therefore, the clock generated in Master mode must not violate this specification.

TABLE 32-7: SPIx MODULE MASTER MODE (CKE = 1) TIMING REQUIREMENTS

AC CHARACTERISTICS			Standard Operating Conditions: 2.3V to 3.6V (unless otherwise stated) Operating temperature -40°C ≤ TA ≤ +85°C for Industrial				
Param. No.	**Symbol**	**Characteristics(1)**	**Min.**	**Typ.**	**Max.**	**Units**	**Conditions**
MSP10	TSCL	SCKx Output Low Time **(Note 1,2)**	TSCK/2	—	—	ns	—
MSP11	TSCH	SCKx Output High Time **(Note 1,2)**	TSCK/2	—	—	ns	—

Note 1: These parameters are characterized, but not tested in manufacturing.

2: The minimum clock period for SCKx is 40 ns. Therefore, the clock generated in Master mode must not violate this specification.

© 2014-2019 Microchip Technology Inc.

TABLE 32-8: SPIx MODULE SLAVE MODE (CKE = 0) TIMING REQUIREMENTS

AC CHARACTERISTICS			Standard Operating Conditions: 2.3V to 3.6V (unless otherwise stated) Operating temperature -40°C ≤ TA ≤ +85°C for Industrial -40°C ≤ TA ≤ +105°C for V-temp				
Param. No.	**Symbol**	**Characteristics**	**Min.**	**Typ.**	**Max.**	**Units**	**Conditions**
MSP70	TscL	SCKx Input Low Time **(Note 1,2)**	Tsck/2	—	—	ns	—
MSP71	TscH	SCKx Input High Time **(Note 1,2)**	Tsck/2	—	—	ns	—
MSP51	TssH2doZ	$\overline{SS}$x ↑ to SDOx Output High-Impedance **(Note 2)**	5	—	25	ns	—

Note 1: These parameters are characterized, but not tested in manufacturing.
2: The minimum clock period for SCKx is 40 ns.

TABLE 32-9: SPIx MODULE SLAVE MODE (CKE = 1) TIMING REQUIREMENTS

AC CHARACTERISTICS			Standard Operating Conditions: 2.3V to 3.6V (unless otherwise stated) Operating temperature -40°C ≤ TA ≤ +85°C for Industrial				
Param. No.	**Symbol**	**Characteristics**	**Min.**	**Typical**	**Max.**	**Units**	**Conditions**
SP70	TscL	SCKx Input Low Time **(Note 1,2)**	Tsck/2	—	—	ns	—
SP71	TscH	SCKx Input High Time **(Note 1,2)**	Tsck/2	—	—	ns	—

Note 1: These parameters are characterized, but not tested in manufacturing.
2: The minimum clock period for SCKx is 40 ns.

NOTES:

© 2014-2019 Microchip Technology Inc.

33.0 DC AND AC DEVICE CHARACTERISTICS GRAPHS

Note: The graphs provided following this note are a statistical summary based on a limited number of samples and are provided for design guidance purposes only. The performance characteristics listed herein are not tested or guaranteed. In some graphs, the data presented may be outside the specified operating range (e.g., outside specified power supply range) and therefore, outside the warranted range.

FIGURE 33-1: VOH – 4x DRIVER PINS

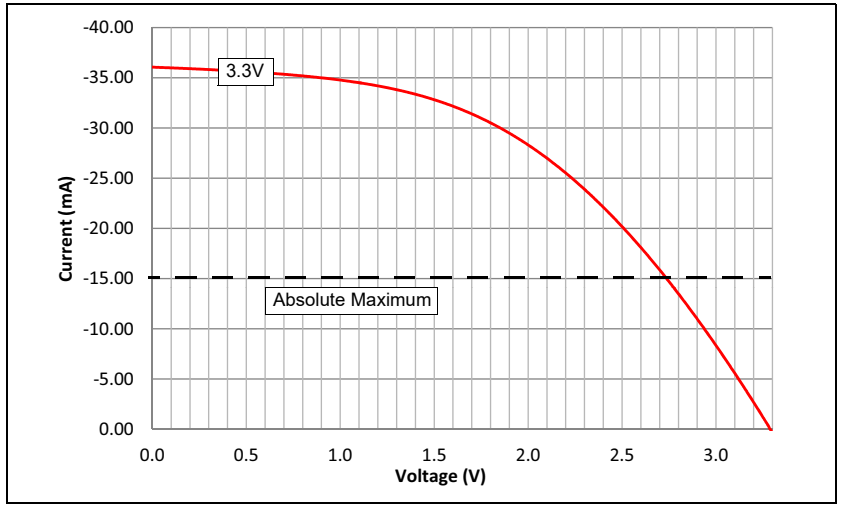

FIGURE 33-2: VOH – 8x DRIVER PINS

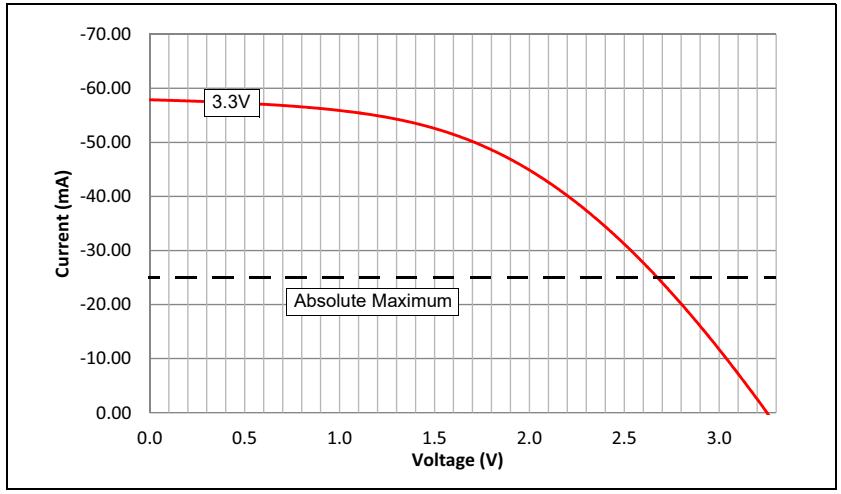

FIGURE 33-3: VOL – 4x DRIVER PINS

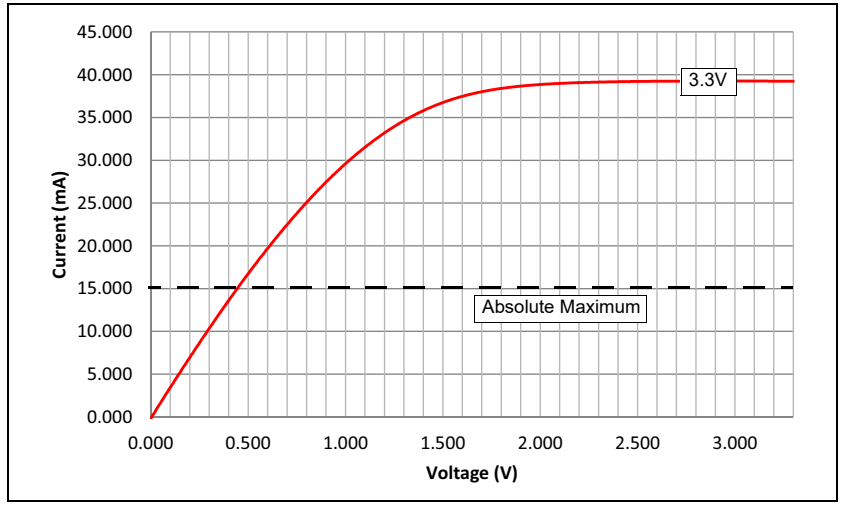

FIGURE 33-4: VOL – 8x DRIVER PINS

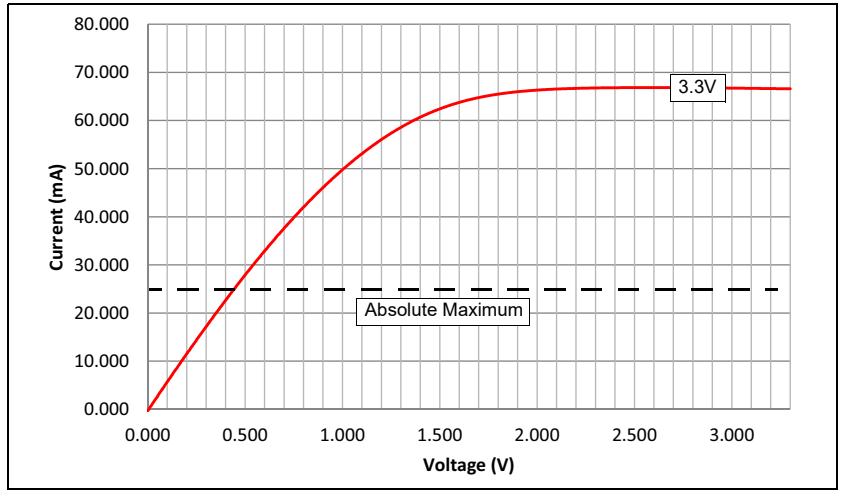

© 2014-2019 Microchip Technology Inc.

FIGURE 33-5: TYPICAL CTMU TEMPERATURE DIODE FORWARD VOLTAGE

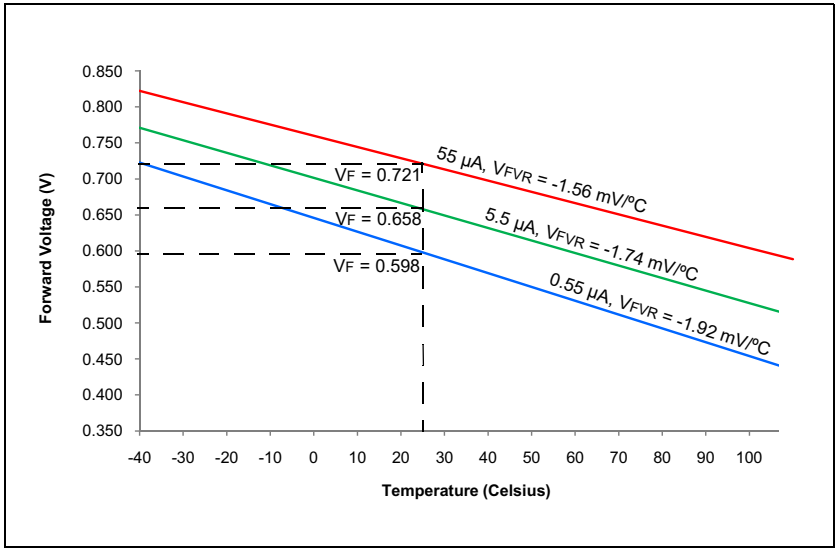

© 2014-2019 Microchip Technology Inc.

34.0 PACKAGING INFORMATION

34.1 Package Marking Information

All devices are marked with Microchip logo and part number.

Additional marking information is as follows:

YYWWNNN

where,

YY - Manufacturing Year Code (last 2 digits of calendar year)
WW - Manufacturing Week Code (e.g, week of January 1 is week ‘01’)
NNN - Alphanumeric Traceability Code

34.2 Package Details

The following sections give the technical details of the packages.

64-Lead Plastic Thin Quad Flatpack (PT) – 10x10x1 mm Body, 2.00 mm [TQFP]

Note: For the most current package drawings, please see the Microchip Packaging Specification located at http://www.microchip.com/packaging

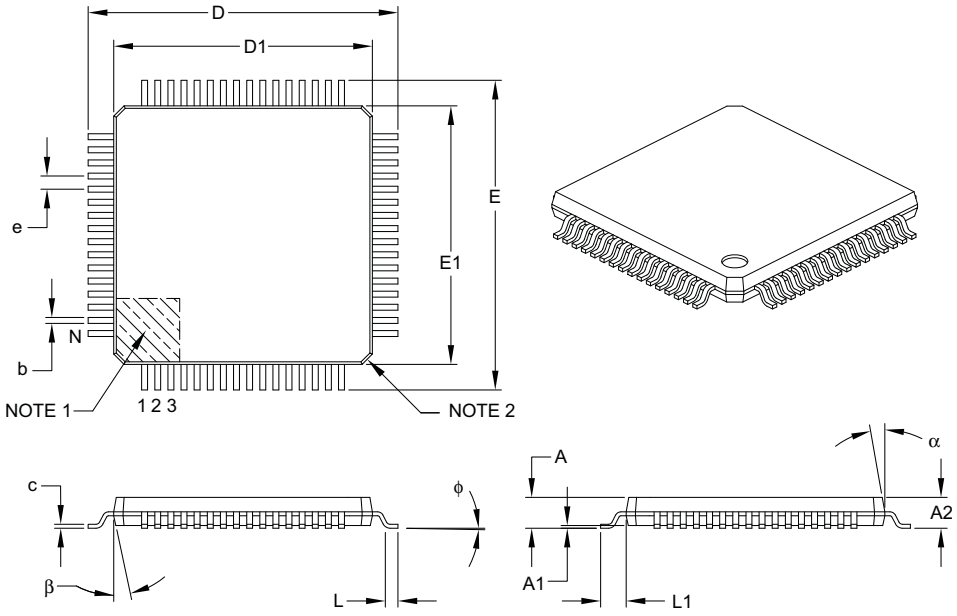

Units		MILLIMETERS		
Dimension Limits		MIN	NOM	MAX
Number of Leads	N	64		
Lead Pitch	e	0.50 BSC		
Overall Height	A	–	–	1.20
Molded Package Thickness	A2	0.95	1.00	1.05
Standoff	A1	0.05	–	0.15
Foot Length	L	0.45	0.60	0.75
Footprint	L1	1.00 REF		
Foot Angle	ϕ	0°	3.5°	7°
Overall Width	E	12.00 BSC		
Overall Length	D	12.00 BSC		
Molded Package Width	E1	10.00 BSC		
Molded Package Length	D1	10.00 BSC		
Lead Thickness	c	0.09	–	0.20
Lead Width	b	0.17	0.22	0.27
Mold Draft Angle Top	α	11°	12°	13°
Mold Draft Angle Bottom	β	11°	12°	13°

Notes:

1. Pin 1 visual index feature may vary, but must be located within the hatched area.
2. Chamfers at corners are optional; size may vary.
3. Dimensions D1 and E1 do not include mold flash or protrusions. Mold flash or protrusions shall not exceed 0.25 mm per side.
4. Dimensioning and tolerancing per ASME Y14.5M.

   BSC: Basic Dimension. Theoretically exact value shown without tolerances.

   REF: Reference Dimension, usually without tolerance, for information purposes only.

Microchip Technology Drawing C04-085B

© 2014-2019 Microchip Technology Inc.

64-Lead Plastic Thin Quad Flatpack (PT) 10x10x1 mm Body, 2.00 mm Footprint [TQFP]

Note: For the most current package drawings, please see the Microchip Packaging Specification located at http://www.microchip.com/packaging

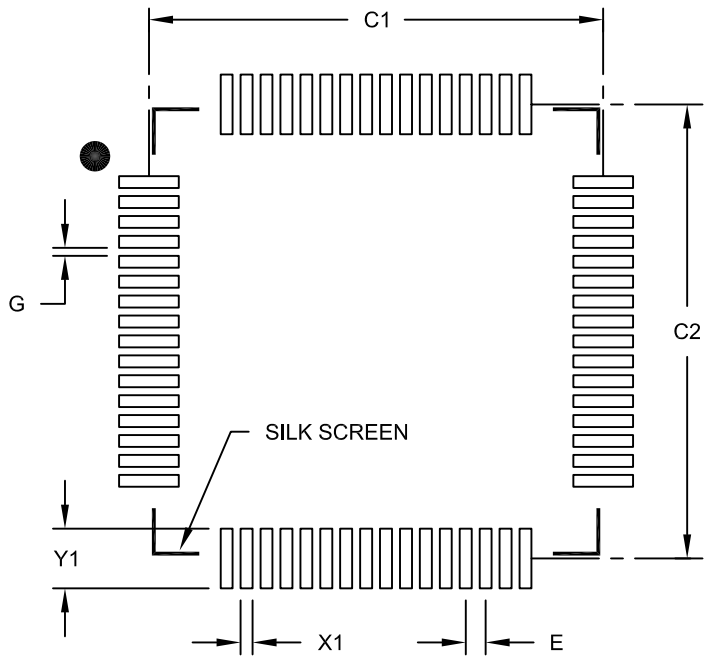

RECOMMENDED LAND PATTERN

Units		MILLIMETERS		
Dimension Limits		MIN	NOM	MAX
Contact Pitch	E		0.50 BSC	
Contact Pad Spacing	C1		11.40	
Contact Pad Spacing	C2		11.40	
Contact Pad Width (X64)	X1			0.30
Contact Pad Length (X64)	Y1			1.50
Distance Between Pads	G	0.20		

Notes:

1. Dimensioning and tolerancing per ASME Y14.5M
   BSC: Basic Dimension. Theoretically exact value shown without tolerances.

Microchip Technology Drawing No. C04-2085B

100-Lead Plastic Thin Quad Flatpack (PF) – 14x14x1 mm Body, 2.00 mm [TQFP]

Note: For the most current package drawings, please see the Microchip Packaging Specification located at http://www.microchip.com/packaging

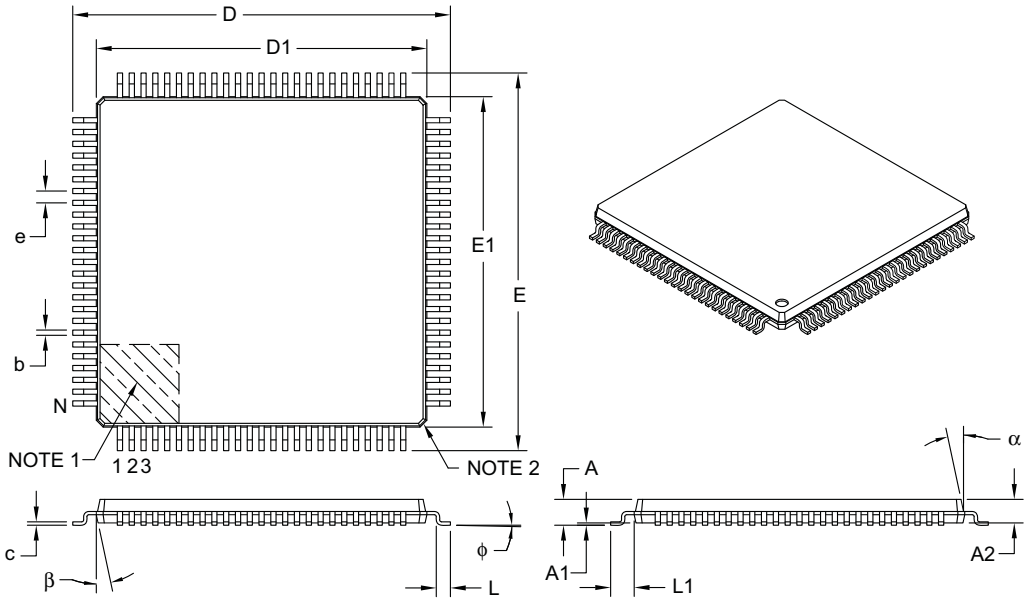

	Units	MILLIMETERS		
	Dimension Limits	MIN	NOM	MAX
Number of Leads	N	100		
Lead Pitch	e	0.50 BSC		
Overall Height	A	–	–	1.20
Molded Package Thickness	A2	0.95	1.00	1.05
Standoff	A1	0.05	–	0.15
Foot Length	L	0.45	0.60	0.75
Footprint	L1	1.00 REF		
Foot Angle	ϕ	0°	3.5°	7°
Overall Width	E	16.00 BSC		
Overall Length	D	16.00 BSC		
Molded Package Width	E1	14.00 BSC		
Molded Package Length	D1	14.00 BSC		
Lead Thickness	c	0.09	–	0.20
Lead Width	b	0.17	0.22	0.27
Mold Draft Angle Top	α	11°	12°	13°
Mold Draft Angle Bottom	β	11°	12°	13°

Notes:

1. Pin 1 visual index feature may vary, but must be located within the hatched area.
2. Chamfers at corners are optional; size may vary.
3. Dimensions D1 and E1 do not include mold flash or protrusions. Mold flash or protrusions shall not exceed 0.25 mm per side.
4. Dimensioning and tolerancing per ASME Y14.5M.

   BSC: Basic Dimension. Theoretically exact value shown without tolerances.

   REF: Reference Dimension, usually without tolerance, for information purposes only.

Microchip Technology Drawing C04-110B

© 2014-2019 Microchip Technology Inc.

100-Lead Plastic Thin Quad Flatpack (PF) - 14x14x1 mm Body 2.00 mm Footprint [TQFP]

Note: For the most current package drawings, please see the Microchip Packaging Specification located at http://www.microchip.com/packaging

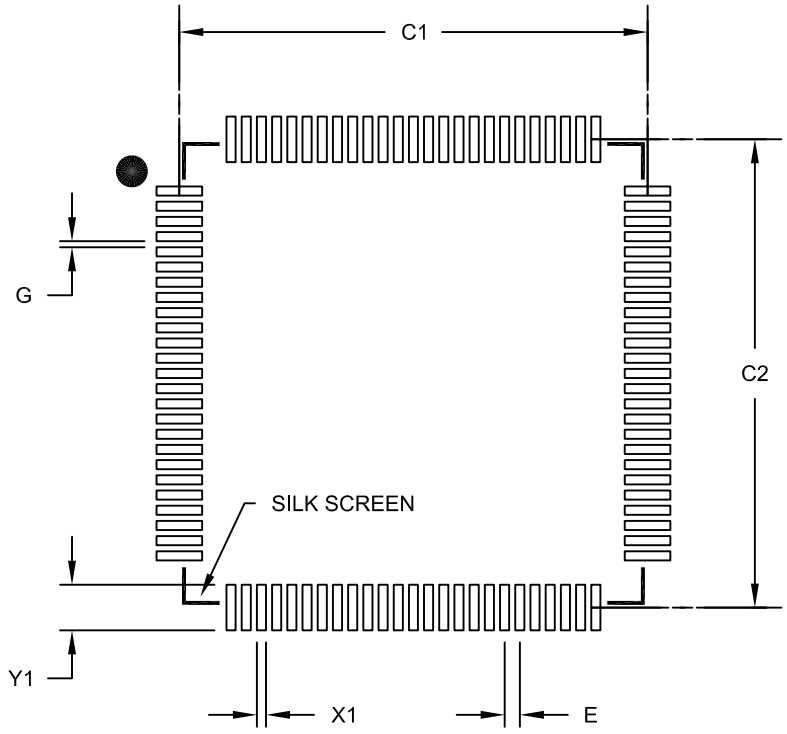

RECOMMENDED LAND PATTERN

Units		MILLIMETERS		
Dimension Limits		MIN	NOM	MAX
Contact Pitch	E		0.50 BSC	
Contact Pad Spacing	C1		15.40	
Contact Pad Spacing	C2		15.40	
Contact Pad Width (X100)	X1			0.30
Contact Pad Length (X100)	Y1			1.50
Distance Between Pads	G	0.20		

Notes:

1. Dimensioning and tolerancing per ASME Y14.5M
   BSC: Basic Dimension. Theoretically exact value shown without tolerances.

Microchip Technology Drawing No. C04-2110B

100-Lead Plastic Thin Quad Flatpack (PT) – 12x12x1 mm Body, 2.00 mm [TQFP]

Note: For the most current package drawings, please see the Microchip Packaging Specification located at http://www.microchip.com/packaging

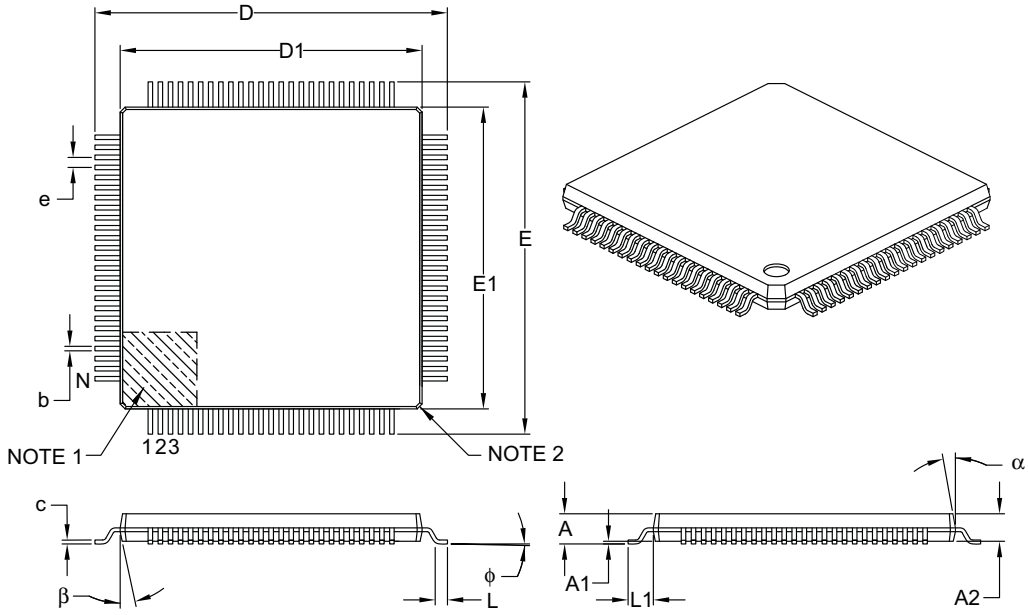

Units		MILLIMETERS		
Dimension Limits		MIN	NOM	MAX
Number of Leads	N	100		
Lead Pitch	e	0.40 BSC		
Overall Height	A	–	–	1.20
Molded Package Thickness	A2	0.95	1.00	1.05
Standoff	A1	0.05	–	0.15
Foot Length	L	0.45	0.60	0.75
Footprint	L1	1.00 REF		
Foot Angle	φ	0°	3.5°	7°
Overall Width	E	14.00 BSC		
Overall Length	D	14.00 BSC		
Molded Package Width	E1	12.00 BSC		
Molded Package Length	D1	12.00 BSC		
Lead Thickness	c	0.09	–	0.20
Lead Width	b	0.13	0.18	0.23
Mold Draft Angle Top	α	11°	12°	13°
Mold Draft Angle Bottom	β	11°	12°	13°

Notes:

1. Pin 1 visual index feature may vary, but must be located within the hatched area.
2. Chamfers at corners are optional; size may vary.
3. Dimensions D1 and E1 do not include mold flash or protrusions. Mold flash or protrusions shall not exceed 0.25 mm per side.
4. Dimensioning and tolerancing per ASME Y14.5M.

   BSC: Basic Dimension. Theoretically exact value shown without tolerances.

   REF: Reference Dimension, usually without tolerance, for information purposes only.

Microchip Technology Drawing C04-100B

© 2014-2019 Microchip Technology Inc.

100-Lead Plastic Thin Quad Flatpack (PT)-12x12x1mm Body, 2.00 mm Footprint [TQFP]

Note: For the most current package drawings, please see the Microchip Packaging Specification located at http://www.microchip.com/packaging

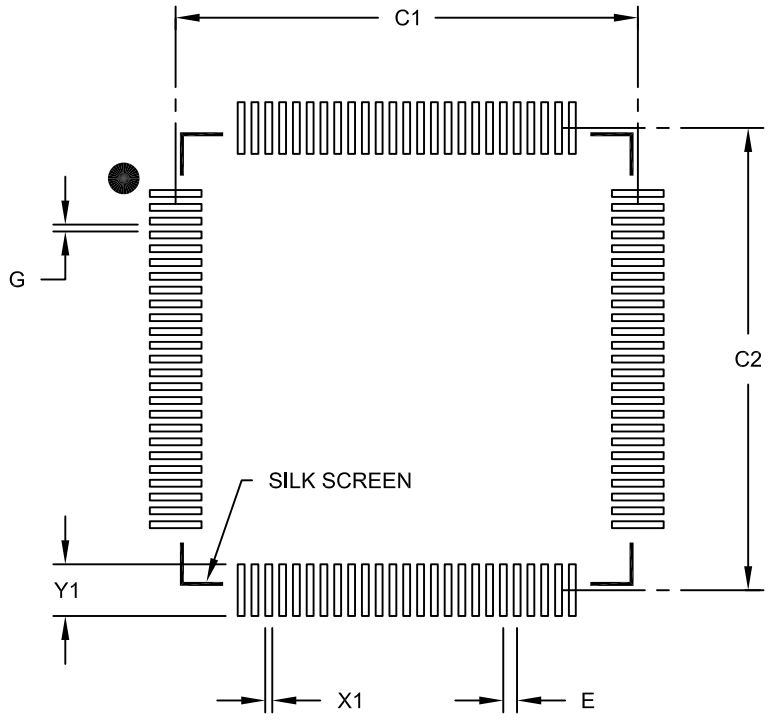

RECOMMENDED LAND PATTERN

Units		MILLIMETERS		
Dimension Limits		MIN	NOM	MAX
Contact Pitch	E		0.40 BSC	
Contact Pad Spacing	C1		13.40	
Contact Pad Spacing	C2		13.40	
Contact Pad Width (X100)	X1			0.20
Contact Pad Length (X100)	Y1			1.50
Distance Between Pads	G	0.20		

Notes:

1. Dimensioning and tolerancing per ASME Y14.5M
   BSC: Basic Dimension. Theoretically exact value shown without tolerances.

Microchip Technology Drawing No. C04-2100B

64-Lead Plastic Quad Flat, No Lead Package (MR) – 9x9x0.9 mm Body with 5.40 x 5.40 Exposed Pad [QFN]

Note: For the most current package drawings, please see the Microchip Packaging Specification located at http://www.microchip.com/packaging

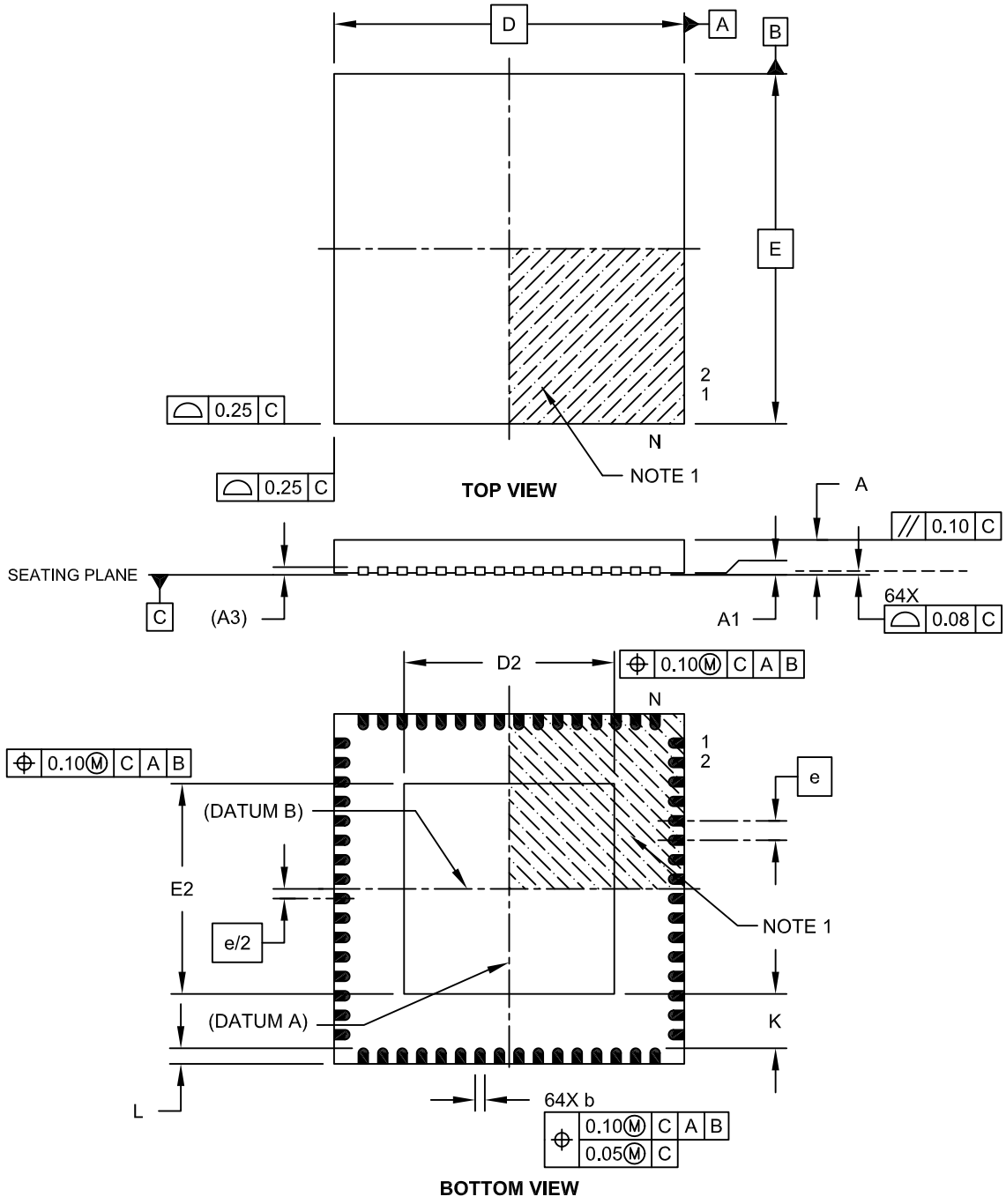

Microchip Technology Drawing C04-154A Sheet 1 of 2

© 2014-2019 Microchip Technology Inc.

64-Lead Plastic Quad Flat, No Lead Package (MR) – 9x9x0.9 mm Body with 5.40 x 5.40 Exposed Pad [QFN]

Note: For the most current package drawings, please see the Microchip Packaging Specification located at http://www.microchip.com/packaging

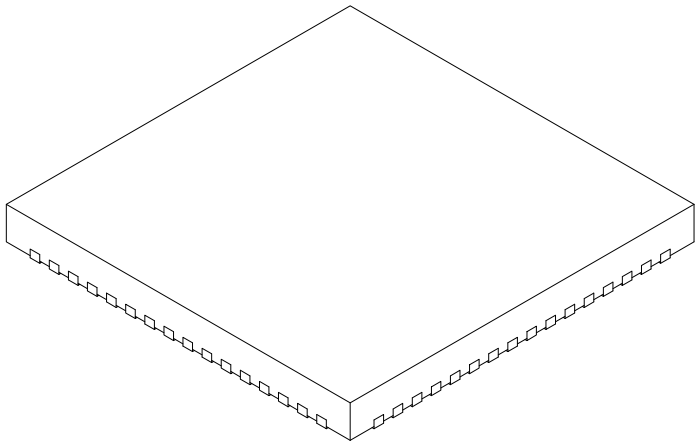

Units		MILLIMETERS		
Dimension Limits		MIN	NOM	MAX
Number of Pins	N	64		
Pitch	e	0.50 BSC		
Overall Height	A	0.80	0.90	1.00
Standoff	A1	0.00	0.02	0.05
Contact Thickness	A3	0.20 REF		
Overall Width	E	9.00 BSC		
Exposed Pad Width	E2	5.30	5.40	5.50
Overall Length	D	9.00 BSC		
Exposed Pad Length	D2	5.30	5.40	5.50
Contact Width	b	0.20	0.25	0.30
Contact Length	L	0.30	0.40	0.50
Contact-to-Exposed Pad	K	0.20	-	-

Notes:

1. Pin 1 visual index feature may vary, but must be located within the hatched area.
2. Package is saw singulated.
3. Dimensioning and tolerancing per ASME Y14.5M.
   BSC: Basic Dimension. Theoretically exact value shown without tolerances.
   REF: Reference Dimension, usually without tolerance, for information purposes only.

Microchip Technology Drawing C04-154A Sheet 2 of 2

64-Lead Plastic Quad Flat, No Lead Package (MR) – 9x9x0.9 mm Body [QFN]
With 0.40 mm Contact Length and 5.40x5.40mm Exposed Pad

Note: For the most current package drawings, please see the Microchip Packaging Specification located at http://www.microchip.com/packaging

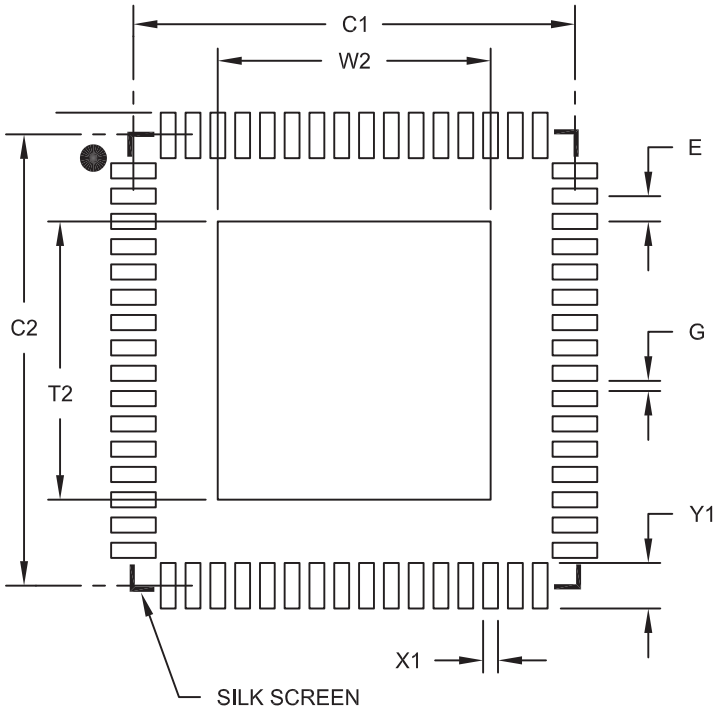

RECOMMENDED LAND PATTERN

Units		MILLIMETERS		
Dimension Limits		MIN	NOM	MAX
Contact Pitch	E	0.50 BSC		
Optional Center Pad Width	W2			5.50
Optional Center Pad Length	T2			5.50
Contact Pad Spacing	C1		8.90	
Contact Pad Spacing	C2		8.90	
Contact Pad Width (X64)	X1			0.30
Contact Pad Length (X64)	Y1			0.85
Distance Between Pads	G	0.20		

Notes:

1. Dimensioning and tolerancing per ASME Y14.5M
   BSC: Basic Dimension. Theoretically exact value shown without tolerances.

Microchip Technology Drawing No. C04-2154A

© 2014-2019 Microchip Technology Inc.

100-Ball Thin Fine Pitch Ball Grid Array (GJX) - 7x7 mm Body [TFBGA]

Note: For the most current package drawings, please see the Microchip Packaging Specification located at http://www.microchip.com/packaging

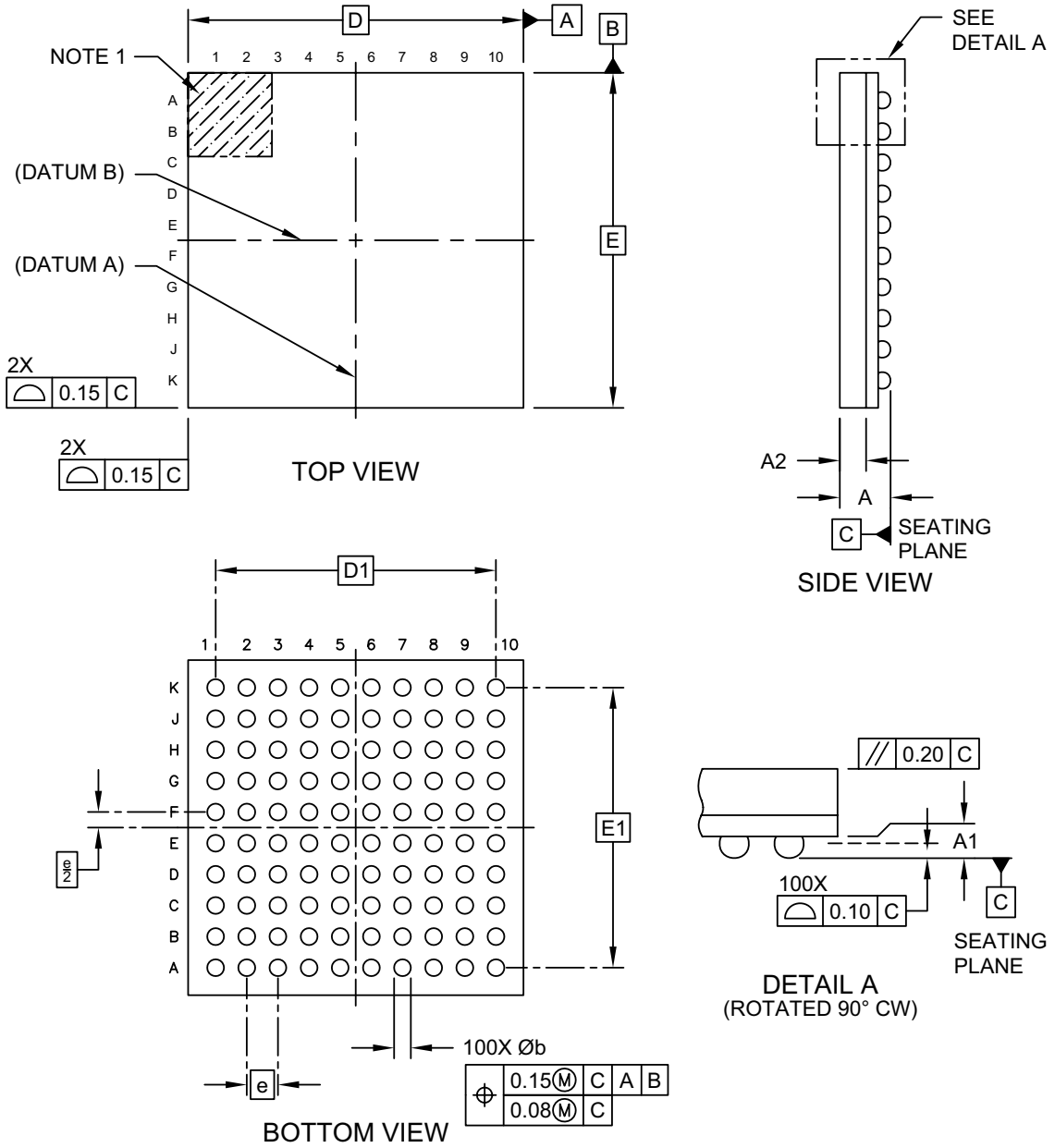

Microchip Technology Drawing C04-328A Sheet 1 of 2

100-Ball Thin Fine Pitch Ball Grid Array (GJX) - 7x7 mm Body [TFBGA]

Note: For the most current package drawings, please see the Microchip Packaging Specification located at http://www.microchip.com/packaging

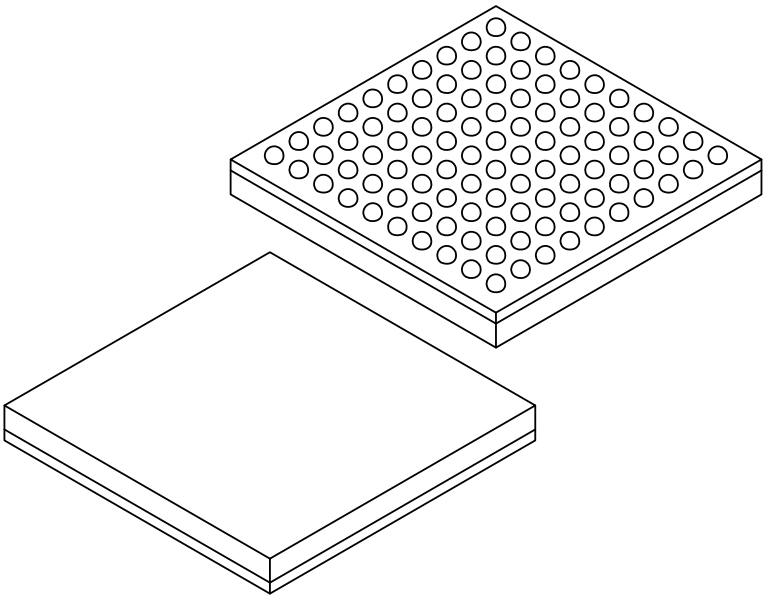

Units		MILLIMETERS		
Dimension Limits		MIN	NOM	MAX
Number of Terminals	N	100		
Pitch	e	0.65 BSC		
Overall Height	A	-	-	1.06
Ball Height	A1	0.18	0.26	-
Mold Cap Height	A2	0.45	0.50	0.55
Overall Length	D	7.00 BSC		
Overall Pitch	D1	5.85 BSC		
Overall Width	E	7.00 BSC		
Overall Pitch	E1	5.85 BSC		
Terminal Width	b	0.30	0.35	0.40

Notes:

1. Pin 1 visual index feature may vary, but must be located within the hatched area.
2. Dimensioning and tolerancing per ASME Y14.5M

   BSC: Basic Dimension. Theoretically exact value shown without tolerances.

   REF: Reference Dimension, usually without tolerance, for information purposes only.

Microchip Technology Drawing C04-328A Sheet 2 of 2

© 2014-2019 Microchip Technology Inc.

100-Ball Thin Fine Pitch Ball Grid Array (GJX) - 7x7 mm Body [TFBGA]

Note: For the most current package drawings, please see the Microchip Packaging Specification located at http://www.microchip.com/packaging

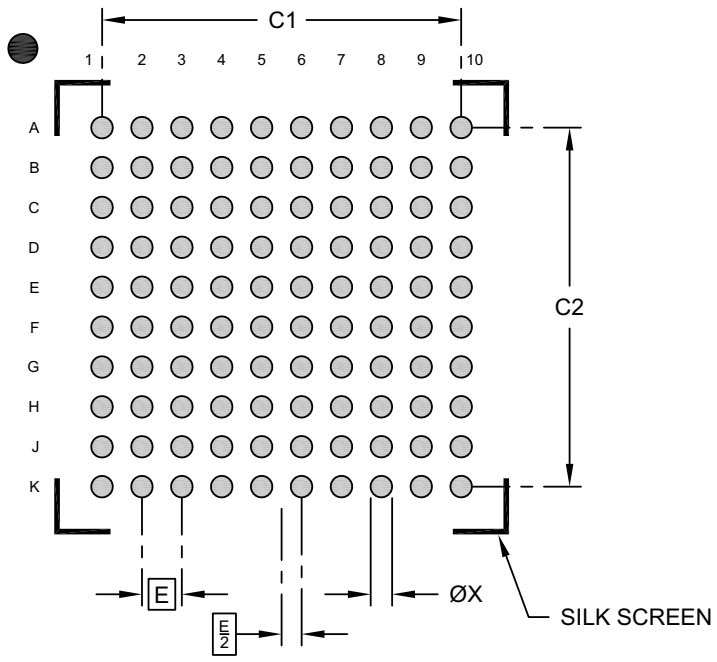

RECOMMENDED LAND PATTERN

Units		MILLIMETERS		
Dimension Limits		MIN	NOM	MAX
Contact Pitch	E		0.65 BSC	
Contact Pad Diameter	X		0.35	
Contact Pad Spacing	C1		5.85	
Contact Pad Spacing	C2		5.85	

Notes:

1. Dimensioning and tolerancing per ASME Y14.5M
   BSC: Basic Dimension. Theoretically exact value shown without tolerances.

Microchip Technology Drawing C04-2328A

© 2014-2019 Microchip Technology Inc.

INDEX

A

AC Characteristics 325, 360
- 10-Bit Conversion Rate Parameters 347
- ADC Specifications 345
- Analog-to-Digital Conversion Requirements 348
- EJTAG Timing Requirements 356
- Internal FRC Accuracy 327
- Internal RC Accuracy 327
- OTG Electrical Specifications 354
- Parallel Master Port Read Requirements 353
- Parallel Master Port Write 354
- Parallel Master Port Write Requirements 354
- Parallel Slave Port Requirements 352
- PLL Clock Timing 327

Analog-to-Digital Converter (ADC) 235

B

Block Diagrams
- ADC Module 235
- Comparator I/O Operating Modes 275
- Comparator Voltage Reference 279
- Connections for On-Chip Voltage Regulator 306
- CPU 39
- CTMU Configurations
  - Time Measurement 283
- DMA 89
- Input Capture 177
- Inter-Integrated Circuit (I^2C) 196
- Interrupt Controller 57
- JTAG Programming, Debugging and Trace Ports 306
- Output Compare Module 181
- PIC32 CAN Module 247
- PMP Pinout and Connections to External Devices 211
- Reset System 73
- RTCC 225
- SPI Module 185
- Timer1 163
- Timer2/3/4/5 (16-Bit) 167
- Typical Multiplexed Port Structure 133
- UART 203
- WDT and Power-up Timer 173

Brown-out Reset (BOR)
- and On-Chip Voltage Regulator 306

C

C Compilers
- MPLAB C18 310

Charge Time Measurement Unit. *See* CTMU.

Clock Diagram 78

Comparator
- Specifications 323, 324

Comparator Module 275

Comparator Voltage Reference (CVref 279

Configuration Bit 295

Configuring Analog Port Pins 134

Controller Area Network (CAN) 247

CPU
- Architecture Overview 40
- Coprocessor 0 Registers 41
- Core Exception Types 42
- EJTAG Debug Support 42
- Power Management 42

CPU Module 29, 39

CTMU
- Registers 285

Customer Change Notification Service 387

Customer Notification Service 387

Customer Support 387

D

DC and AC Characteristics
- Graphs and Tables 363

DC Characteristics 314
- I/O Pin Input Specifications 319
- I/O Pin Output Specifications 320
- Idle Current (IIDLE) 317
- Power-Down Current (IPD) 318
- Program Memory 322
- Temperature and Voltage Specifications 315

DC Characteristics (50 MHz) 358
- Idle Current (IIDLE) 359
- Power-Down Current (IPD) 359

Development Support 309

Direct Memory Access (DMA) Controller 89

E

Electrical Characteristics 313
- 50 MHz 357

Errata 14

External Clock
- Timer1 Timing Requirements 331
- Timer2, 3, 4, 5 Timing Requirements 332
- Timing Requirements 326

External Clock (50 MHz)
- Timing Requirements 360

F

Flash Program Memory 67
- RTSP Operation 67

H

High Voltage Detect (HVD) 75, 306

I

I/O Ports 133
- Parallel I/O (PIO) 134
- Write/Read Timing 134

Input Change Notification 134

Instruction Set 307

Inter-Integrated Circuit (I^2C) 195

Internal Voltage Reference Specifications 324

Internet Address 387

Interrupt Controller 57
- IRG, Vector and Bit Location 58

M

Memory Maps
- Devices with 128 KB of Program Memory 45
- Devices with 256 KB of Program Memory 46
- Devices with 512 KB of Program Memory 47
- Devices with 64 KB of Program Memory 44

Memory Organization 43
- Layout 43

Microchip Internet Web Site 387

MPASM Assembler 310

MPLAB ASM30 Assembler, Linker, Librarian 310

MPLAB Integrated Development Environment Software 309

MPLAB PM3 Device Programmer 311
MPLAB REAL ICE In-Circuit Emulator System 311
MPLINK Object Linker/MPLIB Object Librarian 310

O

Oscillator Configuration 77
Output Compare 181

P

Packaging 365
    Details 366
    Marking 365
Parallel Master Port (PMP) 211
PIC32 Family USB Interface Diagram 110
Pinout I/O Descriptions (table) 18
Power-on Reset (POR)
    and On-Chip Voltage Regulator 306
Power-Saving Features 289
    CPU Halted Methods 289
    Operation 289
    with CPU Running 289

R

Real-Time Clock and Calendar (RTCC) 225
Register Map
    ADC 237
    Bus Matrix 49
    Comparator 276
    Comparator Voltage Reference 280
    CTMU 284
    Device and Revision ID Summary 296
    Device Configuration Word Summary 296
    DMA Channel 0-3 91
    DMA CRC 90
    DMA Global 90
    Flash Controller 68
    I2C1 and I2C2 197
    Input Capture 1-5 178
    Interrupt 60
    Oscillator Configuration 80, 174
    Output Compare1-5 182
    Parallel Master Port 212
    Peripheral Pin Select Input 155
    Peripheral Pin Select Output 157
    PORTA (100-pin Devices Only) 141
    PORTB 142
    PORTB (100-pin Devices Only) 143
    PORTC (64-pin Devices Only) 144
    PORTD (100-pin Devices Only) 145
    PORTD (64-pin Devices Only) 146
    PORTE (100-pin Devices Only) 147
    PORTE (64-pin Devices Only) 148
    PORTF (100-pin General Purpose Devices Only) 149
    PORTF (100-pin USB Devices Only) 150
    PORTF (64-pin General Purpose Devices Only) 151
    PORTF (64-pin USB Devices Only) 152
    PORTG (100-pin Devices Only) 153
    PORTG (64-pin Devices Only) 154
    RTCC 226
    SPI1 through SPI4 186
    Timer1 164
    Timer2-5 169
    UART1-5 204
    USB 111
Registers
    [*pin name*]R (Peripheral Pin Select Input) 161
    AD1CHS (ADC Input Select) 243
    AD1CON1 (A/D Control 1) 234
    AD1CON1 (ADC Control 1) 234, 239
    AD1CON2 (ADC Control 2) 241
    AD1CON3 (ADC Control 3) 242
    AD1CSSL (ADC Input Scan Select) 245
    AD1CSSL2 (ADC Input Scan Select 2) 245
    ALRMDATE (Alarm Date Value) 234
    ALRMDATECLR (ALRMDATE Clear) 234
    ALRMTIME (Alarm Time Value) 233
    ALRMTIMECLR (ALRMTIME Clear) 234
    ALRMTIMEINV (ALRMTIME Invert) 234
    ALRMTIMESET (ALRMTIME Set) 234
    BMXBOOTSZ (Boot Flash (IFM) Size 55
    BMXCON (Bus Matrix Configuration) 50
    BMXDKPBA (Data RAM Kernel Program
        Base Address) 51
    BMXDRMSZ (Data RAM Size Register) 54
    BMXDUDBA (Data RAM User Data Base Address) ... 52
    BMXDUPBA (Data RAM User Program
        Base Address) 53
    BMXPFMSZ (Program Flash (PFM) Size) 55
    BMXPUPBA (Program Flash (PFM) User Program
        Base Address) 54
    CiCFG (CAN Baud Rate Configuration) 252
    CiCON (CAN Module Control) 250
    CiFIFOBA (CAN Message Buffer Base Address) 269
    CiFIFOCINn (CAN Module Message Index Register ‘n’)
        274
    CiFIFOCONn (CAN FIFO Control Register ‘n’) 270
    CiFIFOINTn (CAN FIFO Interrupt Register ‘n’) 272
    CiFIFOUAn (CAN FIFO User Address Register ‘n’) . 274
    CiFLTCON0 (CAN Filter Control 0) 260
    CiFLTCON1 (CAN Filter Control 1) 262
    CiFLTCON2 (CAN Filter Control 2) 264
    CiFLTCON3 (CAN Filter Control 3) 266
    CiFSTAT (CAN FIFO Status) 257
    CiINT (CAN Interrupt) 254
    CiRXFn (CAN Acceptance Filter ‘n’) 268
    CiRXMn (CAN Acceptance Filter Mask ‘n’) 259
    CiRXOVF (CAN Receive FIFO Overflow Status) 258
    CiTMR (CAN Timer) 258
    CiTREC (CAN Transmit/Receive Error Count) 257
    CiVEC (CAN Interrupt Code) 256
    CM1CON (Comparator 1 Control) 277
    CMSTAT (Comparator Control Register) 278
    CNCONx (Change Notice Control for PORTx) 162
    CTMUCON (CTMU Control) 285
    CVRCON (Comparator Voltage Reference Control) 281
    DCHxCON (DMA Channel x Control) 99
    DCHxCPTR (DMA Channel x Cell Pointer) 106
    DCHxCSIZ (DMA Channel x Cell-Size) 106
    DCHxDAT (DMA Channel x Pattern Data) 107
    DCHxDPTR (Channel x Destination Pointer) 105
    DCHxDSA (DMA Channel x Destination
        Start Address) 103
    DCHxDSIZ (DMA Channel x Destination Size) 104
    DCHxECON (DMA Channel x Event Control) 100
    DCHxINT (DMA Channel x Interrupt Control) 101
    DCHxSPTR (DMA Channel x Source Pointer) 105
    DCHxSSA (DMA Channel x Source Start Address) . 103
    DCHxSSIZ (DMA Channel x Source Size) 104
    DCRCCON (DMA CRC Control) 96
    DCRCDATA (DMA CRC Data) 98
    DCRCXOR (DMA CRCXOR Enable) 98

© 2014-2019 Microchip Technology Inc.

DEVCFG0 (Device Configuration Word 0 297
DEVCFG1 (Device Configuration Word 1 299
DEVCFG2 (Device Configuration Word 2 301
DEVCFG3 (Device Configuration Word 3 303
DEVID (Device and Revision ID) 305
DMAADDR (DMA Address) 95
DMAADDR (DMR Address) 95
DMACON (DMA Controller Control) 94
DMASTAT (DMA Status) 95
I2CxCON (I2C ‘x’ Control Register (‘x’ = 1 and 2)) ... 198
I2CxSTAT (I2C Status Register) 200
ICxCON (Input Capture x Control) 179
IFSx (Interrupt Flag Status) 64
INTCON (Interrupt Control) 62
INTSTAT (Interrupt Status) 63
IPCx (Interrupt Priority Control) 65
IPTMR Interrupt Proximity Timer) 63
NVMADDR (Flash Address) 70
NVMCON (Programming Control) 69
NVMDATA (Flash Program Data) 71
NVMKEY (Programming Unlock) 70
NVMSRCADDR (Source Data Address) 71
OCxCON (Output Compare x Control) 183
OSCCON (Oscillator Control) 81
PMADDR (Parallel Port Address) 217
PMAEN (Parallel Port Pin Enable) 219
PMCON (Parallel Port Control) 213
PMDIN (Parallel Port Input Data) 218, 223
PMDOUT (Parallel Port Output Data) 218
PMMODE (Parallel Port Mode) 215
PMRADDR (Parallel Port Read Address) 222
PMSTAT (Parallel Port Status (Slave Modes Only) .. 220
PMWADDR (Parallel Port Write Address) 221
REFOCON (Reference Oscillator Control) 85
REFOTRIM (Reference Oscillator Trim) 87
RPnR (Peripheral Pin Select Output) 161
RSWRST (Software Reset) 76
RTCCON (RTC Control) 227
RTCDATE (RTC Date Value) 232
RTCTIME (RTC Time Value) 231
SPIxCON (SPI Control) 188
SPIxCON2 (SPI Control 2) 191
SPIxSTAT (SPI Status) 192
T1CON (Type A Timer Control) 165
TxCON (Type B Timer Control) 170
U1ADDR (USB Address) 127
U1BDTP1 (USB BDT Page 1) 129
U1BDTP2 (USB BDT Page 2) 130
U1BDTP3 (USB BDT Page 3) 130
U1CNFG1 (USB Configuration 1) 131
U1CON (USB Control) 125
U1EIE (USB Error Interrupt Enable) 123
U1EIR (USB Error Interrupt Status) 121
U1EP0-U1EP15 (USB Endpoint Control) 132
U1FRMH (USB Frame Number High) 128
U1FRML (USB Frame Number Low) 127
U1IE (USB Interrupt Enable) 120
U1IR (USB Interrupt) 119
U1OTGCON (USB OTG Control) 117
U1OTGIE (USB OTG Interrupt Enable) 115
U1OTGIR (USB OTG Interrupt Status) 114
U1OTGSTAT (USB OTG Status) 116
U1PWRC (USB Power Control) 118
U1SOF (USB SOF Threshold) 129
U1STAT (USB Status) 124
U1TOK (USB Token) 128
WDTCON (Watchdog Timer Control) 175
Reset SFR Summary 74
Resets 73
Revision History 383
RTCALRM (RTC ALARM Control) 229

S

Serial Peripheral Interface (SPI) 185
Software Simulator (MPLAB SIM) 311
Special Features 295

T

Timer1 Module 163
Timer2/3, Timer4/5 Modules 167
Timing Diagrams
10-Bit Analog-to-Digital Conversion (ASAM = 0, SSRC<2:0> = 000) 349
10-Bit Analog-to-Digital Conversion (ASAM = 1, SSRC<2:0> = 111, SAMC<4:0> = 00001) 350
EJTAG 356
External Clock 325
I/O Characteristics 328
I2Cx Bus Data (Master Mode) 339
I2Cx Bus Data (Slave Mode) 342
I2Cx Bus Start/Stop Bits (Master Mode) 339
I2Cx Bus Start/Stop Bits (Slave Mode) 342
Input Capture (CAPx) 332
OCx/PWM 333
Output Compare (OCx) 333
Parallel Master Port Read 352
Parallel Master Port Write 353
Parallel Slave Port 351
SPIx Master Mode (CKE = 0) 334
SPIx Master Mode (CKE = 1) 335
SPIx Slave Mode (CKE = 0) 336
SPIx Slave Mode (CKE = 1) 337
Timer1, 2, 3, 4, 5 External Clock 331
UART Reception 210
UART Transmission (8-bit or 9-bit Data) 210
Timing Requirements
CLKO and I/O 328
Timing Specifications
I2Cx Bus Data Requirements (Master Mode) 340
I2Cx Bus Data Requirements (Slave Mode) 343
Input Capture Requirements 332
Output Compare Requirements 333
Simple OCx/PWM Mode Requirements 333
SPIx Master Mode (CKE = 0) Requirements 334
SPIx Master Mode (CKE = 1) Requirements 335
SPIx Slave Mode (CKE = 1) Requirements 337
SPIx Slave Mode Requirements (CKE = 0) 336
Timing Specifications (50 MHz)
SPIx Master Mode (CKE = 0) Requirements 360
SPIx Master Mode (CKE = 1) Requirements 360
SPIx Slave Mode (CKE = 1) Requirements 361
SPIx Slave Mode Requirements (CKE = 0) 361

U

UART 203
USB On-The-Go (OTG) 109

V

VCAP pin 306
Voltage Regulator (On-Chip) 306

W

WWW Address 387
WWW, On-Line Support 14

© 2014-2019 Microchip Technology Inc.

APPENDIX A: REVISION HISTORY

Revision A (July 2014)

This is the initial released version of the document.

Revision B (September 2014)

This revision includes the following major changes, which are referenced by their respective chapter in Table A-1.

In addition, minor updates to text and formatting were incorporated throughout the document.

TABLE A-1: MAJOR SECTION UPDATES

Section Name	Update Description
1.0 "Device Overview"	Added the USBOEN pin to the Pinout I/O Descriptions (see Table 1-1).
2.0 "Guidelines for Getting Started with 32-bit MCUs"	Updated the Primary Oscillator loading capacitor calculations (see **2.8.1 "Crystal Oscillator Design Consideration"**). Added **2.11 "Considerations When Interfacing to Remotely Powered Circuits"**
10.0 "USB On-The-Go (OTG)"	Updated the UOEMON bit definitions (see Register 10-20).
31.0 "40 MHz Electrical Characteristics"	Updated DC Characteristics I/O Pin Input Specification parameters DI30 and DI31 (see Table 31-8).

Revision C (November 2014)

This revision includes the following major changes, which are referenced by their respective chapter in Table A-2.

In addition, minor updates to text and formatting were incorporated throughout the document.

TABLE A-2: MAJOR SECTION UPDATES

Section Name	Update Description
20.0 "Parallel Master Port (PMP)"	Added the RDSTART bit to the Parallel Port Control Register (see Table 20-1 and Register 20-1).
31.0 "40 MHz Electrical Characteristics"	Updated the I_{DD} Operating Current DC Characteristics (see Table 31-5). Updated the I_{IDLE} Idle Current DC Characteristics (see Table 31-6). Updated the I_{PD} Power Down Current DC Characteristics (see Table 31-7). Updated the Internal FRC Accuracy (see Table 31-19).
32.0 "50 MHz Electrical Characteristics"	Updated the I_{DD} Operating Current DC Characteristics (see Table 32-2). Updated the I_{IDLE} Idle Current DC Characteristics (see Table 32-3). Updated the I_{PD} Power Down Current DC Characteristics (see Table 32-4).

Revision D (April 2016)

This revision includes the following major changes, which are referenced by their respective chapter in Table A-2.

TABLE A-3: MAJOR SECTION UPDATES

Section Name	Update Description
1.0 "Device Overview"	Removed the USBOEN pin and all trace-related pins from the Pinout I/O Descriptions (see Table 1-1).
2.0 "Guidelines for Getting Started with 32-bit MCUs"	**Section 2.7 "Trace"** was removed. **Section 2.10 "Sosc Design Recommendation"** was removed.
3.0 "CPU"	References to the Shadow Register Set (SRS), which is not supported by PIC32MX1XX/2XX/5XX 64/100-pin Family devices, were removed from **3.1 "Features"**, **3.2.1 "Execution Unit"**, and Coprocessor 0 Registers (Table 3-2).
4.0 "Memory Organization"	The SFR Memory Map was added (see Table 4-1).
5.0 "Interrupt Controller"	The Single Vector Shadow Register Set (SSO) bit (INTCON<16>) was removed (see Register 5-1).
10.0 "USB On-The-Go (OTG)"	The UOEMON bit (U1CNFG1<6>) was removed (see Register 10-20).
23.0 "Controller Area Network (CAN)"	The CAN features (number of messages and FIFOs) were updated. The PIC32 CAN Block Diagram was updated (see Figure 23-1). The following registers were updated: • C1FSTAT (see Register 23-6) • C1RXOVF (see Register 23-7) • C1RXFn (see Register 23-14) • C1FIFOCONn (see Register 23-16) • C1FIFOINTn (see Register 23-17) • C1FIFOUAn (see Register 23-18) • C1FIFOCIn (see Register 23-19) The C1FLTCON4 through C1FLTCON7 registers were removed.
28.0 "Special Features"	The virtual addresses for the Device Configuration Word registers were updated (see Table 28-1).
31.0 "40 MHz Electrical Characteristics"	The EJTAG Timing Characteristics diagram was updated (see Figure 31-23).

© 2014-2019 Microchip Technology Inc.

Revision E (October 2017)

In this revision, the Preliminary status was removed.

Revision F (September 2019)

This revision includes the following major changes, which are referenced by their respective chapter in Table A-4.

TABLE A-4: MAJOR SECTION UPDATES

Section Name	Update Description
"32-bit Microcontrollers (up to 512 KB Flash and 64 KB SRAM) with Audio/Graphics/Touch (HMI), CAN, USB, and Advanced Analog"	Added new tables related to new TFBGA Package: • **TABLE 5: "Pin Names for TFBGA 100-Pin General Purpose devices"** • **TABLE 7: "pin names for TFBGA 100-pin USB devices"**
2.0 "Guidelines for Getting Started with 32-bit MCUs"	Added **2.11 "EMI/EMC/EFT (IEC 61000-4-4 and IEC 61000-4-2) Suppression Considerations"**
11.0 "I/O Ports"	Updated **Table 11-2: "Output Pin Selection"** with a new note
20.0 "Parallel Master Port (PMP)"	• Updated **Register 20-2: "PMMODE: Parallel Port Mode Register"** with a new note • Updated **Register 20-7: "PMSTAT: Parallel Port Status Register (Slave modes only)"** with a new note
31.1 "DC Characteristics"	Added new TFBGA package to **Table 31-3: "Thermal Packaging Characteristics"**
34.0 "Packaging Information"	• Added new **34.1 "Package Marking Information"** • Updated **34.2 "Package Details"** to include the schematics for the new TFBGA Package

NOTES:

© 2014-2019 Microchip Technology Inc.

THE MICROCHIP WEB SITE

Microchip provides online support via our WWW site at www.microchip.com. This web site is used as a means to make files and information easily available to customers. Accessible by using your favorite Internet browser, the web site contains the following information:

- **Product Support** – Data sheets and errata, application notes and sample programs, design resources, user's guides and hardware support documents, latest software releases and archived software
- **General Technical Support** – Frequently Asked Questions (FAQ), technical support requests, online discussion groups, Microchip consultant program member listing
- **Business of Microchip** – Product selector and ordering guides, latest Microchip press releases, listing of seminars and events, listings of Microchip sales offices, distributors and factory representatives

CUSTOMER CHANGE NOTIFICATION SERVICE

Microchip's customer notification service helps keep customers current on Microchip products. Subscribers will receive e-mail notification whenever there are changes, updates, revisions or errata related to a specified product family or development tool of interest.

To register, access the Microchip web site at www.microchip.com. Under "Support", click on "Customer Change Notification" and follow the registration instructions.

CUSTOMER SUPPORT

Users of Microchip products can receive assistance through several channels:

- Distributor or Representative
- Local Sales Office
- Field Application Engineer (FAE)
- Technical Support

Customers should contact their distributor, representative or Field Application Engineer (FAE) for support. Local sales offices are also available to help customers. A listing of sales offices and locations is included in the back of this document.

Technical support is available through the web site at: http://microchip.com/support

PRODUCT IDENTIFICATION SYSTEM

To order or obtain information, e.g., on pricing or delivery, refer to the factory or the listed sales office.

PIC32 MX 1XX F 064 H T - 50 I / PT - XXX

- **Microchip Brand** — PIC32
- **Architecture** — MX
- **Product Groups** — 1XX
- **Flash Memory Family** — F
- **Program Memory Size (KB)** — 064
- **Pin Count** — H
- **Tape and Reel Flag (if applicable)** — T
- **Speed** — 50
- **Temperature Range** — I
- **Package** — PT
- **Pattern** — XXX

Example:

PIC32MX170F512H-50I/PT:
General Purpose PIC32, 32-bit RISC MCU,
512 KB program memory,
64-pin, Industrial temperature,
TQFP package.

Flash Memory Family

Architecture	MX = 32-bit RISC MCU core
Product Groups	1XX = General Purpose microcontroller family 2XX = USB microcontroller family 5XX = USB and CAN microcontroller family
Flash Memory Family	F = Flash program memory
Program Memory Size	064 = 64 KB 128 = 128 KB 256 = 256 KB 512 = 512 KB
Pin Count	H = 64-pin L = 100-pin
Speed	= 40 MHz (blank, no marking on package) 50 = 50 MHz
Temperature Range	I = -40°C to +85°C (Industrial) V = -40°C to +105°C (V-Temp)
Package	PT = 64-Lead (10x10x1 mm) TQFP (Thin Quad Flatpack) PT = 100-Lead (12x12x1 mm) TQFP (Thin Quad Flatpack) PF = 100-Lead (14x14x1 mm) TQFP (Thin Quad Flatpack) MR = 64-Lead (9x9x0.9 mm) QFN (Plastic Quad Flat) GJX = 100-Lead (7x7x1 mm) TFBGA (Thin Fine Pitch Ball Grid Array)
	Note: 100-pin TFBGA is available on select 512KB Flash memory variants only. Please contact your local Microchip Sales Office for information regarding the availability of 100-pin TFBGA package on the other variants.
Pattern	Three-digit QTP, SQTP, Code or Special Requirements (blank otherwise) ES = Engineering Sample

Note the following details of the code protection feature on Microchip devices:

- Microchip products meet the specification contained in their particular Microchip Data Sheet.
- Microchip believes that its family of products is one of the most secure families of its kind on the market today, when used in the intended manner and under normal conditions.
- There are dishonest and possibly illegal methods used to breach the code protection feature. All of these methods, to our knowledge, require using the Microchip products in a manner outside the operating specifications contained in Microchip's Data Sheets. Most likely, the person doing so is engaged in theft of intellectual property.
- Microchip is willing to work with the customer who is concerned about the integrity of their code.
- Neither Microchip nor any other semiconductor manufacturer can guarantee the security of their code. Code protection does not mean that we are guaranteeing the product as "unbreakable."

Code protection is constantly evolving. We at Microchip are committed to continuously improving the code protection features of our products. Attempts to break Microchip's code protection feature may be a violation of the Digital Millennium Copyright Act. If such acts allow unauthorized access to your software or other copyrighted work, you may have a right to sue for relief under that Act.

Information contained in this publication regarding device applications and the like is provided only for your convenience and may be superseded by updates. It is your responsibility to ensure that your application meets with your specifications. MICROCHIP MAKES NO REPRESENTATIONS OR WARRANTIES OF ANY KIND WHETHER EXPRESS OR IMPLIED, WRITTEN OR ORAL, STATUTORY OR OTHERWISE, RELATED TO THE INFORMATION, INCLUDING BUT NOT LIMITED TO ITS CONDITION, QUALITY, PERFORMANCE, MERCHANTABILITY OR FITNESS FOR PURPOSE**.** Microchip disclaims all liability arising from this information and its use. Use of Microchip devices in life support and/or safety applications is entirely at the buyer's risk, and the buyer agrees to defend, indemnify and hold harmless Microchip from any and all damages, claims, suits, or expenses resulting from such use. No licenses are conveyed, implicitly or otherwise, under any Microchip intellectual property rights unless otherwise stated.

Microchip received ISO/TS-16949:2009 certification for its worldwide headquarters, design and wafer fabrication facilities in Chandler and Tempe, Arizona; Gresham, Oregon and design centers in California and India. The Company's quality system processes and procedures are for its PIC® MCUs and dsPIC® DSCs, KEELOQ® code hopping devices, Serial EEPROMs, microperipherals, nonvolatile memory and analog products. In addition, Microchip's quality system for the design and manufacture of development systems is ISO 9001:2000 certified.

QUALITY MANAGEMENT SYSTEM
CERTIFIED BY DNV
= ISO/TS 16949 =

Trademarks

The Microchip name and logo, the Microchip logo, AnyRate, AVR, AVR logo, AVR Freaks, BitCloud, chipKIT, chipKIT logo, CryptoMemory, CryptoRF, dsPIC, FlashFlex, flexPWR, Heldo, JukeBlox, KeeLoq, Kleer, LANCheck, LINK MD, maXStylus, maXTouch, MediaLB, megaAVR, MOST, MOST logo, MPLAB, OptoLyzer, PIC, picoPower, PICSTART, PIC32 logo, Prochip Designer, QTouch, SAM-BA, SpyNIC, SST, SST Logo, SuperFlash, tinyAVR, UNI/O, and XMEGA are registered trademarks of Microchip Technology Incorporated in the U.S.A. and other countries.

ClockWorks, The Embedded Control Solutions Company, EtherSynch, Hyper Speed Control, HyperLight Load, IntelliMOS, mTouch, Precision Edge, and Quiet-Wire are registered trademarks of Microchip Technology Incorporated in the U.S.A.

Adjacent Key Suppression, AKS, Analog-for-the-Digital Age, Any Capacitor, AnyIn, AnyOut, BodyCom, CodeGuard, CryptoAuthentication, CryptoAutomotive, CryptoCompanion, CryptoController, dsPICDEM, dsPICDEM.net, Dynamic Average Matching, DAM, ECAN, EtherGREEN, In-Circuit Serial Programming, ICSP, INICnet, Inter-Chip Connectivity, JitterBlocker, KleerNet, KleerNet logo, memBrain, Mindi, MiWi, motorBench, MPASM, MPF, MPLAB Certified logo, MPLIB, MPLINK, MultiTRAK, NetDetach, Omniscient Code Generation, PICDEM, PICDEM.net, PICkit, PICtail, PowerSmart, PureSilicon, QMatrix, REAL ICE, Ripple Blocker, SAM-ICE, Serial Quad I/O, SMART-I.S., SQI, SuperSwitcher, SuperSwitcher II, Total Endurance, TSHARC, USBCheck, VariSense, ViewSpan, WiperLock, Wireless DNA, and ZENA are trademarks of Microchip Technology Incorporated in the U.S.A. and other countries.

SQTP is a service mark of Microchip Technology Incorporated in the U.S.A.

Silicon Storage Technology is a registered trademark of Microchip Technology Inc. in other countries.

GestIC is a registered trademark of Microchip Technology Germany II GmbH & Co. KG, a subsidiary of Microchip Technology Inc., in other countries.

All other trademarks mentioned herein are property of their respective companies.

© 2018, Microchip Technology Incorporated, All Rights Reserved.

ISBN: 978-1-5224-4827-3

Worldwide Sales and Service

AMERICAS

Corporate Office
2355 West Chandler Blvd.
Chandler, AZ 85224-6199
Tel: 480-792-7200
Fax: 480-792-7277
Technical Support:
http://www.microchip.com/support
Web Address:
www.microchip.com

Atlanta
Duluth, GA
Tel: 678-957-9614
Fax: 678-957-1455

Austin, TX
Tel: 512-257-3370

Boston
Westborough, MA
Tel: 774-760-0087
Fax: 774-760-0088

Chicago
Itasca, IL
Tel: 630-285-0071
Fax: 630-285-0075

Dallas
Addison, TX
Tel: 972-818-7423
Fax: 972-818-2924

Detroit
Novi, MI
Tel: 248-848-4000

Houston, TX
Tel: 281-894-5983

Indianapolis
Noblesville, IN
Tel: 317-773-8323
Fax: 317-773-5453
Tel: 317-536-2380

Los Angeles
Mission Viejo, CA
Tel: 949-462-9523
Fax: 949-462-9608
Tel: 951-273-7800

Raleigh, NC
Tel: 919-844-7510

New York, NY
Tel: 631-435-6000

San Jose, CA
Tel: 408-735-9110
Tel: 408-436-4270

Canada - Toronto
Tel: 905-695-1980
Fax: 905-695-2078

ASIA/PACIFIC

Australia - Sydney
Tel: 61-2-9868-6733

China - Beijing
Tel: 86-10-8569-7000

China - Chengdu
Tel: 86-28-8665-5511

China - Chongqing
Tel: 86-23-8980-9588

China - Dongguan
Tel: 86-769-8702-9880

China - Guangzhou
Tel: 86-20-8755-8029

China - Hangzhou
Tel: 86-571-8792-8115

China - Hong Kong SAR
Tel: 852-2943-5100

China - Nanjing
Tel: 86-25-8473-2460

China - Qingdao
Tel: 86-532-8502-7355

China - Shanghai
Tel: 86-21-3326-8000

China - Shenyang
Tel: 86-24-2334-2829

China - Shenzhen
Tel: 86-755-8864-2200

China - Suzhou
Tel: 86-186-6233-1526

China - Wuhan
Tel: 86-27-5980-5300

China - Xian
Tel: 86-29-8833-7252

China - Xiamen
Tel: 86-592-2388138

China - Zhuhai
Tel: 86-756-3210040

ASIA/PACIFIC

India - Bangalore
Tel: 91-80-3090-4444

India - New Delhi
Tel: 91-11-4160-8631

India - Pune
Tel: 91-20-4121-0141

Japan - Osaka
Tel: 81-6-6152-7160

Japan - Tokyo
Tel: 81-3-6880- 3770

Korea - Daegu
Tel: 82-53-744-4301

Korea - Seoul
Tel: 82-2-554-7200

Malaysia - Kuala Lumpur
Tel: 60-3-7651-7906

Malaysia - Penang
Tel: 60-4-227-8870

Philippines - Manila
Tel: 63-2-634-9065

Singapore
Tel: 65-6334-8870

Taiwan - Hsin Chu
Tel: 886-3-577-8366

Taiwan - Kaohsiung
Tel: 886-7-213-7830

Taiwan - Taipei
Tel: 886-2-2508-8600

Thailand - Bangkok
Tel: 66-2-694-1351

Vietnam - Ho Chi Minh
Tel: 84-28-5448-2100

EUROPE

Austria - Wels
Tel: 43-7242-2244-39
Fax: 43-7242-2244-393

Denmark - Copenhagen
Tel: 45-4450-2828
Fax: 45-4485-2829

Finland - Espoo
Tel: 358-9-4520-820

France - Paris
Tel: 33-1-69-53-63-20
Fax: 33-1-69-30-90-79

Germany - Garching
Tel: 49-8931-9700

Germany - Haan
Tel: 49-2129-3766400

Germany - Heilbronn
Tel: 49-7131-72400

Germany - Karlsruhe
Tel: 49-721-625370

Germany - Munich
Tel: 49-89-627-144-0
Fax: 49-89-627-144-44

Germany - Rosenheim
Tel: 49-8031-354-560

Israel - Ra'anana
Tel: 972-9-744-7705

Italy - Milan
Tel: 39-0331-742611
Fax: 39-0331-466781

Italy - Padova
Tel: 39-049-7625286

Netherlands - Drunen
Tel: 31-416-690399
Fax: 31-416-690340

Norway - Trondheim
Tel: 47-7288-4388

Poland - Warsaw
Tel: 48-22-3325737

Romania - Bucharest
Tel: 40-21-407-87-50

Spain - Madrid
Tel: 34-91-708-08-90
Fax: 34-91-708-08-91

Sweden - Gothenberg
Tel: 46-31-704-60-40

Sweden - Stockholm
Tel: 46-8-5090-4654

UK - Wokingham
Tel: 44-118-921-5800
Fax: 44-118-921-5820

© 2014-2019 Microchip Technology Inc.