ATtiny3217 Xplained Pro

ATtiny3217 Xplained Pro

Preface

The ATtiny3217 Xplained Pro evaluation kit is a hardware platform to evaluate the ATtiny3217 microcontroller.

Supported by the Atmel Studio integrated development platform, the kit provides easy access to the features of the ATtiny3217 and explains how to integrate the device into a custom design.

The Xplained Pro MCU series evaluation kits include on-board Embedded Debuggers. No external tools are necessary to program or debug the ATtiny3217.

Xplained Pro extension kits offer additional peripherals to extend the features of the board and ease the development of custom designs.

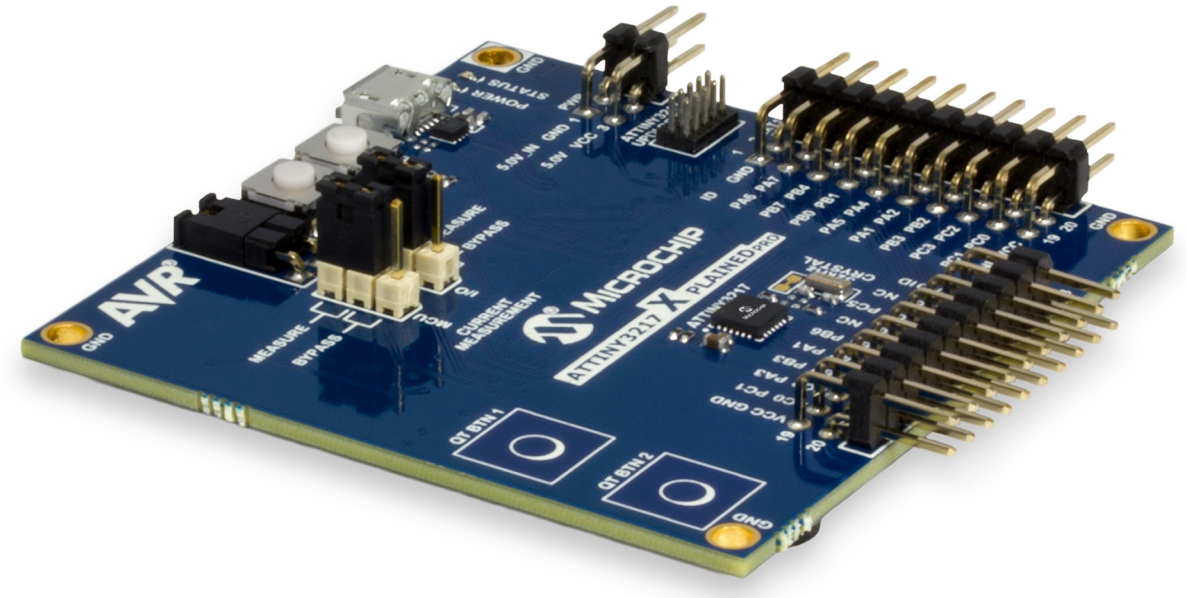

Table of Contents

Preface..... 1

1. Introduction.....4
   - 1.1. Features..... 4
   - 1.2. Kit Overview..... 4

2. Getting Started..... 6
   - 2.1. Xplained Pro Quick Start.....6
   - 2.2. Design Documentation and Relevant Links..... 6

3. Xplained Pro.....8
   - 3.1. Embedded Debugger..... 8
   - 3.2. Xplained Pro Analog Module (XAM).....9
     - 3.2.1. Overview.....9
     - 3.2.2. EDBG Interface.....10
     - 3.2.3. Sample Rate..... 10
     - 3.2.4. Measurement Ranges and Accuracy.....10
   - 3.3. Hardware Identification System.....11
   - 3.4. Power Sources..... 11
   - 3.5. Xplained Pro Headers and Connectors.....12
     - 3.5.1. Xplained Pro Standard Extension Header..... 12
     - 3.5.2. Xplained Pro Power Header..... 13

4. Hardware User Guide.....14
   - 4.1. Power Distribution..... 14
   - 4.2. Connectors..... 14
     - 4.2.1. Xplained Pro Standard Extension Headers..... 15
     - 4.2.2. UPDI Debug Connector.....17
   - 4.3. Peripherals..... 18
     - 4.3.1. Mechanical Buttons..... 18
     - 4.3.2. Crystal.....18
     - 4.3.3. LED.....19
     - 4.3.4. QTouch® Button..... 19
   - 4.4. Embedded Debugger Implementation.....19
     - 4.4.1. Unified Program Debug Interface..... 20
     - 4.4.2. Virtual COM Port.....20
     - 4.4.3. Data Gateway Interface..... 20
     - 4.4.4. XAM Configuration.....21
   - 4.5. Kit Modifications..... 22
     - 4.5.1. Connecting the 32 KHz Crystal.....24
     - 4.5.2. Operation at Other Voltages..... 25

5. Appendix.....27
   - 5.1. Getting Started with IAR.....27

6. Hardware Revision History and Known Issues....29
6.1. Identifying Product ID and Revision....29
6.2. Revision 1....29
7. Document Revision History....30
The Microchip Web Site....31
Customer Change Notification Service....31
Customer Support....31
Microchip Devices Code Protection Feature....31
Legal Notice....32
Trademarks....32
Quality Management System Certified by DNV....33
Worldwide Sales and Service....34

1. Introduction

1.1 Features

- ATtiny3217 microcontroller
- Two mechanical user buttons
- Two QTouch® buttons
- One yellow user LED
- 32.768 kHz crystal
- Two Xplained Pro extension headers
- Embedded Debugger
  - Auto-ID for board identification in Atmel Studio
  - One yellow status LED
  - One green board power LED
  - Symbolic debug of complex data types including scope information
  - Programming and debugging, including power measurements
  - Data Gateway Interface: SPI, I^2C, two GPIOs
  - Virtual COM Port (CDC)
- Embedded current measurement circuitry (XAM)
  - Measures power consumption of the ATtiny3217 and/or peripherals
  - Measures current between 100 nA and 400 mA
  - Current measurement data are shown in Microchip Data Visualizer
- USB powered
- Supported with application examples in Atmel START

1.2 Kit Overview

The ATtiny3217 Xplained Pro evaluation kit is a hardware platform to evaluate the ATtiny3217.

The kit offers a set of features that enables the ATtiny3217 user to get started with the ATtiny3217 peripherals right away and to get an understanding of how to integrate the device into their own design.

Figure 1-1. ATtiny3217 Xplained Pro Evaluation Kit Overview

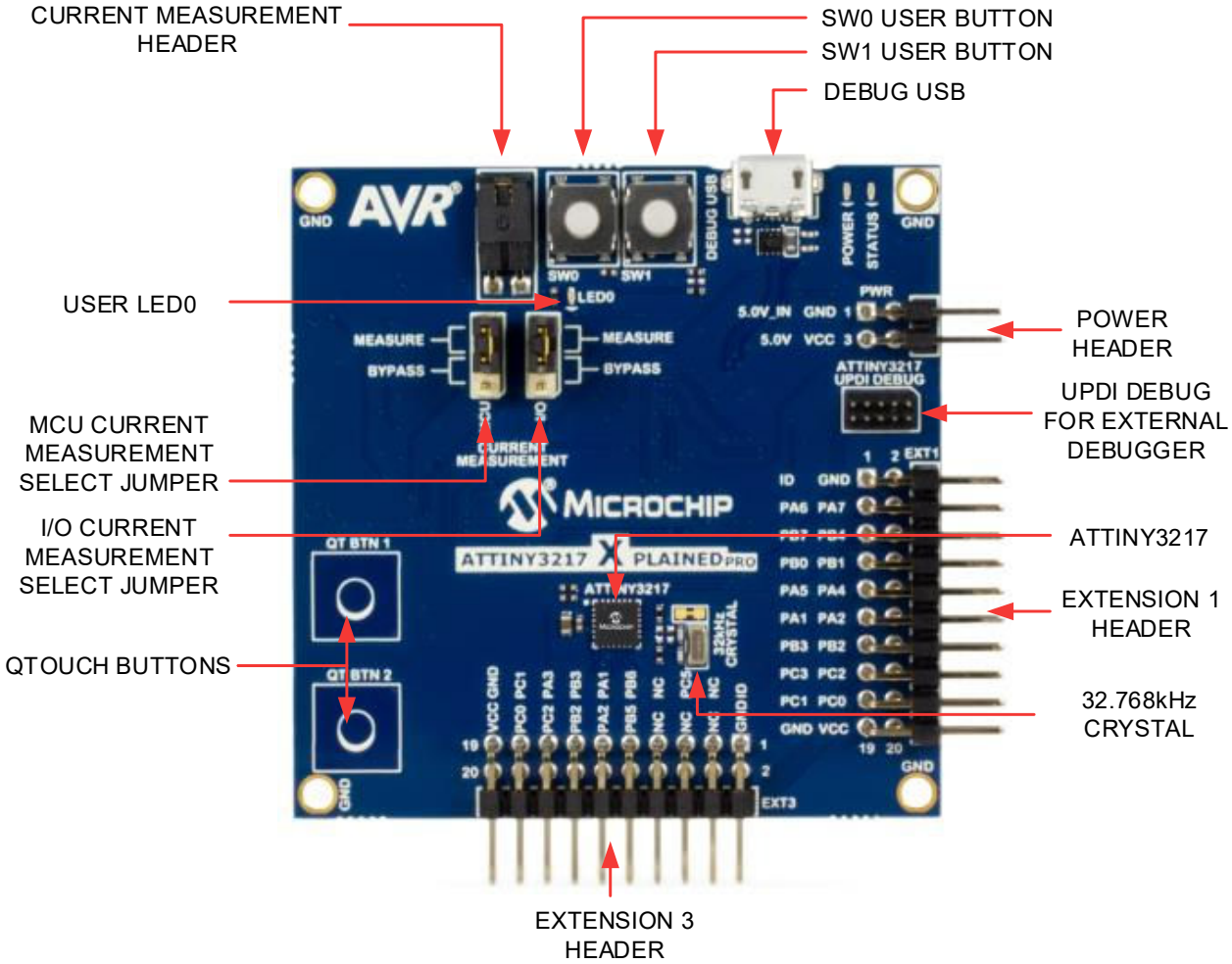

2. Getting Started

2.1 Xplained Pro Quick Start

Steps to start exploring the Xplained Pro platform:

1. Download and install Atmel Studio.
2. Launch Atmel Studio.
3. Connect the Debug USB port on the evaluation kit to the computer using a USB cable (Standard-A to Micro-B or Micro-AB).

When the Xplained Pro MCU kit is connected to the computer for the first time, the operating system installs the driver software automatically. This driver supports 32-bit and 64-bit versions of Microsoft® Windows® XP, Windows Vista®, Windows 7, Windows 8, Windows 10, and Windows Server 2012.

When the Xplained Pro MCU board is powered, the power LED (green) glows, and the Atmel Studio automatically detects the specific Xplained Pro MCU and extension board(s) that are connected. The landing page of the kit in the Atmel Studio has an option to launch the Atmel Software Framework (ASF) and the Atmel START example application codes for the kit. The ATtiny3217 device is programmed and debugged by the on-board embedded debugger and therefore no external programmer or debugger tool is required.

2.2 Design Documentation and Relevant Links

The following list contains links to the most relevant documents and software for the ATtiny3217 Xplained Pro.

- **Xplained products** - Xplained evaluation kits are a series of easy-to-use evaluation kits for Microchip microcontrollers and other Microchip products.
  - Xplained Nano - used for low pin-count devices and provides a minimalistic solution with access to all I/O pins of the target microcontroller.
  - Xplained Mini - used for medium pin-count devices and adds Arduino Uno compatible header footprint and a prototyping area.
  - Xplained Pro - used for medium to high pin-count devices that features advanced debugging and standardized extensions for peripheral functions.

  Note: All the above kits have on-board programmers/debuggers, which creates a set of low-cost boards for evaluation and demonstration of features and capabilities of different Microchip products.
- **Atmel Studio** - Free IDE for the development of C/C++ and assembler code for microcontrollers.
- **http://start.atmel.com/** - Atmel START is an online tool that helps the user to select and configure software components and tailor your embedded application in a usable and optimized manner.
- **EDBG User Guide** - User guide containing more information about the on-board Embedded Debugger.
- **IAR Embedded Workbench® for AVR®** - This is a commercial C/C++ compiler that is available for 8-bit AVR. There is a 30 day evaluation version as well as a 4 KB code size limited kick-start version available from their website.
- **QTouch® tools** - A collection of tools to design capacitive touch applications.
- **QTouch® Design Guide** - PTC Robustness design guide document for touch sensor development.

- **Data Visualizer** - Data Visualizer is a program used for processing and visualizing data. The Data Visualizer can receive data from various sources such as the Embedded Debugger Data Gateway Interface found on Xplained Pro boards and COM Ports.
- **ATtiny3217 Xplained Pro website** - Kit information, latest user guide and design documentation.
- **ATtiny3217 Xplained Pro on Microchip Direct** - Purchase this kit on Microchip Direct.

3. Xplained Pro

Xplained Pro is an evaluation platform which contains a series of microcontroller boards (evaluation kits) and extension boards. Atmel Studio is used to program and debug the microcontrollers on these boards. Atmel Studio includes Advanced Software Framework (ASF) and Atmel START, which has drivers and demo code, and Data Visualizer, which supports data streaming and advanced debugging. Xplained Pro evaluation kits can be connected to a wide range of Xplained Pro extension boards through standardized headers and connectors. Xplained Pro extension boards have identification (ID) chips to uniquely identify which boards are connected to the Xplained Pro evaluation kits.

3.1 Embedded Debugger

The ATtiny3217 Xplained Pro contains an Embedded Debugger (EDBG) for on-board debugging. The EDBG is a USB composite device with the following interfaces:

- Debugger
- Virtual COM Port
- Data Gateway Interface (DGI)

The EDBG can program and debug the ATtiny3217 with the help of Atmel Studio. The UPDI interface is connected between the EDBG and the ATtiny3217 on the ATtiny3217 Xplained Pro.

The Virtual COM Port is connected to a UART on the ATtiny3217 and provides an easy way to communicate with the target application through terminal software. It offers variable baud rate, parity, and stop bit settings. The settings on the ATtiny3217 must match the settings given in the terminal software.

Info: The Virtual COM Port in the EDBG requires the terminal software to set the Data Terminal Ready (DTR) signal to enable the UART pins connected to the ATtiny3217. If the DTR signal is not enabled, the UART pins on the EDBG are kept in tri-state (high-z) to render the COM Port not usable. The DTR signal is automatically set by some terminal software, but it may have to be manually enabled in your terminal.

The DGI consists of several physical interfaces for bidirectional communication with the host computer. Communication over the interfaces is bidirectional. It can be used to send event values and data from the ATtiny3217. Traffic over the interfaces can be timestamped by the EDBG for more accurate tracking of events, but timestamping reduces the maximal data throughput. The Data Visualizer is used to send and receive data through DGI.

The EDBG controls two LEDs on the ATtiny3217 Xplained Pro; a power LED and a status LED. The following table provides details on how the LEDs are controlled in different operation modes.

Table 3-1. EDBG LED Control

Mode	Power LED	Status LED
Normal mode	The power LED is ON when power is applied to the board.	Activity indicator, the LED flashes when any communication happens to the EDBG.
Bootloader mode (idle)	The power LED and the status LED blink simultaneously.	
Bootloader mode (firmware upgrade)	The power LED and the status LED blink in an alternating pattern.	

For additional information on the EDBG, see the EDBG User Guide.

3.2 Xplained Pro Analog Module (XAM)

3.2.1 Overview

The Xplained Pro Analog Module (XAM) extends the embedded debugger with high dynamic range current measurement. This enables power profiling of the target system.

Figure 3-1. XAM Block Diagram

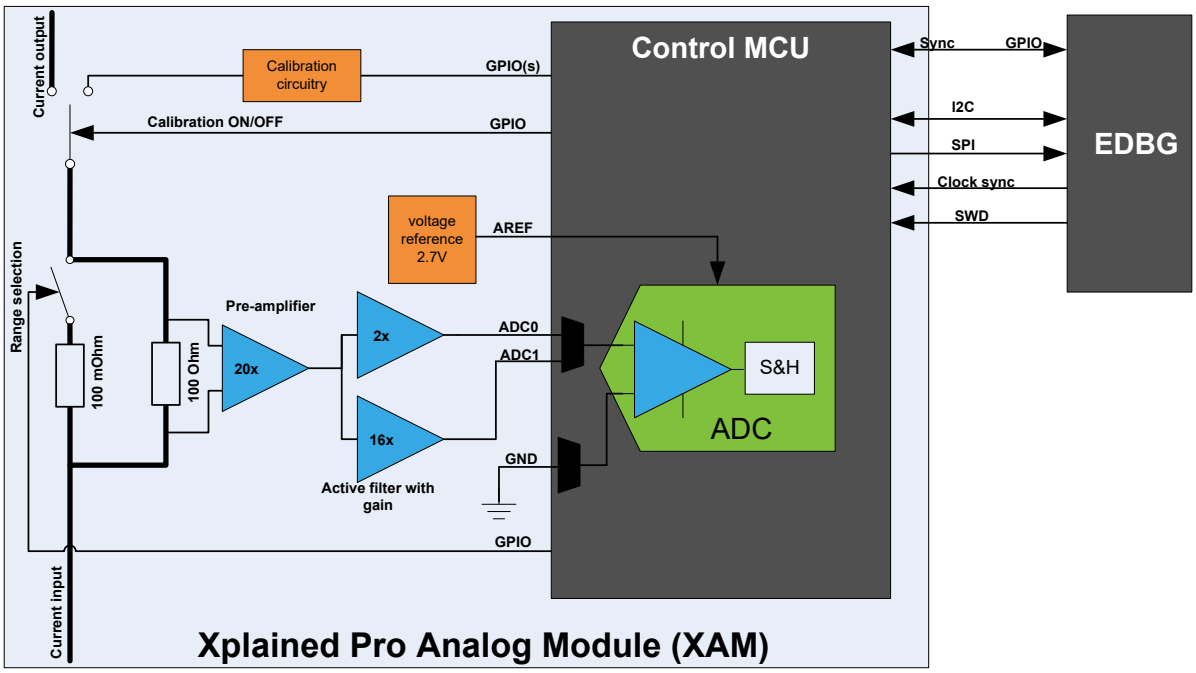

The XAM consists of:

- Calibration circuitry
- Voltage reference circuitry
- Analog front-end:
  - Shunt resistors with a range selection switch
  - Pre-amplifier
  - Two active filters with gain

- Control MCU
  - Analog-to-Digital Converter
  - Signal processing
  - Control/communication interface to the EDBG

The current measurement front-end is a high side shunt measurement with a pre-amplifier and a second active filter stage with gain as shown in Figure 3-1. The wide dynamic range is achieved by four measurement ranges, which are defined by two shunt resistors and the two parallel second stage active filters with gain.

3.2.2 EDBG Interface

The XAM is connected to the EDBG with the following interfaces:

- **I^2C**: This is used to control and configure the XAM.
- **SPI**: Current measurement data is streamed to the EDBG via this interface. This is a unidirectional channel from the XAM to the EDBG.
- **SWD**: The MCU in the XAM is programmed via SWD from the EDBG.
- **Clock sync**: Signal used to synchronize ADC measurements with the EDBG.
- **Reference clock**: Reference clock for the XAM.

3.2.3 Sample Rate

The raw sampling rate of the XAM is up to 250 kHz and with the default averaging configuration (average of 16 samples), the actual output of the XAM is 16.67 ksps.

Info: The XAM output sample rate is not an integer fraction of the raw sampling.

3.2.4 Measurement Ranges and Accuracy

The XAM has four measurement ranges. These are defined by two shunt resistors and two gain stages.

Table 3-2. XAM Measurement Ranges and Accuracy

Measurement Range	Hardware	Resolution	Accuracy	Comments
Range 1	Low current shunt and high gain stage	20 nA	1 LSB ±1%	Accuracy will decrease below 1 µA. Typical accuracy for 300 nA is 1 LSB ±10%.
Range 2	Low current shunt and low gain stage	150 nA	1 LSB ±1%	
Range 3	High current shunt and high gain stage	10 µA	1 LSB ±1%	
Range 4	High current shunt and low gain stage	100 µA	1 LSB ±1%	Accuracy will decrease above 100 mA. Typical accuracy is 1 LSB ±5% at 400 mA. Maximum current is 400 mA.

The ranges are automatically switched by the XAM to achieve the best measurement results, and the currently active range is visualized in the Data Visualizer front-end tool. The maximum voltage drop over the shunt resistor is 100 mV, and the XAM switches the range automatically before reaching this limit.

3.3 Hardware Identification System

All Xplained Pro extension boards come with an identification chip (ATSHA204A CryptoAuthentication™ chip) to uniquely identify the boards that are connected to the Xplained Pro evaluation kit. This chip contains information that identifies the extension with its name and some extra data. When an Xplained Pro extension is connected to an Xplained Pro evaluation kit, the information is read and sent to the Atmel Studio. The following table shows the data fields stored in the ID chip with example content.

Table 3-3. Xplained Pro ID Chip Content

Data Field	Data Type	Example Content
Manufacturer	ASCII string	Microchip'\0'
Product name	ASCII string	Segment LCD1 Xplained Pro'\0'
Product revision	ASCII string	02'\0'
Product serial number	ASCII string	1774020200000010'\0'
Minimum voltage [mV]	uint16_t	3000
Maximum voltage [mV]	uint16_t	3600
Maximum current [mA]	uint16_t	30

3.4 Power Sources

The ATtiny3217 Xplained Pro kit can be powered by several power sources, as listed in the table below.

Table 3-4. Power Sources for ATtiny3217 Xplained Pro

Power Source	Voltage Requirements	Current Requirements	Connector Marking
External Power	5V ±2% (±100 mV) for USB host operation. 4.3V to 5.5V if a USB host operation is not required.	Maximum recommended current is 2A.	PWR
Embedded debugger USB	4.4V to 5.25V (according to USB spec.)	500 mA (according to USB spec.)	DEBUG USB

The kit automatically detects which power sources are available and chooses which one to use according to the following priority:

1. External power.
2. Embedded Debugger USB.

Info: External power is required when 500 mA from a USB connector is not enough to power the board with possible extension boards.

3.5 Xplained Pro Headers and Connectors

3.5.1 Xplained Pro Standard Extension Header

All Xplained Pro kits have many dual-row, 20-pin, 100-mil extension headers. The Xplained Pro MCU boards have male headers, while the Xplained Pro extensions have their female counterparts. The following table provides the pin description of all the connected pins.

Info: Not all pins are always connected on all extension headers.

The extension headers can be used to connect a variety of Xplained Pro extensions to Xplained Pro MCU boards or to access the pins of the target microcontroller on the Xplained Pro boards.

Table 3-5. Xplained Pro Standard Extension Header

Pin Number	Pin Name	Description
1	ID	Pin to communicate with the ID chip on an extension board.
2	GND	Ground
3	ADC(+)	Analog-to-Digital Converter; alternatively, a pin for the positive terminal of a differential ADC.
4	ADC(-)	Analog-to-Digital Converter; alternatively, a pin for the negative terminal of a differential ADC.
5	GPIO1	General purpose I/O pin.
6	GPIO2	General purpose I/O pin.
7	PWM(+)	Pulse width modulation; alternatively, a pin for the positive part of a differential PWM.
8	PWM(-)	Pulse width modulation; alternatively, a pin for the negative part of a differential PWM.
9	IRQ/GPIO	Interrupt request pin and/or general purpose I/O pin.
10	SPI_SS_B/ GPIO	Slave select pin for Serial Peripheral Interface (SPI) and/or general purpose I/O pin.
11	I^2C_SDA	Data pin for I^2C interface. Always connected, bus type.
12	I^2C_SCL	Clock pin for I^2C interface. Always connected, bus type.
13	UART_RX	Receiver pin of target device UART.

Pin Number	Pin Name	Description
14	UART_TX	Transmitter pin of target device UART.
15	SPI_SS_A	Slave select for SPI. This pin should preferably not be connected to anything else.
16	SPI_MOSI	SPI master out slave in pin. Always connected, bus type.
17	SPI_MISO	SPI master in slave out pin. Always connected, bus type.
18	SPI_SCK	SPI clock pin. Always connected, bus type.
19	GND	Ground pin for extension boards.
20	VCC	Power pin for extension boards.

3.5.2 Xplained Pro Power Header

The power header can be used to connect external power to the ATtiny3217 Xplained Pro kit. The kit automatically detects and switches to an external power, if supplied. The power header can also be used to supply power to external peripherals or extension boards. Ensure that the total current does not exceed the recommended current limit of the on-board regulator when using the 3.3V pin.

Table 3-6. Xplained Pro Power Header

Pin Number	Pin Name	Description
1	VEXT_P5V0	External 5V input pin
2	GND	Ground pin
3	VCC_P5V0	Unregulated 5V pin (an output, derived from one of the input sources)
4	VCC_P3V3	Regulated 3.3V pin (an output, used as the main power supply for the kit)

4. Hardware User Guide

4.1 Power Distribution

ATtiny3217 Xplained Pro has two power sources; EDBG USB and external 5.0V. The kit will automatically select the power source. The kit has two on-board 3.3V voltage regulators; one for the EDBG and XAM, and one for the ATtiny3217 and other peripherals.

Figure 4-1. Power Supply Block Diagram

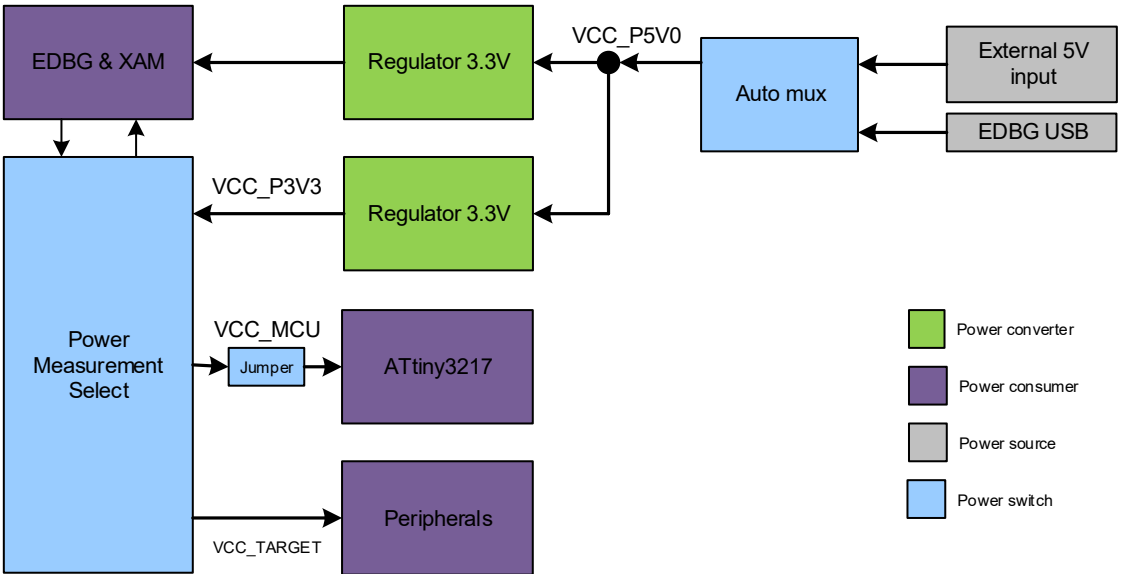

4.2 Connectors

The following sections describe the implementation of the relevant connectors and headers on the ATtiny3217 Xplained Pro and their connection to the ATtiny3217. The tables of connections in the sections also describe which signals are shared between the headers and on-board functionality. The figure below shows all available connectors and jumpers on ATtiny3217 Xplained Pro.

Figure 4-2. ATtiny3217 Xplained Pro Connector Overview

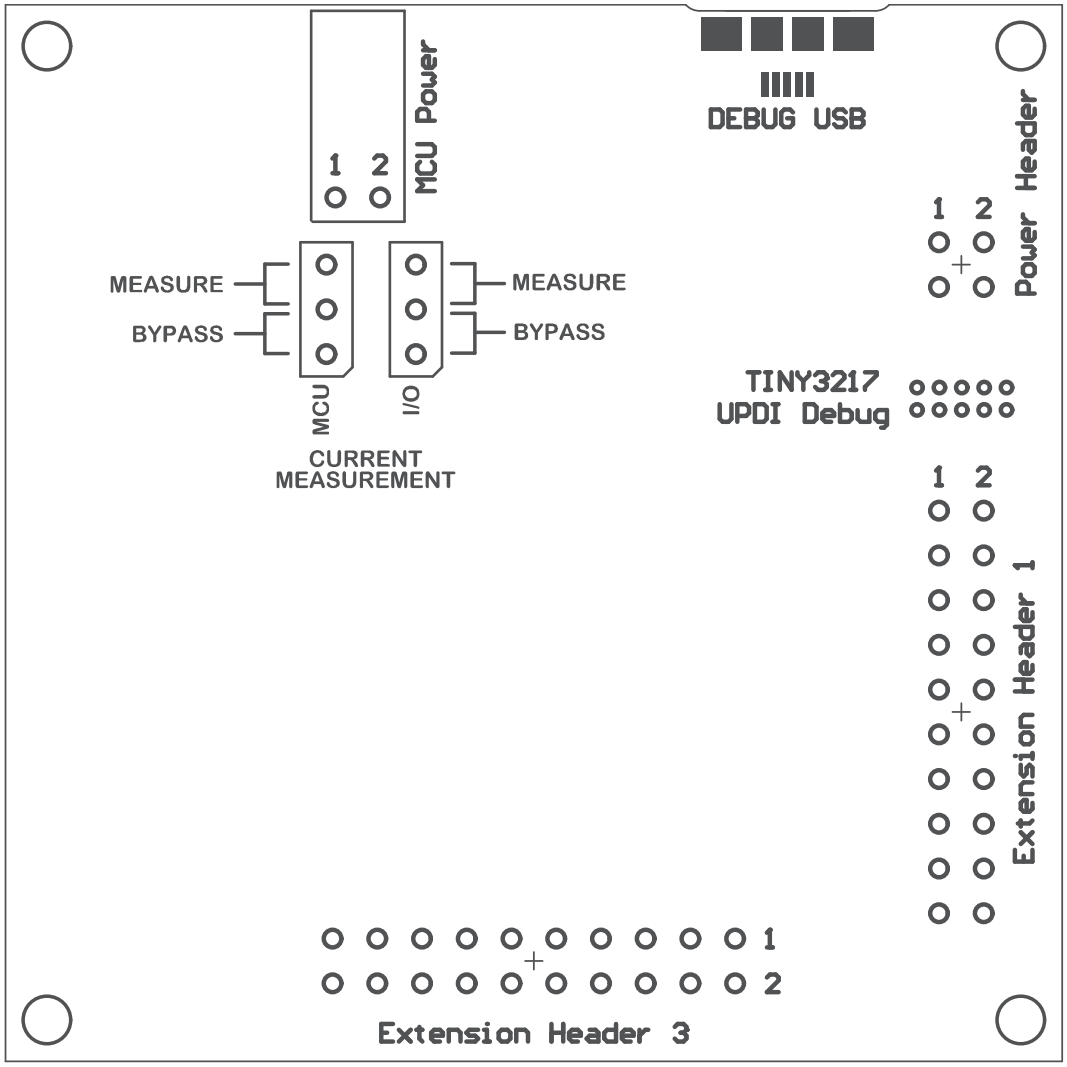

4.2.1 Xplained Pro Standard Extension Headers

The ATtiny3217 Xplained Pro headers EXT1 and EXT3 offer access to the I/O of the microcontroller in order to expand the board, e.g. by connecting extensions to the board. These headers are based on the standard extension header specified in the table below. The headers have a pitch of 2.54 mm.

Table 4-1. Extension Header EXT1

EXT1 Pin	ATtiny3217 Pin	Function	Shared Functionality
1 [ID]	-	-	Communication line to the ID chip on an extension board
2 [GND]	-	-	Ground
3 [ADC(+)]	PA6	AIN6	QTouch Button 1
4 [ADC(-)]	PA7	AIN7	QTouch Button 2
5 [GPIO1]	PB7	GPIO	-

EXT1 Pin	ATtiny3217 Pin	Function	Shared Functionality
6 [GPIO2]	PB4	GPIO	LED0
7 [PWM(+)]	PB0	TC/W0	-
8 [PWM(-)]	PB1	TC/W1	-
9 [IRQ/GPIO]	PA5	IRQ/GPIO	-
10 [SPI_SS_B/GPIO]	PA4	GPIO	-
11 [I²C_SDA]	PA1	*I²C SDA*	EXT3 and EDBG I²C
12 [I²C_SCL]	PA2	*I²C SCL*	EXT3 and EDBG I²C
13 [USART_RX]	PB3	UART RX	EXT3, EDBG CDC, and Crystal (1)
14 [USART_TX]	PB2	UART TX	EXT3, EDBG CDC, and Crystal (1)
15 [SPI_SS_A]	PC3	*SPI SS*	-
16 [SPI_MOSI]	PC2	*SPI MOSI*	EXT3 and EDBG SPI
17 [SPI_MISO]	PC1	*SPI MISO*	EXT3 and EDBG SPI
18 [SPI_SCK]	PC0	*SPI SCK*	EXT3 and EDBG SPI
19 [GND]	-	-	Ground
20 [VCC]	-	-	Power for extension board

1) Not connected by default, see 4.5.1 Connecting the 32 KHz Crystal for more information.

Note: Signal functions in *italic* use alternative pin location. These have to be configured in the PORTMUX register of the device.

Table 4-2. Extension Header EXT3

EXT3 Pin	ATtiny3217 Pin	Function	Shared Functionality
1 [ID]	-	-	Communication line to the ID chip on an extension board
2 [GND]	-	-	Ground
3 [ADC(+)]	-	-	
4 [ADC(-)]	-	-	
5 [GPIO1]	PC5	GPIO	SW1 and UPDI debug connector
6 [GPIO2]	-	-	
7 [PWM(+)]	-	-	
8 [PWM(-)]	-	-	
9 [IRQ/GPIO]	PB6	IRQ/GPIO	EDBG DGI
10 [SPI_SS_B/GPIO]	PB5	GPIO	SW0 and EDBG DGI
11 [I²C_SDA]	PA1	*I²C SDA*	EXT1 and EDBG I²C

EXT3 Pin	ATtiny3217 Pin	Function	Shared Functionality
12 [I²C_SCL]	PA2	*I²C SCL*	EXT1 and EDBG I²C
13 [USART_RX]	PB3	UART RX	EXT1, EDBG CDC, and Crystal (1)
14 [USART_TX]	PB2	UART TX	EXT1, EDBG CDC, and Crystal (1)
15 [SPI_SS_A]	PA3	GPIO / SPI_SS	-
16 [SPI_MOSI]	PC2	*SPI MOSI*	EXT1 and EDBG SPI
17 [SPI_MISO]	PC1	*SPI MISO*	EXT1 and EDBG SPI
18 [SPI_SCK]	PC0	*SPI SCK*	EXT1 and EDBG SPI
19 [GND]	-	-	Ground
20 [VCC]	-	-	Power for extension board

1) Not connected by default, see 4.5.1 Connecting the 32 KHz Crystal for more information.

Note: Signal functions in *italic* use alternative pin location. These have to be configured in the PORTMUX register of the device.

4.2.2 UPDI Debug Connector

ATtiny3217 Xplained Pro has a 10-pin 50-mil UPDI Debug Connector that can be used to attach external debuggers to the ATtiny3217.

Table 4-3. UPDI Debug Connector

UPDI Debug Connector Pin	Pin/Net	Function	Shared Functionality
1	-	-	
2	GND	Ground	
3	PA0	UPDI/RESET	EDBG
4	VCC_TARGET_P3V3	ATtiny3217 voltage	
5	-	-	
6	PC5	-	SW1 and EXT3
7	-	-	
8	-	-	
9	-	-	
10	-	-	

Note:

1. PA0 is configured as UPDI by default. PA0 can be fused to be RESET or GPIO, but this is prevented by the EDBG as this will disable all further programming and debugging by the EDBG.
2. Even though PC5 is connected to the UPDI debug connector this pin is not used for programming or debugging.

4.3 Peripherals

4.3.1 Mechanical Buttons

ATtiny3217 Xplained Pro contains two generic user configurable mechanical buttons. When a button is pressed it will drive the I/O line to GND.

Info: There is no pull-up resistor connected to the generic user button SW0. Remember to enable the internal pull-up in the ATtiny3217 to use the button. There is an on-board pull-up resistor connected to the generic user button SW1. There is no need to enable the internal pull-up in the ATtiny3217 to use the button.

Table 4-4. Mechanical Buttons

ATtiny3217 Pin	Silkscreen Text	Shared Functionality
PB5	SW0	EXT3 and EDBG DGI
PC5	SW1/RST	EXT3 and UPDI debug connector

Info: PC5 is connected to a button that states 'SW1/RST' because PC5 had reset capabilities in an early version of the ATtiny3217. Today the ATtiny3217 does not have any reset capabilities on PC5.

4.3.2 Crystal

The ATtiny3217 Xplained Pro kit contains a 32.768 kHz crystal, which can be used as clock source for the ATtiny3217 device. The crystal has a cut-strap next to it, which can be used to measure the oscillator safety factor. This is done by cutting the strap and adding a resistor across the strap. More information about oscillator allowance and safety factor can be found in the AVR4100 application note from Microchip.

The 32.768 kHz crystal on the ATtiny3217 Xplained Pro is a Kyocera Crystal Device Corporation ST3215SB32768E0HPWBB. Kyocera has formally tested and matched the crystal to the ATtiny3217. The test report is available in the design documentation located at the ATtiny3217 Xplained Pro website.

Info: The crystal is not connected to the device by default as the crystal pins on the device are shared with the UART module. The UART interface is lost if the crystal is needed by the application. See Kit Modifications for instructions on how to modify the kit for crystal operation.

Info: The Kyocera Crystal Device Corporation crystals that are matched with Microchip products can be found on their website: http://prdct-search.kyocera.co.jp/crystal-ic/?p=en_search/

Table 4-5. External 32.768 kHz Crystal

ATtiny3217 Pin	Function
PB2	XOUT32
PB3	XIN32

Related Links

2.2 Design Documentation and Relevant Links

4.3.3 LED

There is one yellow LED available on the ATtiny3217 Xplained Pro board that can be turned ON and OFF. The LED can be activated by connecting the I/O line to GND.

Table 4-6. LED Connection

ATtiny3217 Pin	Silkscreen Text	Shared Functionality
PB4	LED0	EXT1

4.3.4 QTouch® Button

There are two self-capacitance buttons available on the ATtiny3217 Xplained Pro board, which can be used as input buttons for an application. These QTouch buttons are intended to be driven by the built-in Peripheral Touch Controller (PTC) of the device.

To get started using the QTouch buttons and the PTC, there is a similar example project that can be opened here: QTouch Tiny817 Xplained Pro Selfcap Example in Atmel Start (http://start.atmel.com/#examples). The two kits are identical except the device.

Tip: The touch buttons in the kit are placed on the inner layers of the PCB and have a very small overlay. Due to the short distance from the sensor to the touch area, it might be oversensitive. Different overlays can be used to avoid saturation of the sensor.

Table 4-7. QTouch Connection

ATtiny3217 Pin	Silkscreen Text	Shared Functionality
PA7	QT BTN1	EXT1
PA6	QT BTN2	EXT1

4.4 Embedded Debugger Implementation

The ATtiny3217 Xplained Pro contains an Embedded Debugger (EDBG), which can be used to program and debug the ATtiny3217 using Unified Program Debug Interface (UPDI). The Embedded Debugger also includes a Virtual COM Port interface over UART, a Data Gateway Interface over SPI, I^2C, and two ATtiny3217 GPIOs. The kit also includes an XAM extension processor to the Embedded Debugger for on-board current measurement. Atmel Studio can be used as a front-end for the Embedded Debugger.

4.4.1 Unified Program Debug Interface

The Unified Program Debug Interface (UPDI) uses one pin to communicate with the target. For further information on how to use the programming and debugging capabilities of the EDBG, see section 3.1 Embedded Debugger.

Table 4-8. UPDI Connections

ATtiny3217 Pin	Function	Shared Functionality
PA0	UPDI interface	UPDI debug connector

4.4.2 Virtual COM Port

The Embedded Debugger acts as a Virtual COM Port gateway by using one of the ATtiny3217 UARTs. For further information on how to use the Virtual COM Port, see section 3.1 Embedded Debugger.

Table 4-9. Virtual COM Port Connections

ATtiny3217 Pin	Function	Shared Functionality
PB2	UART TXD (ATtiny3217 TX line)	EXT1 and EXT3
PB3	UART RXD (ATtiny3217 RX line)	EXT1 and EXT3

4.4.3 Data Gateway Interface

The Embedded Debugger features a Data Gateway Interface (DGI) by using either an SPI or I²C. The DGI can be used to send a variety of data from the ATtiny3217 to the host PC. For further information on how to use the DGI interface, see the Data Visualizer and the EDBG User Guide.

Table 4-10. DGI Interface Connections when using SPI

ATtiny3217 Pin	Function	Shared Functionality
PC4	SPI SS (Slave select) (ATtiny3217 is Master)	-
PC2	*SPI MOSI* (Master Out, Slave in)	EXT1 and EXT3
PC1	*SPI MISO* (Master In, Slave Out)	EXT1 and EXT3
PC0	*SPI SCK* (Clock Out)	EXT1 and EXT3

Table 4-11. DGI Interface Connections when using I²C

ATtiny3217 Pin	Function	Shared Functionality
PA1	*I^2C SDA* (Data line)	EXT1 and EXT3
PA2	*I^2C SCL* (Clock line)	EXT1 and EXT3

Note: Signal functions in *italic* use alternative pin location. These have to be configured in the PORTMUX register of the device.

Two GPIO lines are connected to the Embedded Debugger. The EDBG can monitor these lines and timestamp pin value changes. This makes it possible to accurately timestamp events in the ATtiny3217 application code. For further information on how to configure and use the GPIO monitoring features, see the Data Visualizer and the EDBG User Guide.

Table 4-12. GPIO Lines Connected to the EDBG

ATtiny3217 Pin	Function	Shared Functionality
PB5	GPIO0	EXT3 and SW0
PB6	GPIO1	EXT3

4.4.4 XAM Configuration

On the ATtiny3217 Xplained Pro, the MCU and the MCU peripherals (e.g. extensions) are powered by their own regulator, as shown in the figure below. All the other parts of the board, mainly the embedded debugger and the accompanying Xplained Pro Analog Module (XAM), are powered from a separate regulator. The current to the MCU and the peripherals can be measured by connecting them to the XAM output through jumper settings.

Figure 4-3. ATtiny3217 Xplained Pro XAM Implementation Block Diagram

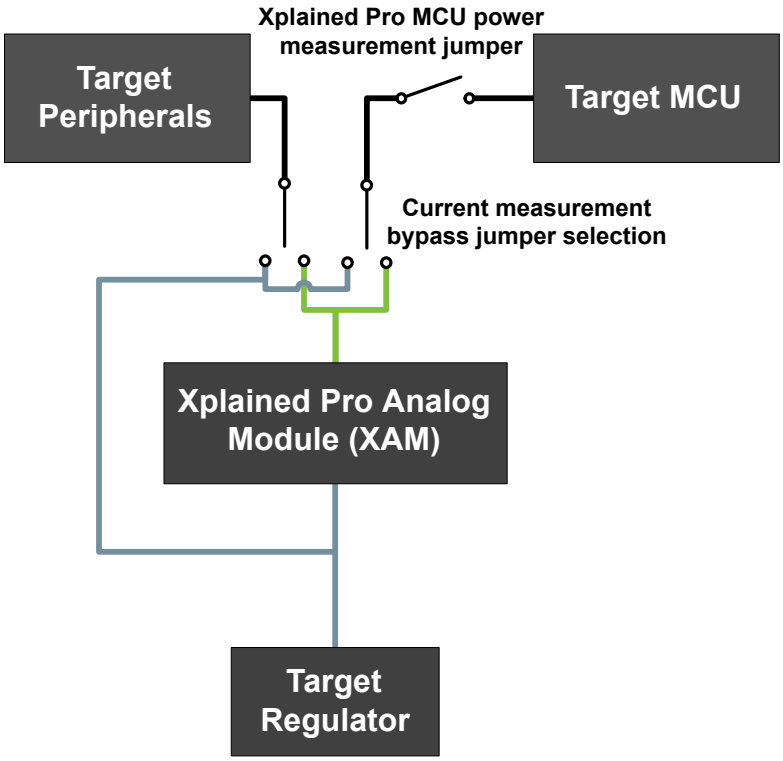

On the ATtiny3217 Xplained Pro the XAM can be used in four configurations:

1. **No current measurement or external MCU current measurement**: The XAM is bypassed and thus the MCU and peripherals are supplied directly by the regulator. Set both jumpers in the "BYPASS" position. In this configuration, it is also possible to connect external measurement tools on the Xplained Pro MCU power measurement header to measure the MCU current directly instead of using the XAM.
2. **MCU current measurement**: The XAM measures only the MCU current while the peripherals are supplied directly by the regulator. For this configuration, place the jumper for "I/O" (peripherals) into the "BYPASS" position and the "MCU" into the "MEASURE" position.

3. **Peripherals measurement**: The XAM measures only the peripherals' current while the MCU is directly supplied by the regulator. For this configuration, place the jumper for "MCU" into the "BYPASS" position and the "I/O" jumper into the "MEASURE" position.
4. **MCU and peripherals measurement**: In this configuration, both the MCU and the peripherals are measured by the XAM. Place both jumpers on the "I/O" and "MCU" headers in the "MEASURE" position.

4.5 Kit Modifications

ATtiny3217 Xplained Pro has several resistors that can be used to disconnect I/O pins of the ATtiny3217 from connectors and on-board ICs and to disconnect power signals.

Info: Note that there are some resistors that aren't mounted by default on the kit listed in the table below.

Table 4-13. Kit Modifications

Designator	Value	Mounted	From	To	Comment
J100	cut-strap	N/A	VCC_P3V3	VCC_P3V3_CM_IN	ATtiny3217, peripherals, and connectors power supply
R107	0R	Yes	U100 OUT	VCC_CM_P3V3	XAM power supply
R108	0R	Yes	U100 OUT	VCC_EDBG_P3V3	EDBG power supply
R302	10k	Yes	QT BTN1	PA6 AIN6	Onboard QTouch buttons to the ATtiny3217
R305	10k	Yes	QT BTN2	PA7 AIN7	
R307	0R	Yes	PB2 UART TXD	PB2	EDBG CDC and UART on extension headers to the ATtiny3217
R308	0R	Yes	PB3 UART RXD	PB3	
R309	0R	Yes	SW1	PC5	Mechanical button SW1
R312	0R	**No**	PB3 TOSC1	PB3	32 KHz crystal to the ATtiny3217
R313	0R	**No**	PB2 TOSC2	PB2	
R404	0R	Yes	EDBG UPDI	PA0 UDPI RST	Debug interface from the EDBG to the ATtiny3217
R406	0R	Yes	EDBG CDC RX	PB2 UART TX	EDBG CDC and DGI interfaces to the ATtiny3217
R407	0R	Yes	EDBG I^2C SDA	PA1 I^2C SDA	
R408	0R	Yes	EDBG I^2C SCL	PA2 I^2C SCL	
R414	330R	Yes	EDBG CDC TX	PB3 UART RX	
R415	0R	Yes	EDBG SPI MOSI	PC2 SPI MOSI	
R416	330R	Yes	EDBG DGI_GPIO0	PB5 GPIO	

Designator	Value	Mounted	From	To	Comment
R417	330R	Yes	EDBG DGI_GPIO1	PB6 IRQ GPIO	
R420	330R	Yes	EDBG SPI MISO	PC1 SPI MISO	
R425	0R	Yes	EDBG SPI SCK	PC0 SPI SCK	
R426	0R	Yes	EDBG SS	PC4 SPI SS	

Figure 4-4. Assembly Drawing Top

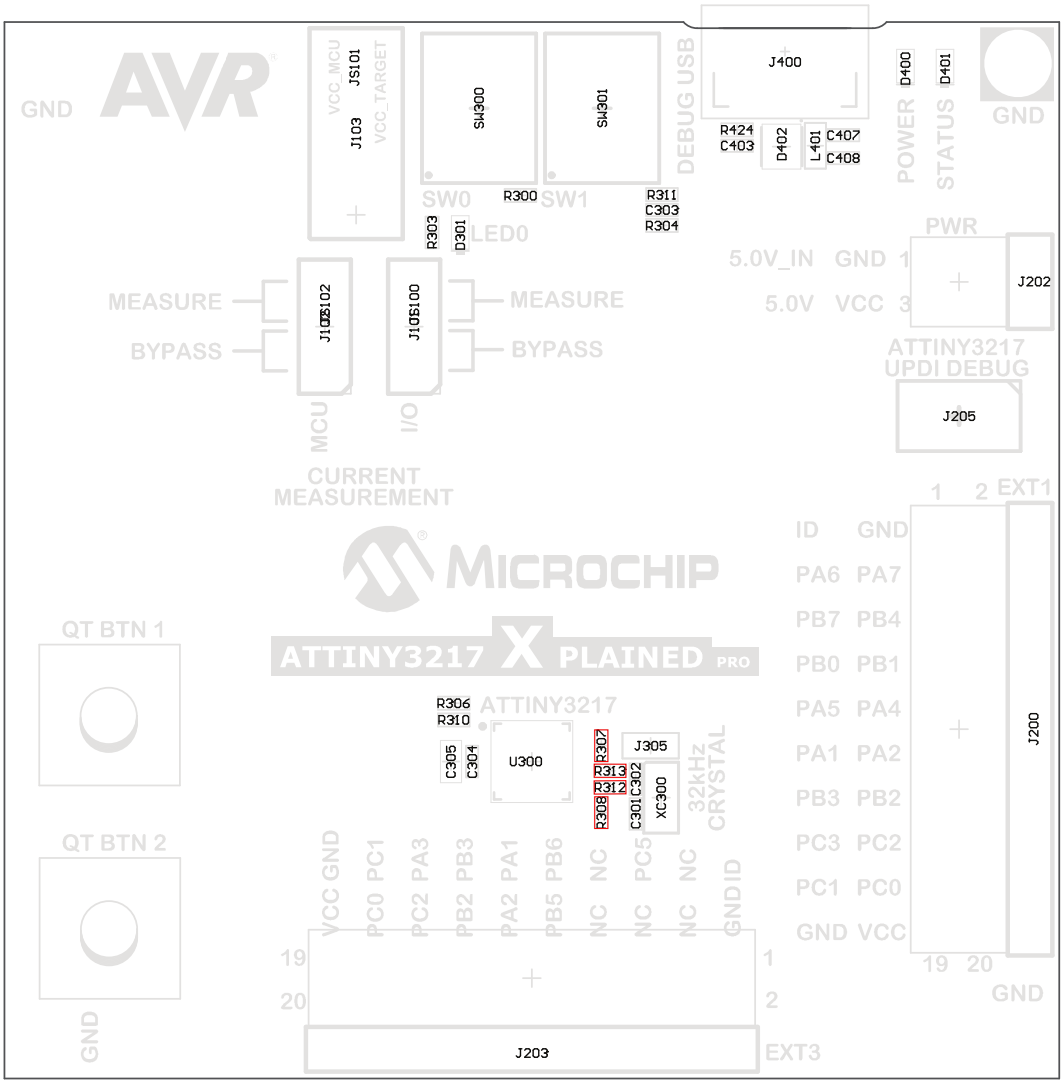

Figure 4-5. Assembly Drawing Bottom

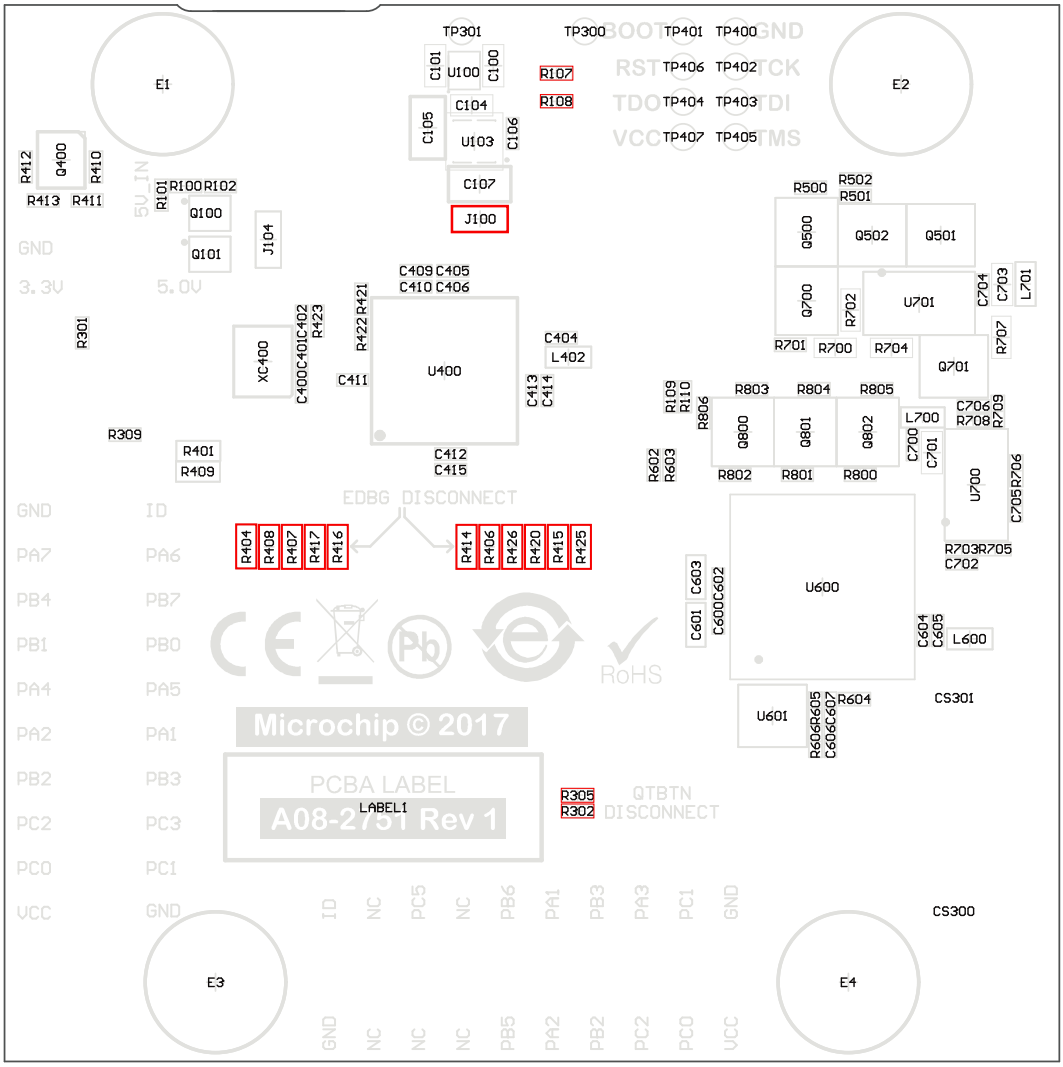

4.5.1 Connecting the 32 KHz Crystal

The ATtiny3217 Xplained Pro board has a 32.768 kHz crystal mounted on the kit. The crystal is not connected by default as the TOSC pins on the device are used for UART communication to the extension headers and the EDBG CDC. To use the crystal, this connection has to be broken in order to get a functional crystal operation.

To connect the crystal, remove resistors R307 and R308 and place them on the footprints for R312 and R313. To locate the components, see the assembly drawing in the section above (*Kit Modifications*).

Info: Operating the ATtiny3217 with the crystal requires physical modifications on the kit using a soldering iron.

4.5.2 Operation at Other Voltages

The ATtiny3217 Xplained Pro board is operated at 3.3V by default, but it can also operate from other voltages from an external supply. The EDBG is designed to run from a 3.3V supply and won't work on other voltages, therefore all connections from the EDBG and the on-board 3.3V regulator to the ATtiny3217 should be removed.

To completely disconnect the EDBG and the on-board power supply from the ATtiny3217, do the following:

- Remove the two jumpers from the on-board 3-pin current measurement headers (J101 and J102), and connect the two center pins (pin 2) together with a wire or an ammeter, as shown in Figure 4-7
- Remove R404, R406, R407, R408, R414, R415, R416, R417, R420, R425, R426
- Optionally, cut J100 to remove power to the on-board current measurement headers (J101 and J102) from the on-board regulator

Figure 4-6 shows all components that have to be removed from the bottom side of the PCB for operation at other voltages. To locate the other components, see the assembly drawing in the section above. The kit can be supplied with a desired voltage through the pins marked 3.3V (pin four) and GND (pin two) on the Xplained Pro power header when the components are removed. To program and debug the ATtiny3217 the 2x5 50mil UPDI debug connector has to be used with an external debugger.

Info: Operating the ATtiny3217 on other voltages than 3.3V requires physical modifications on the kit using a soldering iron and an external debugger for programming the ATtiny3217. The on-board current measurement only works at 3.3V. The on-board LED is selected for 3.3V operation. The light level at 1.8V operation is very low. To increase the emitted light level the value of the series resistor can be lowered. The EDBG functionality can be restored by re-soldering the removed components. If J100 was cut a 0Ω resistor can be soldered across the cut.

CAUTION The voltage supplied through the power header is applied directly to the ATtiny3217 and the extension headers. Applying a voltage higher than 5.5V may damage the board permanently.

Figure 4-6. ATtiny3217 Xplained Pro EDBG Disconnect

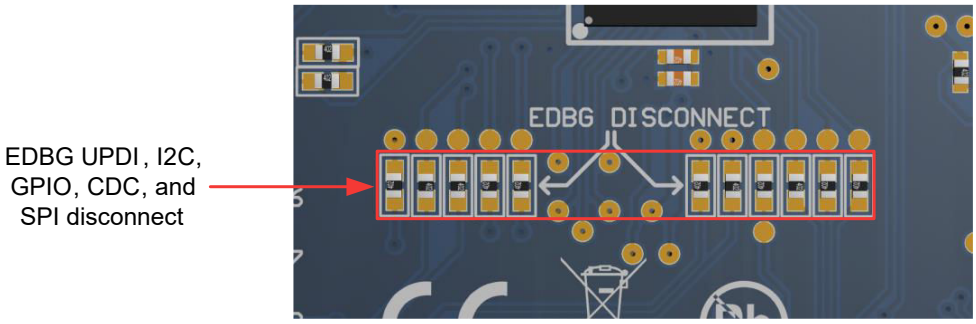

Figure 4-7. ATtiny3217 Xplained Pro Current Measurement Headers

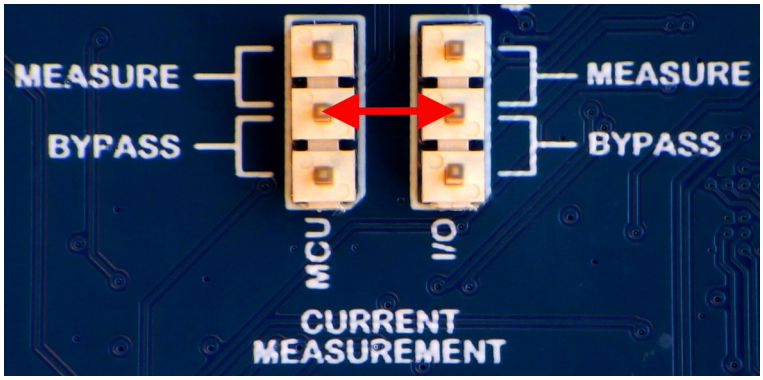

Related Links

3.5.2 Xplained Pro Power Header
4.2 Connectors
4.2.2 UPDI Debug Connector

5. Appendix

5.1 Getting Started with IAR

IAR Embedded Workbench® for AVR® is a proprietary high-efficiency compiler which is not based on GCC. Programming and debugging of Xplained Pro kits are supported in IAR™ Embedded Workbench for AVR using the Atmel-ICE interface. Some initial settings must be set up in the project to get the programming and debugging to work.

The following steps will explain how to get your project ready for programming and debugging:

1. Make sure you have opened the project you want to configure. Open the **OPTIONS** dialog for the project.
2. In the category **General Options**, select the **Target** tab. Select the device for the project, or, if not listed, the core of the device.
3. In the category **Debugger**, select the **Setup** tab. Select **Atmel-ICE** as the driver.
4. In the category **Debugger** > **Atmel-ICE**, select the **Atmel-ICE 1** tab. Select **UPDI** as the interface and optionally select the **UPDI** frequency.

Info: If the selection of Debug Port, mentioned in step 4, is grayed out, the interface is preselected, and the user can skip this configuration step.

Figure 5-1. Select Target Device

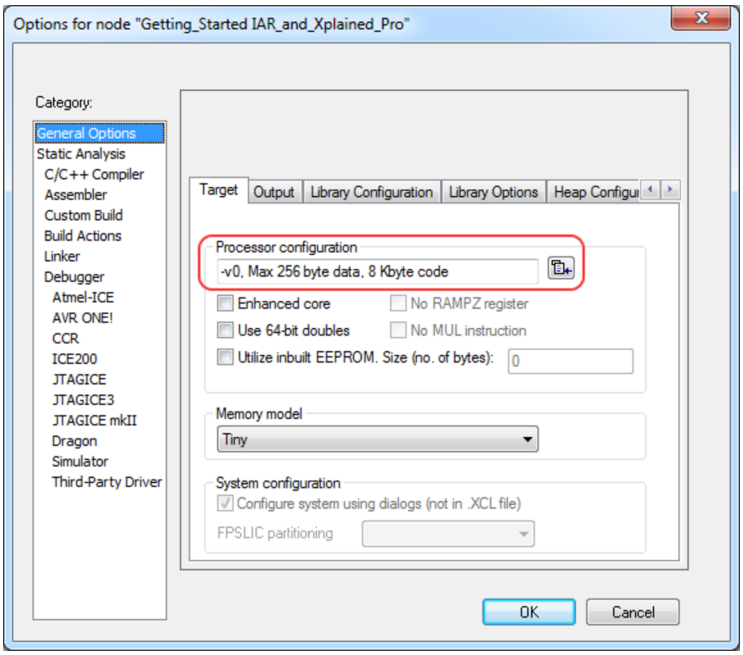

Figure 5-2. Select Debugger

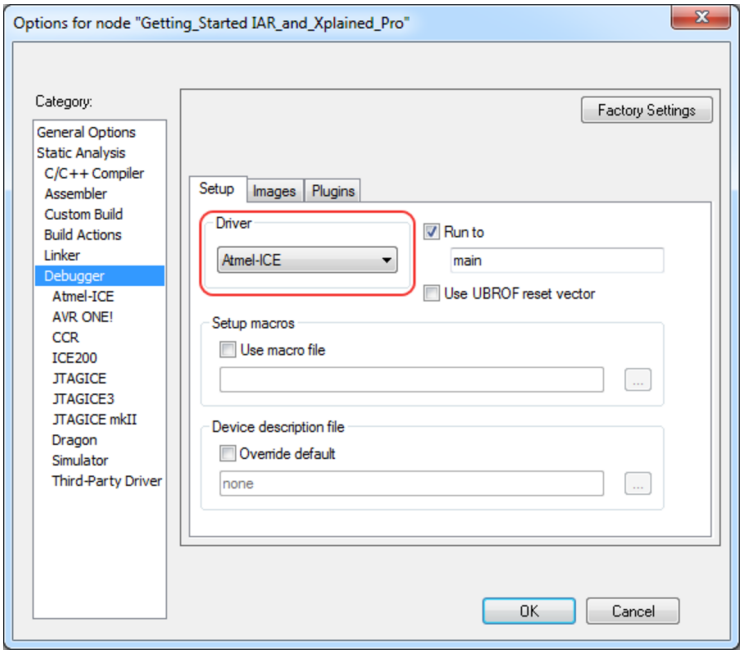

Figure 5-3. Configure Interface

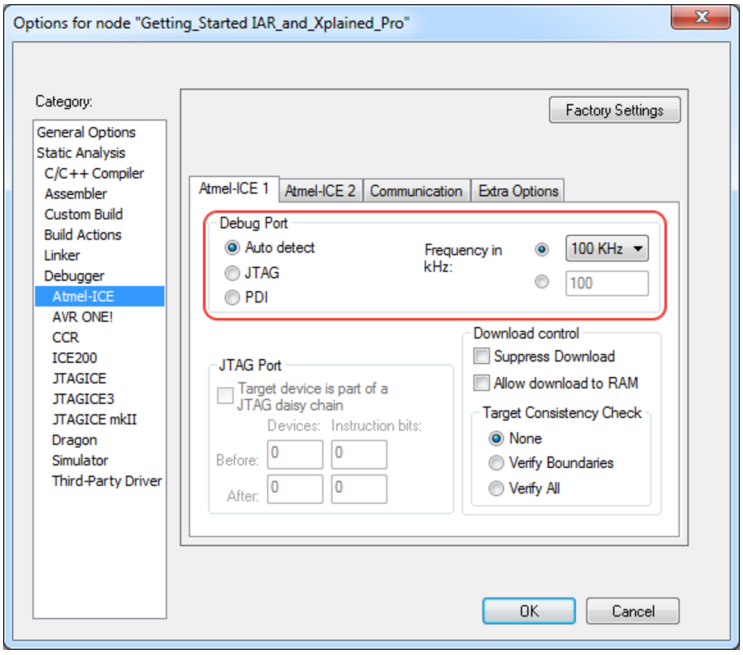

6. Hardware Revision History and Known Issues

This user guide provides the latest available revision of the kit. This chapter contains information about known issues, a revision history of older revisions, and how older revisions differ from the latest revision.

6.1 Identifying Product ID and Revision

The revision and product identifier of the Xplained Pro boards can be found in two ways: either through Atmel Studio or by looking at the sticker on the bottom side of the PCB.

When an Xplained Pro MCU board is connected to a computer with Atmel Studio running, an information window with the serial number is shown. The first six digits of the serial number contain the product identifier and revision. Information about connected Xplained Pro extension boards is also shown in the window.

The same information can be found on the sticker on the bottom side of the PCB. Most kits have stickers that have the identifier and revision printed in plain text as A09-nnnn/rr, where nnnn is the identifier and rr is the revision. Boards with limited space have a sticker with only a data matrix code, which contains a serial number string.

The serial number string has the following format:

```
"nnnnrrsssssssssss"

n = product identifier

r = revision

s = serial number
```

The product identifier for the ATtiny3217 Xplained Pro is A09-2835.

6.2 Revision 1

Revision 1 is the initially released revision.

7. Document Revision History

Doc. rev.	Date	Comment
50002765A	06/2018	Initial document release

The Microchip Web Site

Microchip provides online support via our web site at http://www.microchip.com/. This web site is used as a means to make files and information easily available to customers. Accessible by using your favorite Internet browser, the web site contains the following information:

- **Product Support** – Data sheets and errata, application notes and sample programs, design resources, user's guides and hardware support documents, latest software releases and archived software
- **General Technical Support** – Frequently Asked Questions (FAQ), technical support requests, online discussion groups, Microchip consultant program member listing
- **Business of Microchip** – Product selector and ordering guides, latest Microchip press releases, listing of seminars and events, listings of Microchip sales offices, distributors and factory representatives

Customer Change Notification Service

Microchip's customer notification service helps keep customers current on Microchip products. Subscribers will receive e-mail notification whenever there are changes, updates, revisions or errata related to a specified product family or development tool of interest.

To register, access the Microchip web site at http://www.microchip.com/. Under "Support", click on "Customer Change Notification" and follow the registration instructions.

Customer Support

Users of Microchip products can receive assistance through several channels:

- Distributor or Representative
- Local Sales Office
- Field Application Engineer (FAE)
- Technical Support

Customers should contact their distributor, representative or Field Application Engineer (FAE) for support. Local sales offices are also available to help customers. A listing of sales offices and locations is included in the back of this document.

Technical support is available through the web site at: http://www.microchip.com/support

Microchip Devices Code Protection Feature

Note the following details of the code protection feature on Microchip devices:

- Microchip products meet the specification contained in their particular Microchip Data Sheet.
- Microchip believes that its family of products is one of the most secure families of its kind on the market today, when used in the intended manner and under normal conditions.
- There are dishonest and possibly illegal methods used to breach the code protection feature. All of these methods, to our knowledge, require using the Microchip products in a manner outside the operating specifications contained in Microchip's Data Sheets. Most likely, the person doing so is engaged in theft of intellectual property.
- Microchip is willing to work with the customer who is concerned about the integrity of their code.

- Neither Microchip nor any other semiconductor manufacturer can guarantee the security of their code. Code protection does not mean that we are guaranteeing the product as “unbreakable.”

Code protection is constantly evolving. We at Microchip are committed to continuously improving the code protection features of our products. Attempts to break Microchip’s code protection feature may be a violation of the Digital Millennium Copyright Act. If such acts allow unauthorized access to your software or other copyrighted work, you may have a right to sue for relief under that Act.

Legal Notice

Information contained in this publication regarding device applications and the like is provided only for your convenience and may be superseded by updates. It is your responsibility to ensure that your application meets with your specifications. MICROCHIP MAKES NO REPRESENTATIONS OR WARRANTIES OF ANY KIND WHETHER EXPRESS OR IMPLIED, WRITTEN OR ORAL, STATUTORY OR OTHERWISE, RELATED TO THE INFORMATION, INCLUDING BUT NOT LIMITED TO ITS CONDITION, QUALITY, PERFORMANCE, MERCHANTABILITY OR FITNESS FOR PURPOSE. Microchip disclaims all liability arising from this information and its use. Use of Microchip devices in life support and/or safety applications is entirely at the buyer’s risk, and the buyer agrees to defend, indemnify and hold harmless Microchip from any and all damages, claims, suits, or expenses resulting from such use. No licenses are conveyed, implicitly or otherwise, under any Microchip intellectual property rights unless otherwise stated.

Trademarks

The Microchip name and logo, the Microchip logo, AnyRate, AVR, AVR logo, AVR Freaks, BeaconThings, BitCloud, CryptoMemory, CryptoRF, dsPIC, FlashFlex, flexPWR, Heldo, JukeBlox, KeeLoq, KeeLoq logo, Kleer, LANCheck, LINK MD, maXStylus, maXTouch, MediaLB, megaAVR, MOST, MOST logo, MPLAB, OptoLyzer, PIC, picoPower, PICSTART, PIC32 logo, Prochip Designer, QTouch, RightTouch, SAM-BA, SpyNIC, SST, SST Logo, SuperFlash, tinyAVR, UNI/O, and XMEGA are registered trademarks of Microchip Technology Incorporated in the U.S.A. and other countries.

ClockWorks, The Embedded Control Solutions Company, EtherSynch, Hyper Speed Control, HyperLight Load, IntelliMOS, mTouch, Precision Edge, and Quiet-Wire are registered trademarks of Microchip Technology Incorporated in the U.S.A.

Adjacent Key Suppression, AKS, Analog-for-the-Digital Age, Any Capacitor, AnyIn, AnyOut, BodyCom, chipKIT, chipKIT logo, CodeGuard, CryptoAuthentication, CryptoCompanion, CryptoController, dsPICDEM, dsPICDEM.net, Dynamic Average Matching, DAM, ECAN, EtherGREEN, In-Circuit Serial Programming, ICSP, Inter-Chip Connectivity, JitterBlocker, KleerNet, KleerNet logo, Mindi, MiWi, motorBench, MPASM, MPF, MPLAB Certified logo, MPLIB, MPLINK, MultiTRAK, NetDetach, Omniscient Code Generation, PICDEM, PICDEM.net, PICkit, PICtail, PureSilicon, QMatrix, RightTouch logo, REAL ICE, Ripple Blocker, SAM-ICE, Serial Quad I/O, SMART-I.S., SQI, SuperSwitcher, SuperSwitcher II, Total Endurance, TSHARC, USBCheck, VariSense, ViewSpan, WiperLock, Wireless DNA, and ZENA are trademarks of Microchip Technology Incorporated in the U.S.A. and other countries.

SQTP is a service mark of Microchip Technology Incorporated in the U.S.A.

Silicon Storage Technology is a registered trademark of Microchip Technology Inc. in other countries.

GestIC is a registered trademark of Microchip Technology Germany II GmbH & Co. KG, a subsidiary of Microchip Technology Inc., in other countries.

All other trademarks mentioned herein are property of their respective companies.

© 2018, Microchip Technology Incorporated, Printed in the U.S.A., All Rights Reserved.

ISBN: 978-1-5224-3164-0

Quality Management System Certified by DNV

ISO/TS 16949

Microchip received ISO/TS-16949:2009 certification for its worldwide headquarters, design and wafer fabrication facilities in Chandler and Tempe, Arizona; Gresham, Oregon and design centers in California and India. The Company's quality system processes and procedures are for its PIC® MCUs and dsPIC® DSCs, KEELOQ® code hopping devices, Serial EEPROMs, microperipherals, nonvolatile memory and analog products. In addition, Microchip's quality system for the design and manufacture of development systems is ISO 9001:2000 certified.

Worldwide Sales and Service

AMERICAS	ASIA/PACIFIC	ASIA/PACIFIC	EUROPE
Corporate Office 2355 West Chandler Blvd. Chandler, AZ 85224-6199 Tel: 480-792-7200 Fax: 480-792-7277 Technical Support: http://www.microchip.com/support Web Address: www.microchip.com **Atlanta** Duluth, GA Tel: 678-957-9614 Fax: 678-957-1455 **Austin, TX** Tel: 512-257-3370 **Boston** Westborough, MA Tel: 774-760-0087 Fax: 774-760-0088 **Chicago** Itasca, IL Tel: 630-285-0071 Fax: 630-285-0075 **Dallas** Addison, TX Tel: 972-818-7423 Fax: 972-818-2924 **Detroit** Novi, MI Tel: 248-848-4000 **Houston, TX** Tel: 281-894-5983 **Indianapolis** Noblesville, IN Tel: 317-773-8323 Fax: 317-773-5453 Tel: 317-536-2380 **Los Angeles** Mission Viejo, CA Tel: 949-462-9523 Fax: 949-462-9608 Tel: 951-273-7800 **Raleigh, NC** Tel: 919-844-7510 **New York, NY** Tel: 631-435-6000 **San Jose, CA** Tel: 408-735-9110 Tel: 408-436-4270 **Canada - Toronto** Tel: 905-695-1980 Fax: 905-695-2078	**Australia - Sydney** Tel: 61-2-9868-6733 **China - Beijing** Tel: 86-10-8569-7000 **China - Chengdu** Tel: 86-28-8665-5511 **China - Chongqing** Tel: 86-23-8980-9588 **China - Dongguan** Tel: 86-769-8702-9880 **China - Guangzhou** Tel: 86-20-8755-8029 **China - Hangzhou** Tel: 86-571-8792-8115 **China - Hong Kong SAR** Tel: 852-2943-5100 **China - Nanjing** Tel: 86-25-8473-2460 **China - Qingdao** Tel: 86-532-8502-7355 **China - Shanghai** Tel: 86-21-3326-8000 **China - Shenyang** Tel: 86-24-2334-2829 **China - Shenzhen** Tel: 86-755-8864-2200 **China - Suzhou** Tel: 86-186-6233-1526 **China - Wuhan** Tel: 86-27-5980-5300 **China - Xian** Tel: 86-29-8833-7252 **China - Xiamen** Tel: 86-592-2388138 **China - Zhuhai** Tel: 86-756-3210040	**India - Bangalore** Tel: 91-80-3090-4444 **India - New Delhi** Tel: 91-11-4160-8631 **India - Pune** Tel: 91-20-4121-0141 **Japan - Osaka** Tel: 81-6-6152-7160 **Japan - Tokyo** Tel: 81-3-6880- 3770 **Korea - Daegu** Tel: 82-53-744-4301 **Korea - Seoul** Tel: 82-2-554-7200 **Malaysia - Kuala Lumpur** Tel: 60-3-7651-7906 **Malaysia - Penang** Tel: 60-4-227-8870 **Philippines - Manila** Tel: 63-2-634-9065 **Singapore** Tel: 65-6334-8870 **Taiwan - Hsin Chu** Tel: 886-3-577-8366 **Taiwan - Kaohsiung** Tel: 886-7-213-7830 **Taiwan - Taipei** Tel: 886-2-2508-8600 **Thailand - Bangkok** Tel: 66-2-694-1351 **Vietnam - Ho Chi Minh** Tel: 84-28-5448-2100	**Austria - Wels** Tel: 43-7242-2244-39 Fax: 43-7242-2244-393 **Denmark - Copenhagen** Tel: 45-4450-2828 Fax: 45-4485-2829 **Finland - Espoo** Tel: 358-9-4520-820 **France - Paris** Tel: 33-1-69-53-63-20 Fax: 33-1-69-30-90-79 **Germany - Garching** Tel: 49-8931-9700 **Germany - Haan** Tel: 49-2129-3766400 **Germany - Heilbronn** Tel: 49-7131-67-3636 **Germany - Karlsruhe** Tel: 49-721-625370 **Germany - Munich** Tel: 49-89-627-144-0 Fax: 49-89-627-144-44 **Germany - Rosenheim** Tel: 49-8031-354-560 **Israel - Ra'anana** Tel: 972-9-744-7705 **Italy - Milan** Tel: 39-0331-742611 Fax: 39-0331-466781 **Italy - Padova** Tel: 39-049-7625286 **Netherlands - Drunen** Tel: 31-416-690399 Fax: 31-416-690340 **Norway - Trondheim** Tel: 47-7289-7561 **Poland - Warsaw** Tel: 48-22-3325737 **Romania - Bucharest** Tel: 40-21-407-87-50 **Spain - Madrid** Tel: 34-91-708-08-90 Fax: 34-91-708-08-91 **Sweden - Gothenberg** Tel: 46-31-704-60-40 **Sweden - Stockholm** Tel: 46-8-5090-4654 **UK - Wokingham** Tel: 44-118-921-5800 Fax: 44-118-921-5820