TPS40140 Dual or 2-Phase, Stackable Controller

1 Features

- VDD from 4.5 to 15 V, With Internal 5-V Regulator
- V_{OUT} from 0.7 V to 5.8 V
- Converts from 15-V Input to 0.7-V Output at 1 MHz
- Dual-Output or 2-Phase Interleaved Operation, Stackable to 16 Phases
- Supports Prebiased Outputs
  Programmable Switching Frequency up to 1 MHz/Phase
- 0.5% Internally Trimmed 0.7-V Reference
- 10-µA Shutdown Current
- Current Mode Control With Forced Current Sharing (1)
- 1- to 40-V Power Stage Operation Range
- Power Sharing From Different Input Voltage Rails, (for Example, Master From 5 V, Slave From 12 V)
- True Remote Sensing Differential Amplifier
- Programmable Input Undervoltage Lockout (UVLO)
- Resistive or Inductor DCR Current Sensing
- Provide a 6-Bit Digitally Controlled Output When Used With TPS40120
- 36-Pin VQFN Package

(1) Patents Pending

2 Applications

- Graphic Cards
- Internet Servers
- Networking Equipment
- Telecommunications Equipment
- DC Power Distributed Systems

3 Description

The TPS40140 is a multifunctional synchronous buck controller that can be configured to provide either a single-output 2-phase power supply or a power supply that supports two independent outputs. Several TPS40140 controllers can be stacked up to a 16-phase single output power supply. Alternatively, several controllers providing multiple independent outputs can be synchronized in an interleaving pattern for improved input ripple current.

The TPS40140 can convert from a 15-V input to a 0.7-V output at 1 MHz.

Each phase operates at a switching frequency of up to 1 MHz. The two phases in one device operate 180° out-of-phase. In a multiple-device stackable configuration, the phase shift of the slaves, relative to a master, is programmable.

Device Information(1)

PART NUMBER	PACKAGE	BODY SIZE (NOM)
TPS40140	VQFN (36)	6.00 mm × 6.00 mm

(1) For all available packages, see the orderable addendum at the end of the data sheet.

Simplified Schematic

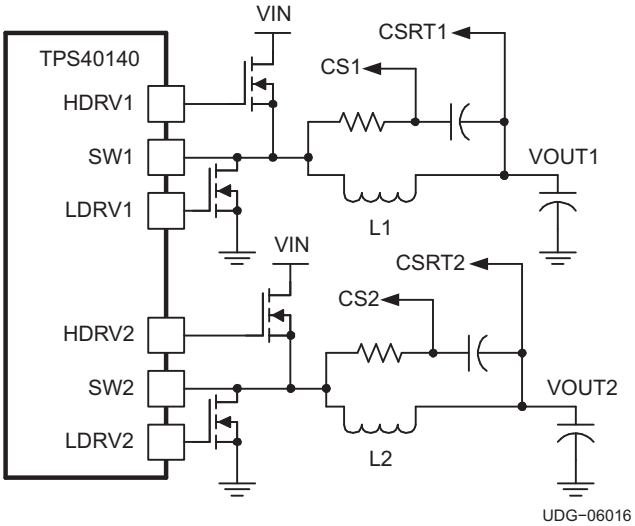

An IMPORTANT NOTICE at the end of this data sheet addresses availability, warranty, changes, use in safety-critical applications, intellectual property matters and other important disclaimers. PRODUCTION DATA.

Table of Contents

1 Features ... 1
2 Applications ... 1
3 Description ... 1
4 Revision History ... 2
5 Device Comparison Table ... 3
6 Pin Configuration and Functions ... 3
7 Specifications ... 5
7.1 Absolute Maximum Ratings ... 5
7.2 ESD Ratings ... 5
7.3 Recommended Operating Conditions ... 5
7.4 Thermal Information ... 6
7.5 Electrical Characteristics ... 6
7.6 Typical Characteristics ... 9
8 Detailed Description ... 12
8.1 Overview ... 12
8.2 Functional Block Diagram ... 13
8.3 Feature Description ... 13
8.4 Device Functional Modes ... 15
9 Application and Implementation ... 16
9.1 Application Information ... 16
9.2 Typical Application ... 40
9.3 System Example ... 55
10 Power Supply Recommendations ... 60
11 Layout ... 60
11.1 Layout Guidelines ... 60
11.2 Layout Example ... 61
12 Device and Documentation Support ... 62
12.1 Device Support ... 62
12.2 Documentation Support ... 63
12.3 Trademarks ... 63
12.4 Electrostatic Discharge Caution ... 63
12.5 Glossary ... 63
13 Mechanical, Packaging, and Orderable Information ... 63

4 Revision History

NOTE: Page numbers for previous revisions may differ from page numbers in the current version.

Changes from Revision H (June 2013) to Revision I	Page
• Added *ESD Ratings* table, *ESD Ratings* table *Feature Description* section, *Device Functional Modes*, *Application and Implementation* section, *Power Supply Recommendations* section, *Layout* section, *Device and Documentation Support* section, and *Mechanical, Packaging, and Orderable Information* section	1
• Added R_1 to resistor in Figure 33	33

Changes from Revision G (July 2013) to Revision H	Page
• Changed max Operating junction temperature from 125 to 150 in *Absolute Maximum Ratings*	5
• Changed switching frequency equation in *Setting the Switching Frequency* to match updated measurement.	34
• Changed *Phase Frequency vs Timing Resistor* curve in *Setting the Switching Frequency* to match updated measurement.	34

Changes from Revision F (September 2009) to Revision G	Page
• Updated *Thermal Information* table	6
• Added clarity to *Functional Block Diagram*	13
• Added clarity to Figure 24	26
• Added clarity to Figure 25	27

Copyright © 2005–2015, Texas Instruments Incorporated

5 Device Comparison Table

DEVICE	DESCRIPTION
TPS40130	2-phase synchronous buck controller with integrated MOSFET drivers
TPS40090	4-channel multi-phase DC-DC controller with tri-state
TPS40120	Feedback divider, digitally controlled

6 Pin Configuration and Functions

RHH PACKAGE
VQFN 36-PINS
(TOP VIEW)

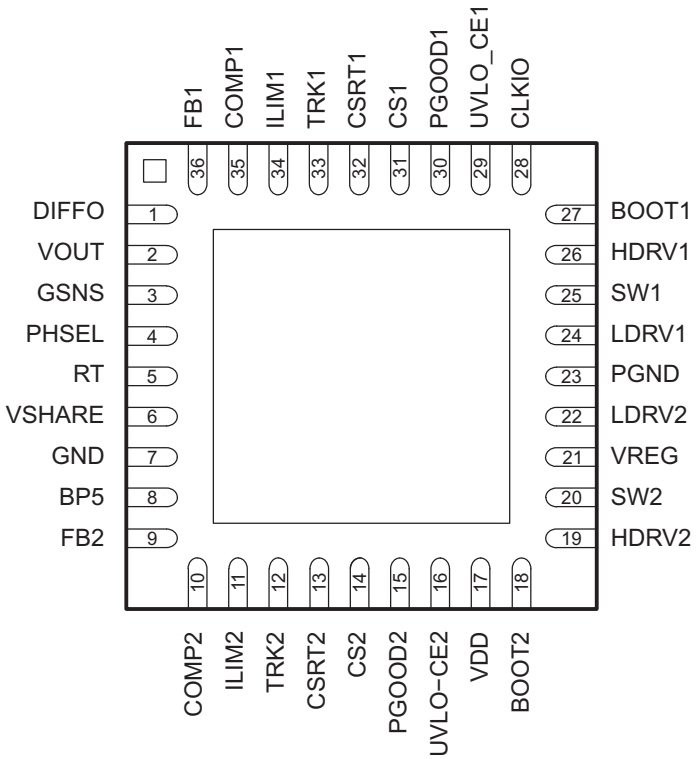

The thermal pad is an electrical ground connection.

Pin Functions

PIN(1)		I/O	DESCRIPTION
NAME	NO.		
BOOT1	27	I	BOOT1 provides a bootstrapped supply for the high side FET driver for PWM1, enabling the gate of the high side FET to be driven above the input supply rail. Connect a capacitor from BOOT1 to SW1 pin and a Schottky diode from this pin to VREG.
BOOT2	18	I	BOOT2 provides a bootstrapped supply for the high side FET driver for PWM2, enabling the gate of the high side FET to be driven above the input supply rail. Connect a capacitor from BOOT2 to SW2 pin and a Schottky diode from this pin to VREG.
BP5	8	I	Filtered input from the VREG pin. A 10-Ω resistor should be connected between VREG and BP5 and a 1.0-μF ceramic capacitor should be connected from BP5 to ground.
CLKIO	28	O	Digital clock signal for synchronizing slave controllers to the master CLKIO frequency and is either 6 or 8 times the PWM switching frequency.
COMP1	35	O	Output of the error amplifier, CH1. The voltage at this pin determines the duty cycle for the PWM1.

(1) It is often necessary to refer to a pin or pins that are used in CH1 and/or CH2. The shortcut nomenclature used is the pin name with a lower case 'x' to mean either or both channels. For example, TRKx refers to TRK1 and/or TRK2.

Copyright © 2005–2015, Texas Instruments Incorporated

Pin Functions (continued)

PIN(1)		I/O	DESCRIPTION
NAME	NO.		
COMP2	10	O	Output of the error amplifier, CH2. The voltage at this pin determines the duty cycle for the PWM2.
CS1	31	I	These pins are used to sense the CH1 phase current. Inductor current can be sensed with an external current sense resistor or by using an external R-C circuit and the inductor's DC resistance. The traces for these signals must be connected directly at the current sense element.
CS2	14	I	These pins are used to sense the CH2 phase current. Inductor current can be sensed with an external current sense resistor or by using an external R-C circuit and the inductor's DC resistance. The traces for these signals must be connected directly at the current sense element.
DIFFO	1	O	Output of the differential amplifier. The output voltage of the differential amplifier is limited to 5.8 V. For remote sensing, the voltage at this pin represents the true output voltage without I × R drops that result from high current in the PCB traces. The VOUT and GSNS pins must be connected directly at the point of load where regulation is required. See *Layout Guidelines* for more information.
CSRT1	32	I	Return point of CH1 current sense voltage. The trace for this signal must be connected directly at the current sense element.
CSRT2	13	I	Return point of CH1 current sense voltage. The trace for this signal must be connected directly at the current sense element.
FB1	36	I	Inverting input of the error amplifier for CH1. In closed loop operation, the voltage at this pin is nominally 700 mV. This pin is also monitored for PGOOD1 and undervoltage on CH1.
FB2	9	I	Inverting input of the error amplifier for CH2. In closed loop operation, the voltage at this pin is nominally 700 mV. This pin is also monitored for PGOOD2 and undervoltage on CH2.
GND	7	—	Low noise ground connection to the device.
GSNS	3	I	Inverting input of the differential amplifier. This pin should be connected to ground at the load. If the differential amplifier is not used, tie this pin to GND or leave open.
HDRV1	26	O	Gate drive output for the high-side N-channel MOSFET switch for CH1. Output is referenced to SW1 and is bootstrapped for enhancement of the high side switch.
HRDV2	19	O	Gate drive output for the high-side N-channel MOSFET switch for CH2. Output is referenced to SW2 and is bootstrapped for enhancement of the high side switch.
ILIM1	34	I	Used to set the cycle-by-cycle current limit threshold for CH1. If the ILIM1 threshold is reached, the PWM pulse is terminated and the converter delivers limited current to the output.
ILIM2	11	I	Used to set the cycle-by-cycle current limit threshold for CH2. If the ILIM2 threshold is reached, the PWM pulse is terminated and the converter delivers limited current to the output.
LRDV1	24	O	Gate drive output for the low-side synchronous rectifier (SR) N-channel MOSFET for CH1.
LRDV2	22	O	Gate drive output for the low-side synchronous rectifier (SR) N-channel MOSFET for CH2.
PGOOD1	30	O	Power good indicators for CH1 output voltage. This open-drain output connects to a voltage via an external resistor
PGOOD2	15	O	Power good indicators for CH2 output voltage. This open-drain output connects to a voltage via an external resistor
PGND	23	—	Power ground reference for the controller lower gate drivers. There should be a high current return path from the sources of the lower MOSFETs to this pin.
PHSEL	4	O	A 20μA current flows from this pin. In a single controller design, this pin should be grounded. In a multi controller configuration, a 39- kΩ resistor string sets the voltage on this pin determines the proper phasing for the slaves. See the section on *Clock Master, PHSEL, and CLKIO Configurations*.
RT	5	I	Connecting a resistor from this pin to ground sets the oscillator frequency.
SW1	25	I	Connect to the switched node on converter CH1. It is the return for the CH 1 upper gate driver. There should be a high current return path from the source of the upper MOSFET to this pin. This pin is also used by the adaptive gate drive circuits to minimize the dead time between upper and lower MOSFET conduction.
SW2	20	I	Connect to the switched node on converter CH2. It is the return for the CH 2 upper gate driver. There should be a high current return path from the source of the upper MOSFET to this pin. This pin is also used by the adaptive gate drive circuits to minimize the dead time between upper and lower MOSFET conduction.
TRK1	33	I	This is an input to the non-inverting input of the error amplifier CH1. This pin is normally connected to the soft-start capacitor or to another voltage that is tracked.
TRK2	12	I	This is an input to the non-inverting input of the error amplifier CH2. This pin is normally connected to the soft-start capacitor or to another voltage that is tracked.
UVLO_CE1	29	I	A voltage divider from V_{IN} to this pin determines the input voltage that CH1 starts. When the voltage is between 0.5 and 1.5 V the VREG regulator is enabled . When the voltage is 2.1 V or above CH1 soft start is allowed to begin.

Copyright © 2005–2015, Texas Instruments Incorporated

Pin Functions (continued)

PIN(1)		I/O	DESCRIPTION
NAME	NO.		
UVLO_CE2	16	I	A voltage divider from V_{IN} to this pin determines the input voltage that CH2 starts. When the voltage is between 0.5 and 1.5 V the VREG regulator is enabled . When the voltage is 2.1 V or above CH2 soft start is allowed to begin.
VDD	17	I	Power input for the controller 5V regulator and differential amplifier. A 1.0-µF ceramic capacitor should be connected from this pin to ground.
VOUT	2	I	Non-inverting input of the differential amplifier. This pin should be connected to the output of the converter close to the load point. If the differential amplifier is not used, leave this pin open.
VREG	21	O	The output of the internal 5-V regulator. A 4.7-µF ceramic capacitor should be connected from this pin to PGND.
VSHARE	6	O	The 1.8-V reference output

7 Specifications

7.1 Absolute Maximum Ratings

over operating free-air temperature range (unless otherwise noted)

		MIN	MAX	UNIT
Input voltage	VDD, UVLO ≤ VDD, RT, SS	–0.3	16	V
	SW1, SW2	–1	44	
	SW1, SW2, transient < 50 ns		–5	
	BOOT1, BOOT2, HDRV1, HDRV2		V_{SW} + 6.0	
	All other pins	–0.3	6.0	
Output current	RT		200	µA
T_J	Operating junction temperature	–40	150	°C
T_{stg}	Storage temperature	–55	150	°C

7.2 ESD Ratings

		VALUE	UNIT
$V_{(ESD)}$ Electrostatic discharge	Human body model (HBM), per ANSI/ESDA/JEDEC JS-001(1)	3000	V
	Charged-device model (CDM), per JEDEC specification JESD22-C101(2)	1500	

(1) JEDEC document JEP155 states that 500-V HBM allows safe manufacturing with a standard ESD control process.
(2) JEDEC document JEP157 states that 250-V CDM allows safe manufacturing with a standard ESD control process.

7.3 Recommended Operating Conditions

over operating free-air temperature range (unless otherwise noted)

		MIN	NOM	MAX	UNIT
Input voltage	VDD, UVLO ≤ VDD	–0.3		15	V
	SW1, SW2	–1		40	
	BOOT1, BOOT2, HDRV1, HDRV2		V_{SW} + 5.5		
	All other pins	–0.3		5.5	
Maximum output current	RT		25		µA
Operating free-air temperature		–40		85	°C

7.4 Thermal Information

THERMAL METRIC[1]		TPS40140 RHH (VQFN) 36 PINS	UNIT
$R_{\theta JA}$	Junction-to-ambient thermal resistance	30.8	°C/W
$R_{\theta JC(top)}$	Junction-to-case (top) thermal resistance	18.4	
$R_{\theta JB}$	Junction-to-board thermal resistance	5.9	
ψ_{JT}	Junction-to-top characterization parameter	0.2	
ψ_{JB}	Junction-to-board characterization parameter	5.9	
$R_{\theta JC(bot)}$	Junction-to-case (bottom) thermal resistance	0.7	

(1) For more information about traditional and new thermal metrics, see the *IC Package Thermal Metrics* application report, SPRA953.

7.5 Electrical Characteristics

–40°C ≤ T_J ≤ 85°C, (unless otherwise noted), V_{VDD} = 7 V, V_{BP5} = 5 V, UVLO_CE1, UCLO_CE2: 10 kΩ, Pullup to BP5, f_{SW} = 300 kHz, unless otherwise noted

PARAMETER		TEST CONDITIONS	MIN	TYP	MAX	UNIT
VDD INPUT SUPPLY						
	Operating voltage range		4.5	12	15	V
	Shutdown current	UVLO_CE1 = UVLO_CE2 = GND		1	10	µA
BP5 INPUT SUPPLY						
	Operating voltage range		4.5	5.0	5.5	V
	BP5 operating current		2	3	5	mA
	Rising BP5 turnon		4.0	4.25	4.45	V
	BP5 turnoff hysteresis		100	220	400	mV
	Standby mode current[1]	UVLO_CEx = 1.7 V		2.8		mA
VREG						
		7 V < V_{DD} < 15 V	4.5	5.1	5.5	V
		Output current	0		100	mA
OSCILLATOR, RT						
	Phase frequency accuracy	R_{RT}= 110 kΩ		300		kHz
	Phase frequency set range		150		1000	kHz
	RT[1]	25 kΩ ≤ R_{RT} ≤ 500 kΩ		0.7		V
UNDERVOLTAGE LOCKOUT (UVLO_CE1, UVLO_CE2)						
	Enable threshold, standby mode	Internal 5VREG regulator enabled	0.5	1.0	1.5	V
	UVLO threshold	PWM Switching enabled	1.9	2	2.1	V
	UVLO hysteresis	At the UVLO_CEx pin		40		mV
	UVLO_CE1, UVLO_CE2 bias current[1]				1	µA
PWM						
D_{MAX}	Maximum duty cycle per channel[1]	2-phase, 4-phase, 8-phase, or 16-phase		87.5%		
		3-phase, 6-phase, or 12-phase		83.3%		
$t_{ON(min)}$	Minimum controllable pulse width				70	ns
PWM COMPARATOR						
	Input offset voltage		–3		3	mV
VSHARE						
		I_{VSHR} = 0	1.785	1.8	1.815	V
	See[1]	–30 µA < i_{VSHR} < 50 µA	1.785	1.8	1.815	V

(1) Specified by design. Not production tested.

Copyright © 2005–2015, Texas Instruments Incorporated

Electrical Characteristics (continued)

–40°C ≤ T_J ≤ 85°C, (unless otherwise noted), V_{VDD} = 7 V, V_{BP5} = 5 V, UVLO_CE1, UCLO_CE2: 10 kΩ, Pullup to BP5, f_{SW} = 300 kHz, unless otherwise noted

PARAMETER		TEST CONDITIONS	MIN	TYP	MAX	UNIT
ERROR AMPLIFIER CH1, ERROR AMPLIFIER CH2						
	Input common mode range(1)		0	0.7	2.0	V
	Input bias current(1)	V_{FB} = 0.7 V		10		nA
	FBx voltage(1)		0.6965	0.700	0.7035	V
	Output source current	V_{COMP} = 1.1 V, V_{FB} = 0.6 V	1	2		mA
	Output sink current	V_{COMP} = 1.1 V, V_{FB} = BP5	1	2		mA
	BW(1)		8	12		MHz
	Open loop gain(1)		60	90		dB
VOLTAGE TRACKING (TRK1, TRK2)						
	SS source current	After EN, before PWM and during hiccup mode	5	6.0	7.3	µA
		After first PWM pulse	10	12.5	15	
	Fault enable threshold(1)			1.4		V
	Internal clamp voltage(1)			2.4		V
	SS sink resistance(1)	Pulldown resistance			1	kΩ
CURRENT SENSE AMPLIFIERS (CS1, CS2)						
	Differential input voltage		–60		60	mV
	Input offset voltage	CS1, CS2, trimmed	–2.0	0	2.0	mV
Ac	Gain transfer to PWM COMP	5 mV < V_{CS} < 60 mV, V_{CSRT} = 1.5 V	12	13	14	V/V
	Input common mode(1)		0		5.8	V
CSA	Input bias current			100		nA
DIFFERENTIAL AMPLIFIER (DIFFO)						
	Gain	1.0 V < V_{OUT} < 5.8 V	0.997	1	1.003	V/V
	Input common mode range(1)		0		5.8	V
	Output source current(1)	V_{OUT} – V_{VGSNS} = 2 V, V_{DIFFO} > 1.98 V, VDD-V_{OUT} > 2 V			2	mA
	Output source current(1)	V_{OUT} – V_{VGSNS} = 2 V, V_{DIFFO} > 2.02 V VDD – V_{OUT} = 1 V			1	
	Output sink current(1)	V_{OUT} – V_{VGSNS} = 2 V, V_{DIFFO} > 2.02 V			2	
	Unity gain bandwidth(1)		5	8		MHz
	Input Impedance, non inverting(1)	V_{OUT} to GND		60		kΩ
	Input Impedance, inverting(1)	GSNS to DIFFO		60		
GATE DRIVERS						
	HDRV1, HDRV2 source on-resistance	V_{BOOT1}, V_{BOOT2} = 5 V, V_{SW1} = V_{SW2} = 0 V, Sourcing 100 mA	1	2	3	Ω
	HDRV1, HDRV2 sink on-resistance	V_{VREG} = 5 V, V_{SW1} = V_{SW2} = 0 V, Sinking 100 mA	0.5	1.2	2	
	LDRV1, LDRV2 source on-resistance	V_{VREG} = 5 V, V_{SW1} = V_{SW2} = 0 V, Sourcing 100 mA	1	2	3	
	LDRV1, LDRV2 sink on-resistance	V_{VREG} = 5 V, V_{SW1} = V_{SW2} = 0 V, Sinking 100 mA	0.3	0.65	1	
t_{RISE}	HDRVx rise time(1)	C_{LOAD}= 3.3 nF		25	75	ns
t_{FALL}	HDRVx fall time(1)	C_{LOAD}= 3.3 nF		25	75	
t_{RISE}	LDRVx rise time(1)	C_{LOAD}= 3.3 nF		25	75	
t_{FALL}	LDRVx fall time(1)	C_{LOAD}= 3.3 nF		20	60	
	Minimum controllable on-time	C_{LOAD}= 3.3 nF		50		

Copyright © 2005–2015, Texas Instruments Incorporated

Electrical Characteristics (continued)

–40°C ≤ T_J ≤ 85°C, (unless otherwise noted), V_{VDD} = 7 V, V_{BP5} = 5 V, UVLO_CE1, UCLO_CE2: 10 kΩ, Pullup to BP5, f_{SW} = 300 kHz, unless otherwise noted

PARAMETER		TEST CONDITIONS	MIN	TYP	MAX	UNIT
OUTPUT UNDERVOLTAGE FAULT						
		V_{FB} relative to V_{REF}	–19%	–16.5%	–14%	
	Undervoltage delay(1)			3		µs
CURRENT LIMIT						
I_{ILIM}	Output current		18.8	20	21.2	µA
POWER GOOD						
	PGOOD transition low threshold	V_{FB} rising relative to V_{REF}	10%	12.5%	15%	
	PGOOD transition low threshold	V_{FB} falling relative to V_{REF}	–15%	–12.5%	–10%	
	PGOOD trip hysteresis		2%		5%	
	PGOOD delay(1)			10		µs
	Low level output voltage, VOL	I_{PGOOD} = 4 mA		0.35	0.4	V
	PGOOD bias current	V_{PGOOD}= 5.0 V	–2	1	2	µA
RAMP						
	Ramp amplitude(1)		0.421	0.5	0.526	V
VIN BALANCE						
	V_{IN} balance gain, A_{VB}		0.23	0.25	0.27	V/V
THERMAL SHUTDOWN						
	Shutdown temperature(1)		155			°C
	Hysteresis(1)			30		
DIGITAL CLOCK SIGNAL (CLKIO)						
	Pullup resistance(1)	I_{OH} = 5 mA		27		Ω
	Pulldown resistance(1)	I_{OL} = 10 mA		27		Ω
	Output leakage(1)	Tri-state			1	µA

Copyright © 2005–2015, Texas Instruments Incorporated

7.6 Typical Characteristics

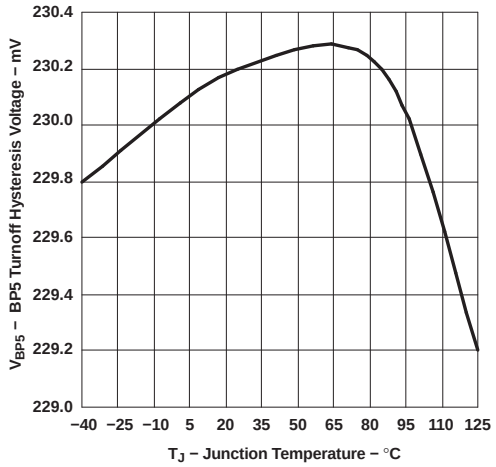

Figure 1. BP5 Turnoff Hysteresis Voltage vs Temperature

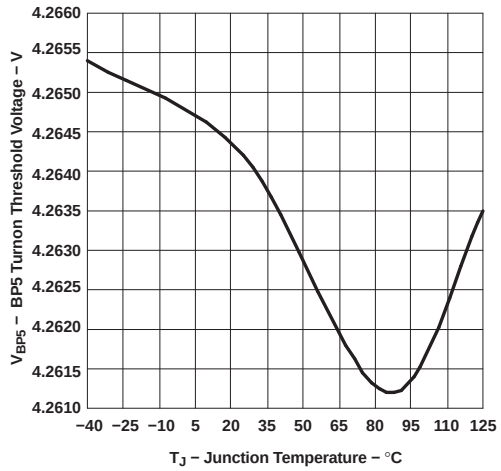

Figure 2. BP5 Turnon Threshold Voltage vs Temperature

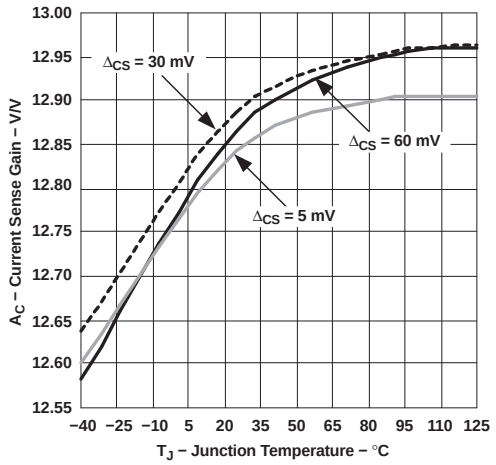

Figure 3. Current Sense Gain vs Temperature

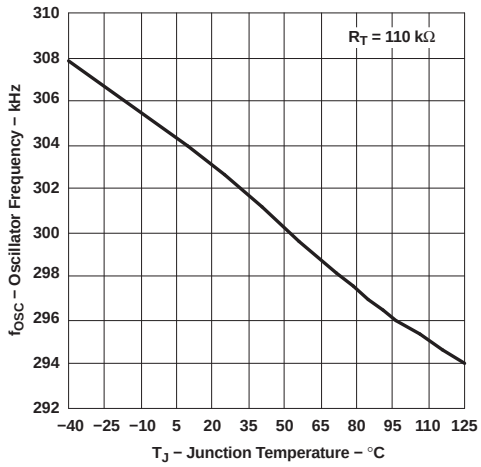

Figure 4. Oscillator Frequency vs Temperature

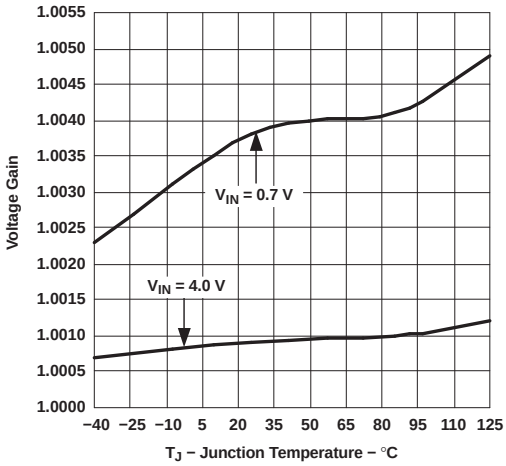

Figure 5. Differential Amplifier Voltage Gain vs Temperature

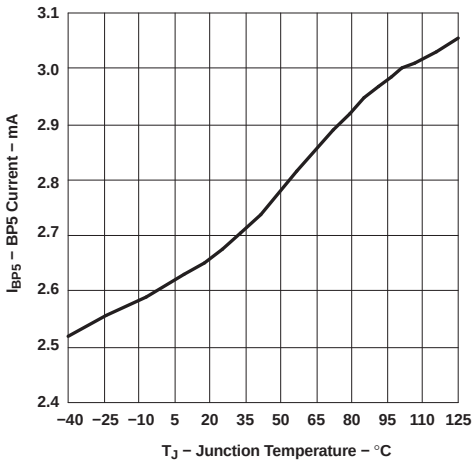

Figure 6. BP5 Current vs Temperature

Typical Characteristics (continued)

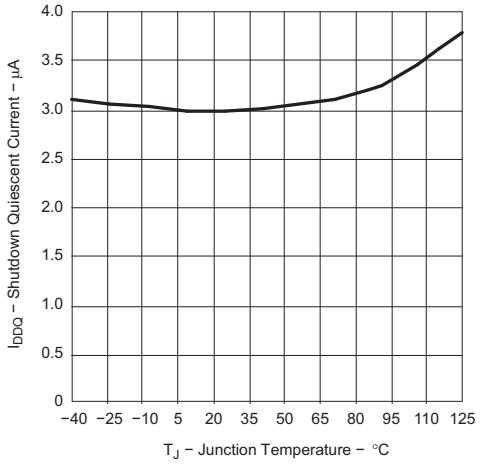

Figure 7. Shutdown Quiescent Current vs Temperature

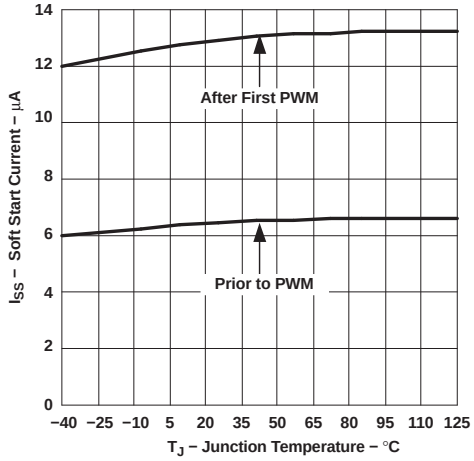

Figure 8. TRKX Soft Start Current vs Temperature

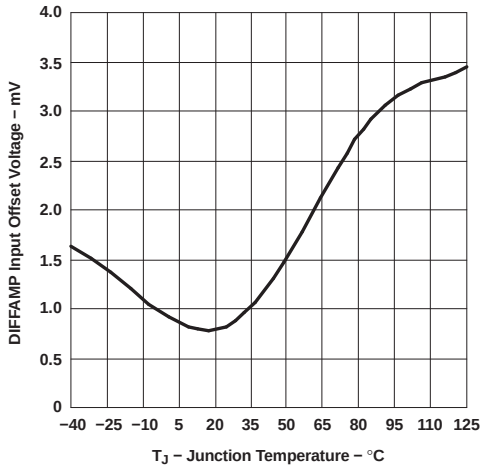

Figure 9. Differential Amplifier Input Offset Voltage vs Temperature

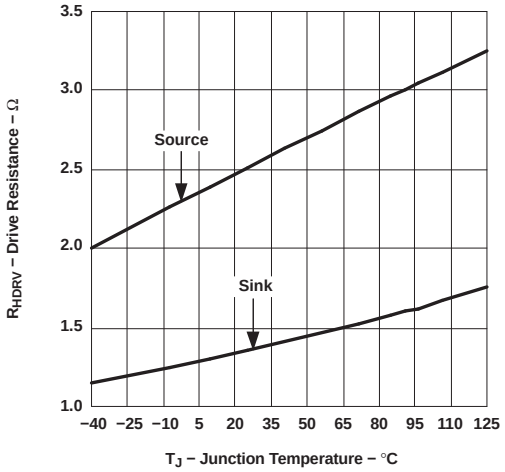

Figure 10. HDRV Source and Sink Resistance vs Temperature

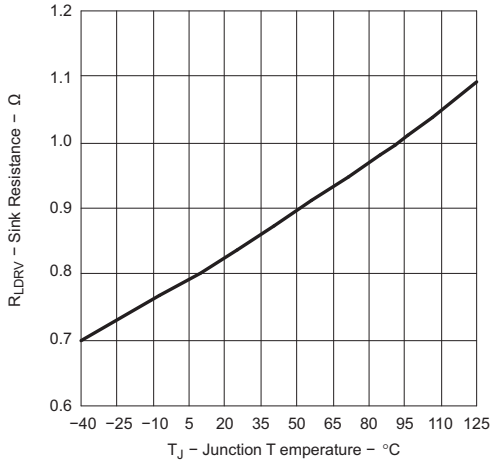

Figure 11. LDRV Sink Resistance vs Temperature

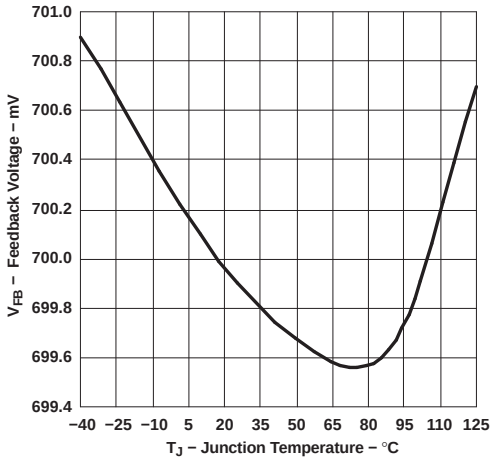

Figure 12. Feedback Voltage vs Temperature

Copyright © 2005–2015, Texas Instruments Incorporated

Typical Characteristics (continued)

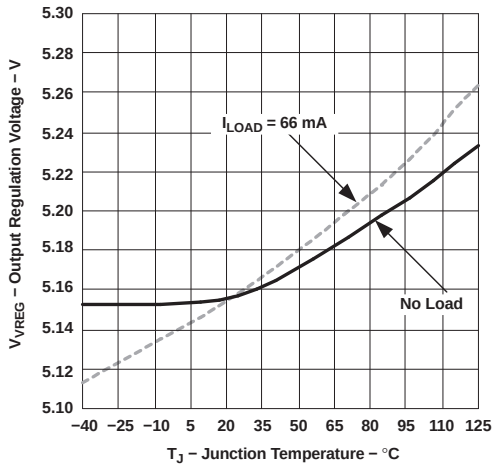

Figure 13. VREG Output Voltage vs Temperature

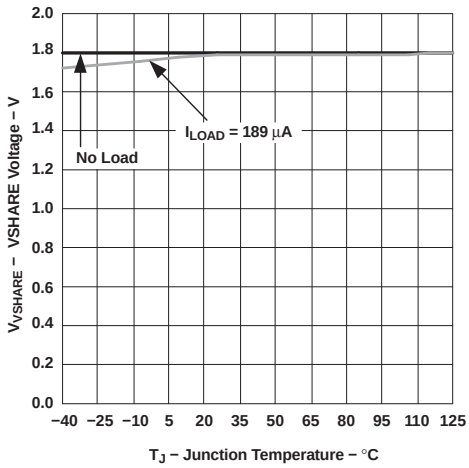

Figure 14. VSHARE Voltage vs Temperature

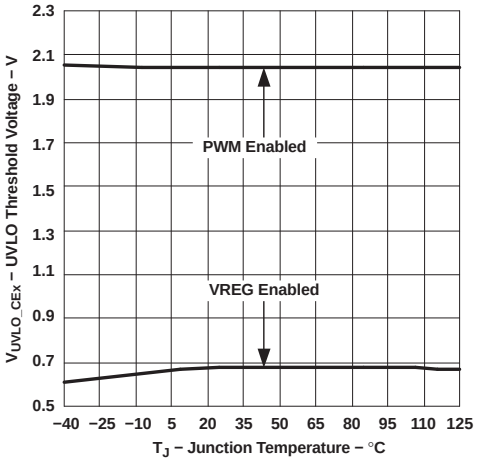

Figure 15. UVLO_CEX Threshold Voltage vs Temperature

8 Detailed Description

8.1 Overview

The TPS40140 operates with a programmable fixed switching frequency. It is a current feedback controller with forced phase current balancing. When compared to voltage mode control, the current feedback controller results in a simplified feedback network and reduced input line sensitivity. Phase current is sensed by using either the direct current resistance (DCR) of the filter inductors or current sense resistors installed in series with the output. See the section *Inductor DCR Current Sense*. The current signal is then amplified and superimposed on the amplified voltage error signal to provide current mode PWM control.

Other features include programmable input undervoltage lockout (UVLO), differential input amplifier for precise output regulation, user programmable operation frequency, programmable pulse-by-pulse overcurrent protection, output undervoltage shutdown and restart, capacitor to set soft-start time and power good indicators.

The TPS40140 is a versatile controller that can operate as a single controller or 'stacked' in a multi-controller configuration. A TPS40140 has two channels that may be configured as a multi-phase (single output) or as a dual, with two independent output voltages. The two channels of a single controller always switch 180° out-of-phase. See the *Feature Description* for further discussion on the clock and voltage master and clock and voltage slave.

Some pins are used to set the operating mode, and other pins' definition change based on the mode selected.

Copyright © 2005–2015, Texas Instruments Incorporated

8.2 Functional Block Diagram

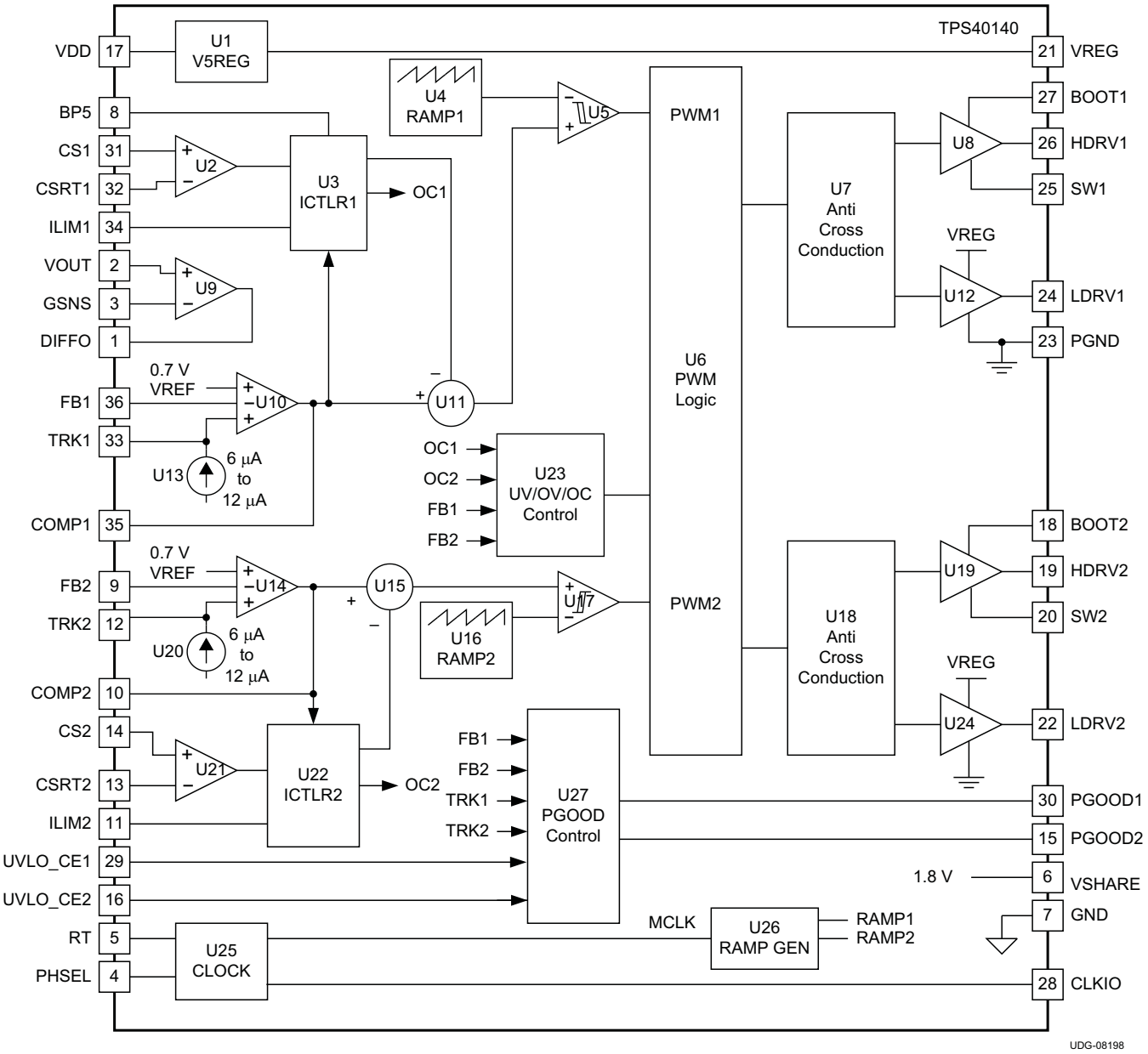

8.3 Feature Description

8.3.1 Clock Master and Clock Slave

A controller may function as a 'clock master' or a 'clock slave'. The term 'clock master' designates the controller, in a multi-controller configuration, that generates the CLKIO signal for clock synchronization between the clock master and the clock slaves. The CLKIO signal is generated when the 'RT' pin of the clock master is terminated with a resistor to ground and the PHSEL pin of the clock master is terminated with a resistor, or resistor string, to ground. The 'Clock slave' is configured by connecting the RT pin to BP5. Then the Clock slave receives the CLKIO signal from the clock master. The phasing of the slave is accomplished with a resistor string tied to the PHSEL pin. More information is covered in the *Clock Master, PHSEL, and CLKIO Configurations* section.

Feature Description (continued)

8.3.2 Voltage Master and Voltage Slave

A voltage master has the channel that monitors the output voltage and generates the 'COMP' signal for voltage regulation. A Voltage slave channel is configured by connecting the TRKx pin to BP5. Then the COMP signal from the master is connected to the COMPx pin on the Voltage slave. When the TRKx pin is connected to BP5 the COMPx output for that channel is put in a high impedance state, allowing the regulation for that channel to be controlled by the voltage master COMP signal.

8.3.3 Power Good

The PGOOD1, PGOOD2 pins indicate when the inputs and output are within their specified ranges of operation. Also monitored are the UVLO_CE1, UVLO_CE2 and TRK1 and TRK2 pins. The PGOOD has a high impedance when indicating inputs and outputs are within specified limits and is pulled low to indicate an out of limits condition. The PGOOD signal is held low until the respective TRK1 or TRK2 pin voltages exceed 1.4 V, then the undervoltage, overcurrent or overtemperature controls the state of PGOOD.

8.3.4 Power-On Reset (POR)

The internal POR function ensures the VREG and BP5 voltages are within their regulation windows before the controller is allowed to start.

8.3.5 Overcurrent

The operation during an overcurrent condition is described in the '*Overcurrent Detection and Hiccup Mode*' section. In summary, when the controller detects 7 clock cycles of an overcurrent condition, the upper and lower MOSFETs are turned off and the controller enters a 'hiccup' mode'. After seven soft start cycles, normal switching is attempted. If the overcurrent has cleared, normal operation resumes, otherwise the sequence repeats.

8.3.6 Output Undervoltage Protection

If the output voltage, as sensed by U23 of the functional block diagram on the FB pin becomes less than 0.588 V, the undervoltage protection threshold (84% of V_{REF}), the controller enters the hiccup mode as described in the *Overcurrent Detection and Hiccup Mode* section.

8.3.7 Output Overvoltage Protection

The TPS40140 includes an output overvoltage protection mechanism. This mechanism is designed to turn on the low-side FET when the FB pin voltages exceeds the overvoltage protection threshold of 810-mV (typical). The high-side FET turns off and the low-side FET turns on and stays on until the voltage on the FB drops below the undervoltage threshold. The controller then enters a hiccup recovery cycle as in the undervoltage case. The output overvoltage protection scheme is active at all times. If at any time when the controller is enabled, the FB pin voltage exceeds the overvoltage threshold, the low-side FET turns on until the FB pin voltage falls below the undervoltage threshold.

Output overvoltage is defined as any voltage greater than the regulation level that appears on the output. Overvoltage protection is accomplished by the feedback loop monitoring the output voltage via the FB pin. If, during operation the output voltage experiences an overvoltage condition the FB pin voltage rises and the control loop turns the upper FET off and the lower FET is turned on until the output returns to set level. This puts the overvoltage channel in a *boost mode* configuration and tends to cause the input voltage to be *boosted* up.

If the output overvoltage condition exists prior to the controller PWM switching starting, that is, no switching has commenced, the overvoltaged channel does not start PWM switching. This controller allows for operating with a prebiased output. Because the output is greater than the regulation voltage, no PWM switching occurs.

DESIGN HINT

Ensure there is sufficient load on the input voltage to prevent excessive boosting.

Copyright © 2005–2015, Texas Instruments Incorporated

8.4 Device Functional Modes

8.4.1 Protection and Fault Modes

There are modes of normal operation during start-up and shutdown as well various fault modes that may be detected. It is often necessary to know the state of the upper and lower MOSFETs in these modes. Table 1 shows a summary of these modes and the state of the MOSFETs. A description of each mode follows.

Table 1. Fault Mode Summary

MODE	UPPER MOSFET	LOWER MOSFET
Programmable UVLO_CEx = LOW	OFF	OFF
Power-on reset: fixed UVLO, BP5 < 4.25 V	OFF	OFF
Overcurrent	OFF, hiccup mode	OFF, hiccup mode
Output undervoltage	OFF, hiccup mode	OFF, hiccup mode
Output overvoltage	OFF	ON
CLKFLT, missing CLKIO at slave	OFF	OFF
PHSEL voltage > 4 V, or open to ground	OFF	OFF
Overtemperature	OFF	OFF

Copyright © 2005–2015, Texas Instruments Incorporated

9 Application and Implementation

NOTE

Information in the following applications sections is not part of the TI component specification, and TI does not warrant its accuracy or completeness. TI's customers are responsible for determining suitability of components for their purposes. Customers should validate and test their design implementation to confirm system functionality.

9.1 Application Information

The following sections are partitioned to facilitate applying the TPS40140 in various modes and configurations. The first sections describe functions that are used in all configurations. The following sections are specific to the configuration (that is, single controller, multiple controllers, master and slave).

9.1.1 Synchronizing a Single Controller to an External Clock

The TPS40140 has the ability to synchronize a single controller to an external clock. The clock must be a pulse stream at 6 or 8 times the master PWM frequency. See Figure 16.

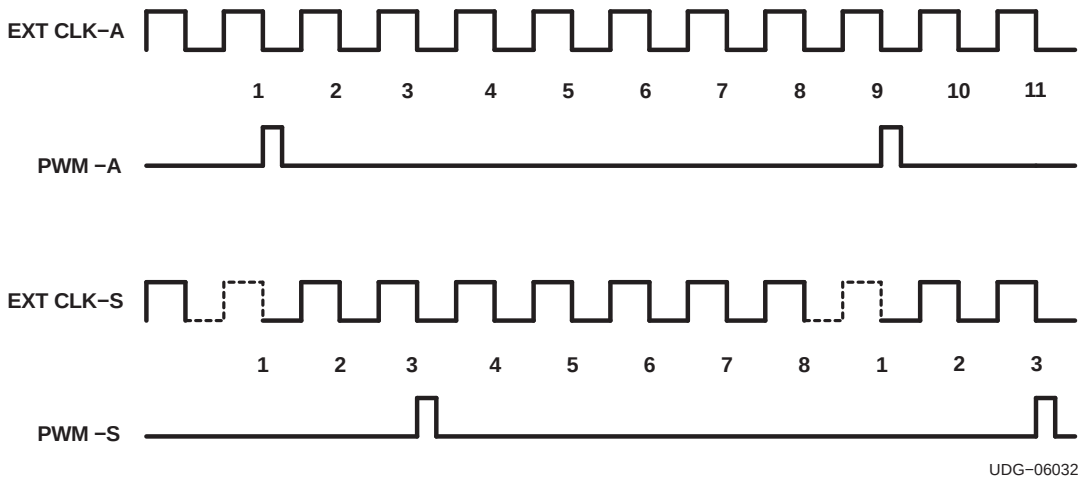

Figure 16. Synchronizing a Single Controller to an External Clock

Synchronizing the single controller to an external clock is similar to synchronizing a clock slave to a clock master. The single controller is put in clock slave mode by connecting the RT pin to BP5, disabling the internal clock generator. If the external CLKIO signal is a clock stream without any missing pulses, the master synchronize to an arbitrary pulse so there is no determinant phase synchronization. Without a missing pulse, the PWM frequency is 1/8 of the external clock. If the external CLKIO signal has a missing pulse every 6 cycles or 8 cycles, the controller synchronizes based on the missing pulse which would be in the 6th or 8th position. With the missing pulse, the phase synchronization of the master, to the missing pulse, can be controlled by the voltage on the PHSEL pin. See the section on *DIGITAL CLOCK SYNCHRONIZATION*. Phase shifting would also be desirable if more than one controller were to be synchronized to the same external clock. The high-level threshold for the external clock is 3.2 V, and the low-level threshold is 0.5 V. The typical duty ratio is approximately 0.5.

Figure 16 shows a time slice of the two external clock possibilities and the resulting PWM signal. EXT CLK-A is the continuous clock with no missing pulse and the PWM-A signal could be frequency synchronized anywhere in the clock stream. The PWM signal is at 1/8 of the EXT CLK-A frequency. EXT CLK-S is the external clock stream with a missing pulse every 8 cycles. The phasing of the PWM-S is based on the voltage on the PHSEL pin. For PHSEL grounded, the PWM-S signal is shifted 90 degrees from what would be the falling edge of the missing pulse as shown in Figure 16.

Copyright © 2005–2015, Texas Instruments Incorporated

Application Information (continued)

If the controller has free running operation (in clock master mode) before receiving the external clock, the switching frequency is set by connecting a resistor from the RT pin to GND. In order to receive the external clock, the PHSEL pin should be connected to GND to disable the output of CLKIO pin. A 500-Ω resistor is recommended to be placed between the external clock and the CLKIO pin. When dynamically shorting the RT pin to BP5 through a switch, the controller switches to clock slave mode and starts to synchronize to the external clock.

9.1.2 Split Input Voltage Operation

It may be advantageous to operate a master controller's power stages from $V_{IN\ 1}$, different from the slave controller(s) power stages, $V_{IN\ 2}$ where $V_{IN1} > V_{IN\ 2}$. This enables the system designer to optimize the current taken from the system input voltages. In order to balance the output currents, a programmed offset is applied to ILIM2 of the slave controller(s). The voltage on this pin sets the offset current for channel 2.

The ramp offset is determined by a resistor, R_{SET}, connected to the ILIM2 pin of the slave, and is given by:

$$R_{SET} = V_{OUT}\left(\frac{1}{V_{IN2}} - \frac{1}{V_{IN1}}\right)100\ k\Omega \tag{1}$$

9.1.3 Configuring Single and Multiple ICs

The controller may be configured for a single output, 2-phase mode or a dual output voltage mode. In the dual output mode the input voltages and the output voltages are independent of each other. In 2-phase mode the input voltages and output voltages are tied together, respectively and certain other pins must be configured. The two phases of a single controller are always 180° out-of-phase. The entry in Table 3 that refer to "TO NETWORK" means the normal resistor-capacitor network used for control loop compensation. The other entries refer to components that are typically connected to the device pin.

Table 2. Configuring Clock Mode

TIMING RESISTANCE VOLTAGE (V)	CLOCK MODE
< 0.7 V (resistor to GND)	Master (or single device)
> 1 V (tied to VREG or VDD)	Slave

9.1.3.1 Single Device Operation

A single controller may be configured as a 2-phase or dual output. A summary of the modes and device pin connections for a single controller is given in Table 3. The basic schematic of a single controller operating in a 2-phase mode is shown in Figure 17. The dual output schematic is shown in Figure 18.

Table 3. TPS40140 Single Device Mode Selection and Pin Configuration

DEVICE PIN	FOR 2 PHASE MODE	FOR DUAL OUTPUT MODE
COMP1	TO NETWORK	TO NETWORK
COMP2	COMP1	TO NETWORK
TRK1	TO SS CAPACITOR	TO SS CAPACITOR
TRK2	TO BP5	TO SS CAPACITOR
ILIM1	TO SET RESISTORS	TO SET RESISTORS
ILIM2	GND	TO SET RESISTORS
FB1	TO NETWORK	TO NETWORK
FB2	GND	TO NETWORK
PHSEL	GND	GND
PGOOD1	TO PULLUP RESISTOR	TO PULL-UP RESISTOR
PGOOD1	TO PULLUP RESISTOR	TO PULL-UP RESISTOR
CLKIO	OPEN	OPEN

Copyright © 2005–2015, Texas Instruments Incorporated

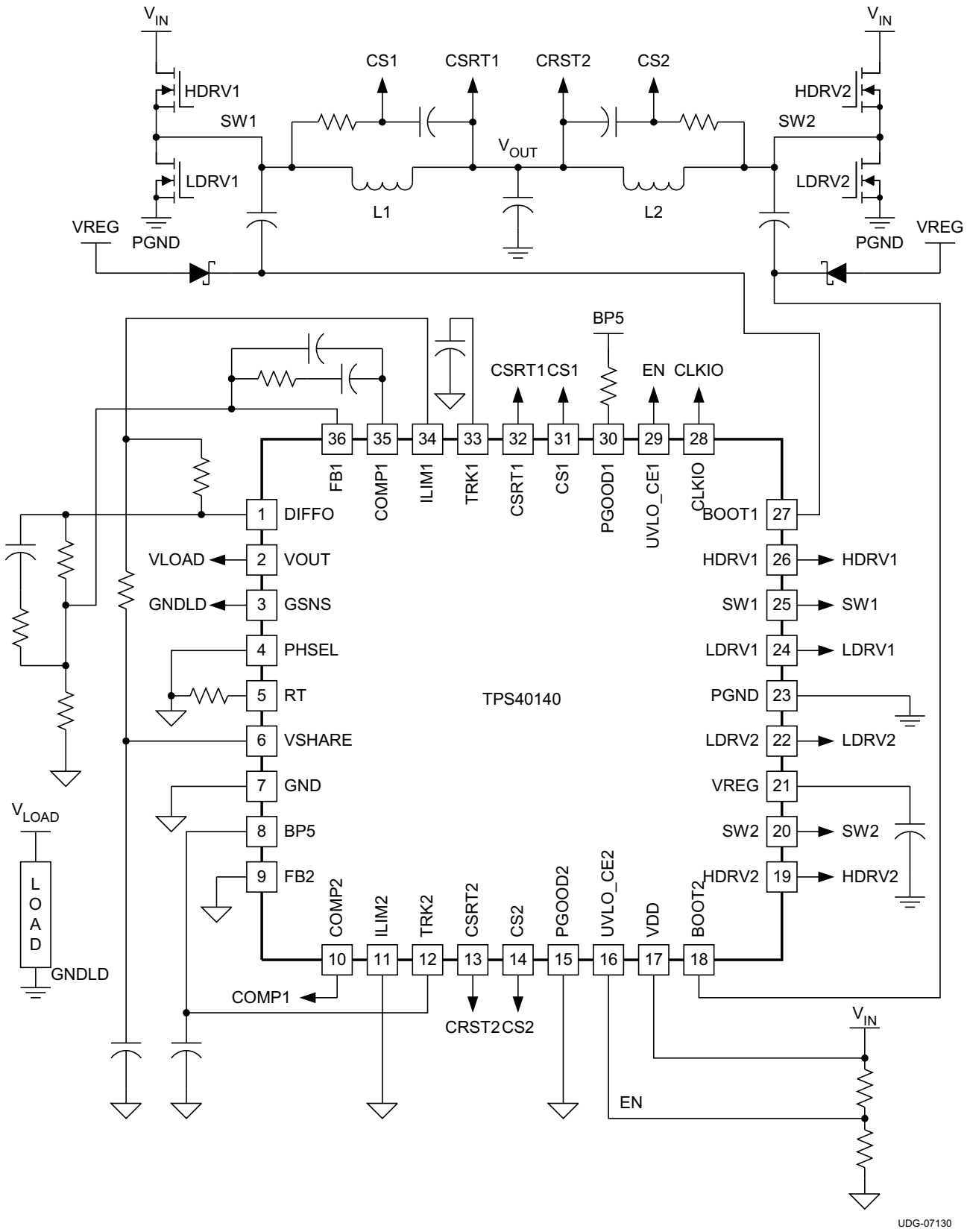

Figure 17. Typical Applications Circuit, 2-Phase Mode

Copyright © 2005–2015, Texas Instruments Incorporated

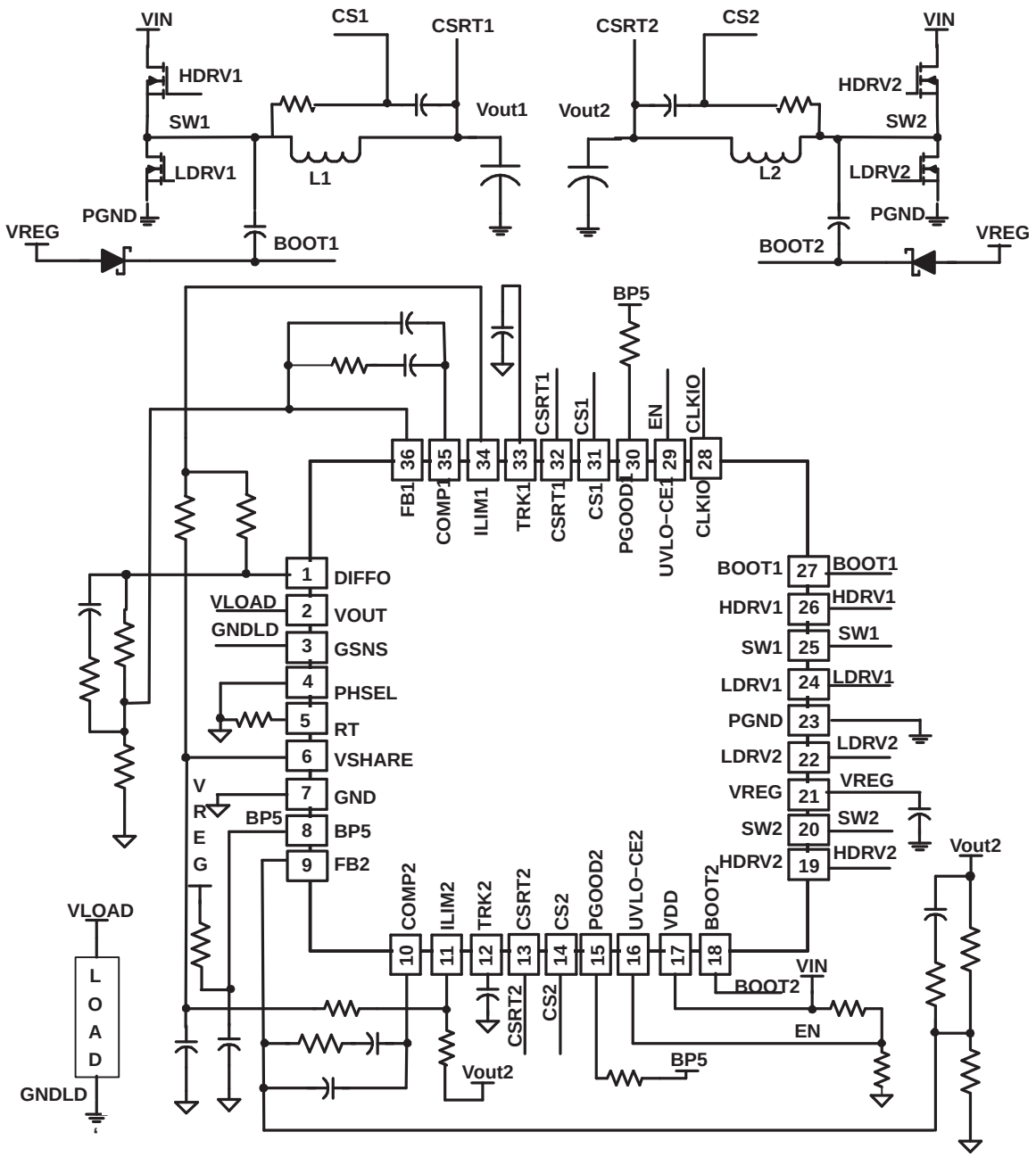

Figure 18. Typical Applications Circuit, Dual Mode

9.1.3.2 Multiple Devices

In a multiple device system, it is often desirable to synchronize the clocks each device to minimize input ripple current as well as radiated and conducted emissions. This is accomplished by designating one of the controllers as the master and the other devices as 'slaves. The master generates the system clock, CLKIO, and it is distributed to the slaves. This is the most useful configuration of multiple devices and the one that is demonstrated in this data sheet. It is described in more detail in the *Clock Master, PHSEL, and CLKIO Configurations* section.

To increase the total current capability, or number of outputs, a single slave controller can be added to a master controller as shown in Figure 21. The configuration of the 2-phase master and a 2-phase slave controller is also shown in Table 4 It is possible to have the master controller operate on one switching frequency and the slave controllers on another, independent frequency. In a multi-phase system the slave controllers would continue to share load current with the master. This is not a preferred configuration and is mentioned here only for completeness.

The 10-kΩ resistor connected from the CLKIO line to GND is required to ensure that the CLKIO line falls to GND quickly when the master device is shutdown or powers off. The master CLKIO pin goes to a high impedance state at these times and if the CLKIO line was high, there is no other active discharge part. The slave controllers look at the CLKIO line to determine if the system is supposed to be running or not. A level below 0.5 V on CLKIO is required for this purpose.

NOTE

In any system configured to have a CLK master and CLK slaves, a 10-kΩ resistor connected from CLKIO to GND is required.

Table 4. TPS40140 Two-Device, 4-Phase Mode Selection and Pin Configuration

DEVICE PIN, MASTER	MASTER, 2-PHASE	DEVICE PIN, SLAVE	SLAVE, 2-PHASE
COMP1	TO NETWORK	COMP1	TO MASTER, COMP1
COMP2	COMP1	COMP2	TO MASTER, COMP1
TRK1	TO SS CAPACITOR	TRK1	TO BP5
TRK2	TO BP5	TRK2	TO BP5
ILIM1	TO SET RESISTORS	ILIM1	GND
ILIM2	GND	ILIM2	GND
FB1	TO NETWORK	FB1	GND
FB2	GND	FB2	GND
PHSEL	39-kΩ TO GND	PHSEL	GND
PGOOD1	TO PULLUP RESISTOR	PGOOD1	TO PULL-UP RESISTOR
PGOOD1	TO PULLUP RESISTOR	PGOOD1	TO PULL-UP RESISTOR
CLKIO	TO SLAVE, CLKIO	CLKIO	TO MASTER, CLKIO
VSHARE	TO SLAVE, VSHARE	VSHARE	TO MASTER, VSHARE
BP5	TO SLAVE, BP5	BP5	TO MASTER, BP5

DESIGN HINT

TI recommends adding a 220-pF ceramic capacitor in parallel with the PHSEL resistor string. This capacitor is connected from the PHSEL pin of the master control to GND.

Copyright © 2005–2015, Texas Instruments Incorporated

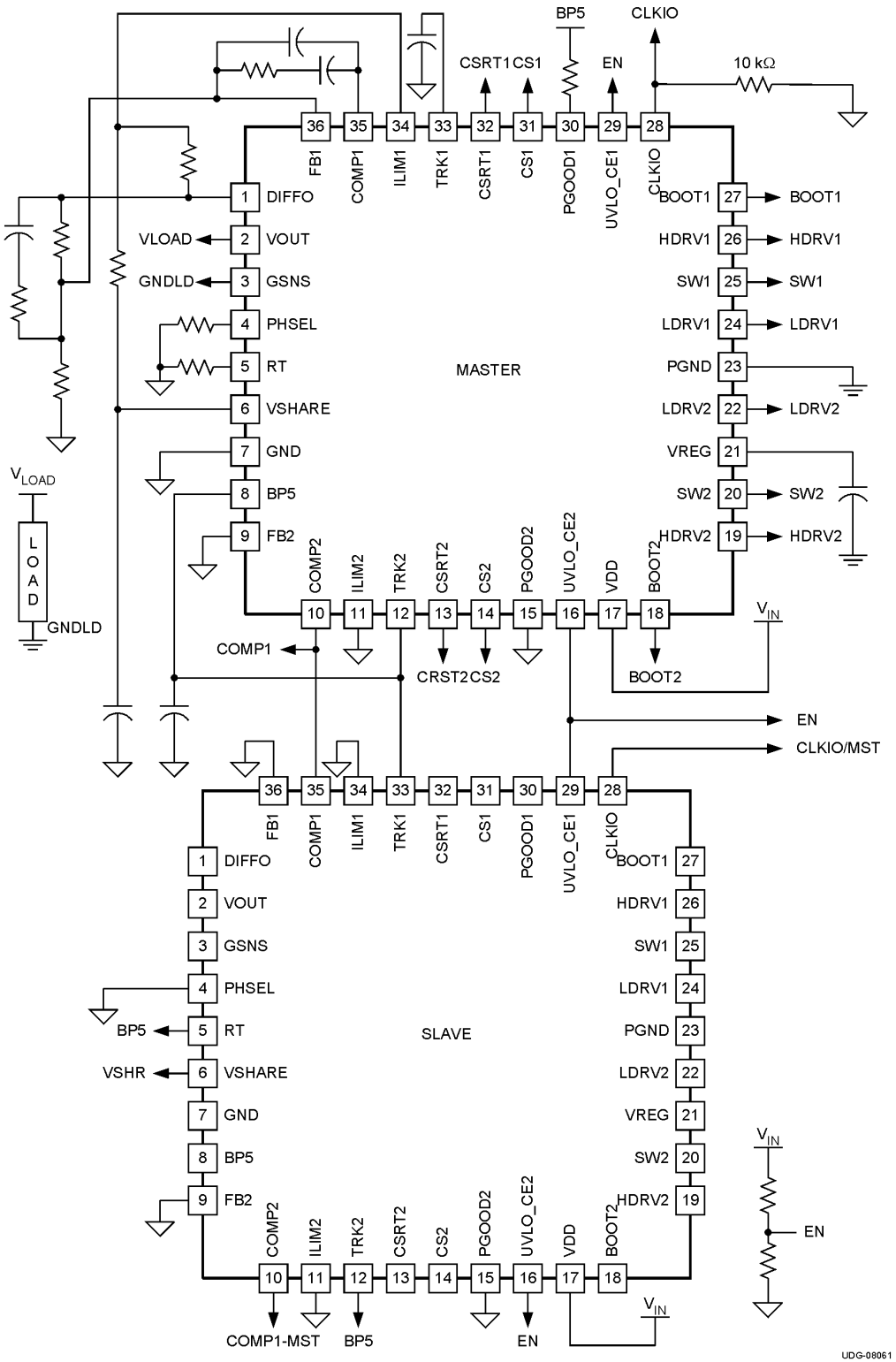

Figure 19. Typical Applications Circuit, 4-Phase Mode

In this configuration, the master senses that there is one slave controller, by the 39-kΩ resistor on the PHSRL pin, and distributes the CLKIO signal. The slave controller senses the 0-V level on its PHSEL pin and delays the proper number of CLKIO pulses to be 90° out-of-phase with the master.

Two ICs could also be configured as a 2-phase, single output master and a slave which has two independent outputs, but is synchronized with the master controller clock. Table 5 shows the configuration.

Table 5. TPS40140 Two-Device, 2-Phase Master and a Dual-Output Slave Configuration

DEVICE PIN, MASTER	MASTER, 2 PHASE	DEVICE PIN, SLAVE	SLAVE, DUAL OUTPUT
COMP1	To network	COMP1	To network
COMP2	COMP1	COMP2	To network
TRK1	To SS capacitor	TRK1	To SS capacitor
TRK2	To BP5	TRK2	To SS capacitor
ILIM1	To set resistors	ILIM1	To set resistors
ILIM2	GND	ILIM2	To set resistors
FB1	To network	FB1	To network
FB2	GND	FB2	To network
PHSEL	39-kΩ to GND	PHSEL	GND
PGOOD1	To pullup resistor	PGOOD1	To pullup resistor
PGOOD1	To pullup resistor	PGOOD1	To pullup resistor
CLKIO	To slave, CLKIO	CLKIO	To master, CLKIO

9.1.3.3 Clock Master, PHSEL, and CLKIO Configurations

The clock synchronization between the master and the slave controller(s) is implemented in a simple configuration of series 39-kΩ resistors. There is a 20-µA current source from the PHSEL pin of the master controller. Depending on the number of slave controllers connected, the slave controllers selects the proper delay from the master CLKIO signal to accomplish phase interleaving. On a given master or slave controller, the two phases are always 180° out-of-phase.

The CLKIO signal has either six or eight clocks for each cycle of the switching period.

For maximum flexibility the master and slave controllers can be either in a 2-phase configuration or a Dual output configuration

9.1.3.3.1 One Device Operation

The basic configuration of a single device is shown in Figure 20.

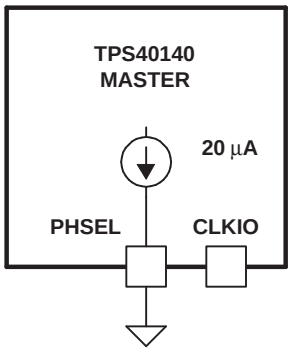

Figure 20. Single Controller Only, Two Phases

Copyright © 2005–2015, Texas Instruments Incorporated

9.1.3.3.2 Two ICs Operation

To increase the total current capability, or number of outputs, a single slave controller can be added as shown in Figure 21.

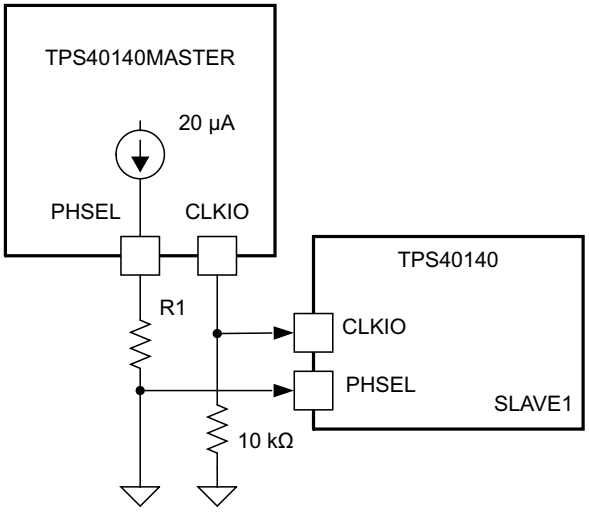

Figure 21. Master Controller and One Slave Controller, Four Phases

In this configuration, the master senses that there is one slave controller, and distributes the CLKIO signal. The slave controller senses the zero-volt level on its PHSEL pin and delays the proper number of CLKIO pulses to be 90° out-of-phase with the master.

9.1.3.3.3 Three ICs Operation

To increase the total current capability to six phases, or to increase the number of outputs, two slave controllers can be added as shown in Figure 22. In this configuration for perfect interleaving, the master and slaves are 120° out-of-phase. The CLKIO signal has six clocks for each cycle of the switching period; therefore, the switching period is reduced. In this six-phase mode, the switching frequency is increased 33%.

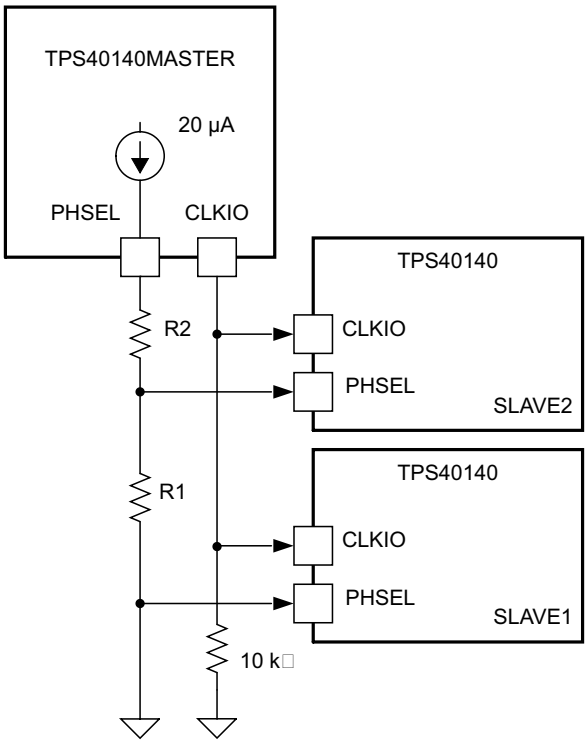

Figure 22. Master Controller and Two Slave Controllers, Six Phases

In this configuration, the master senses that there are two slave controllers, and distributes a six-phase CLKIO signal. The slave controllers sense the voltage on their PHSEL pins, and delay the proper number of CLKIO pulses to be 60° or 120° out-of-phase with the master.

9.1.3.3.4 Four ICs Operation

To further increase the total current capability to eight phases, or to increase the number of outputs, three slave controllers can be added as shown in Figure 23.

Copyright © 2005–2015, Texas Instruments Incorporated

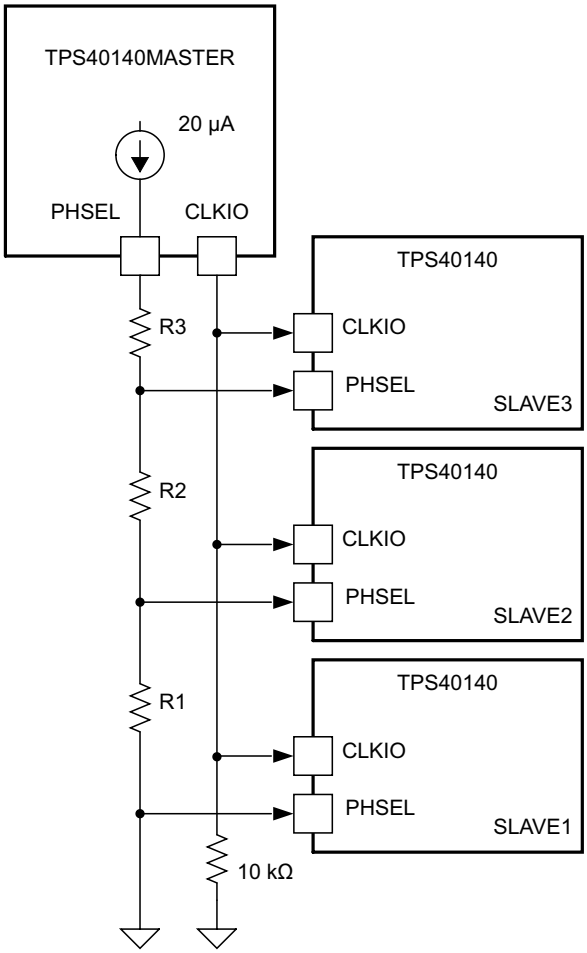

Figure 23. Master Controller and Three Slave Controllers, Eight Phases

In this configuration, the master senses that there are three slave controllers, and distributes a eight-phase CLKIO signal. The slave controllers sense the voltage on their PHSEL pins and delay the proper number of CLKIO pulses to be 45°, 90°, and 135° out-of-phase with the master.

9.1.3.3.5 Six ICs Operation

To further increase the total current capability to twelve phases, or to increase the number of outputs, five slave controllers can be added as shown in Figure 24.

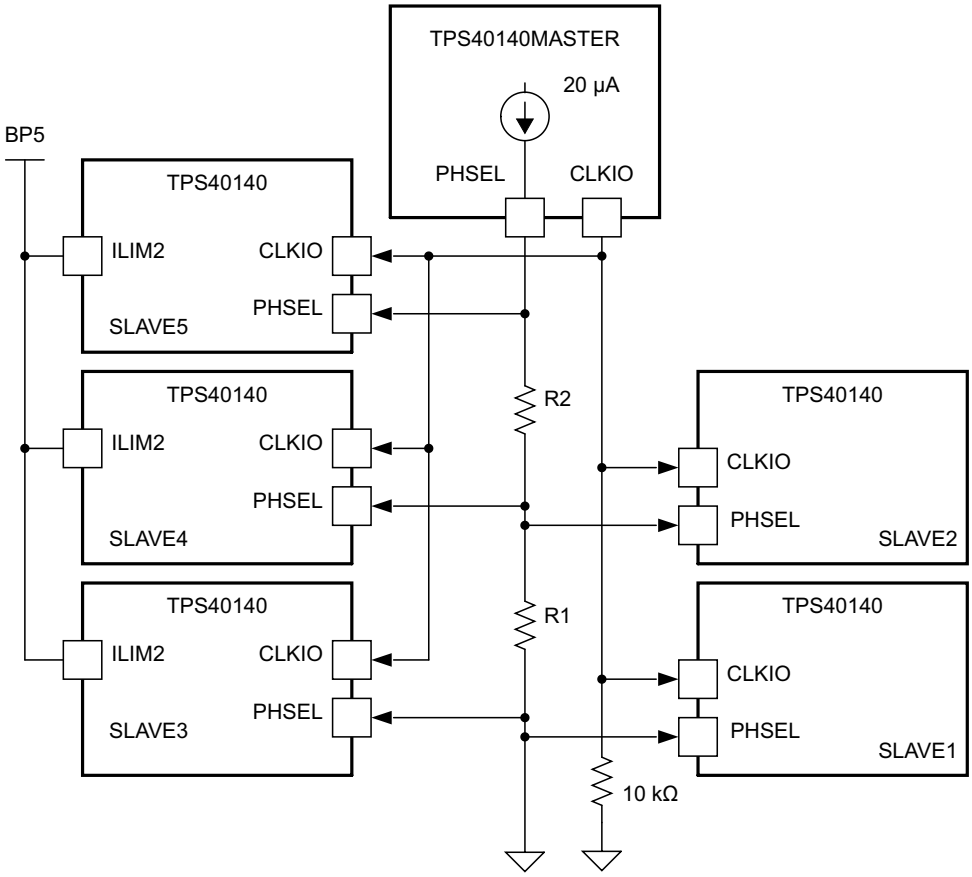

Figure 24. Master Controller and Five Slave Controllers, 12-Phases

In this configuration, the master senses that there are two slave controllers (due to the 2 resistors) and distributes a six-phase CLKIO signal. Slave1 and slave2 are turned on at 60° and 120° respectively, as before with two slaves. However, to get twelve phases with a six-phase clock, both edges of the CLKIO signal are used to control the slaves. With the ILIM2 tied high on slave3,slave4, and slave5, they turn on at the rising edge of CLKIO while the master and slave1 and slave2 turn on at the falling edge of CLKIO.

If four slaves are desired, just delete one of the slaves from Figure 24. The interleaving is not perfect because there is be 30° between the master and three slaves. The deleted slave causes 60° between the two adjacent slaves. See Figure 26 for phasing details.

Copyright © 2005–2015, Texas Instruments Incorporated

9.1.3.3.6 Eight ICs Operation

To further increase the total current capability to sixteen phases, or to increase the number of outputs, seven slave controllers can be added as shown in Figure 25.

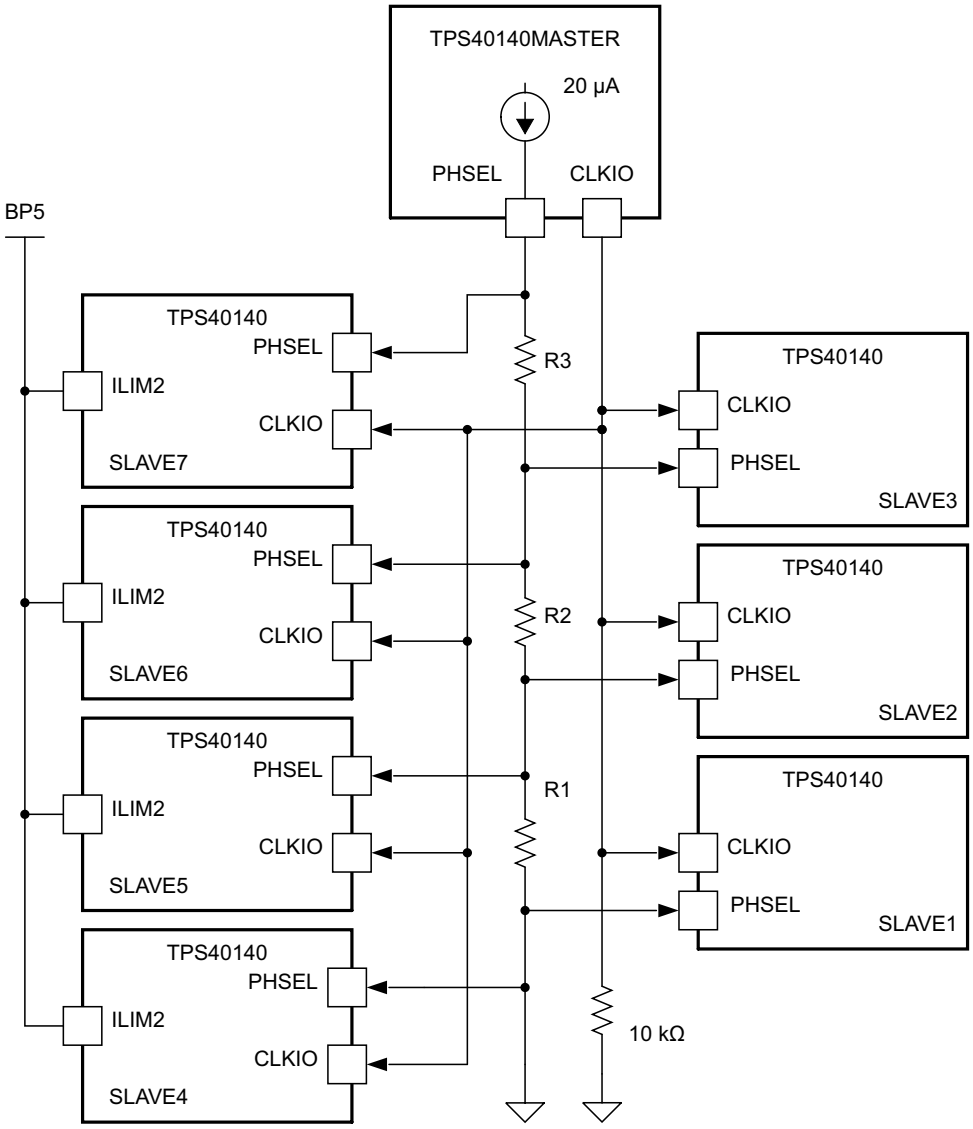

Figure 25. Master Controller and Seven Slave Controllers, 16 Phases

In this configuration, the master senses that there are three slave controllers (due to the three resistors) and distributes an eight-phase CLKIO signal. Slave1, slave2, and slave3 are turned on at 90°, 45°, and 135° respectively as before with three slaves. However, to get sixteen phases with an eight-phase clock, both edges of the CLKIO signal are used to control the slaves. With the ILIM2 tied high on slave4, slave5, slave6, and slave7 they turn on at the rising edge of CLKIO, while the master and slave1, slave2, and slave3 turn on at the falling edge of CLKIO. If six slaves are desired, just delete one of the slaves from Figure 25. The interleaving is not be perfect because there is 22.5° between the master and three slaves. The deleted slave causes 45° between the two adjacent slaves. See Figure 26 for a phasing details.

9.1.4 Digital Clock Synchronization

Figure 26 is a summary of the master and slave clock phasing. The master and the slaves can be selected to be a multi-phase, single output configuration and/or several independent output voltage rails, independent of the clocking.

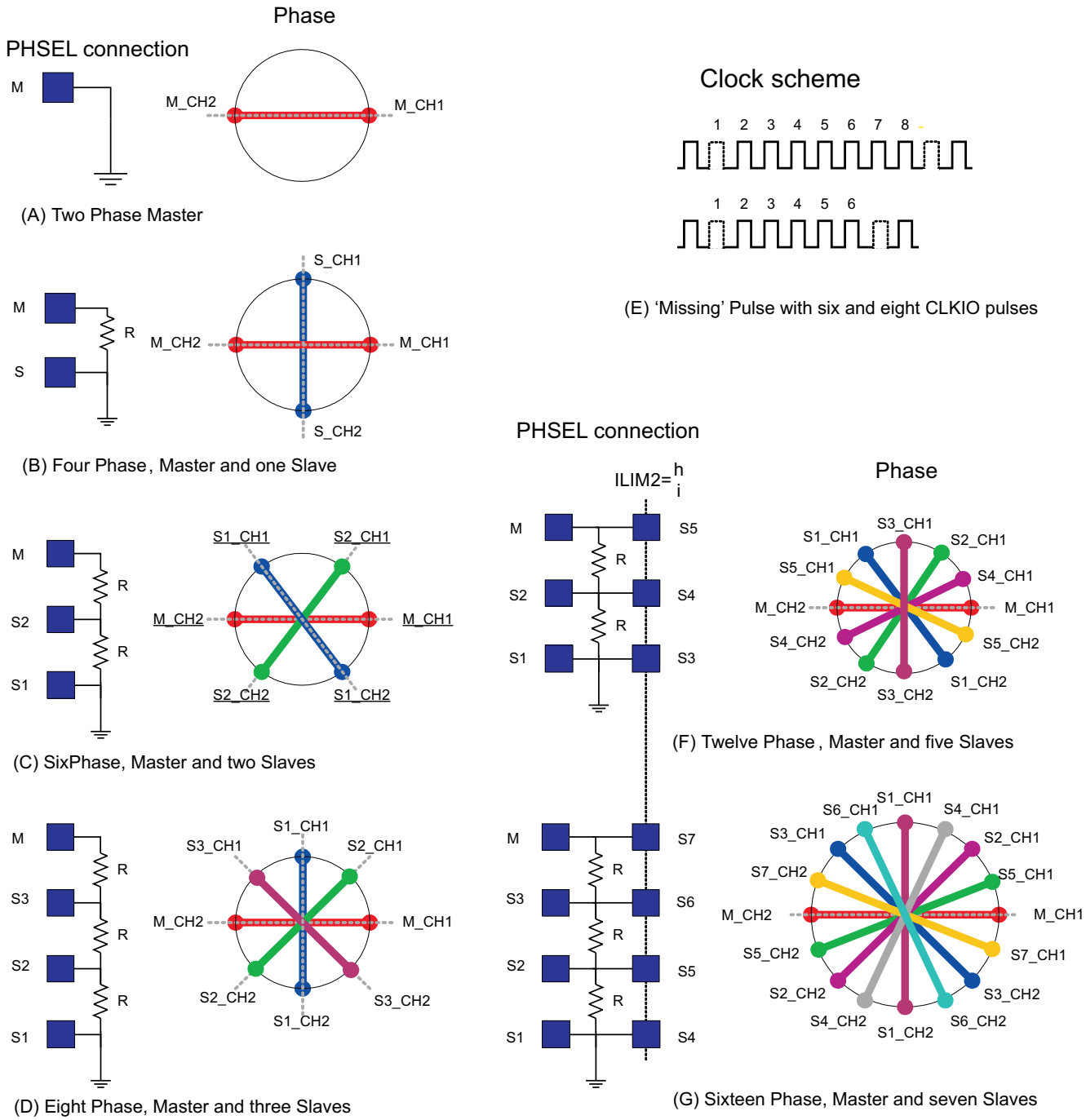

Figure 26. Clock Phasing Summary

Copyright © 2005–2015, Texas Instruments Incorporated

9.1.4.1 Basic Configurations for 2, 4, 6, 8, 12, or 16 Phases

The solid square boxes in Figure 26 represent the PHSEL pin of the master (M) controller or a numbered slave controller (S1-S7). The labels on the spokes of the wheels indicate a master Channel 1 and master Channel 2 (M_CH1 and M_CH2) and numbered slaves Channel 1 and slave Channel 2 (Sn_CH1 and Sn_CH2). The Channel 1 and Channel 2 of a given master or slave is always 180° out-of-phase.

The master and slaves are automatically configured for proper phasing based on the resistor string from the master to the slaves. All the resistors are 39 kΩ to 41.2 kΩ. Part (A) above shows a single controller operating two phases 180° out-of-phase. Part (B) above shows four phase operation. This is configured by connecting a single resistor from the master PHSEL to GND and grounding the slave PHSEL pin. The individual channels are 90° out-of-phase. Part (C) above shows six phase operation. This is configured by connecting two resistors from the master PHSEL to GND. The first resistor tap is connected to slave2 PHSEL pin and then grounding the slave1 PHSEL pin. The individual channels are 60°out-of-phase. Part (D) above shows eight phase operation. This is configured by connecting three resistors from the master PHSEL to GND. The first resistor tap is connected to slave3 PHSEL pin. The second resistor tap is connected to slave2 PHSEL pin and then grounding the slave1 PHSEL pin. The individual channels are 45° out-of-phase. Part (F) above shows twelve phase operation. This is configured by connecting two resistors from the master PHSEL to GND. The master PHSEL pin is also connected to slave5 PHSEL pin. The first resistor tap is connected to slave2 and slave4 PHSEL pins and then grounding the slave1 and slave3 PHSEL pins. The individual channels are 30° out-of-phase. Additionally, the ILIM2 pins of slave5, slave4 and slave3 are left open (internal pullup) or externally connected to BP5. Part (G) above shows sixteen phase operation. This is configured by connecting three resistors from the master PHSEL to GND. The master PHSEL pin is also connected to slave7 PHSEL pin. The first resistor tap is connected to slave3 and slave6 PHSEL pins. The second resistor tap is connected to slave2 and slave5 PHSEL pins and then grounding the slave1 and slave4 PHSEL pins. The individual channels are 22.5° out-of-phase. Additionally, the ILIM2 pins of slave7, slave6, slave5, and slave4 are left open (internal pullup) or externally connected to BP5.

9.1.4.2 Configuring for Other Number of Phases

Configuring for other than 2, 4, 6, 8, 12 or 16 phases is simply a matter of not attaching one or more slave controllers. The phasing between master and populated slaves is as shown above. For example a 3-phase system could be configured with a master CH1 and master CH2 and 1 phase of a slave. Referring to Part (B) above, the 3 phases could be master CH1, master CH2 and slave CH1 or slave CH2 as shown in Figure 27.

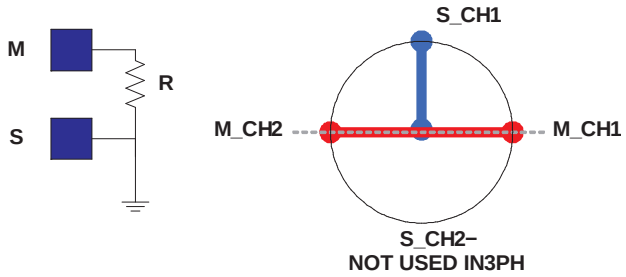

Figure 27. Phase System: 2 Channels of the Master and 1 Channel of the Slave

The 3-phase system could also be configured with 1 channel of the master and 2 channels of the slave. Referring to Part (B) above, the 3 phases could be master CH1 or master CH2 and slave CH1 and slave CH2. In either of these configurations there is 90° between two of the channels and 180° between the other channel. The unused channel could be another independent output voltage whose clocking would occupy the phase not used in the 3-phase system. This philosophy can be used for any number of phases not shown in Figure 26, *Clock Phasing Summary*.

For example, a 10-phase system could be configured as shown in Figure 28.

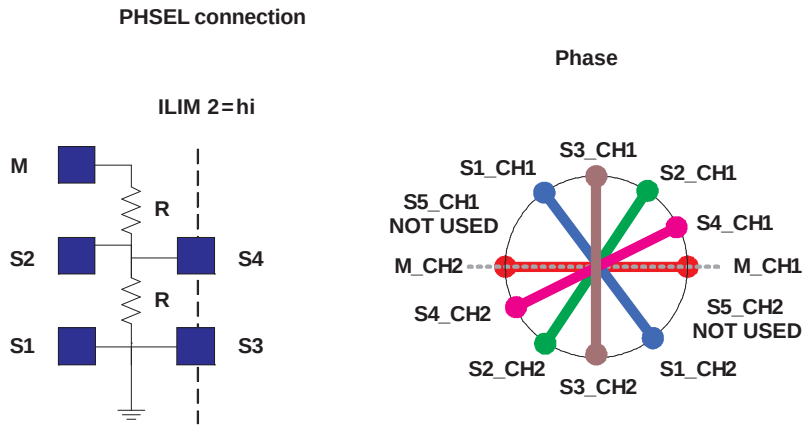

Figure 28. Ten-Phase System With Slaves Not Attached

Clocking between the attached slave channels is as shown.

9.1.5 Typical Start-Up Sequence

Figure 29 shows a typical start-up with the VDD applied to the controller and then the UVLO-CEx being enabled. Shutdown occurs when the VDD is removed.

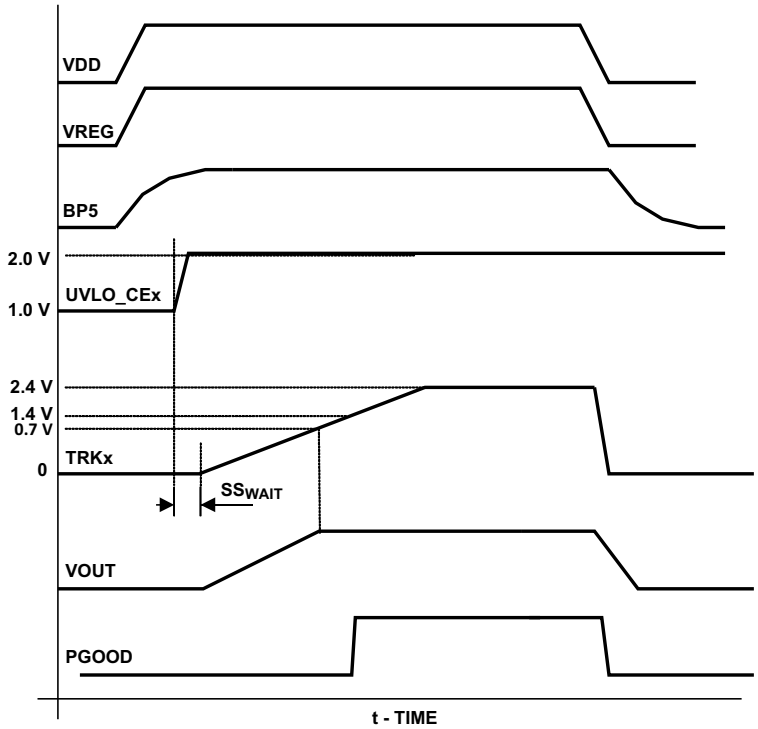

Figure 29. Typical Start-Up and Shut-Down Sequence

Copyright © 2005–2015, Texas Instruments Incorporated

9.1.6 Track (Soft-Start Without PreBiased Output)

A capacitor connected to the TRKx pins sets the power-up time. When UVLO_CEx is high and the internal power-on reset (POR) is cleared, the calibrated current source, starts charging the external soft start capacitor with 12-µA. The PGOOD pin is held low during the start-up. The rising voltage across the capacitor serves as a reference for the error amplifier, U10 and U14. When the soft start voltage reaches the level of the reference voltage, V_{REF} = 0.7 V, the converter's output reaches the regulation point and further voltage rise of the soft-start voltage has no effect on the output. When the soft start voltage reaches 1.4 V, the powergood (PGOOD) function is cleared to be reported on the PGOOD pin. Normally the PGOOD pin goes high at this time. Equation 2 is used to calculate the value of the soft-start capacitor. C_{SS} is in Farads and t_{SS} is given in seconds.

$$t_{SS} = C_{SS} \times 58 \times 10^3 \tag{2}$$

9.1.7 Soft-Start With PreBiased Outputs

For prebiased outputs the TPS40140 uses two levels of soft-start current that charge the soft-start capacitor connected to the TRKx pin(s). PWM switching begins when the TRKx voltage rises to the voltage present on the FBx pin. When the first PWM pulse occurs, the charging current is increased to 12 µA. Figure 30 shows the typical waveforms present on the TRKx pin and the output voltage, VOUT when VOUT is prebiased. TRKx rises due to the 6 µA current, until at 1 the voltage on TRKx equals the prebiased voltage on the FBx pin, at time t1. At this time, the soft-start current is increased to 12 µA and TRKx rises with an increase in the slope. When TRKx reaches 0.7 V, at time t2, the output should be in regulation. The voltage on the TRKx pin continues to rise. When the TRKx voltage is 1.4 V, at time t3, the PGOODx signal is enabled. The TRKx voltage continues to rise to 2.4 V where it is clamped internally. This approach provides for an accurate detection of the threshold where FBx = TRKx. Figure 31 is a block diagram of the implementation. The calculation for the soft start time, due to prebias, includes the time from t0 to t1, plus the time from t1 to t2, as shown in Equation 3 through Equation 5.

$$t1 = \frac{C_{SS}}{6\ \mu A} \times \left(\frac{V_{OUT} \times R_{BIAS}}{R1 + R_{BIAS}}\right)$$

$$t2 = \frac{C_{SS}}{12\ \mu A} \times \left(0.7\ V - \left(\frac{V_{OUT} \times R_{BIAS}}{R1 + R_{BIAS}}\right)\right) \tag{3}$$

where

- C_{SS} is in Farads
- t_{SS} is in seconds (4)

$$t_{SS} = t1 + t2 \tag{5}$$

If there is no prebias (V_{OUT} = 0 V), the equation reduces to case without prebias.

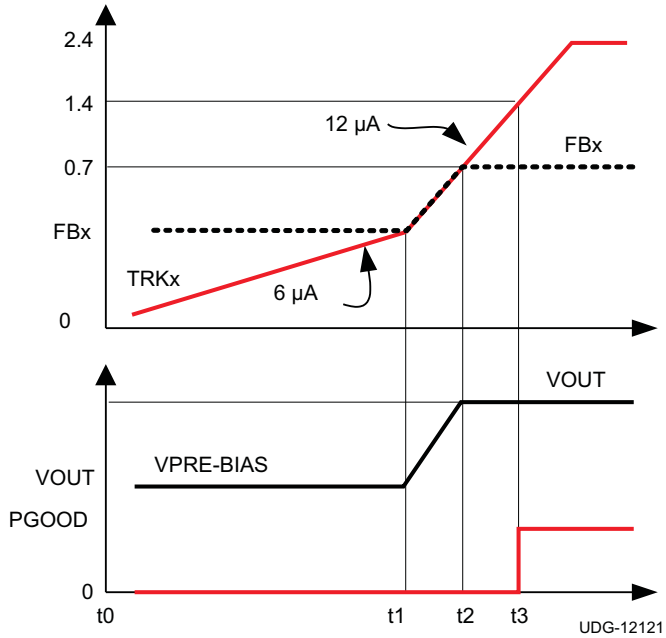

Figure 30. Soft-Start With PreBiased Output Waveforms

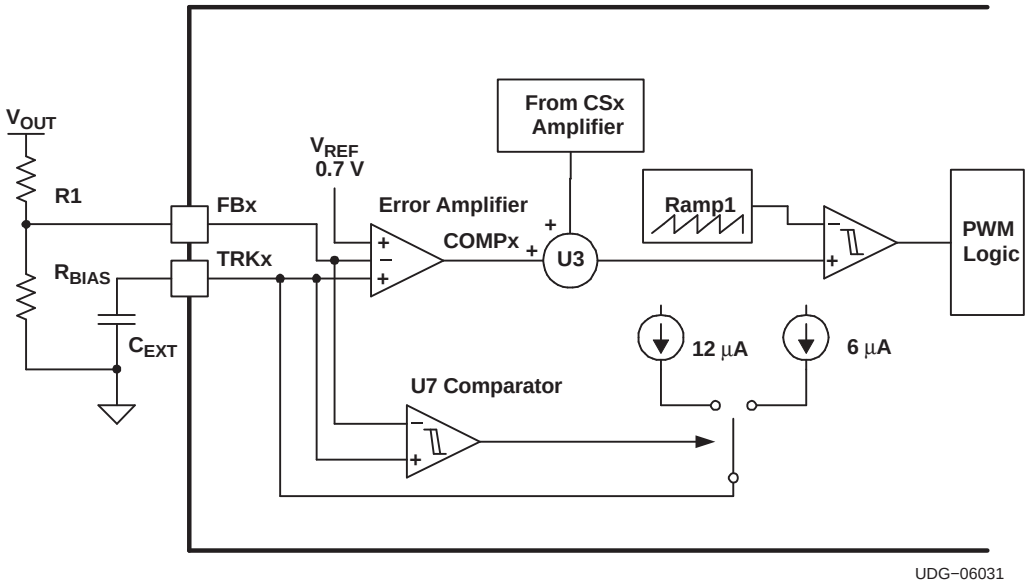

Figure 31. Implementation of PreBiased Output

DESIGN HINT

If the prebiased is greater than the regulation voltage, the controller does not start. This is a condition of an overvoltage being applied before the controller starts PWM switching.

9.1.8 Track Function in Configuring a Slave Channel

The TRKx pin is internally clamped to 2.4 V. To configure a channel as a slave, the TRKx pin is pulled up externally to 5 V. This configures the output of the error amplifier, COMPx, for that channel to be a high impedance, allowing the master COMP signal to control the slave channel.

Copyright © 2005–2015, Texas Instruments Incorporated

9.1.9 Differential Amplifier, U9

The unity gain differential amplifier has high bandwidth to achieve improved regulation at user defined point of load and ease layout constrains. The output voltage is sensed between the VOUT and GSNS pins. The output voltage programming divider is connected to the output of the amplifier, the DIFFO pin.

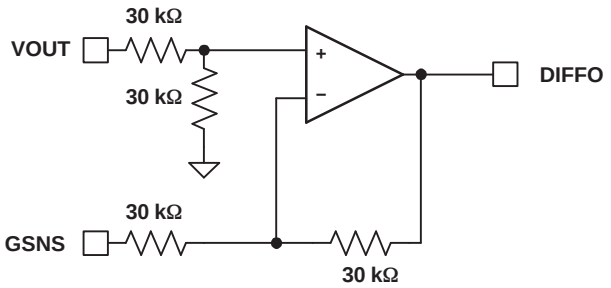

Figure 32. Differential Amplifier Configuration

DESIGN HINT

Because of the resistor configuration of the differential amplifier, the input impedance must be kept very low or errors result in setting the output voltage.

9.1.10 Setting the Output Voltage

Two resistors, R1 and R_{BIAS} sets the output voltage as shown in Figure 33.

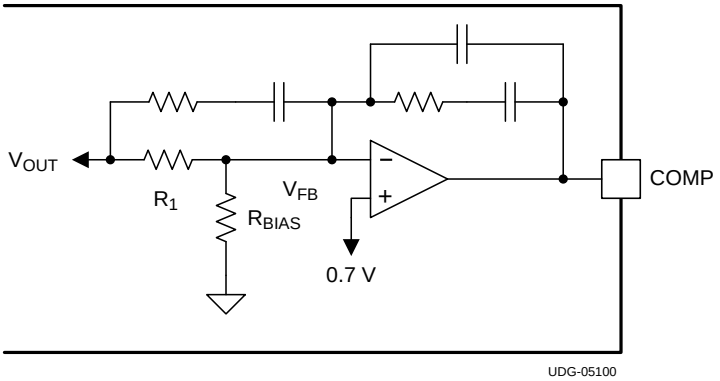

Figure 33. Setting the Output Voltage With R_{BIAS}

R_{BIAS} is calculated in Equation 6.

$$R_{BIAS} = 0.7 \times \left(\frac{R1}{\left(V_{OUT} - 0.7\right)} \right) \tag{6}$$

9.1.11 Programmable Input UVLO Protection

A voltage divider that sets 2 V on the UVLO_CEx pins determines when the controller begins to operate. The internal regulators are enabled when the voltage on the UVLO_CEx pins exceeds 1 V, but switching commences when the voltage is 2 V.

9.1.12 CLKFLT, CLKIO Pin Fault

If the CLKIO signal is to be distributed from the master to the slave controllers, and is not there, the slave controller enters a 'Standby' mode. The upper and lower MOSFETs are turned off but the internal 5-V regulator is still active and VREG is present. The CLKIO signal could be turned off at the master controller or the connection to the slave CLKIO input could be opened. If the CLKIO signal is restored, normal operation continues.

Copyright © 2005–2015, Texas Instruments Incorporated

9.1.13 PHSEL Pin Fault

The PHSEL pin is normally terminated with a resistor string, or tied directly to ground. If this string becomes open, the PHSEL pin voltage is pulled up internally to greater than 4 V. The controller enters a 'Standby' mode. The upper and lower MOSFETs are turned off but the internal 5-V regulator is still active and VREG is present. If the PHSEL connection is restored, normal operation continues after 64 PWM clock cycles.

9.1.14 Overtemperature

If the temperature of the controller die is detected to be above 155°C, the upper and lower MOSFETs are turned off and the 5-V regulator, VREG, is turned off. When the die temperature decreases 30°C the controller performs a normal start-up.

9.1.15 Fault Masking Operation

If the TRKx pin voltage is externally limited below the 1.4-V threshold, the controller does not respond to an Undervoltage fault and the PGOOD output remains low. Other fault modes remain operational. The overcurrent protection continues to terminate PWM cycle every time the threshold is exceeded, but the hiccup mode is not entered.

9.1.16 Setting the Switching Frequency

The clock frequency is programmed by the value of the timing resistor connected from the RT pin to ground. See Equation 7. This equation gives the frequency for an 8-phase system. For a 6-phase system the frequency is 1 1/3 times higher.

$$R = 1.33 \times \left(39.2 \times 10^3 \times f_{PH}^{-1.058} - 7\right)$$

where

- f_{PH} is a single-phase frequency, kHz
- The R_t resistor value is expressed in kΩ (7)

See Figure 34.

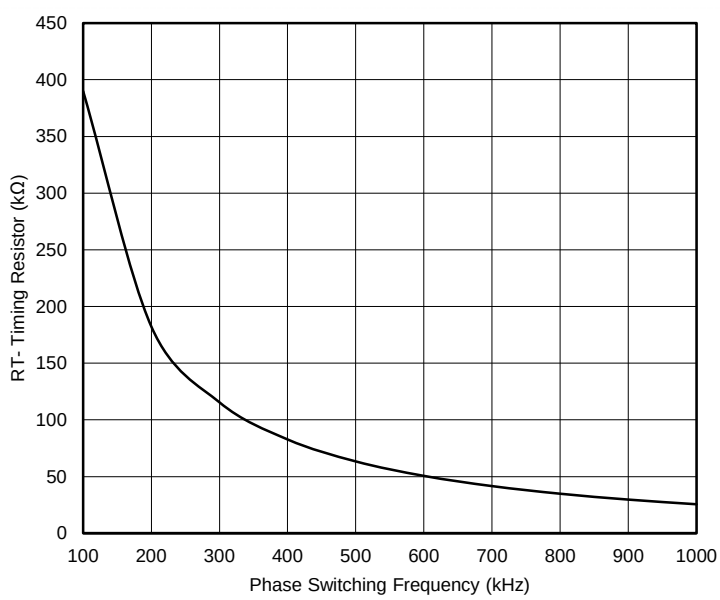

Figure 34. Phase Switching Frequency vs Timing Resistance

Copyright © 2005–2015, Texas Instruments Incorporated

9.1.17 Current Sense

Figure 35 shows the current sensing and overcurrent detection architecture.

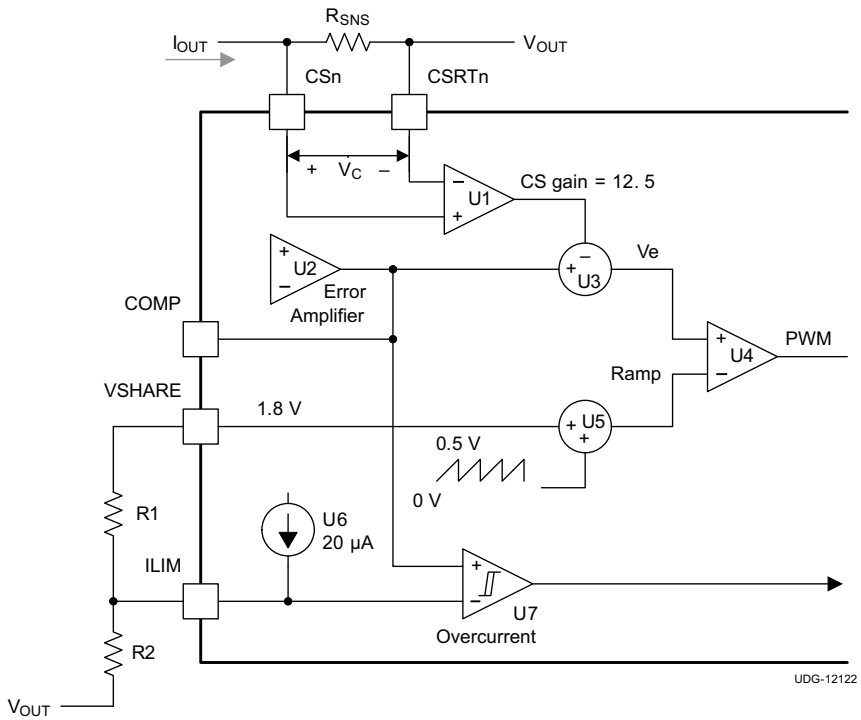

Figure 35. Output Current Sensing and Overcurrent Detection

The output current, I_{OUT}, flows through R_{SNS} and develops a voltage, V_C across it, representative of the output current. The voltage, V_C, could also be derived from an R-C network in parallel with the output inductor. This voltage is amplified with a gain of 12.5 and then subtracted from the Error Amp output, COMP, to generate the V_e voltage. The V_e signal is compared to the slope-compensation RAMP signal to generate the PWM for the modulator. As the output current is increased, the amplified V_C causes the V_e signal to decrease. In order to maintain the proper duty cycle (PWM), the COMP signal must increase. Therefore the magnitude of the COMP signal contains the output current information:

$$COMP = V_e + (I_{PEAK} \times R_{SNS}) \times 12.5 \tag{8}$$

This is integral in the overcurrent detection as can be seen at comparator U7, comparing the I_{LIM} voltage with COMP. In order to have the proper duty cycle at PWM, V_e is shown in Equation 9.

$$V_e = RAMP \times \frac{V_{OUT}}{V_{IN}} + V_{SHR} + \frac{RAMP}{2N_{ph}}$$

where

- N_{ph} is 6 if PHSEL voltage = 1.6 ± 0.2 V, otherwise N_{ph} is 8 (9)

Combining equations:

$$COMP = RAMP \times \frac{V_{OUT}}{V_{IN}} + V_{SHR} + \frac{RAMP}{2N_{ph}} + (I_{PEAK} \times R_{SNS}) \times 12.5 \tag{10}$$

Equation 10 shows the reason for resistors R1 and R2 being tied to V_{SHR} and V_{OUT}, respectively.

9.1.18 Current Sensing and Balancing

The controller employs peak current mode control scheme, thus naturally provides certain degree of current balancing. With current mode, the level of current feedback should comply with certain guidelines depending on duty factor known as “slope compensation” to avoid the sub-harmonic instability. This requirement can prohibit achieving a higher degree of phase current balance. To avoid the controversy, a separate current loop that forces phase currents to match is added to the proprietary control scheme. This effectively provides high degree of current sharing independent of the controller’s small signal response and is implemented in U3 and U22 in the *Functional Block Diagram* section.

High bandwidth current amplifiers, U2 and U21 can accept as an input voltage either the voltage drop across dedicated precise current sense resistors, or inductor’s DCR voltage derived by an RC network, or thermally compensated voltage derived from the inductor’s DCR. The wide range of current sense arrangements ease the cost/complexity constrains and provides superior performance compared to controllers utilizing the low-side MOSFET current sensing.

See the *Inductor DCR Current Sense* section for selecting the values of the RC network.

9.1.19 Overcurrent Detection and Hiccup Mode

To reduce the input current and component dissipation during on overcurrent event, a hiccup mode is implemented. Hiccup mode refers to a sequence of 7 soft-start cycles where no MOSFET switching occurs and then a restart is attempted. If the fault has cleared, the restart results in returning to normal operation and regulation. This is shown in Figure 36.

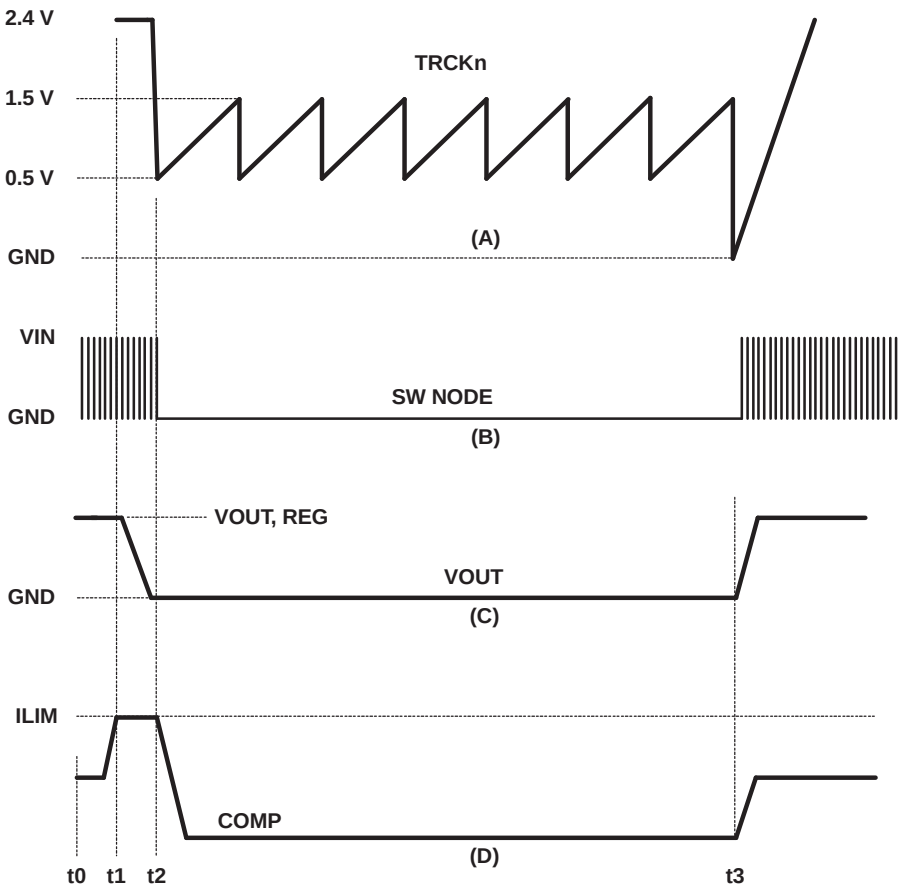

Figure 36. Hiccup Mode and Recovery

Copyright © 2005–2015, Texas Instruments Incorporated

In Figure 36, normal operation is occurring between t0 and t1 as shown by V_{OUT} being at the regulated voltage, (C) and normal switching on the SW NODE (B) and COMP at its nominal level, (D). At t1, an overcurrent load is experienced. The increased current forces COMP to increase to the ILIM level as shown in (D). If the COMP voltage is above the ILIM voltage for 7 switching cycles, the controller enters a hiccup mode. During this time the controller is not switching and the switching MOSFETs are turned off. The TRKx voltage goes through 7 cycles of charging and discharging the soft-start capacitor. At the end of the 7 cycles the controller attempts another normal restart. If the fault has been cleared, the output voltage comes up to the regulation level as shown at time t3. If the fault has not cleared, the COMP voltage again rises above the ILIM voltage and the hiccup mode repeats.

If the overcurrent condition exists for seven (7) PWM clock cycles the converter turns off the upper and lower MOSFETs and initiates a hiccup mode restart. In hiccup mode, the TRKx pin is periodically charged and discharged. After seven hiccup cycles, the controller attempts another soft-start cycle to restore normal operation. If the overload condition persists, the controller returns to the hiccup mode. This condition may continue indefinitely.

9.1.20 Calculating Overcurrent Protection Level

In order to set the desired overcurrent (I_{OC}), a few variables must be known. The input and output voltage, the output inductor value and it's DC resistance (DCR), as well as the switching frequency. Also known are the ramp voltage which is 0.5 V and the V_{SHARE} voltage, V_{SH} which is 1.8 V. See the list of variables and their values at the end of this section.

The overcurrent set point is in terms of the DC output current, but the current sense circuit monitors the peak of the current. Therefore, the current ripple is needed and is calculated from the values of:

- input voltage (V_{IN})
- output voltage (V_{OUT})
- switching frequency (f_{SW})
- output inductance (L)

The ripple current is given by Equation 11.

$$I_{RIPPLE} = \frac{(V_{IN} - V_{OUT})}{L} \times \frac{V_{OUT}}{V_{IN}} \times \frac{1}{f_{SW}} \tag{11}$$

Equation 12 calculates the detected peak current and is used in Equation 14.

$$I_{PEAK} = \left(\frac{I_{RIPPLE}}{2}\right) + I_{OC} \tag{12}$$

It is this I_{PEAK} current that is detected by the current sense circuit. The two resistors needed to set the peak overcurrent protection threshold and their connection for each channel is shown in Figure 37.

DESIGN HINT

Resistor R2 may be connected to the output voltage, V_{OUT}, or to the output of the differential amplifier, DIFFO, if used.

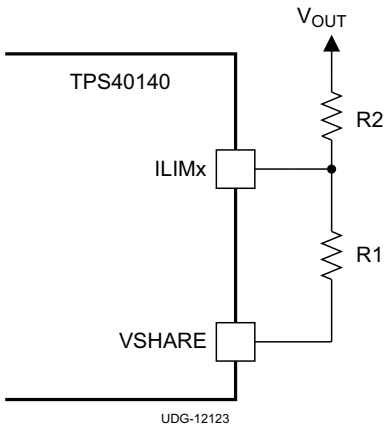

Figure 37. Selecting Overcurrent Threshold Resistors, R2 and R1

The two factors, alpha and beta help simplify the final equations and are given by Equation 13 and Equation 14.

$$\alpha = \frac{V_{RAMP}}{V_{IN}} \tag{13}$$

$$\beta = DCR \times A_C \times I_{PEAK} + \left(\frac{V_{RAMP}}{2 \times Nph}\right) \tag{14}$$

R1 is shown in Equation 15.

$$R1 = \frac{\beta + \alpha \times V_{SH}}{(1 - \alpha) \times I_{LIM}} \tag{15}$$

R2 is shown in Equation 16.

$$R2 = \frac{\beta + \alpha \times V_{SH}}{\alpha \times I_{LIM}}$$

where

- V_{RAMP} is the ramp amplitude (0.5 V typ)
- V_{IN} is the input voltage
- DCR is the inductor equivalent DC resistance
- A_C is the gain transfer to comparator
- I_{OC} is the single-phase DC overcurrent trip point
- I_{PEAK} is the peak single-phase inductor current
- N_{ph} is 6 if PHSEL voltage = 1.6 V ±0.2 V, otherwise N_{ph} = 8
- V_{SH} is the V_{SHARE} reference voltage (typ 1.8 V)
- I_{LIM} is the current limit, output current (typ 20 µA)
- Variable range is specified in the *Electrical Characteristics* table (16)

9.1.21 Design Examples Information

9.1.21.1 Inductor DCR Current Sense

The preferred method for sampling the output current for the TPS40140 is known as the *inductor DCR* method. This is a *lossless* approach, as opposed to using a discrete current sense resistor which occupies board area and impacts efficiency as well. The inductor DCR implementation is shown in Figure 38.

Copyright © 2005–2015, Texas Instruments Incorporated

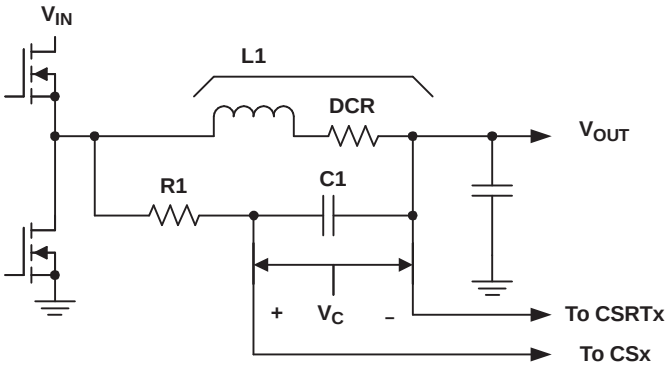

Figure 38. Inductor DCR Current Sense Approach

The inductor L1 consists of inductance, L, and resistance, DCR. The time constant of the inductor: L / DCR should equal the R1 × C1 time constant. Then choosing a value for C1 (0.1 µF is a good choice) solving for R1 is shown in Equation 17.

$$R1 = \frac{L1}{DCR \times C1} \tag{17}$$

The voltage into the current sense amplifier of the controller , V_C, is calculated in Equation 18.

$$V_C = \frac{1}{2} \times (V_{IN} - V_{OUT}) \times \frac{V_{OUT}}{R1 \times C1 \times f_{SW} \times V_{IN}} + I_{OC} \times DCR \tag{18}$$

As the DC load increases the majority of the voltage, V_C, is determined by (I_{OC} ×DCR), where I_{OC} is the per phase DC output current. It is important that at the overcurrent set point that the peak voltage of V_C does not exceed 60 mV, the maximum differential input voltage. If the voltage V_C exceeds 60 mV, a resistor, R2,can be added in parallel with C1 as shown in Figure 39. Adding R2 reduces the equivalent inductor DCR by the ratio shown in Equation 20

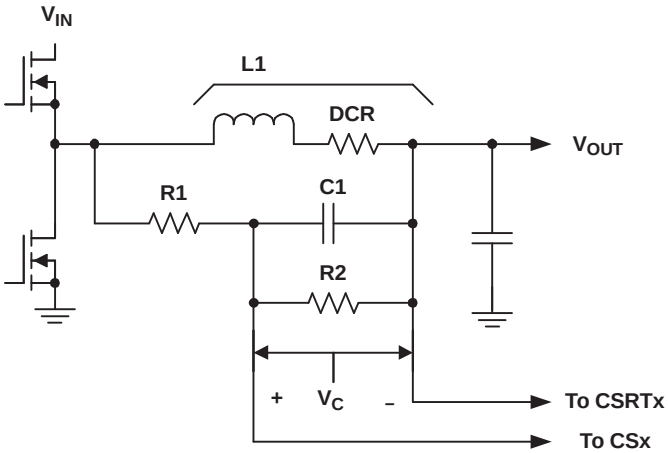

Figure 39. Using Resistor R2 to Reduce the Current Sense Amplifier Voltage

The parallel combination of R1 and R2 is shown in Equation 19.

$$R1 \| R2 = \frac{L1}{DCR \times C1} \tag{19}$$

The ratio shown in Equation 20 provides the required voltage attenuation.

$$\frac{R2}{R1 + R2} \tag{20}$$

9.2 Typical Application

9.2.1 Application 1: Dual-Output Configuration from 12 to 3.3 V and 1.5 V DC-DC Converter Using a TPS40140

Figure 40 shows the schematic of the dual output converter design.

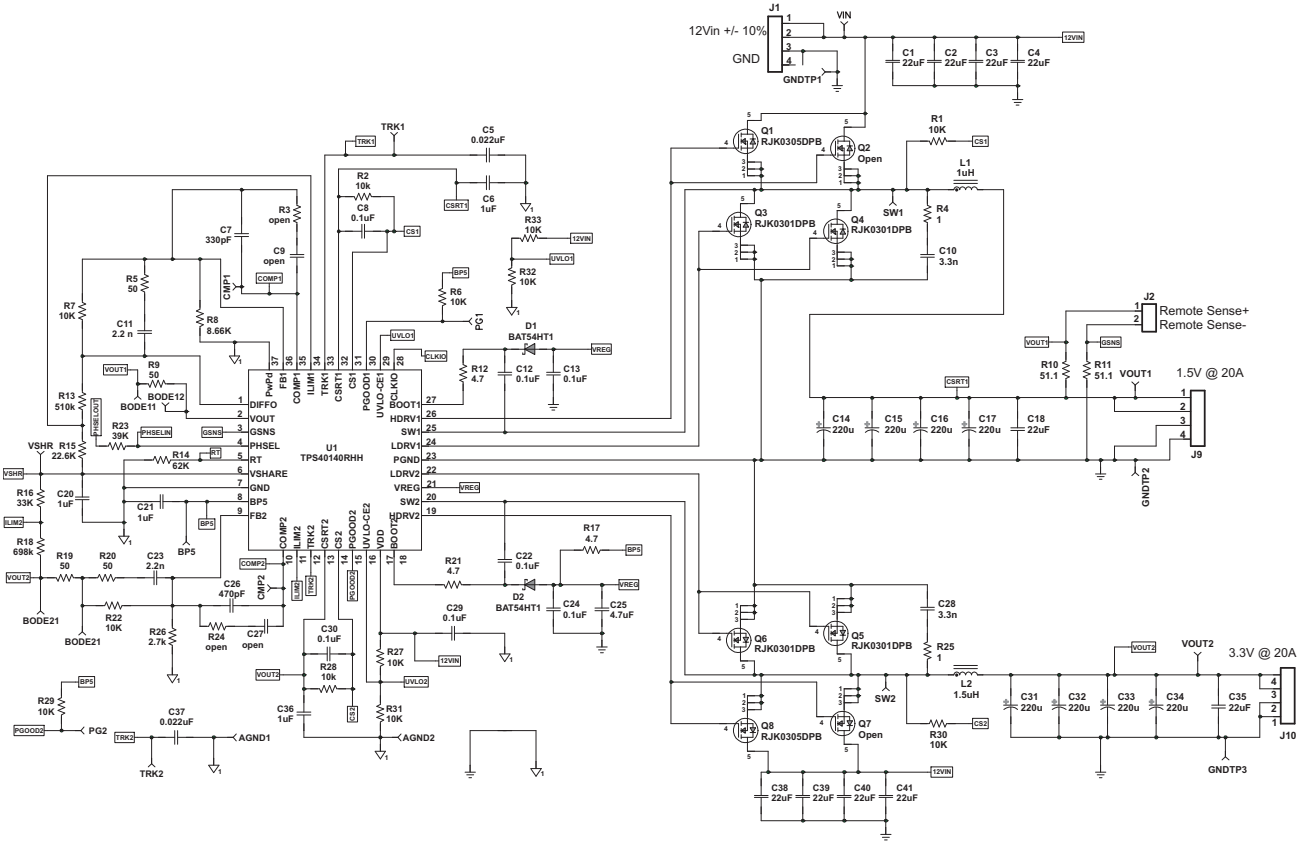

Figure 40. Dual-Output Converter Schematic

9.2.1.1 Design Requirements

The following example shows the design process and component selection for a dual output synchronous buck converter using TPS40140. Table 6 provides the design goal parameters. Only the calculated numbers for the 1.5-V output are shown, however, the equations are suitable for both channel design. A list of symbol definitions is found at the end of this section.

Table 6. Design Goal Parameters

PARAMETER		TEST CONDITION	MIN	TYP	MAX	UNIT
V_{IN}	Input voltage		10.8	12	13.2	V
$V_{IN(ripple)}$	Input ripple voltage	I_{OUT} = 20 A		0.15		V
V_{OUT}	Output voltage			1.5		V
	Line regulation	10.8 V ≤ V_{IN} ≤ 13.2 V			0.5%	
	Load regulation	0 V ≤ I_{OUT} ≤ 20 A			0.5%	
V_{P-P}	Output ripple voltage	I_{OUT} = 20 A		30		mV
ΔV_{OUT}	Output voltage deviation during load transient	ΔI_{OUT} = 10 A, V_{IN} = 12 V		80		mV
I_{OUT}	Output current	10.8 V ≤ V_{IN} ≤ 13.2 V	0		20	A
η	Efficiency	I_{OUT} = 20 A V_{IN} = 12 V		87%		
f_{SW}	Switching frequency			500		kHz

Copyright © 2005–2015, Texas Instruments Incorporated

9.2.1.2 Detailed Design Procedure

9.2.1.2.1 Step 1: Inductor Selection

The inductor is determined by the desired ripple current. The required inductor is calculated by:

$$L = \frac{V_{IN(max)} - V_{OUT}}{I_{RIPPLE}} \times \frac{V_{OUT}}{V_{IN(max)}} \times \frac{1}{f_{SW}} \tag{21}$$

Typically the peak-to-peak inductor current, I_{RIPPLE} is selected to be around 20% of the rated output current. In this design, I_{RIPPLE} is targeted at 15% of I_{OUT1}. The calculated inductor is 0.89 µH and in practical a 1-µH, 32-A, 1.7 mΩ inductor IHLP-5050FD from Vishay is selected. So, the inductor ripple current is 2.66 A.

9.2.1.2.2 Step 2: Output Capacitor Selection

The output capacitor is typically selected by the output load transient response requirement. Equation 22 estimates the minimum capacitor to reach the undervoltage requirement with load step up. Equation 23 estimates the minimum capacitor for overvoltage requirement with load step down. When $V_{IN(min)} < 2 \times V_{OUT}$, the minimum output capacitance can be calculated using Equation 22. Otherwise, Equation 23 is used.

$$C_{OUT}(MIN) = \frac{I^2_{TRAN(MAX)} \times L}{2 \times \left(V_{IN(min)} - V_{OUT}\right) \times V_{UNDER}} \tag{22}$$

when $V_{IN(min)} < 2 \times V_{OUT}$

$$C_{OUT}(MIN) = \frac{I^2_{TRAN(MAX)} \times L}{2 \times V_{OUT} \times V_{OVER}} \tag{23}$$

when $V_{IN(min)} > 2 \times V_{OUT}$

In this design, $V_{IN(min)}$ is much larger than $2 \times V_{OUT}$, so Equation 23 is used to determine the minimum capacitance. Based on a 10-A load transient with a maximum of 80-mV deviation, a minimum 417-µF output capacitor is required. In the design, four 220-µF, 4-V, SP capacitor are selected to meet this requirement. Each capacitor has an ESR of 5 mΩ.

Another criterion for capacitor selection is the output ripple voltage. The output ripple is determined mainly by the capacitance and the ESR.

$$ESR_{Co} = \frac{V_{RIPPLE(TotOUT)} - V_{RIPPLE(COUT)}}{I_{RIPPLE}} = \frac{V_{RIPPLE(TotOUT)} - \left(\frac{I_{RIPPLE}}{8 \times C_{OUT} \times f_{SW}}\right)}{I_{RIPPLE}} \tag{24}$$

With 880-µF output capacitance, the ripple voltage at the capacitor is calculated to be 0.76 mV. In the specification, the output ripple voltage should be less than 30 mV, so based on Equation 24, the required maximum ESR is 11 mΩ. The selected capacitors can meet this requirement.

9.2.1.2.3 Step 3: Input Capacitor Selection

The input voltage ripple depends on the input capacitance and the ESR. The minimum capacitor and the maximum ESR can be estimated by:

$$C_{IN(min)} = \frac{I_{OUT} \times \left(V_{IN} - V_{OUT}\right) \times V_{OUT}}{V_{RIPPLE(CIN)} \times f_{sw} \times V^2_{IN}} \tag{25}$$

$$ESR_{CIN} = \frac{V_{RIPPLE(CinESR)} \times V_{IN}}{\left(I_{OUT} + \frac{1}{2} I_{RIPPLE}\right) \times \left(V_{IN} - V_{OUT}\right)} \tag{26}$$

For this design, assume $V_{RIPPLE(CIN)}$ is 100 mV and $V_{RIPPLE(CinESR)}$ is 50 mV, so the calculated minimum capacitance is 43.6 µF and the maximum ESR is 2.7 mΩ. Choosing four 22-µF, 16-V, 2-mΩ ESR ceramic capacitors meets this requirement.

Another important consideration for the input capacitor is the RMS ripple current rating. The RMS current in the input capacitor is estimated by:

$$I_{RMS_CIN} = \sqrt{D \times (1 - D)} \times I_{OUT} \tag{27}$$

D is the duty cycle. The calculated RMS current is 6.6 A. Each selected ceramic capacitor has a RMS current rating of 4.3 A, so it is sufficient to reach this requirement.

9.2.1.2.4 Step 4: MOSFET Selection

The MOSFET selection determines the converter efficiency. In this design, the duty cycle is very small so that the high-side MOSFET is dominated with switching losses and the low-side MOSFET is dominated with conduction loss. To optimize the efficiency, choose smaller gate charge for the high-side MOSFET and smaller $R_{DS(on)}$ for the low-side MOSFET.

The RENESAS RJK0305 and RJK0301 are selected as the high-side and low-side MOSFETs respectively. To reduce the conduction loss, two RJK0301 components are used.

The power losses in the high-side MOSFET is calculated with the following equations:

The RMS current in the high side MOSFET is show in Equation 28.

$$I_{SWrms} = \sqrt{D \times \left(I_{OUT}^{2} + \frac{I_{RIPPLE}^{2}}{12} \right)} = 7.07\ A \tag{28}$$

The $R_{DS(on)}$ is 13 mΩ when the MOSFET gate voltage is 4.5 V.

The conduction loss is:

$$P_{SWcond} = \left(I_{SWrms}\right)^{2} \times R_{DS(on)}\,(sw) = 0.65\ W \tag{29}$$

The switching loss is:

$$Psw_{sw} = \frac{Ipk \times Vin \times f_{sw} \times R_{drv} \times (Qgd_{sw} + Qgs_{sw})}{Vgtdrv} = 0.26\ W \tag{30}$$

The calculated total loss in the high-side MOSFET is:

$$P_{SWtot} = P_{SWcond} + P_{SWsw} = 0.91\ W \tag{31}$$

The power losses in the low-side SR MOSFET is calculated in the following equations:

The RMS current in the low-side MOSFET is shown in Equation 32.

$$I_{SRrms} = \sqrt{(1 - D) \times \left(I_{OUT}^{2} + \frac{I_{RIPPLE}^{2}}{12} \right)} = 18.7\ A \tag{32}$$

The $R_{DS(on)}$ is 4 mΩ when the MOSFET gate voltage is 4.5 V.

The total conduction loss in the two low-side MOSFETs is shown in Equation 33.

$$P_{SRcond} = \left(I_{SRrms}\right)^{2} \times \frac{R_{DS(on)}\,(sr)}{N} = 0.7\ W$$

where

- N is the number of MOSFETs. Here, it is equal to 2. (33)

The total power loss in the body diode is:

$$P_{diode} = 2 \times I_{OUT} \times t_{d} \times V_{f} \times f_{sw} = 0.77\ W \tag{34}$$

So the calculated total loss in the SR MOSFET is:

Copyright © 2005–2015, Texas Instruments Incorporated

$$P_{SRtot} = P_{SRcond} + P_{DIODE} = 1.47\ W \tag{35}$$

9.2.1.2.5 Step 5: Peripheral Component Design

9.2.1.2.5.1 Switching Frequency Setting (RT Pin 5)

$$R = 1.33 \times \left(39.2 \times 10^3 \times f_{PH}^{-1.058} - 7\right) \tag{36}$$

In the design, a 62-kΩ resistor is selected. The actual switching frequency is 510 kHz.

9.2.1.2.5.2 Output Voltage Setting (FB1 Pin 36)

Substitute R1 with 10 kΩ and then calculate R_{BIAS}.

$$R_{BIAS} = 0.7 \times \frac{R1}{V_{OUT} - 0.7} = 8.75\ k\Omega \tag{37}$$

9.2.1.2.5.3 Current Sensing Network Design (CS1 Pin 31 and CSRT1 Pin 32)

For small pulse width, to avoid the sub-harmonics brought by the loop delay, a resistor divider is usually used to attenuate the current feedback information as described in the *Inductor DCR Current Sense* section.

Choosing C1 a value for 0.1-µF, and let R1 and R2 be equal, calculating R1 and R2 with Equation 38 and Equation 39. In this design, R1 and R2 are 10 kΩ.

$$R1//R2 = \frac{L}{DCR \times C1} = 5.8\ k\Omega \tag{38}$$

$$R1 = R2 = 11.6\ k\Omega \tag{39}$$

A simplified equation to determine if the design produces sub-harmonics is shown in Equation 40.

$$\frac{L}{DCR_{(eqv)}} > \frac{V_{IN} \times Ac}{2 \times V_{ramp} \times f_{sw}} \tag{40}$$

$$DCR_{(eqv)} = \frac{R2}{R1 + R2} \times DCR = \frac{DCR}{2} \tag{41}$$

In this design, a 1-µF capacitor is placed at the CSRT1 pin for the purpose of eliminating noise. It can be removed without degrading performance.

9.2.1.2.5.4 Overcurrent Protection (ILIM1 Pin 34)

The resistor selection equations in the **CALCULATING OVERCURRENT PROTECTION LEVEL** section are simplified to calculate the over current setting resistors. Set the DC over current rating at 30 A.

$$R1 = \frac{DCR_{eqv} \times Ac \times I_{PK} + \frac{V_{RAMP}}{2 \times N_{PH}} + \frac{V_{RAMP}}{V_{IN}} \times V_{SH}}{\left(1 - \frac{V_{RAMP}}{V_{IN}}\right) \times I_{LIM}} = 22.5\,k\Omega$$

$$R2 = \frac{DCR_{eqv} \times Ac \times I_{PK} + \frac{V_{RAMP}}{2 \times N_{PH}} + \frac{V_{RAMP}}{V_{IN}} \times V_{SH}}{\frac{V_{RAMP}}{V_{IN}} \times I_{LIM}} = 510\,k\Omega \tag{42}$$

where

- A_C is the gain transfer to comparator (typ 12.5)
- V_{RAMP} is the ramp amplitude (typ 0.5 V)
- V_{SH} is the V_{SHARE} reference voltage (typ 1.8 V)
- I_{LIM} is the current limit output current (typ 20 µA)
- N_{PH} is 6 if V_{PHSEL} = 1.6 V ±0.2 V, otherwise N_{PH} = 8 (43)

9.2.1.2.5.5 VREG (Pin 21)

A 4.7-µF capacitor is connected to VREG pin to filter noise.

9.2.1.2.5.6 BP5 (Pin 8)

A 4.7-Ω and 1-µF capacitor is placed between VREG and BP5.

9.2.1.2.5.7 PHSEL (Pin 4)

For this dual output configuration, the PHSEL pin is directly tied to GND. The channel 1 and channel 2 has a 180° phase shift.

9.2.1.2.5.8 VSHARE (Pin 6)

A 1-µF capacitor is tied from VSHARE pin to GND.

9.2.1.2.5.9 PGOOD1 (Pin 30)

The PGOOD1 pin is tied to BP5 with a 10-kΩ resistor.

9.2.1.2.5.10 UVLO_CE1 (Pin 29)

It is connected to the input voltage with a resistor divider. The two resistors have the same value of 10-kΩ. When the input voltage is higher than 2 V, the chip is enabled.

9.2.1.2.5.11 Clkio (Pin 28)

CLKIO is floating as no clock synchronization required for dual output configuration.

9.2.1.2.5.12 BOOT1 and SW1 (Pin 27 and 25)

A bootstrap capacitor is connected between the BOOT1 and SW1 pin. The bootstrap capacitor depends on the total gate charge of the high side MOSFET and the amount of droop allowed on the bootstrap capacitor.

$$C_{boot} = \frac{Qg}{\Delta V} = \frac{8nc}{0.5V} = 16\,nF \tag{44}$$

For this application, a 0.1-µF capacitor is selected.

9.2.1.2.5.13 TRK1 (Pin 33)

A 22-nF capacitor is tied to TRK1 pin to provide 1.28-ms of soft-start time.

$$t_{SS} = C_{SS} \times 58 \times 10^3 = \left(22 \times 10^{-9}\right) \times 58 \times 10^3 = 1.28\,ms \tag{45}$$

9.2.1.2.5.14 DIFFO, VOUT, and GSNS (Pin 1, Pin 2, and Pin 3)

VOUT and GSNS are connected to the remote sensing output connector. DIFFO is connected to the feedback resistor divider. If the differential amplifier is not used, VOUT and GSNS are suggested to be grounded, and DIFFO is left open.

9.2.1.2.6 Feedback Compensator Design (COMP1 Pin 35)

Peak current mode control method is employed in the controller. A small signal model is developed from the COMP signal to the output.

$$Gvc(s) = \frac{1}{DCR \times Ac} \times \frac{1}{s \times \tau_s + 1} \times \frac{(s \times C_{OUT} \times ESR + 1) \times R_{OUT}}{s \times C_{OUT} \times (ESR + R_{OUT}) + 1} \tag{46}$$

The time constant is defined by:

Copyright © 2005–2015, Texas Instruments Incorporated

$$t_S = \frac{t}{\ln\left(\frac{\left(\left(\frac{V_{RAMP}}{t}\right) - \left(\frac{V_{OUT}}{L}\right) \times DCR \times Ac\right)}{\left(\frac{V_{RAMP}}{t}\right) - \left(\frac{V_{IN} - V_{OUT}}{L}\right) \times DCR \times Ac - \frac{2 \times V_{OUT}}{L} \times DCR \times Ac}\right)} \tag{47}$$

The low-frequency pole is calculated by:

$$f_{VCP1} = \frac{1}{2 \times \pi \times C_{OUT} \times (ESR + R_{OUT})} = 2.36\ kHz \tag{48}$$

The ESR zero is calculated by:

$$f_{ESR} = \frac{1}{2 \times \pi \times C_{OUT} \times ESR} = 144.7\ kHz \tag{49}$$

In this design, a Type II compensator is employed to compensate the loop.

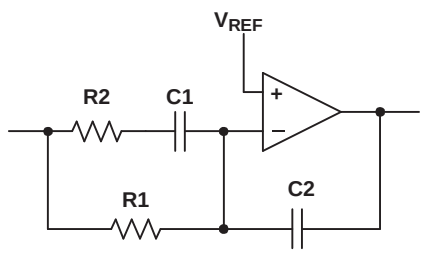

Figure 41. Type II Compensator

The compensator transfer function is:

$$Gc(s) = \frac{1}{R1 \times C2} \times \frac{s \times (R1 + R2) \times C1 + 1}{s \times (s \times R2 \times C1 + 1)} \tag{50}$$

The loop gain transfer function is:

$$Tv(s) = Gc(s) \times Gvc(s) \tag{51}$$

Assume the desired crossover frequency is 60 kHz, then set the compensator zero about 1/10 of the crossover frequency and the compensator pole equal to the ESR zero. The compensator gain is then calculated to achieve the desired bandwidth. In this design, the compensator gain, pole and zero are selected as following:

$$f_p = \frac{1}{2 \times \pi \times R2 \times C1} = 174.9\ kHz \tag{52}$$

$$f_z = \frac{1}{2 \times \pi \times (R1 + R2) \times C1} = 5.91\ kHz \tag{53}$$

$$\left|Tv\ (j \times 2 \times \pi \times fc)\right| = 1 \tag{54}$$

The compensator gain is solved as 400.

$$A_{CM} = \frac{1}{R1 \times C2} = 400$$

where

- C1 = 2.6 nF
- C2 = 250 pF
- R2 = 350 Ω
- Set R1 equal to 10-kΩ, and then calculate all the other components (55)

In the real laboratory practice, the final components are selected as following to increase the phase margin and reduce PWM jitter.

- R1 = 10 kΩ
- C2 = 330 pF
- R2 = 50 Ω
- C1 = 2.2 nF

9.2.1.3 Application Curves

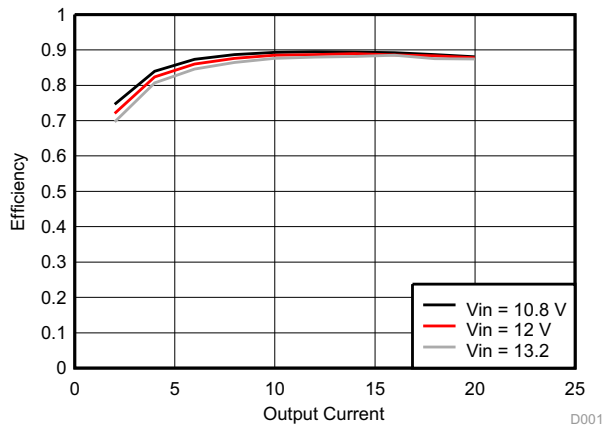

Figure 42. Efficiency vs Output Current

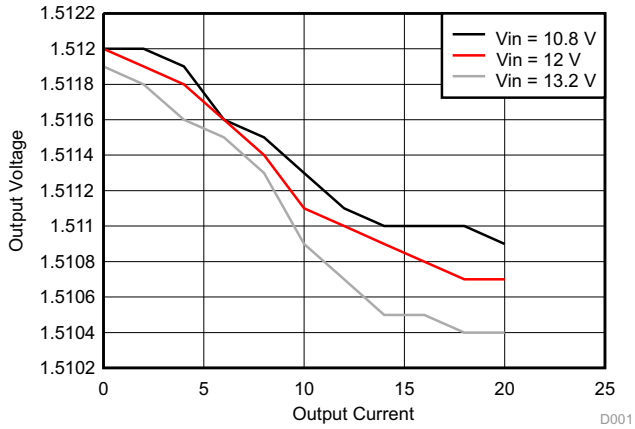

Figure 43. Load Regulation

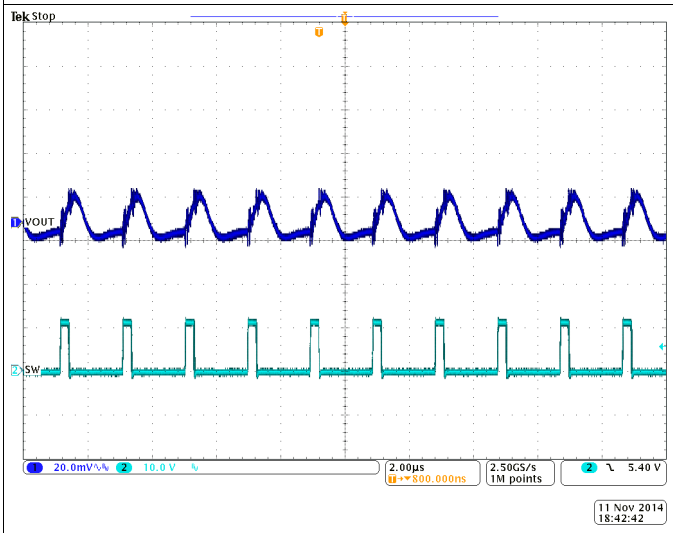

V_{IN} = 12 V V_{OUT} = 1.5 V I_{OUT} = 20A

Figure 44. Output Voltage Ripple

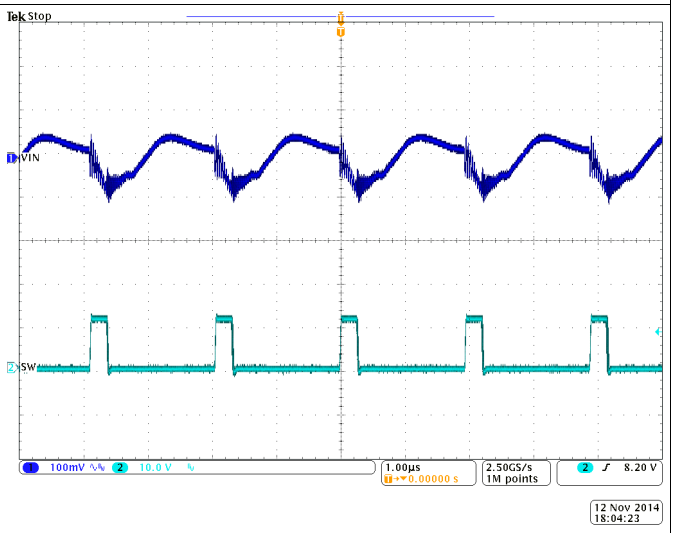

V_{IN} = 12 V V_{OUT} = 1.5 V I_{OUT} = 20A

Figure 45. Input Voltage Ripple

Copyright © 2005–2015, Texas Instruments Incorporated

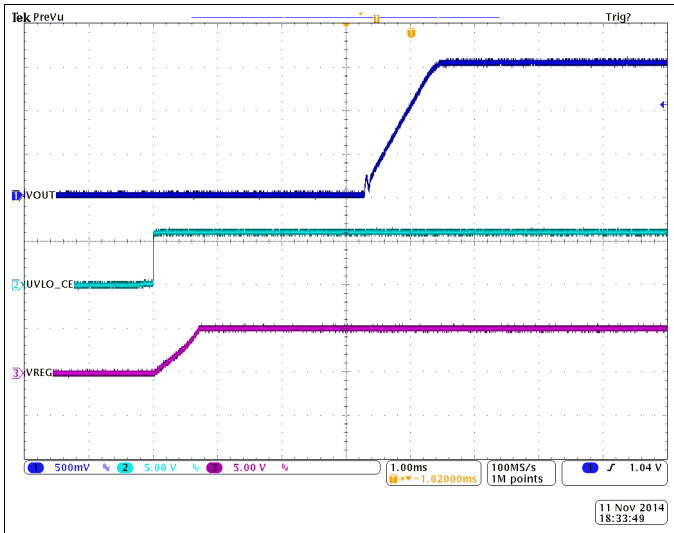

V_{IN} = 12 V V_{OUT} = 1.5 V I_{OUT} = 0A

Figure 46. Start-up from UVLO_CE

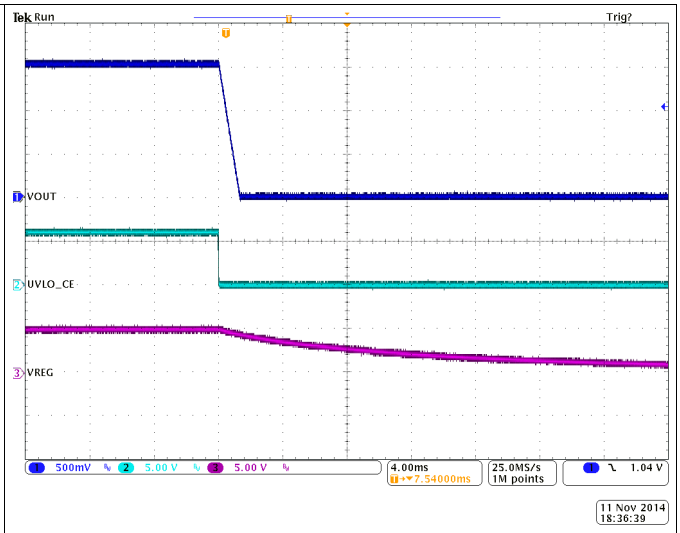

V_{IN} = 12 V V_{OUT} = 1.5 V I_{OUT} = 1A

Figure 47. Shutdown from UVLO_CE

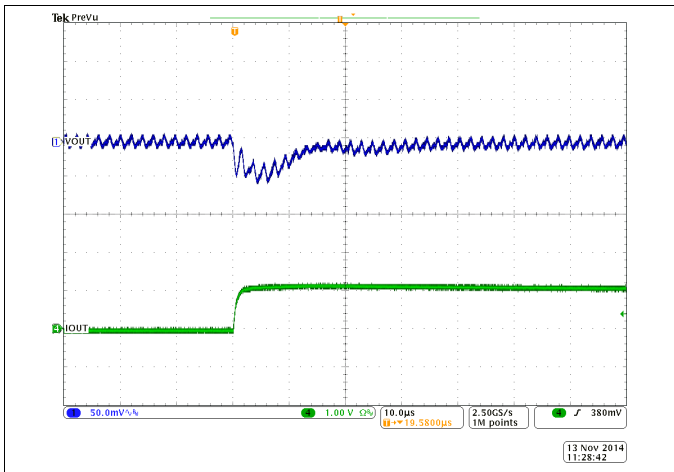

V_{IN} = 12 V V_{OUT} = 1.5 V

Figure 48. Load Step 0 A to 10 A, 5 A/us

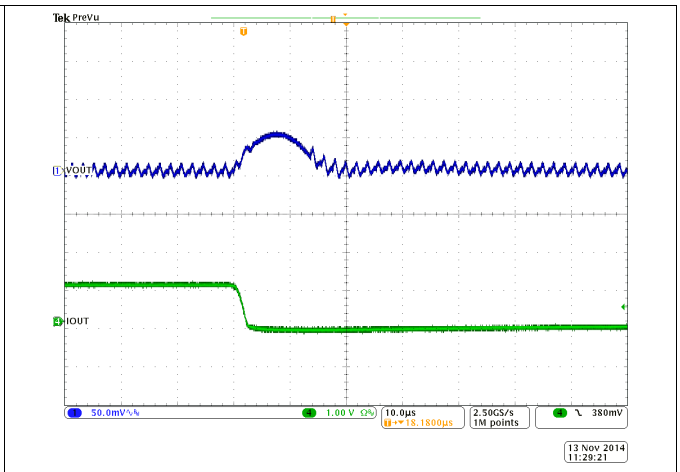

V_{IN} = 12 V V_{OUT} = 1.5 V

Figure 49. Load Step 10 A to 0 A, 5 A/us

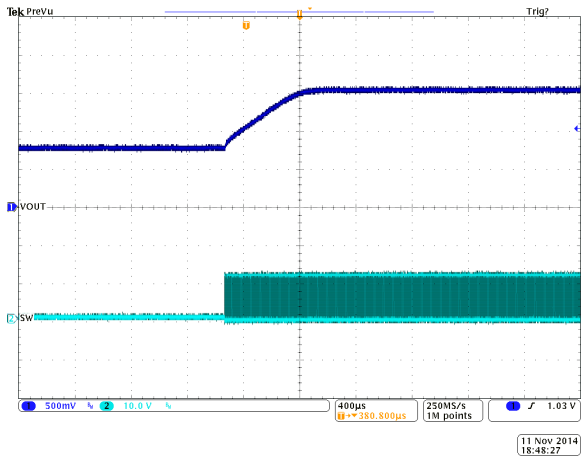

V_{IN} = 12 V V_{OUT} = 1.5 V

Figure 50. Prebias Sequence

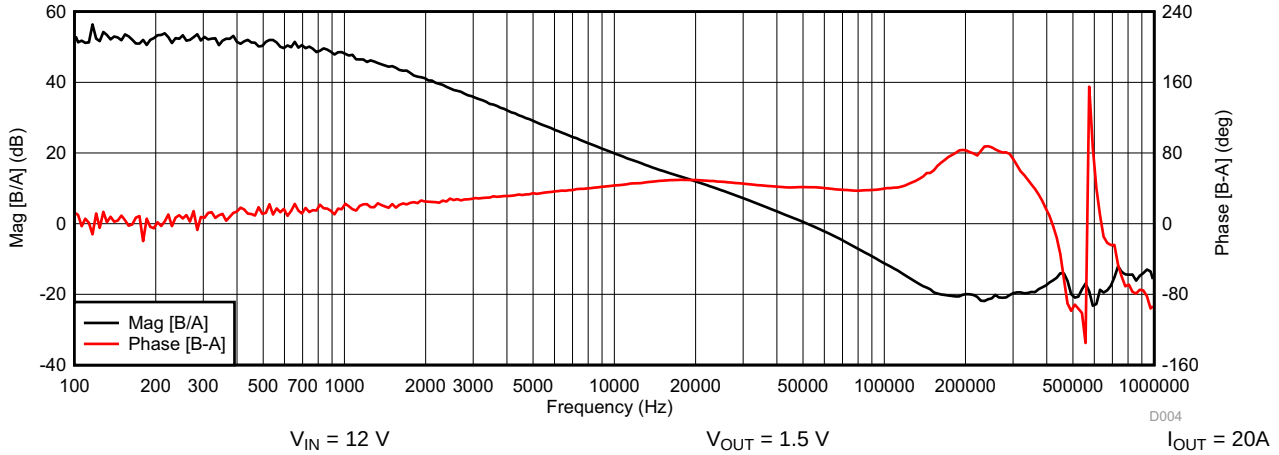

V_{IN} = 12 V V_{OUT} = 1.5 V I_{OUT} = 20A

Figure 51. Bode Plot

Copyright © 2005–2015, Texas Instruments Incorporated

9.2.2 Application 2: Two-Phase Single Output Configuration from 12 to 1.5 V DC-DC Converter Using a TPS40140

The following example illustrates the design process and component selection for a two-phase single output synchronous buck converter using TPS40140. The design goal parameters are given in Table 7. The inductor and MOSFET selection equations are quite similar to the dual output converter design, so they are not repeated here.

Figure 52 shows the schematic of the two phase single output converter design.

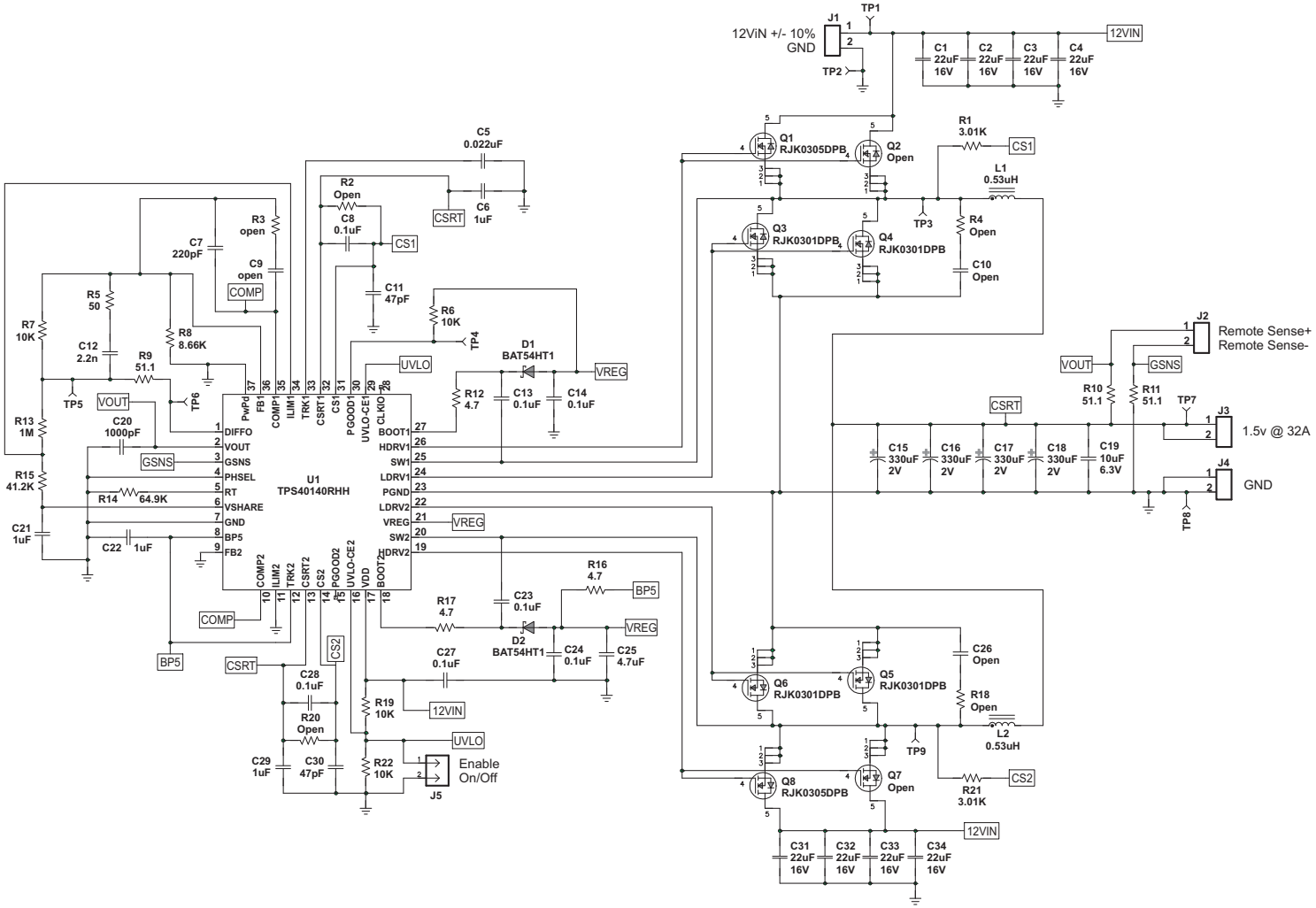

Figure 52. Two-Phase Single Output Converter Schematic

9.2.2.1 Design Requirements

Table 7. Design Goal Parameters

PARAMETER		TEST CONDITION	MIN	TYP	MAX	UNIT
V_{IN}	Input voltage		10.8	12	13.2	V
$V_{IN(ripple)}$	Input ripple voltage	I_{OUT} = 32 A		0.15		V
V_{OUT}	Output voltage			1.5		V
	Line regulation	10.8 V ≤ V_{IN} ≤ 13.2 V			0.5%	
	Load regulation	0 V ≤ I_{OUT} ≤ 32 A			0.5%	
V_{P-P}	Output ripple voltage	I_{OUT} = 32 A		30		mV
ΔV_{OUT}	Output voltage deviation during load transient	ΔI_{OUT} = 15 A, V_{IN} = 12 V		50		mV
I_{OUT}	Output current	10.8 V ≤ V_{IN} ≤ 13.2 V	0		32	A
η	Efficiency	I_{OUT} = 32 A V_{IN} = 12 V		87%		
f_{SW}	Switching frequency			500		kHz

9.2.2.2 Detailed Design Procedure

9.2.2.2.1 Step 1: Output Capacitor Selection

The output capacitor is typically selected by the output load transient response requirement. Equation 23 in the dual output design example is used. The inductor L in the equation is equal to the phase inductance divided by number of phases.

Based on a 15-A load transient with a maximum of 50 mV deviation, a minimum 795-µF output capacitor is required. In the design, four 330-µF, 2 V, SP capacitor are selected to meet this requirement. Each capacitor has an ESR of 6 mΩ.

Another criterion for capacitor selection is the output ripple voltage that is determined mainly by the capacitance and the ESR.

Due to the interleaving of channels, the total output ripple current is smaller than the ripple current from a single phase. The ripple cancellation factor is expressed in Equation 56.

$$I_{RIP_NORN} = \frac{N_{PH} \times (D - \frac{m}{N_{PH}}) \times (\frac{m+1}{N_{PH}} - D)}{D \times (1 - D)}$$

where

- D is the duty cycle for a single phase
- N_{PH} is the number of active phases, here it is equal to 2
- m = floor (N_{PH} × D) is the maximum integer that does not exceed the (N_{PH} × D), here m is 0 (56)

The output ripple current is then calculated in Equation 57. The maximum output ripple current is 4.3 A with maximum input voltage.

$$I_{RIPPLE} = \frac{V_{OUT} \times (1 - D)}{L \times f_{SW}} \times I_{RIP_NORM} \quad (57)$$

With 1.32 mF output capacitance, the ripple voltage at the capacitor is calculated to be 0.82 mV. In the specification, the output ripple voltage should be less than 30 mV, so based on Equation 24, the required maximum ESR is 6.7 mΩ. The selected capacitors can meet this requirement.

9.2.2.2.2 Step 2: Input Capacitor Selection

The input voltage ripple depends on the input capacitance and the ESR. The minimum capacitor and the maximum ESR can be estimated by Equation 25 and Equation 26 in the dual output design example. The phase current should be used in the calculation.

For this design, $V_{RIPPLE(CIN)}$ assume is 100mV and $V_{RIPPLE(CinESR)}$ is 50 mV, so the calculated minimum capacitance is 40 µF and the maximum ESR is 2.7 mΩ. Choosing four 22-µF, 16-V, 2-mΩ ESR ceramic capacitors meet this requirement.

Copyright © 2005–2015, Texas Instruments Incorporated

Another important consideration for the input capacitor is the RMS ripple current rating. Due to the interleaving of multi-phase, the input RMS current is reduced. The input ripple current RMS value over load current is calculated in Equation 58.

$$I_{IN_NORM} = \sqrt{\left(D - \frac{m}{N_{PH}}\right) \times \left(\frac{m+1}{N_{PH}} - D\right) + \frac{N_{PH}}{12 \times D^2}\left[\frac{V_{OUT} \times (1-D)}{L \times f_{SW} \times I_{OUT}}\right]^2 \times (m+1)^2 \times \left(D - \frac{m}{N_{PH}}\right)^3 + m^2 \times \left(\frac{m+1}{N_{PH}} - D\right)^3}$$

where

- D is the duty cycle for a single phase
- N_{PH} is the number of active phases, here it is equal to 2
- m = floor (N_{PH} × D) is the maximum integer that does not exceed the (N_{PH} × D), here m is 0 (58)

The input ripple RMS current is calculated in Equation 59. In this design, the maximum I_{IN_NORM} is calculated to be 0.225 with the minimum input voltage, and the maximum input ripple RMS current is 7.2 A. Each selected ceramic capacitor has a RMS current rating of 4.3 A, therefore, sufficient to reach this requirement.

$$I_{RMS_CIN} = I_{IN_NORM} \times I_{OUT} \quad (59)$$

9.2.2.2.3 Step 3: Peripheral Component Design

9.2.2.2.3.1 Switching Frequency Setting (Rt Pin 5)

$$R_{RT} = 1.33 \times (39.2 \times 10^3 \times (f_{SW})^{-1.058} - 7) = 71.5\ k\Omega$$

where

- f_{sw} represents the phase switching frequency (60)

In the design, a 64.9-kΩ resistor is selected. The actual switching frequency is 490 kHz.

9.2.2.2.3.2 COMP1 and COMP2 (Pin 35 and Pin 10)

COMP1 is connected to the compensator network. The selection of compensation components is similar to the dual output design example.

COMP2 is directly tied to COMP1.

9.2.2.2.3.3 TRK1 and TRK2 (Pin 33 and Pin 12)

A soft start capacitor is connected between TRK1 and GND. TRK2 is directly tied to BP5 to set this channel as a slave

9.2.2.2.3.4 ILIM1 and ILIM2 (Pin 34 and Pin 11)

ILIM1 is connected to the resistor network that has the same design as the dual output example. The peak current in Equation 42 and Equation 43 is the peak current of each phase.

ILIM2 is connected to GND.

9.2.2.2.3.5 FB1 and FB2 (Pin 36 and Pin 9)

FB1 is tied to the feedback network. FB2 is connected to GND.

9.2.2.2.3.6 PHSEL (Pin 4)

For this two phase configuration, the PHSEL pin is directly tied to GND.

9.2.2.2.3.7 PGOOD1 and PGOOD2 (Pin 30 and Pin 15)

Both of PGOOD1 and PGOOD2 are tied to BP5 with a 10-kΩ resistor.

9.2.2.2.3.8 CLKIO (Pin 28)

CLKIO is open as no clock synchronization required for two phase configuration.

Copyright © 2005–2015, Texas Instruments Incorporated

9.2.2.2.3.9 DIFFO, VOUT, and GSNS (Pin 1, Pin 2, and Pin 3)

VOUT and GSNS should be connected to the remote sensing output connector. DIFFO is connected to the feedback resistor divider. If the differential amplifier is not used, VOUT and GSNS are suggested to be grounded, and DIFFO is left open.

9.2.3 Application Curves

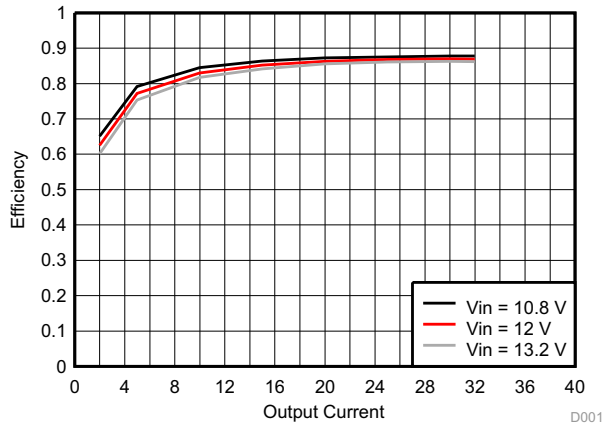

Figure 53. Efficiency vs Output Current

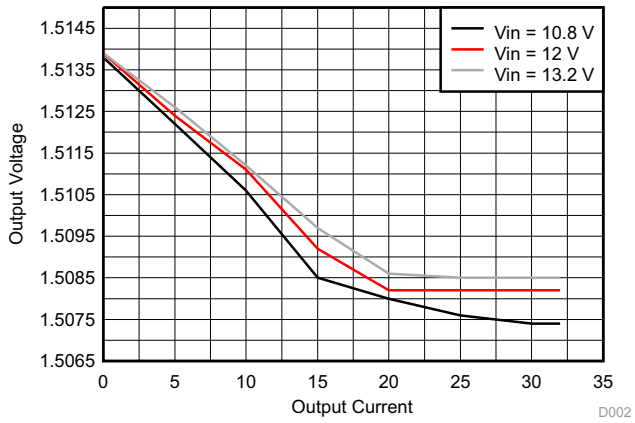

Figure 54. Load Regulation

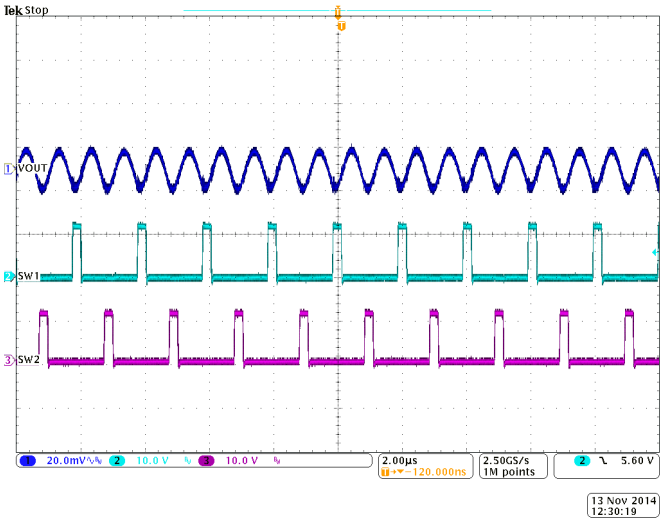

V_{IN} = 12 V V_{OUT} = 1.5 V I_{OUT} = 32A

Figure 55. Output Voltage Ripple

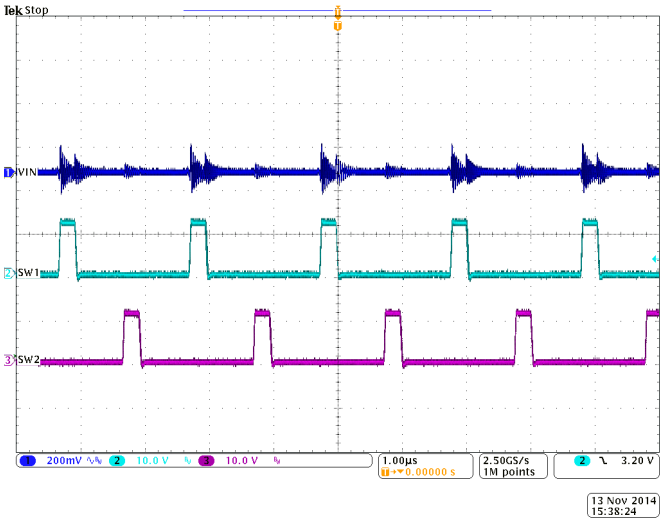

V_{IN} = 12 V V_{OUT} = 1.5 V I_{OUT} = 32A

Figure 56. Input Voltage Ripple

Copyright © 2005–2015, Texas Instruments Incorporated

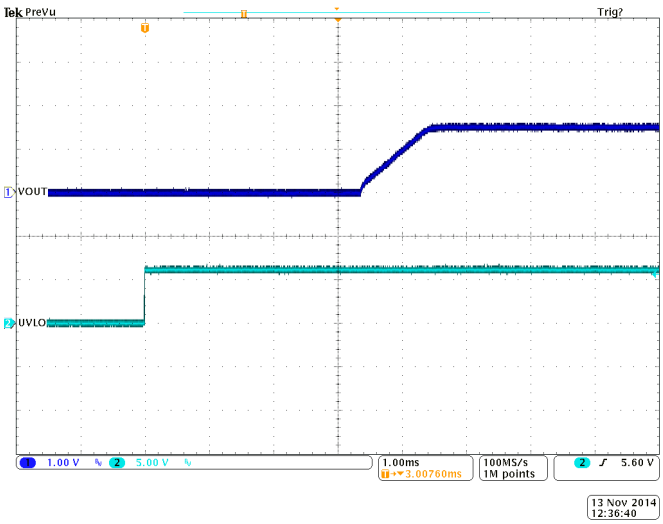

V_{IN} = 12 V V_{OUT} = 1.5 V I_{OUT} = 0A

Figure 57. Start-up from UVLO_CE

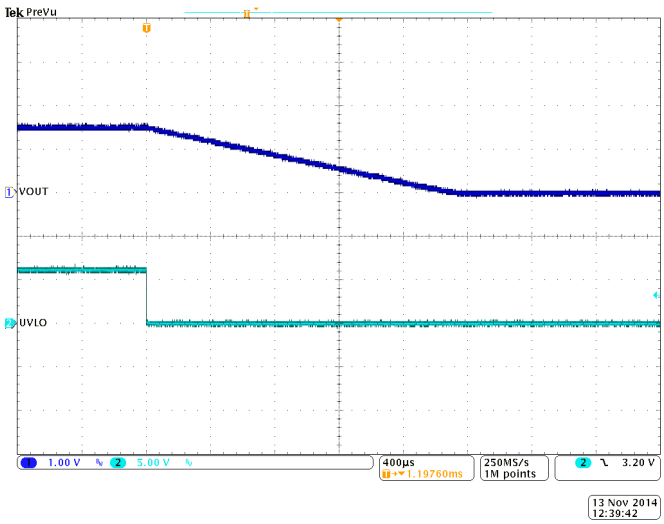

V_{IN} = 12 V V_{OUT} = 1.5 V I_{OUT} = 1A

Figure 58. Shutdown from UVLO_CE

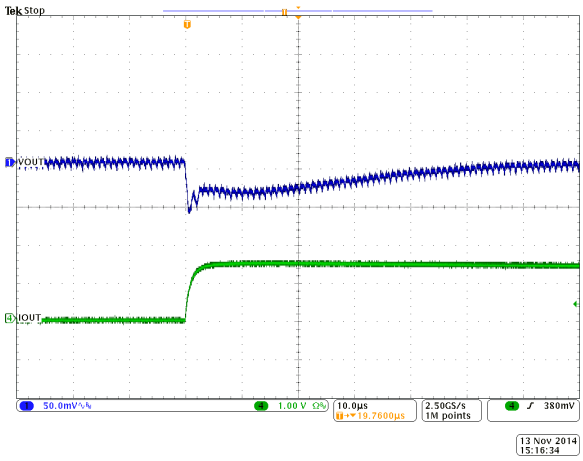

V_{IN} = 12 V V_{OUT} = 1.5 V

Figure 59. Load Step 0 A to 15 A, 5 A/us

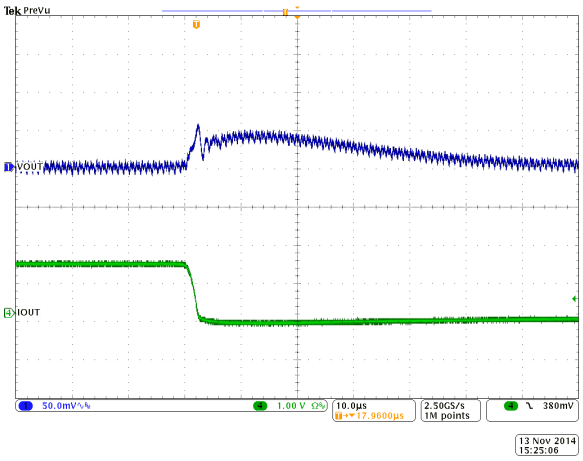

V_{IN} = 12 V V_{OUT} = 1.5 V

Figure 60. Load Step 15 A to 0 A, 5 A/us

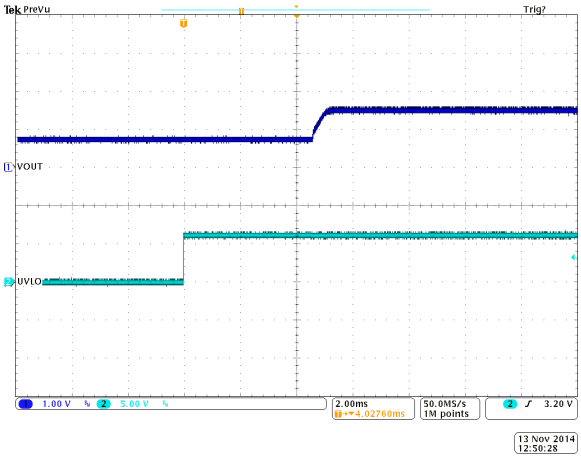

V_{IN} = 12 V V_{OUT} = 1.5 V

Figure 61. Prebias Sequence

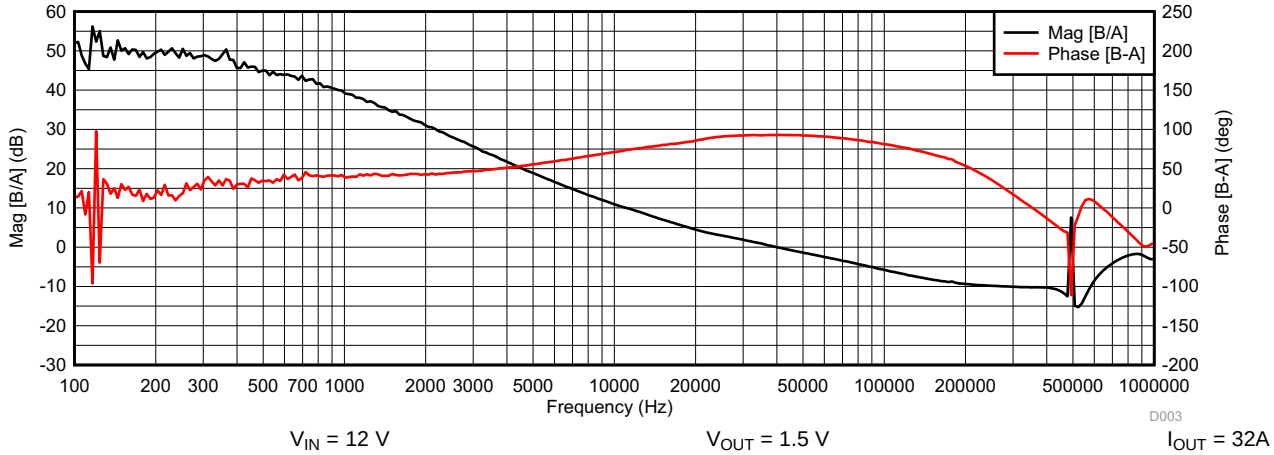

V_{IN} = 12 V V_{OUT} = 1.5 V I_{OUT} = 32A

Figure 62. Bode Plot

Copyright © 2005–2015, Texas Instruments Incorporated

9.3 System Example

9.3.1 Four-Phase Single Output Configuration from 12 to 1.8 V DC-DC Converter Using Two TPS40140

The following example illustrates the design process and component selection for a 4-phase single output synchronous buck converter using two TPS40140.

Here, two modules are designed. One is a master module. The other one is a slave module. Each module contains two phases and each phase handle 5 A. The two modules are stacked together to form a 4-phase converter. More slave modules can be stacked to this converter to get the desired phases. The modules are plugged into a mother board.

Figure 63, Figure 64, and Figure 65 shows the schematics of the four phase converter design.

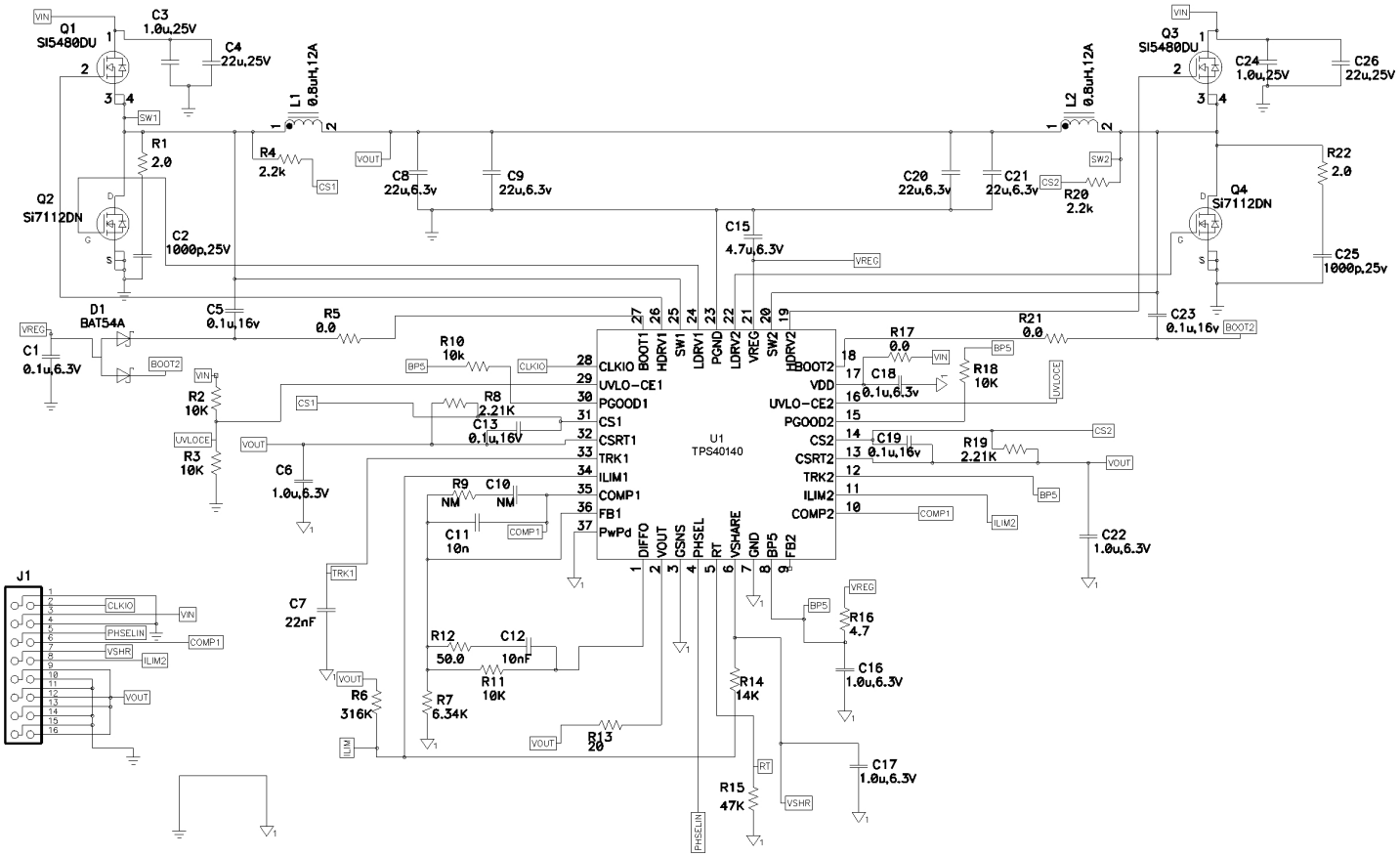

Figure 63. Master Module Schematic

System Example (continued)

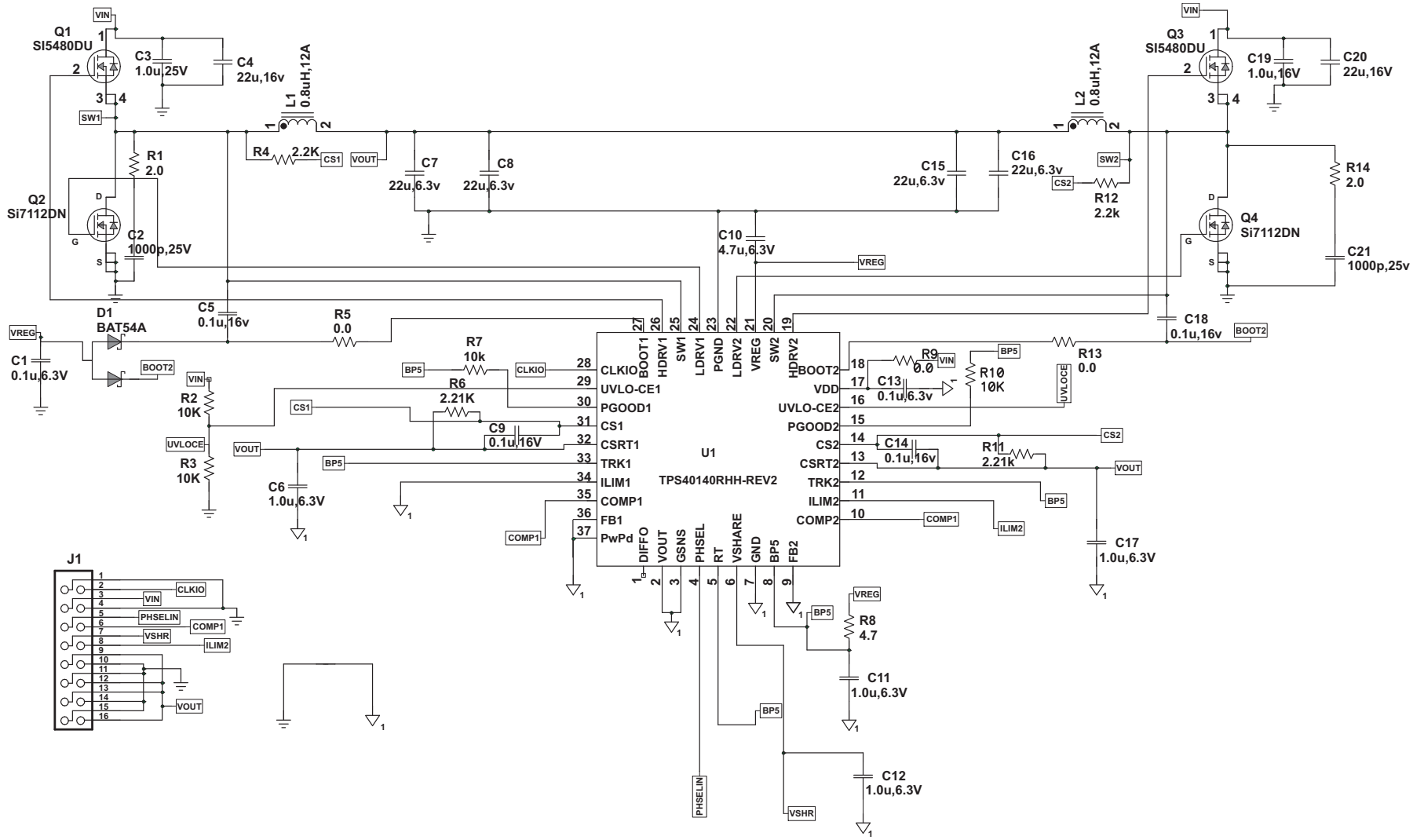

Figure 64. Slave Module Schematic

Copyright © 2005–2015, Texas Instruments Incorporated

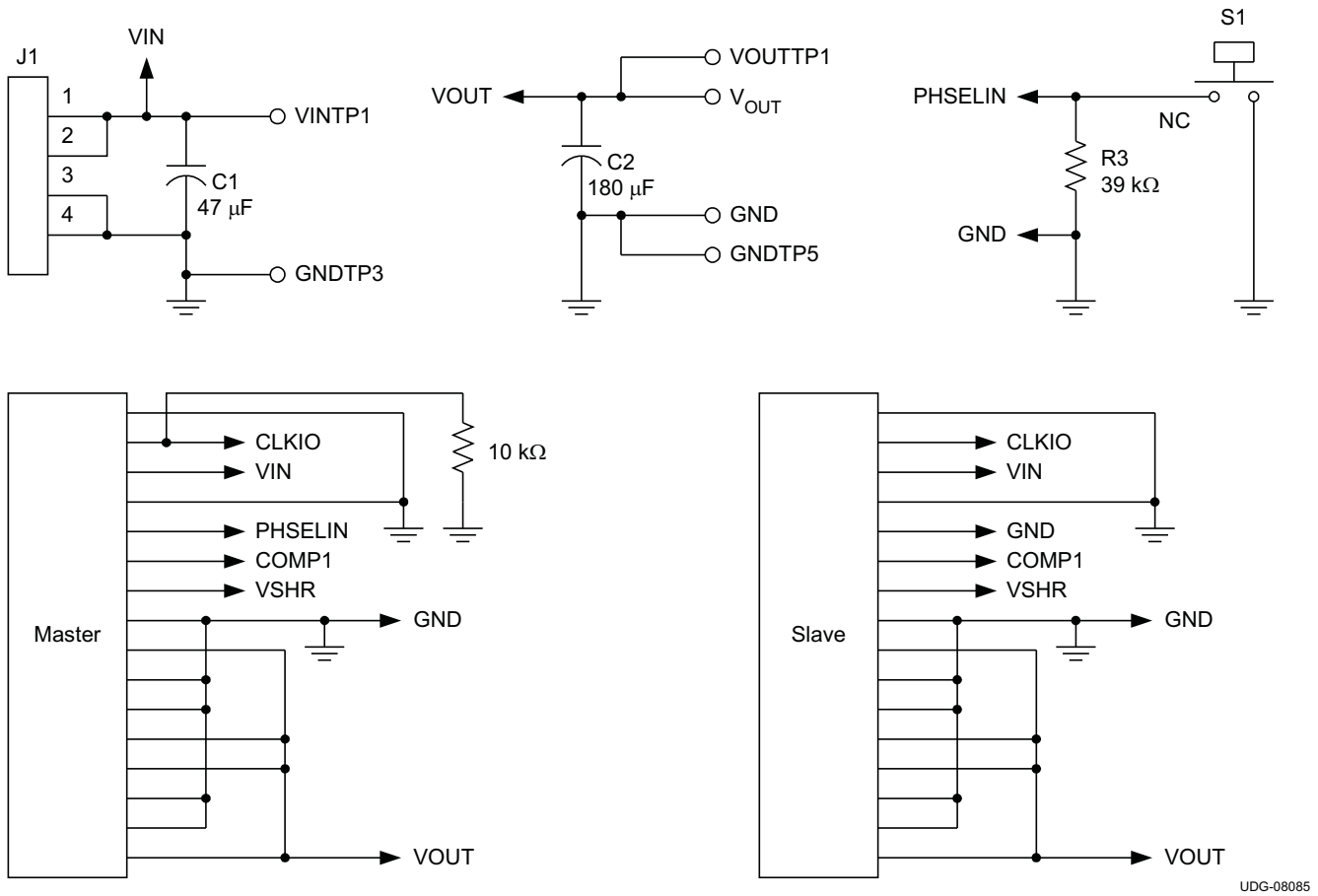

Figure 65. Motherboard Schematic

The design goal parameters are given in Table 8.

Table 8. Design Goal Parameters

PARAMETER		TEST CONDITIONS	MIN	TYP	MAX	UNIT
V_{IN}	Input Voltage		10.8	12	13.2	V
V_{OUT}	Output voltage			1.8		V
V_{RIPPLE}	Output ripple	I_O = 20 A		20		mV
I_{PH}	Phase current			5		A
f_{sw}	Switching frequency			650		kHz
N_{PH}	Phase number			4		

9.3.1.1 Step 1: Output Capacitor Selection

The output capacitor is typically selected by the output load transient response requirement. Equation 23 in the dual output design example is used. Also, as mentioned in the two phase design example, the inductor is equivalent to $\frac{L}{N_{PH}}$. Based on a 10-A load transient with a maximum of 30 mV deviation, a minimum 370-µF output capacitor is required. In the design, one 180 µF, 6.3 V, SP capacitor is placed on the mother board. Four 22-µF, 6,3-V ceramic capacitors are placed on each module. The total output capacitance is 356 µF.

The output ripple current cancellation factor is calculated to be 0.526 with maximum input voltage based on Equation 56.

So the maximum output ripple current is calculated by:

$$I_{RIPPLE} = \frac{V_{OUT} \times (1 - D)}{L \times f_{SW}} \times 0.526 = 1.573\ A \quad (61)$$

With 356-µF output capacitance, the ripple voltage at the capacitor is calculated to be 0.85 mV. In the specification, the output ripple voltage should be less than 20 mV, so based on Equation 24, the required maximum ESR is 12 mΩ. The selected capacitors can reach this requirement.

9.3.1.2 Step 2: Input Capacitor Selection

The input voltage ripple depends on the input capacitance and the ESR. The minimum capacitor and the maximum ESR can be estimated by Equation 25 and Equation 26 in the dual output design example.

For this design, assume $V_{RIPPLE(CIN)}$ is 50 mV and $V_{RIPPLE(CinEST)}$ is 30 mV, also each phase inductor ripple current is 50%, so the calculated minimum capacitance is 23-µF and the maximum ESR is 4.6 mΩ. In this case, one 33-µF 6.3-V SP-capacitor is placed on the mother board and each module has two 22-µF, 6.3-V ceramic capacitors.

The maximum input ripple RMS current is calculated to be 2.57 A with the maximum input voltage based on Equation 58. The selected capacitors are sufficient to meet this requirement.

9.3.1.3 Step 3: Peripheral Component Design

9.3.1.3.1 Master Module

9.3.1.3.1.1 Rt (Pin 5)

It is connected to GND with a resistor that sets the switching frequency.

$$R = 1.33 \times (39.2 \times 10^3 \times (f_{SW})^{-1.058} - 7) = 45.8\ k\Omega \quad (62)$$

Here, f_{SW} represents the phase switching frequency. In the design, a 47-kΩ resistor is selected. The actual switching frequency is 650 kHz.

9.3.1.3.1.2 COMP1 and COMP2 (Pin 35 and Pin 10)

COMP1 is connected to the compensator network.

COMP2 is directly tied to COMP1.

9.3.1.3.1.3 TRK1 and TRK2 (Pin 33 and Pin 12)

A soft start capacitor is connected between TRK1 and GND. TRK2 is directly tied to BP5 to set this channel as a salve.

9.3.1.3.1.4 ILIM1 and ILIM2 (Pin 34 and Pin 11)

ILIM1 is connected to the resistor network that has the same design as the dual output example. The peak current in Equation 42 and Equation 43 is the peak current of each phase.

ILIM2 is grounded.

9.3.1.3.1.5 FB1 and FB2 (Pin 36 and Pin 9)

FB1 is tied to the feedback network. FB2 is connected to GND.

9.3.1.3.1.6 PHSEL (Pin 4)

For this four phase configuration, the PHSEL pin is tied to GND with a 39-kΩ resistor.

9.3.1.3.1.7 PGOOD1 and PGOOD2 (Pin 30 and Pin 15)

Both of PGOOD1 and PGOOD2 are tied to BP5 with a 10-kΩ resistor.

9.3.1.3.1.8 CLKIO (Pin 28)

CLKIO is connected to the same pin in the salve module.

Copyright © 2005–2015, Texas Instruments Incorporated

9.3.1.3.2 Slave Module:

9.3.1.3.2.1 RT (Pin 5)

It is connected to BP5. The slave module receives the clock from the master module.

9.3.1.3.2.2 COMP1 and COMP2 (Pin 35 and Pin 10)

Both of COMP1 and COMP2 are directly tied together to COMP1 or COMP2 in the master module.

9.3.1.3.2.3 TRK1 and TRK2 (Pin 33 and Pin 12)

Both TRK1 and TRK2 are directly tied to BP5.

9.3.1.3.2.4 ILIM1 and ILIM2 (Pin 34 and Pin 11)

Both ILIM1 and ILIM2 are grounded.

9.3.1.3.2.5 FB1 and FB2 (Pin 36 and Pin 9)

Both FB1 and FB2 are connected to GND.

9.3.1.3.2.6 PHSEL (Pin 4)

The PHSEL pin is directly tied to GND.

9.3.1.3.2.7 PGOOD1 and PGOOD2 (Pin 30 and Pin 15)

Both of PGOOD1 and PGOOD2 are tied to BP5 with a 10-kΩ resistor.

9.3.1.3.2.8 CLKIO (Pin 28)

CLKIO is connected to the master module CLKIO.

10 Power Supply Recommendations

This device is designed to operate from an input voltage supply between 4.5 V and 15 V. The proper bypassing of input supplies is critical for noise performance.

11 Layout

11.1 Layout Guidelines

11.1.1 Power Stage

A synchronous BUCK power stage has two primary current loops – The input current loop which carries high AC discontinuous current while the output current loop carries high DC continuous current. The input current loop includes the input capacitors, the main switching MOSFET, the inductor, the output capacitors and the ground path back to the input capacitors. To keep this loop as small as possible, it is generally good practice to place some ceramic capacitance directly between the drain of the main switching MOSFET and the source of the synchronous rectifier (SR) through a power ground plane directly under the MOSFETs. The output current loop includes the SR MOSFET, the inductor, the output capacitors, and the ground return between the output capacitors and the source of the SR MOSFET. As with the input current loop, the ground return between the output capacitor ground and the source of the SR MOSFET should be routed under the inductor and SR MOSFET to minimize the power loop area. The SW node area should be as small as possible to reduce the parasitic capacitance and minimize the radiated emissions. The gate drive loop impedance (HDRV-gate-source-SW and LDRV-gate-source-GND) should be kept to as low as possible. The HDRV and LDRV connections should widen to 20mils as soon as possible out from the device pin.

11.1.2 Device Peripheral

The TPS40140 provides separate signal ground (GND) and power ground (PGND) pins. It is required to separate properly the circuit grounds. The return path for the pins associated with the power stage should be through PGND. The other pins especially for those sensitive pins such as FB, RT and ILIM should be through the low noise GND. The GND and PGND plane are suggested to be connected at the output capacitor with single 20 mil trace. A minimum 0.1-µF ceramic capacitor must be placed as close to the VDD pin and GND as possible with at least 15-mil wide trace from the bypass capacitor to the GND. A 4.7-µF ceramic capacitor should be placed as close to VREG pin and GND as possible. BP5 is the filtered input from the VREG pin. A 4.7-Ω resistor should be connected between VREG and BP5 and a 1-µF ceramic capacitor should be connected from BP5 to GND. Both components should be as close to BP5 pin as possible. When DCR sensing method is applied, the sensing resistor is placed close to the SW node. It is connected to the inductor with Kelvin connection. The sensing traces from the power stage to the chip should be away from the switching components. The sensing capacitor should be placed very close to the CS and CSRT pins. The frequency setting resistor should be placed as close to RT pin and GND as possible. The VOUT and GSNS pins should be directly connected to the point of load where the voltage regulation is required. A parallel pair of 10-mil traces connects the regulated voltage back to the chip. They should be away from the switching components. The PowerPAD™ should be electrically connected to GND.

11.1.3 PowerPAD Layout

The PowerPAD package provides low thermal impedance for heat removal from the device. The PowerPAD derives its name and low thermal impedance from the large bonding pad on the bottom of the device. The circuit board must have an area of solder-tinned-copper underneath the package. The dimensions of this area depend on the size of the PowerPAD package.

Thermal vias connect this area to internal or external copper planes and should have a drill diameter sufficiently small so that the via hole is effectively plugged when the barrel of the via is plated with copper. This plug is needed to prevent wicking the solder away from the interface between the package body and the solder-tinned area under the device during solder reflow. Drill diameters of 0,33 mm (13 mils) works well when 1-oz copper is plated at the surface of the board while simultaneously plating the barrel of the via. If the thermal vias are not plugged when the copper plating is performed, then a solder mask material should be used to cap the vias with a diameter equal to the via diameter plus 0.1 mm minimum. This capping prevents the solder from being wicked through the thermal vias and potentially creating a solder void under the package. Refer to *PowerPAD™ Thermally Enhanced Package* (SLMA002) for more information on the PowerPAD package.

Copyright © 2005–2015, Texas Instruments Incorporated

11.2 Layout Example

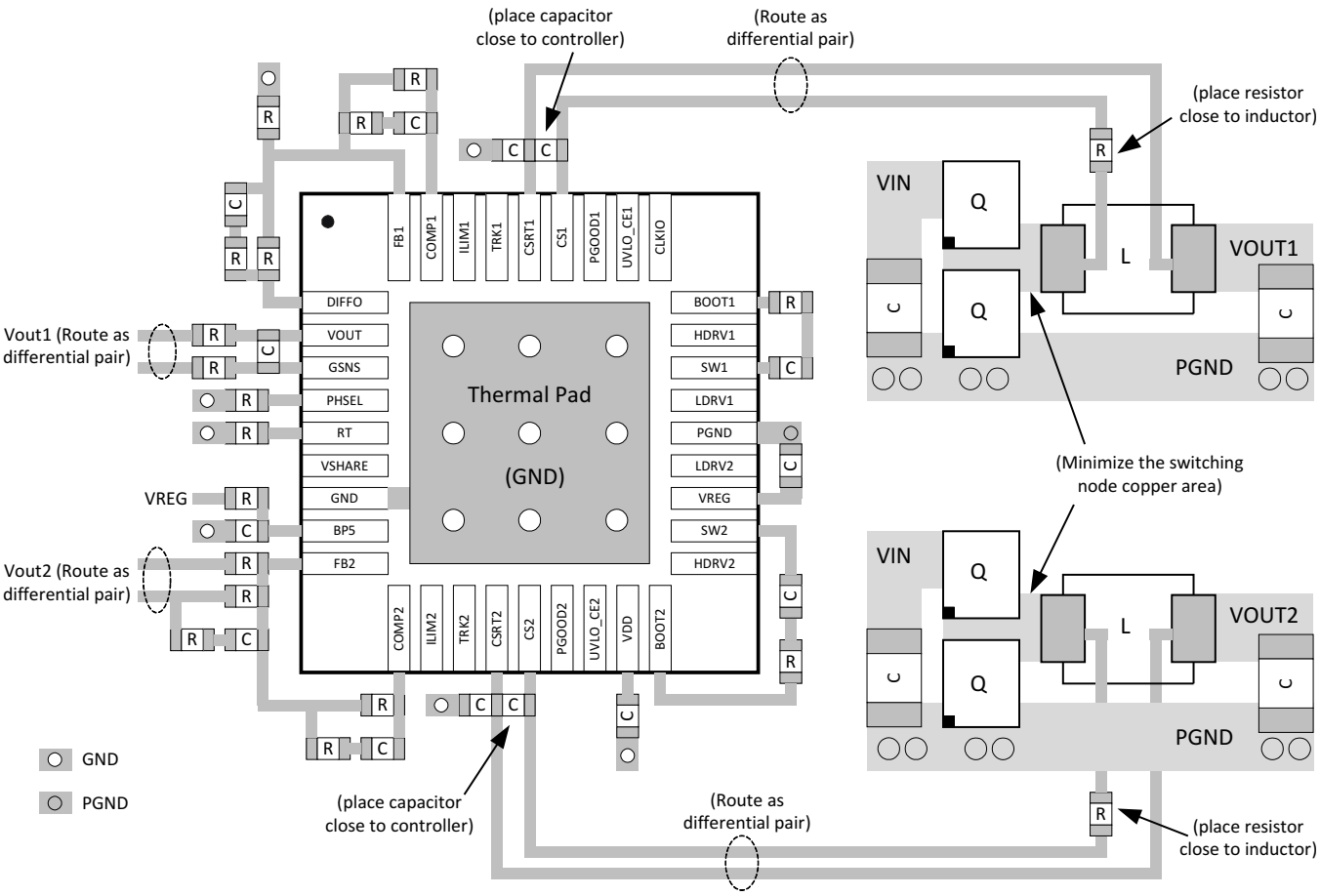

Figure 66. TPS40140 Layout Example

12 Device and Documentation Support

12.1 Device Support

Table 9. Definition of Symbols

PARAMETER	DESCRIPTION
$V_{IN(min)}$	Minimum operating input voltage
$V_{IN(max)}$	Maximum operating input voltage
V_{OUT}	Output voltage
I_{RIPPLE}	Inductor peak-peak ripple current
$I_{TRAN(MAX)}$	Maximum load transient
V_{UNDER}	Output voltage undershot
V_{OVER}	Output voltage overshot
$V_{RIPPLE(TotOUT)}$	Total output ripple
$V_{RIPPLE(COUT)}$	Output voltage ripple due to output capacitance
$V_{RIPPLE(CIN)}$	Input voltage ripple due to input capacitance
$V_{RIPPLE(CinESR)}$	Input voltage ripple due to the ESR of input capacitance
Psw_{cond}	High-side MOSFET conduction loss
Isw_{rms}	RMS current in the high-side MOSFET
Rdson(sw)	*ON* drain-source resistance of the high-side MOSFET
Psw_{sw}	High-side MOSFET switching loss
Ipk	Peak current through the high-side MOSFET
R_{drv}	Driver resistance of the high-side MOSFET
Qgd_{sw}	Gate to drain charge of the high-side MOSFET
Qgs_{sw}	Gate to source charge of the high-side MOSFET
Vgsw	Gate drive voltage of the high-side MOSFET
Psw_{gate}	Gate drive loss of the high-side MOSFET
Qg_{sw}	Gate charge of the high-side MOSFET
Psw_{tot}	Total losses of the high-side MOSFET
Psr_{cond}	Low-side MOSFET conduction loss
Isr_{rms}	RMS current in the low-side MOSFET
Rdson(sr)	*ON* drain-source resistance of the low-side MOSFET
Psr_{gate}	Gate drive loss of the low-side MOSFET
Qg_{sr}	Gate charge of the low-side MOSFET
Vgsr	Gate drive voltage of the low-side MOSFET
P_{diode}	Power loss in the diode
t_d	Dead time between the conduction of high- and low-side MOSFET
V_f	Forward voltage drop of the body diode of the low-side MOSFET
Psr_{tot}	Total losses of the low-side MOSFET
DCR	Inductor DC resistance
Ac	The gain of the current sensing amplifier, typically 13
R_{OUT}	Output load resistance
V_{ramp}	Ramp amplitude, typically 0.5 V
T	Switching period
Gvc(s)	Control to output transfer function
Gc(s)	Compensator transfer function
Tv(s)	Loop gain transfer function
Acm	Gain of the compensator
f_p	The pole frequency of the compensator
f_z	The zero frequency of the compensator

Copyright © 2005–2015, Texas Instruments Incorporated

12.2 Documentation Support

12.2.1 Related Documentation

These references may be found on the web at www.power.ti.com under *Technical Documents*. Many design tools and links to additional references, including design software, may also be found at www.power.ti.com

1. *Under The Hood of Low Voltage DC/DC Converters*, SEM1500 Topic 5, 2002 Seminar Series
2. *Understanding Buck Power Stages in Switchmode Power Supplies* (SLVA057) March 1999
3. *Design and Application Guide for High Speed MOSFET Gate Drive Circuits*, SEM 1400, 2001 Seminar Series
4. *Designing Stable Control Loops*, SEM 1400, 2001 Seminar Series
5. Additional PowerPAD information may be found in Applications Briefs (SLMA002) and (SLMA004)
6. QFN/SON PCB Attachment, Texas Instruments (SLUA271), June 2002

12.3 Trademarks

PowerPAD is a trademark of Texas Instruments.
All other trademarks are the property of their respective owners.

12.4 Electrostatic Discharge Caution

These devices have limited built-in ESD protection. The leads should be shorted together or the device placed in conductive foam during storage or handling to prevent electrostatic damage to the MOS gates.

12.5 Glossary

SLYZ022 — *TI Glossary*.

This glossary lists and explains terms, acronyms, and definitions.

13 Mechanical, Packaging, and Orderable Information

The following pages include mechanical, packaging, and orderable information. This information is the most current data available for the designated devices. This data is subject to change without notice and revision of this document. For browser-based versions of this data sheet, refer to the left-hand navigation.

PACKAGING INFORMATION

Orderable part number	Status (1)	Material type (2)	Package | Pins	Package qty | Carrier	RoHS (3)	Lead finish/ Ball material (4)	MSL rating/ Peak reflow (5)	Op temp (°C)	Part marking (6)
TPS40140RHHR	NRND	Production	VQFN (RHH) | 36	2500 | LARGE T&R	Yes	NIPDAU	Level-2-260C-1 YEAR	-40 to 85	40140
TPS40140RHHR.A	NRND	Production	VQFN (RHH) | 36	2500 | LARGE T&R	Yes	NIPDAU	Level-2-260C-1 YEAR	-40 to 85	40140
TPS40140RHHRG4	NRND	Production	VQFN (RHH) | 36	2500 | LARGE T&R	Yes	NIPDAU	Level-2-260C-1 YEAR	-40 to 85	40140
TPS40140RHHT	NRND	Production	VQFN (RHH) | 36	250 | SMALL T&R	Yes	NIPDAU	Level-2-260C-1 YEAR	-40 to 85	40140
TPS40140RHHT.A	NRND	Production	VQFN (RHH) | 36	250 | SMALL T&R	Yes	NIPDAU	Level-2-260C-1 YEAR	-40 to 85	40140
TPS40140RHHTG4	NRND	Production	VQFN (RHH) | 36	250 | SMALL T&R	Yes	NIPDAU	Level-2-260C-1 YEAR	-40 to 85	40140

(1) **Status:** For more details on status, see our product life cycle.

(2) **Material type:** When designated, preproduction parts are prototypes/experimental devices, and are not yet approved or released for full production. Testing and final process, including without limitation quality assurance, reliability performance testing, and/or process qualification, may not yet be complete, and this item is subject to further changes or possible discontinuation. If available for ordering, purchases will be subject to an additional waiver at checkout, and are intended for early internal evaluation purposes only. These items are sold without warranties of any kind.

(3) **RoHS values:** Yes, No, RoHS Exempt. See the TI RoHS Statement for additional information and value definition.

(4) **Lead finish/Ball material:** Parts may have multiple material finish options. Finish options are separated by a vertical ruled line. Lead finish/Ball material values may wrap to two lines if the finish value exceeds the maximum column width.

(5) **MSL rating/Peak reflow:** The moisture sensitivity level ratings and peak solder (reflow) temperatures. In the event that a part has multiple moisture sensitivity ratings, only the lowest level per JEDEC standards is shown. Refer to the shipping label for the actual reflow temperature that will be used to mount the part to the printed circuit board.

(6) **Part marking:** There may be an additional marking, which relates to the logo, the lot trace code information, or the environmental category of the part.

Multiple part markings will be inside parentheses. Only one part marking contained in parentheses and separated by a "~" will appear on a part. If a line is indented then it is a continuation of the previous line and the two combined represent the entire part marking for that device.

Important Information and Disclaimer: The information provided on this page represents TI's knowledge and belief as of the date that it is provided. TI bases its knowledge and belief on information provided by third parties, and makes no representation or warranty as to the accuracy of such information. Efforts are underway to better integrate information from third parties. TI has taken and continues to take reasonable steps to provide representative and accurate information but may not have conducted destructive testing or chemical analysis on incoming materials and chemicals. TI and TI suppliers consider certain information to be proprietary, and thus CAS numbers and other limited information may not be available for release.

In no event shall TI's liability arising out of such information exceed the total purchase price of the TI part(s) at issue in this document sold by TI to Customer on an annual basis.

TAPE AND REEL INFORMATION

REEL DIMENSIONS

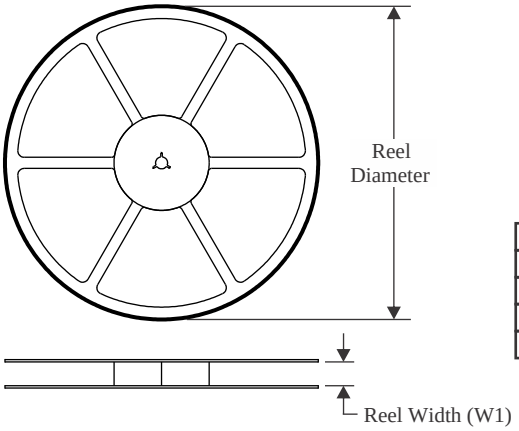

TAPE DIMENSIONS

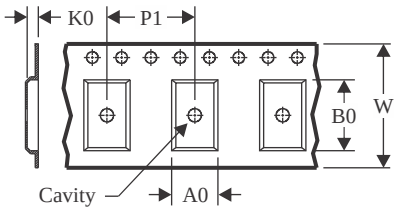

A0	Dimension designed to accommodate the component width
B0	Dimension designed to accommodate the component length
K0	Dimension designed to accommodate the component thickness
W	Overall width of the carrier tape
P1	Pitch between successive cavity centers

QUADRANT ASSIGNMENTS FOR PIN 1 ORIENTATION IN TAPE

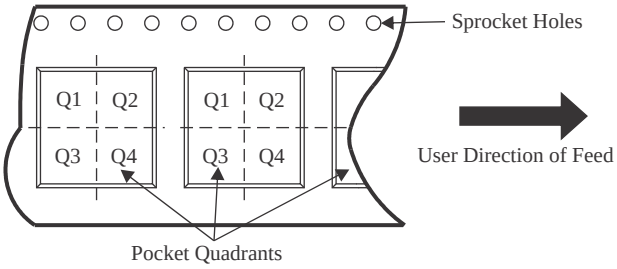

*All dimensions are nominal

Device	Package Type	Package Drawing	Pins	SPQ	Reel Diameter (mm)	Reel Width W1 (mm)	A0 (mm)	B0 (mm)	K0 (mm)	P1 (mm)	W (mm)	Pin1 Quadrant
TPS40140RHHR	VQFN	RHH	36	2500	330.0	16.4	6.3	6.3	1.1	12.0	16.0	Q2
TPS40140RHHT	VQFN	RHH	36	250	180.0	16.4	6.3	6.3	1.1	12.0	16.0	Q2

TAPE AND REEL BOX DIMENSIONS

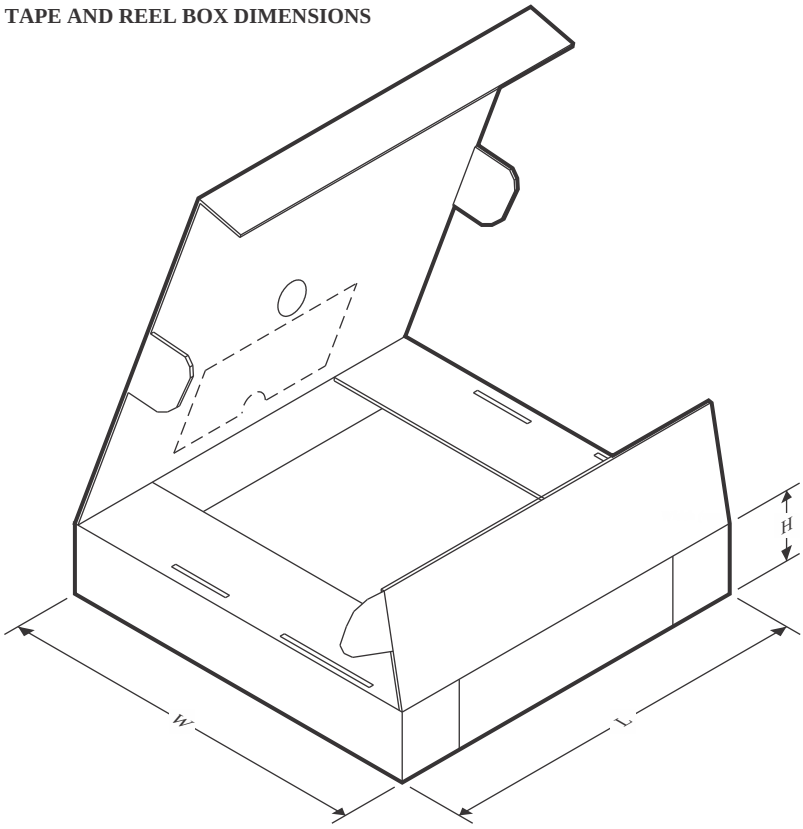

*All dimensions are nominal

Device	Package Type	Package Drawing	Pins	SPQ	Length (mm)	Width (mm)	Height (mm)
TPS40140RHHR	VQFN	RHH	36	2500	353.0	353.0	32.0
TPS40140RHHT	VQFN	RHH	36	250	213.0	191.0	35.0

GENERIC PACKAGE VIEW

RHH 36

VQFN - 1 mm max height

6 x 6, 0.5 mm pitch

PLASTIC QUAD FLATPACK - NO LEAD

This image is a representation of the package family, actual package may vary.
Refer to the product data sheet for package details.

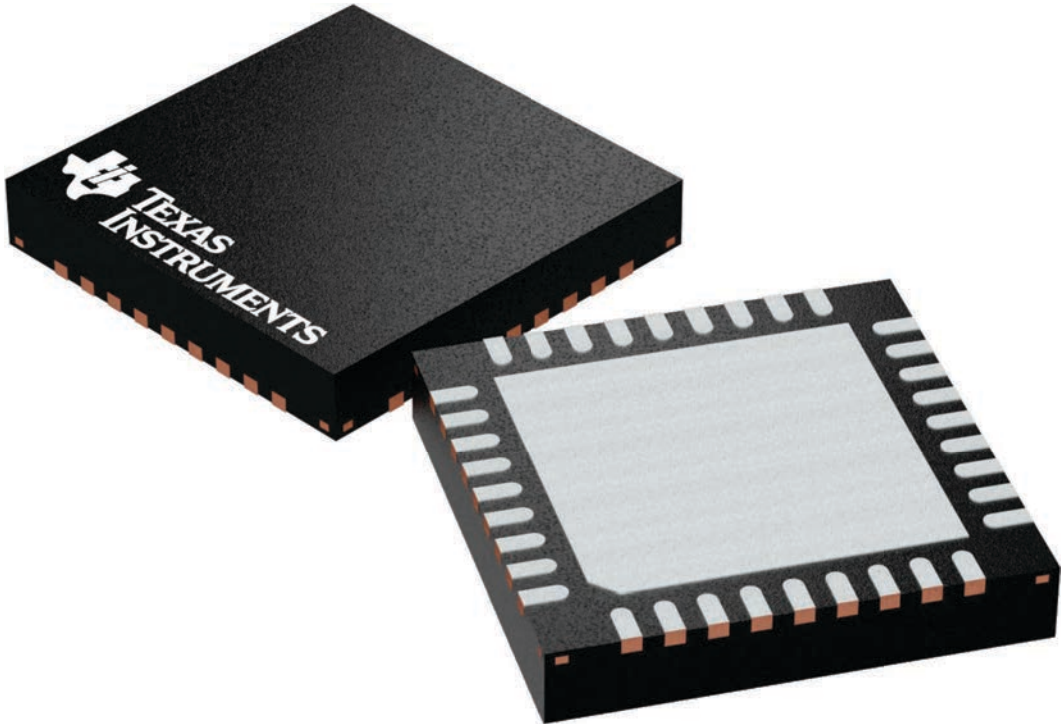

4225440/A

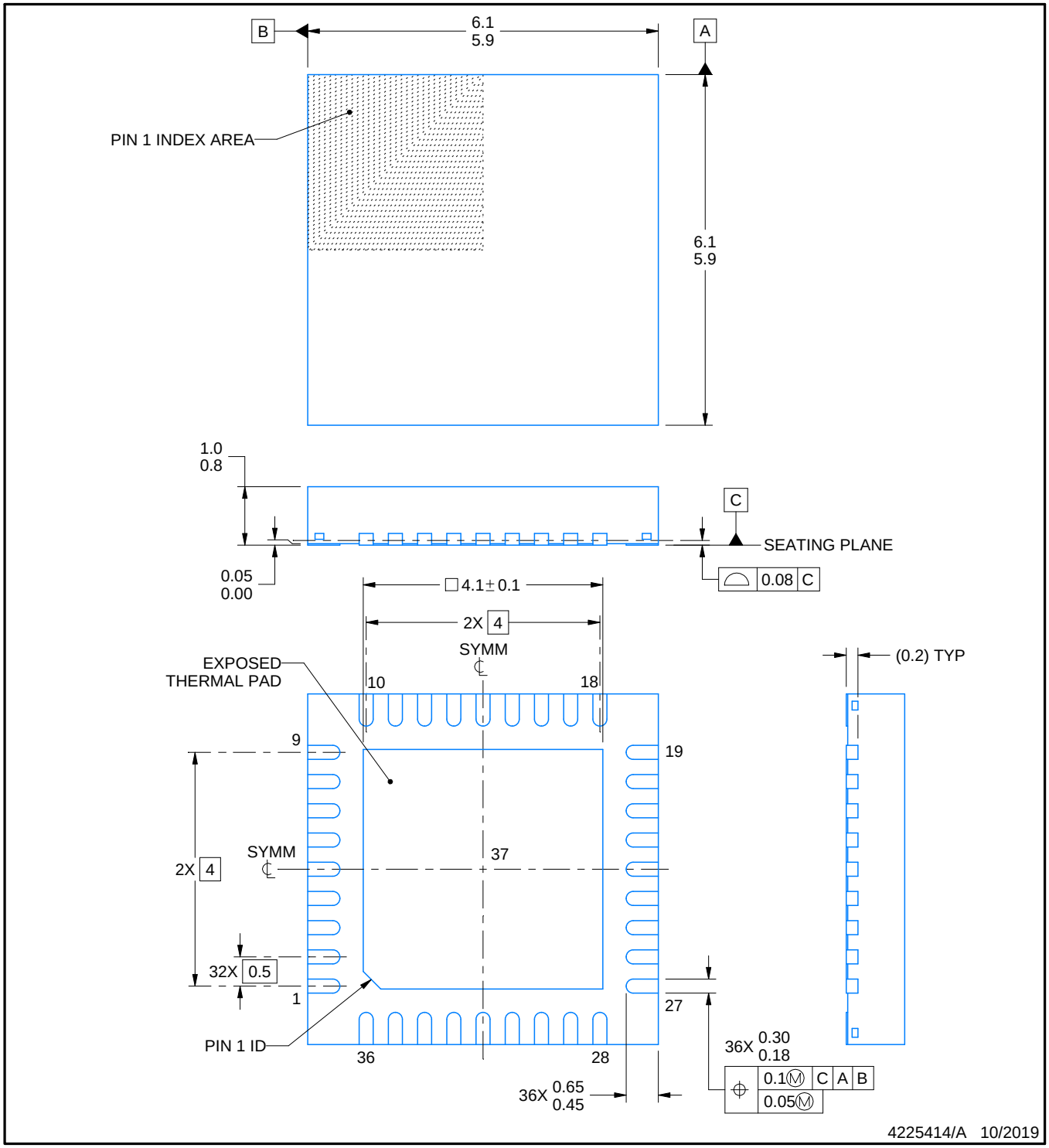

NOTES:

1. All linear dimensions are in millimeters. Any dimensions in parenthesis are for reference only. Dimensioning and tolerancing per ASME Y14.5M.
2. This drawing is subject to change without notice.
3. The package thermal pad must be soldered to the printed circuit board for thermal and mechanical performance.

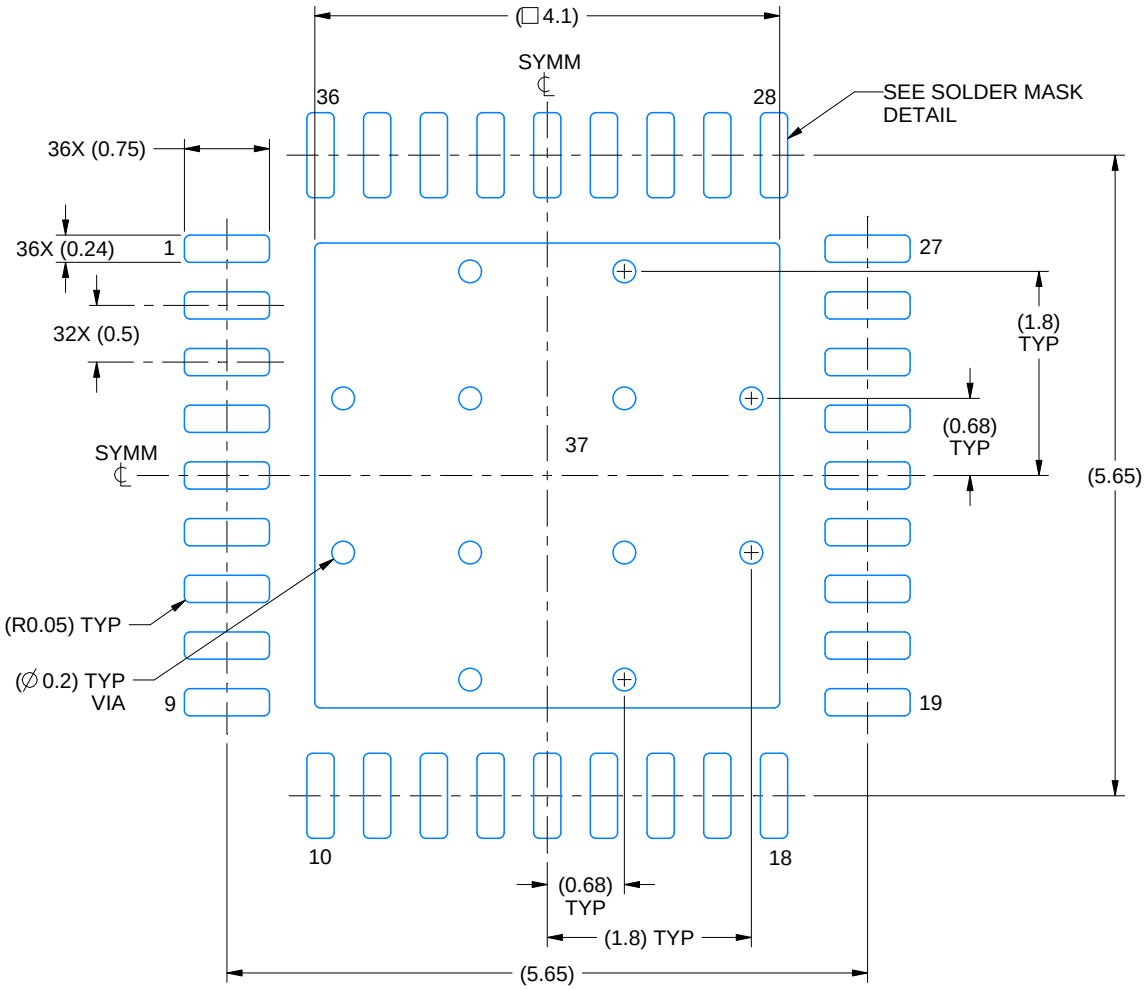

LAND PATTERN EXAMPLE
EXPOSED METAL SHOWN
SCALE: 15X

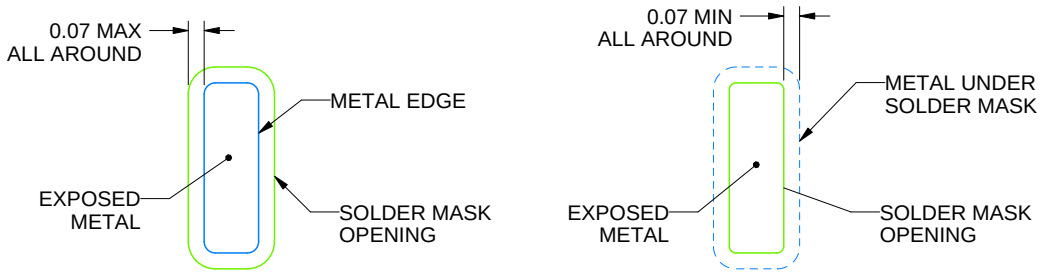

NON SOLDER MASK DEFINED (PREFERRED)

SOLDER MASK DEFINED

SOLDER MASK DETAILS

4225414/A 10/2019

NOTES: (continued)

4. This package is designed to be soldered to a thermal pad on the board. For more information, see Texas Instruments literature number SLUA271 (www.ti.com/lit/slua271).
5. Vias are optional depending on application, refer to device data sheet. If any vias are implemented, refer to their locations shown on this view. It is recommended that vias under paste be filled, plugged or tented.

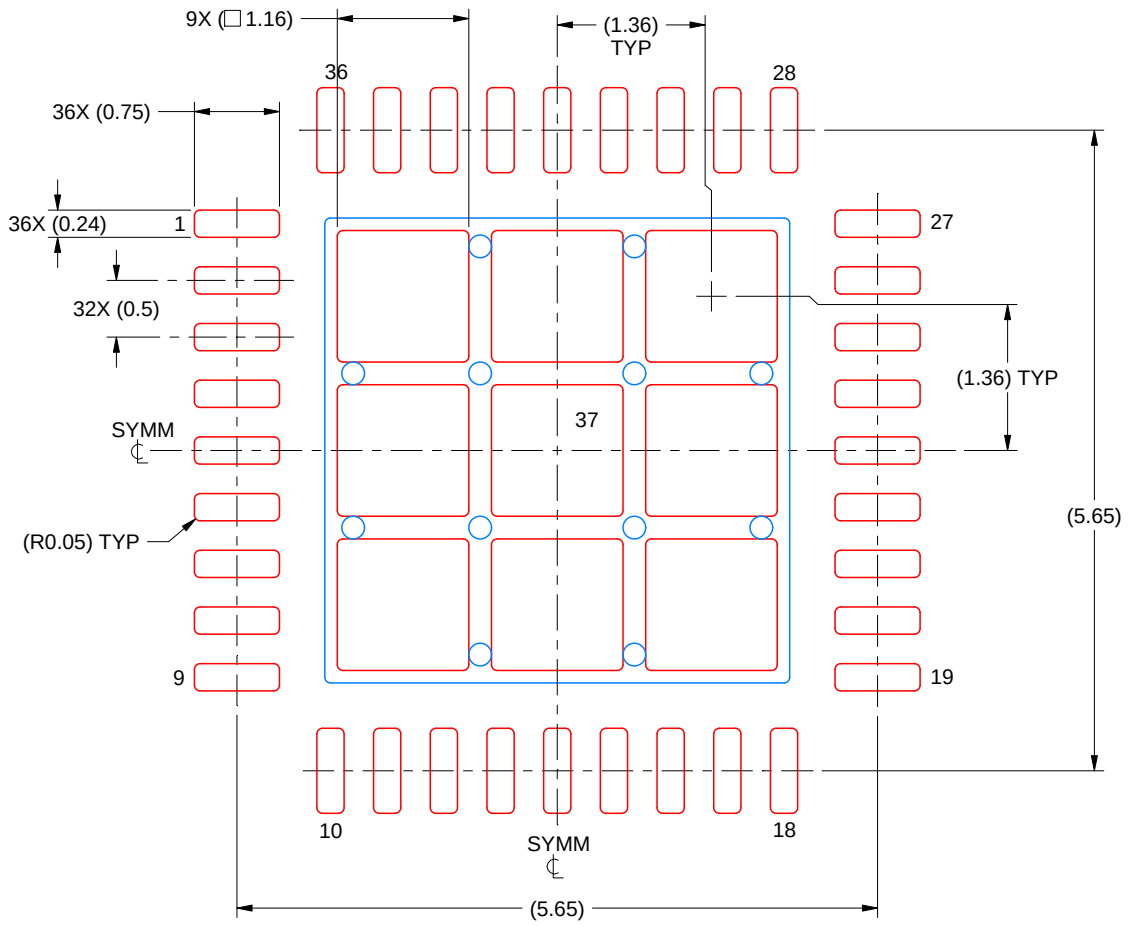

SOLDER PASTE EXAMPLE
BASED ON 0.125 MM THICK STENCIL
SCALE: 15X

EXPOSED PAD 37
72% PRINTED SOLDER COVERAGE BY AREA UNDER PACKAGE

4225414/A 10/2019

NOTES: (continued)

6. Laser cutting apertures with trapezoidal walls and rounded corners may offer better paste release. IPC-7525 may have alternate design recommendations.

IMPORTANT NOTICE AND DISCLAIMER

TI PROVIDES TECHNICAL AND RELIABILITY DATA (INCLUDING DATA SHEETS), DESIGN RESOURCES (INCLUDING REFERENCE DESIGNS), APPLICATION OR OTHER DESIGN ADVICE, WEB TOOLS, SAFETY INFORMATION, AND OTHER RESOURCES “AS IS” AND WITH ALL FAULTS, AND DISCLAIMS ALL WARRANTIES, EXPRESS AND IMPLIED, INCLUDING WITHOUT LIMITATION ANY IMPLIED WARRANTIES OF MERCHANTABILITY, FITNESS FOR A PARTICULAR PURPOSE OR NON-INFRINGEMENT OF THIRD PARTY INTELLECTUAL PROPERTY RIGHTS.

These resources are intended for skilled developers designing with TI products. You are solely responsible for (1) selecting the appropriate TI products for your application, (2) designing, validating and testing your application, and (3) ensuring your application meets applicable standards, and any other safety, security, regulatory or other requirements.

These resources are subject to change without notice. TI grants you permission to use these resources only for development of an application that uses the TI products described in the resource. Other reproduction and display of these resources is prohibited. No license is granted to any other TI intellectual property right or to any third party intellectual property right. TI disclaims responsibility for, and you will fully indemnify TI and its representatives against, any claims, damages, costs, losses, and liabilities arising out of your use of these resources.

TI’s products are provided subject to TI’s Terms of Sale or other applicable terms available either on ti.com or provided in conjunction with such TI products. TI’s provision of these resources does not expand or otherwise alter TI’s applicable warranties or warranty disclaimers for TI products.

TI objects to and rejects any additional or different terms you may have proposed.

Mailing Address: Texas Instruments, Post Office Box 655303, Dallas, Texas 75265
Copyright © 2025, Texas Instruments Incorporated