Series Impedance Film Capacitors
Radial Potted Type

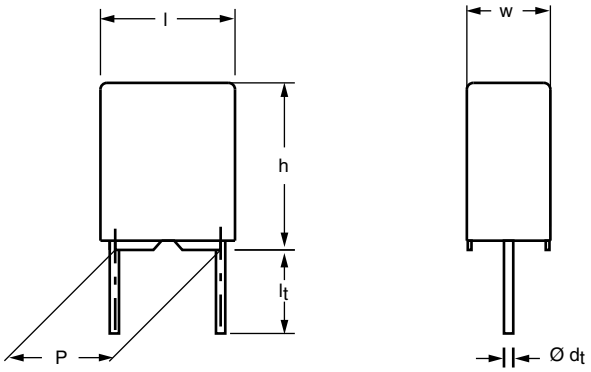

APPLICATIONS
Based on long term capacitance stability and good self-healing properties, these capacitors are intended for applications in series with the mains acting as voltage-dividing impedance.
These capacitors are not allowed to be used as across-the-line capacitors.

REFERENCE SPECIFICATIONS
IEC 60384-14

PERFORMANCE GRADE
Grade 1 (long life)

MARKING
C-value, tolerance, rated voltage, manufacturer's type, code for dielectric material, manufacturer's location, manufacturer's logo, year and week

DIELECTRIC
Polyester film [1]

ELECTRODES
Metallized electrodes

CONSTRUCTION
Series construction



RATED AC VOLTAGE
AC 275 V; 50 Hz to 60 Hz

PERMISSIBLE DC VOLTAGE
DC 400 V

Notes
[1] For pitch = 15 mm, C < 15 nF, dielectric is polypropylene
[2] 27.5 mm pitch parts - in progress

FEATURES
- 10 mm to 27.5 mm lead pitch [2]
- Supplied loose in box, taped on ammopack or reel
- Compliant to RoHS Directive 2002/95/EC

Pb-free
e3
RoHS COMPLIANT

ENCAPSULATION
Plastic case, epoxy resin sealed, flame retardant (UL-class 94 V-0)

CLIMATIC TESTING CLASS ACC. TO IEC 60068-1
55/105/56/B

CAPACITANCE RANGE AND TOLERANCE [2]
E6 series 0.01 µF to 2.2 µF, tolerance ± 20 %
E12 series 0.01 µF to 2.2 µF, tolerance ± 10 % and ± 5 %
Preferred values acc. to E6

LEADS
Tinned wire

RATED TEMPERATURE
110 °C

MAXIMUM APPLICATION TEMPERATURE
105 °C

DETAIL SPECIFICATION
For more detailed data and test requirements contact:
RFI@vishay.com

COMPOSITION OF CATALOG NUMBER

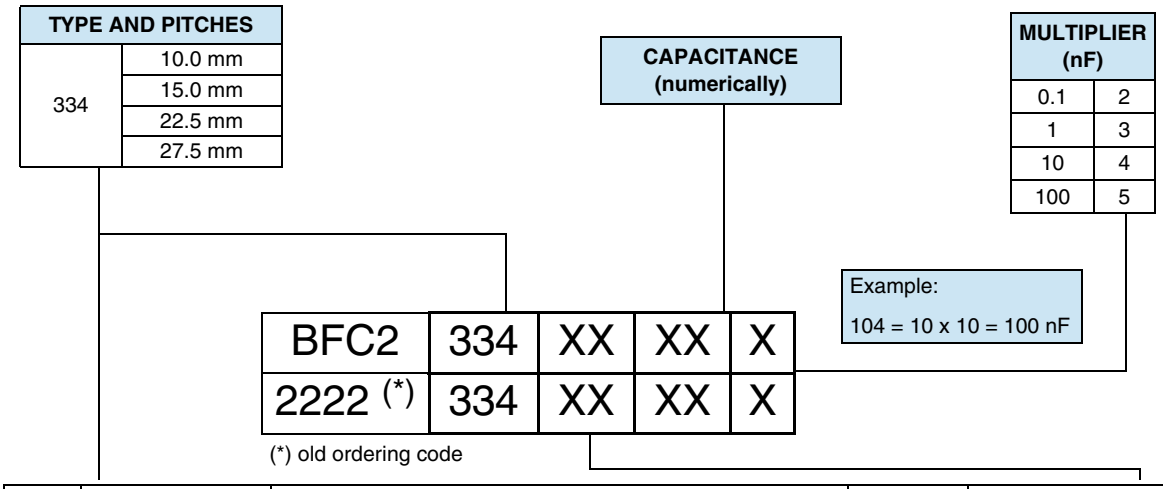

TYPE	PACKAGING	STANDARD DIMENSIONS	C-TOL.	CODE NUMBER
334	Loose in box	lead length 3.5 mm + 1/- 0.5 mm or 3.5 mm ± 0.3 mm	± 20 %	BFC2 334 20…
		lead length 5.0 mm ± 1.0 mm		BFC2 334 22…
		lead length 25.0 mm ± 2.0 mm		BFC2 334 24…
	Taped (1)	reel: H = 18.5 mm; P_0 = 12.7 mm or 15.0 mm		BFC2 334 26…
		ammopack: H = 18.5 mm; P_0 = 12.7 mm		BFC2 334 28…
	Loose in box	lead length 3.5 mm + 1/- 0.5 mm or 3.5 mm ± 0.3 mm	± 10 %	BFC2 334 10…
		lead length 5.0 mm ± 1.0 mm		BFC2 334 12…
		lead length 25.0 mm ± 2.0 mm		BFC2 334 14…
	Taped (1)	reel: H = 18.5 mm; P_0 = 12.7 mm or 15.0 mm		BFC2 334 16…
		ammopack: H = 18.5 mm; P_0 = 12.7 mm		BFC2 334 18…
	Loose in box	lead length 3.5 mm + 1/- 0.5 mm or 3.5 mm ± 0.3 mm	± 5 %	BFC2 334 50…
		lead length 5.0 mm ± 1.0 mm		BFC2 334 52…
		lead length 25.0 mm ± 2.0 mm		BFC2 334 54…
	Taped (1)	reel: H = 18.5 mm; P_0 = 12.7 mm or 15.0 mm		BFC2 334 56…
		ammopack: H = 18.5 mm; P_0 = 12.7 mm		BFC2 334 58…
	PACKAGING	**ALTERNATIVE LARGER PITCH SIZES**	**C-TOL.**	**CODE NUMBER**
	Loose in box	lead length 3.5 mm +1 mm/- 0.5 mm or 3.5 mm ± 0.3 mm	± 20 %	BFC2 334 21…
		lead length 5.0 mm ± 1.0 mm		BFC2 334 23…
		lead length 25.0 mm ± 2.0 mm		BFC2 334 25…
	Taped (1)	reel or ammopack: H = 18.5 mm; P_0 = 12.7 mm		BFC2 334 27…
	Loose in box	lead length 3.5 mm +1 mm/- 0.5 mm or 3.5 mm ± 0.3 mm	± 10 %	BFC2 334 11…
		lead length 5.0 mm ± 1.0 mm		BFC2 334 13…
		lead length 25.0 mm ± 2.0 mm		BFC2 334 15…
	Taped (1)	reel or ammopack: H = 18.5 mm; P_0 = 12.7 mm		BFC2 334 17…
	Loose in box	lead length 3.5 mm +1 mm/- 0.5 mm or 3.5 mm ± 0.3 mm	± 5 %	BFC2 334 51…
		lead length 5.0 mm ± 1.0 mm		BFC2 334 53…
		lead length 25.0 mm ± 2.0 mm		BFC2 334 55…
	Taped (1)	reel or ammopack: H = 18.5 mm; P_0 = 12.7 mm		BFC2 334 57…

Note

(1) For detailed type specifications refer to packaging information: www.vishay.com/doc?28139

SPECIFIC REFERENCE DATA

DESCRIPTION	VALUE	
Rated AC voltage (U_{RAC})	275 V	
Permissible DC voltage (U_{RDC})	400 V	
Tangent of loss angle:	**AT 1 kHz**	**AT 10 kHz**
C ≤ 0.1 µF	≤ 75 x 10^{-4}	≤ 110 x 10^{-4}
0.1 µF < C ≤ 0.47 µF	≤ 75 x 10^{-4}	≤ 120 x 10^{-4}
0.47 µF < C ≤ 2.2 µF	≤ 75 x 10^{-4}	≤ 150 x 10^{-4}
Rated voltage pulse slope $(dU/dt)_R$ at 400 V_{DC}		
$l_{max.}$ = 12.5 mm $l_{max.}$ = 17.5 mm $l_{max.}$ = 26.0 mm $l_{max.}$ = 31.0 mm	200 V/µs 100 V/µs 70 V/µs 55 V/µs	
R between leads, for C ≤ 0.33 µF: at 100 V, 1 min	> 30 000 MΩ	
RC between leads, for C > 0.33 µF: at 100 V, 1 min	> 10 000 s	
R between interconnecting leads and casing: at 100 V, 1 min	> 30 000 MΩ	
Withstanding (DC) voltage (cut off current 10 mA) (1), rise time ≤ 1000 V/s	720 V; 1 min	
Withstanding (AC) voltage between leads and case	2050 V; 1 min	
Maximum application temperature	105 °C	

Note

(1) See “Voltage Proof Test for Metalized Film Capacitors”: www.vishay.com/doc?28169

Pitch: 10.0 mm; C-tol. = ± 20 %

C (µF)	DIMENSIONS w x h x l (mm)	MASS (g) (3)	CATALOG NUMBER BFC2 334 ..... AND PACKAGING								
			LOOSE IN BOX					AMMOPACK (1)		LARGE REEL (500 mm) (1)(2)	
			Short leads			Long leads		H = 18.5 mm P_0 = 12.7 mm		H = 18.5 mm P_0 = 15.0 mm	
			l_t = 3.5 mm + 1 mm/- 0.5 mm	l_t = 5.0 mm ± 1.0 mm	SPQ	l_t = 25.0 mm ± 2.0 mm	SPQ		SPQ		SPQ
Pitch = 10.0 mm ± 0.4 mm; d_t = 0.60 mm ± 0.06 mm											
0.01	4.0 x 10.0 x 12.5	0.7	20103	22103	1000	24103	1250	28103	950		
0.015			20153	22153		24153		28153			
0.022			20223	22223		24223		28223			
0.033			20333	22333		24333		28333			
0.047			20473	22473		24473		28473			
0.068			20683	22683		24683		28683			
0.1	5.0 x 11.0 x 12.5	0.8	20104	22104	1000	24104	1000	28104	750	26104	1900

Notes

• SPQ = Standard Packing Quantity

(1) H = In-tape height; P_0 = Sprocket hole distance; for detailed specifications refer to packaging information

(2) Reel diameter = 356 mm is available on request

(3) Weight for short lead product only

Pitch: 10.0 mm; C-tol. = ± 10 %

C (µF)	DIMENSIONS w x h x l (mm)	MASS (g) (3)	CATALOG NUMBER BFC2 334 ..... AND PACKAGING							
			LOOSE IN BOX					AMMOPACK (1)		LARGE REEL (500 mm) (1)(2)	
			Short leads			Long leads		H = 18.5 mm P_0 = 12.7 mm		H = 18.5 mm P_0 = 15.0 mm	
			l_t = 3.5 mm + 1.0 mm/- 0.5 mm	l_t = 5.0 mm ± 1.0 mm	SPQ	l_t = 25.0 mm ± 2.0 mm	SPQ		SPQ		SPQ
Pitch = 10.0 mm ± 0.4 mm; d_t = 0.60 mm ± 0.06 mm											
0.01	4.0 x 10.0 x 12.5	0.7	10103	12103	1000	14103	1250	18103	950		
0.012			10123	12123		14123		18123			
0.015			10153	12153		14153		18153			
0.018			10183	12183		14183		18183			
0.022			10223	12223		14223		18223			
0.027			10273	12273		14273		18273			
0.033			10333	12333		14333		18333			
0.039			10393	12393		14393		18393			
0.047			10473	12473		14473		18473			
0.056			10563	12563		14563		18563			
0.068			10683	12683		14683		18683			
0.082	5.0 x 11.0 x 12.5	0.9	10823	12823		14823	1000	18823	750	16823	1900
0.1	6.0 x 12.0 x 12.5	1.2	10104	12104	750	14104	750	18104	600	16104	1500

Notes

• SPQ = Standard Packing Quantity

(1) H = In-tape height; P_0 = Sprocket hole distance; for detailed specifications refer to packaging information

(2) Reel diameter = 356 mm is available on request

(3) Weight for short lead product only

Pitch: 10.0 mm; C-tol. = ± 5 %

C (µF)	DIMENSIONS w x h x l (mm)	MASS (g) (3)	CATALOG NUMBER BFC2 334 ..... AND PACKAGING							
			LOOSE IN BOX					AMMOPACK (1)		LARGE REEL (500 mm) (1) (2)	
			Short leads			Long leads		H = 18.5 mm P_0 = 12.7 mm		H = 18.5 mm P_0 = 15.0 mm	
			l_t = 3.5 + 1.0 mm/- 0.5 mm	l_t = 5.0 ± 1.0 mm	SPQ	l_t = 25.0 ± 2.0 mm	SPQ		SPQ		SPQ
Pitch = 10.0 mm ± 0.4 mm; d_t = 0.60 mm ± 0.06 mm											
0.01	4.0 x 10.0 x 12.5	0.7	50103	52103	1000	54103	1250	58103	950		
0.012			50123	52123		54123		58123			
0.015			50153	52153		54153		58153			
0.018			50183	52183		54183		58183			
0.022			50223	52223		54223		58223			
0.027			50273	52273		54273		58273			
0.033			50333	52333		54333		58333			
0.039			50393	52393		54393		58393			
0.047			50473	52473		54473		58473			
0.056			50563	52563		54563		58563			
0.068			50683	52683		54683		58683			
0.082	5.0 x 11.0 x 12.5	0.9	50823	52823		54823	1000	58823	750	56823	1900
0.1	6.0 x 12.0 x 12.5	1.2	50104	52104	750	54104	750	58104	600	56104	1500

Notes

• SPQ = Standard Packing Quantity

(1) H = In-tape height; P_0 = Sprocket hole distance; for detailed specifications refer to packaging information

(2) Reel diameter = 356 mm is available on request

(3) Weight for short lead product only

Pitch: 15.0 mm; C-tol. = ± 20 %

C (µF)	DIMENSIONS w x h x l (mm)	MASS (g) (3)	CATALOG NUMBER BFC2 334 ..... AND PACKAGING						
			LOOSE IN BOX					REEL (500 mm) (1)(2)	
			Short leads			Long leads		H = 18.5 mm P_0 = 12.7 mm	
			l_t = 3.5 mm ± 0.3 mm	l_t = 5.0 mm ± 1.0 mm	SPQ	l_t = 25.0 mm ± 2.0 mm	SPQ		SPQ
Pitch = 15.0 mm ± 0.4 mm; d_t = 0.60 mm ± 0.06 mm									
0.01	5.0 x 11.0 x 17.5	1.2	21103	23103	1250	25103	1000	27103	1100
0.015			21153	23153		25153		27153	
0.022			21223	23223		25223		27223	
0.033			21333	23333		25333		27333	
0.047			21473	23473		25473		27473	
0.068			21683	23683		25683		27683	
0.1			21104	23104		25104		27104	
0.15			20154	22154		24154		26154	
0.22	6.0 x 12.0 x 17.5	1.6	20224	22224	1000	24224	1000	26224	900
Pitch = 15.0 mm ± 0.4 mm; d_t = 0.80 mm ± 0.08 mm									
0.33	8.5 x 15.0 x 17.5	2.8	20334	22334	750	24334	500	26334	650
0.47			20474	22474		24474		26474	

Notes

• SPQ = Standard Packing Quantity

(1) H = In-tape height; P_0 = Sprocket hole distance; for detailed specifications refer to packaging information

(2) Reel diameter = 356 mm is available on request

(3) Weight for short lead product only

Pitch: 15.0 mm; C-tol. = ± 10 %

C (µF)	DIMENSIONS w x h x l (mm)	MASS (g) (3)	CATALOG NUMBER BFC2 334 ..... AND PACKAGING						
			LOOSE IN BOX					REEL (500 mm) (1)(2)	
			Short leads			Long leads		H = 18.5 mm P_0 = 12.7 mm	
			l_t = 3.5 mm ± 0.3 mm	l_t = 5.0 mm ± 1.0 mm	SPQ	l_t = 25.0 mm ± 2.0 mm	SPQ		SPQ
Pitch = 15.0 mm ± 0.4 mm; d_t = 0.60 mm ± 0.06 mm									
0.01	5.0 x 11.0 x 17.5	1.2	11103	13103	1250	15103	1000	17103	1100
0.012			11123	13123		15123		17123	
0.015			11153	13153		15153		17153	
0.018			11183	13183		15183		17183	
0.022			11223	13223		15223		17223	
0.027			11273	13273		15273		17273	
0.033			11333	13333		15333		17333	
0.039			11393	13393		15393		17393	
0.047			11473	13473		15473		17473	
0.056			11563	13563		15563		17563	
0.068			11683	13683		15683		17683	
0.082			11823	13823		15823		17823	
0.1			11104	13104		15104		17104	
0.12			10124	12124		14124		16124	
0.15	6.0 x 12.0 x 17.5	1.6	10154	12154	1000	14154		16154	900
0.18			10184	12184		14184		16184	
Pitch = 15.0 mm ± 0.4 mm; d_t = 0.80 mm ± 0.08 mm									
0.22	7.0 x 13.5 x 17.5	2.1	10224	12224	750	14224	500	16224	800
0.27			10274	12274		14274		16274	
0.33	8.5 x 15.0 x 17.5	2.8	10334	12334		14334		16334	650
0.39			10394	12394		14394		16394	
0.47	10.0 x 16.5 x 17.5	3.6	10474	12474	500	14474	450	16474	600

Notes

• SPQ = Standard Packing Quantity

(1) H = In-tape height; P_0 = Sprocket hole distance; for detailed specifications refer to packaging information

(2) Reel diameter = 356 mm is available on request

(3) Weight for short lead product only

Pitch: 15.0 mm; C-tol. = ± 5 %

C (µF)	DIMENSIONS w x h x l (mm)	MASS (g) (3)	CATALOG NUMBER BFC2 334 ..... AND PACKAGING						
			LOOSE IN BOX					REEL (500 mm) (1)(2)	
			Short leads			Long leads		H = 18.5 mm P_0 = 12.7 mm	
			l_t = 3.5 mm ± 0.3 mm	l_t = 5.0 mm ± 1.0 mm	SPQ	l_t = 25.0 mm ± 2.0 mm	SPQ		SPQ
Pitch = 15.0 mm ± 0.4 mm; d_t = 0.60 mm ± 0.06 mm									
0.01	5.0 x 11.0 x 17.5	1.2	51103	53103	1250	55103	1000	57103	1100
0.012			51123	53123		55123		57123	
0.015			51153	53153		55153		57153	
0.018			51183	53183		55183		57183	
0.022			51223	53223		55223		57223	
0.027			51273	53273		55273		57273	
0.033			51333	53333		55333		57333	
0.039			51393	53393		55393		57393	
0.047			51473	53473		55473		57473	
0.056			51563	53563		55563		57563	
0.068			51683	53683		55683		57683	
0.082			51823	53823		55823		57823	
0.1			51104	53104		55104		57104	
0.12			50124	52124		54124		56124	
0.15	6.0 x 12.0 x 17.5	1.6	50154	52154	1000	54154		56154	900
0.18			50184	52184		54184		56184	
Pitch = 15.0 mm ± 0.4 mm; d_t = 0.80 mm ± 0.08 mm									
0.22	7.0 x 13.5 x 17.5	2.1	50224	52224	750	54224	500	56224	800
0.27			50274	52274		54274		56274	
0.33	8.5 x 15.0 x 17.5	2.8	50334	52334		54334		56334	650
0.39			50394	52394		54394		56394	
0.47	10.0 x 16.5 x 17.5	3.6	50474	52474	500	54474	450	56474	600

Notes

• SPQ = Standard Packing Quantity

(1) H = In-tape height; P_0 = Sprocket hole distance; for detailed specifications refer to packaging information

(2) Reel diameter = 356 mm is available on request

(3) Weight for short lead product only

Pitch: 22.5 mm; C-tol. = ± 20 %

C (µF)	DIMENSIONS w x h x l (mm)	MASS (g) (1)	CATALOG NUMBER BFC2 334 ..... AND PACKAGING					
			LOOSE IN BOX					-
			Short leads			Long leads		
			l_t = 3.5 mm ± 0.3 mm	l_t = 5.0 mm ± 1.0 mm	SPQ	l_t = 25.0 mm ± 2.0 mm	SPQ	
Pitch = 22.5 mm ± 0.4 mm; d_t = 0.80 mm ± 0.08 mm								
0.15	6.0 x 15.5 x 26.0	2.9	21154	23154	300	25154	250	
0.22			21224	23224		25224		
0.33			21334	23334		25334		
0.47			21474	23474		25474		
0.68	8.5 x 18.0 x 26.0	5.0	20684	22684	200	24684	250	
1.0	10.0 x 19.5 x 26.0	6.6	20105	22105	200	24105	200	
1.5	12.0 x 22.0 x 26.0	8.8	20155	22155	200	24155	200	

Notes

• SPQ = Standard Packing Quantity

(1) Weight for short lead product only

Pitch: 22.5 mm; C-tol. = ± 10 %

C (µF)	DIMENSIONS w x h x l (mm)	MASS (g) (1)	CATALOG NUMBER BFC2 334 ..... AND PACKAGING					
			LOOSE IN BOX					-
			Short leads			Long leads		
			l_t = 3.5 mm ± 0.3 mm	l_t = 5.0 mm ± 1.0 mm	SPQ	l_t = 25.0 mm ± 2.0 mm	SPQ	
Pitch = 22.5 mm ± 0.4 mm; d_t = 0.80 mm ± 0.08 mm								
0.15	6.0 x 15.5 x 26.0	2.9	11154	13154	300	15154	250	
0.18			11184	13184		15184		
0.22			11224	13224		15224		
0.27			11274	13274		15274		
0.33			11334	13334		15334		
0.39			11394	13394		15394		
0.47	7.0 x 16.5 x 26.0	3.5	11474	13474	200	15474		
0.56			10564	12564		14564		
0.68	8.5 x 18.0 x 26.0	5.0	10684	12684		14684		
0.82			10824	12824		14824		
1.0	10.0 x 19.5 x 26.0	6.6	10105	12105		14105	200	
1.2	12.0 x 22.0 x 26.0	8.8	10125	12125	150	14125		

Notes

• SPQ = Standard Packing Quantity

(1) Weight for short lead product only

Pitch: 22.5 mm; C-tol = ± 5 %

C (µF)	DIMENSIONS w x h x l (mm)	MASS (g) (1)	CATALOG NUMBER BFC2 334 ..... AND PACKAGING					
			LOOSE IN BOX					-
			Short leads			Long leads		
			l_t = 3.5 mm ± 0.3 mm	l_t = 5.0 mm ± 1.0 mm	SPQ	l_t = 25.0 mm ± 2.0 mm	SPQ	
Pitch = 22.5 mm ± 0.4 mm; d_t = 0.80 mm ± 0.08 mm								
0.15	6.0 x 15.5 x 26.0	2.9	51154	53154	300	55154	250	
0.18			51184	53184		55184		
0.22			51224	53224		55224		
0.27			51274	53274		55274		
0.33			51334	53334		55334		
0.39			51394	53394		55394		
0.47	7.0 x 16.5 x 26.0	3.5	51474	53474	200	55474		
0.56			50564	52564		54564		
0.68	8.5 x 18.0 x 26.0	5.0	50684	52684		54684		
0.82			50824	52824		54824		
1.0	10.0 x 19.5 x 26.0	6.6	50105	52105		54105	200	
1.2	12.0 x 22.0 x 26.0	8.8	50125	52125	150	54125		

Notes

• SPQ = Standard Packing Quantity

(1) Weight for short lead product only

Pitch: 27.5 mm; C-tol. = ± 20 % - IN PROGRESS

C (µF)	DIMENSIONS w x h x l (mm)	MASS (g) (1)	CATALOG NUMBER BFC2 334 ..... AND PACKAGING				
			LOOSE IN BOX				
			Short leads			Long leads	
			l_t = 3.5 mm ± 0.3 mm	l_t = 5.0 mm ± 1.0 mm	SPQ	l_t = 25.0 mm ± 2.0 mm	SPQ
Pitch = 27.5 mm ± 0.4 mm; d_t = 0.80 mm ± 0.08 mm							
0.68	9.0 x 19.0 x 31.5	6.6	21684	23684	100	25684	150
1.0			21105	23105		25105	
1.5	11.0 x 21.0 x 31.0	8.6	21155	23155		25155	125
2.2	13.0 x 23.0 x 31.0	11.0	20225	22225		24225	

Notes

• SPQ = Standard Packing Quantity

(1) Weight for short lead product only

Pitch: 27.5 mm; C-tol. = ± 10 % - IN PROGRESS

C (µF)	DIMENSIONS w x h x l (mm)	MASS (g) (1)	CATALOG NUMBER BFC2 334 ..... AND PACKAGING				
			LOOSE IN BOX				
			Short leads			Long leads	
			l_t = 3.5 mm ± 0.3 mm	l_t = 5.0 mm ± 1.0 mm	SPQ	l_t = 25.0 mm ± 2.0 mm	SPQ
Pitch = 27.5 mm ± 0.4 mm; d_t = 0.80 mm ± 0.08 mm							
0.68	9.0 x 19.0 x 31.5	6.6	11684	13684	100	15684	150
0.82			11824	13824		15824	
1.0			11105	13105		15105	
1.2	11.0 x 21.0 x 31.0	8.6	11125	13125		15125	125
1.5			10155	12155		14155	
1.8	13.0 x 23.0 x 31.0	11.0	10185	12185		14185	
2.2	15.0 x 25.0 x 31.5	14.8	10225	12225		14225	

Notes

• SPQ = Standard Packing Quantity

(1) Weight for short lead product only

Pitch: 27.5 mm; C-tol. = ± 5 % - IN PROGRESS

C (µF)	DIMENSIONS w x h x l (mm)	MASS (g) (1)	CATALOG NUMBER BFC2 334 ..... AND PACKAGING				
			LOOSE IN BOX				
			Short leads			Long leads	
			l_t = 3.5 mm ± 0.3 mm	l_t = 5.0 mm ± 1.0 mm	SPQ	l_t = 25.0 mm ± 2.0 mm	SPQ
Pitch = 27.5 mm ± 0.4 mm; d_t = 0.80 mm ± 0.08 mm							
0.68	9.0 x 19.0 x 31.5	6.6	51684	53684	100	55684	150
0.82			51824	53824		55824	
1.0			51105	53105		55105	
1.2	11.0 x 21.0 x 31.0	8.6	51125	53125		55125	125
1.5			50155	52155		54155	
1.8	13.0 x 23.0 x 31.0	11.0	50185	52185		54185	
2.2	15.0 x 25.0 x 31.5	14.8	50225	52225		54225	

Notes

• SPQ = Standard Packing Quantity

(1) Weight for short lead product only

MOUNTING

Normal Use

The capacitors are designed for mounting on printed-circuit boards. The capacitors packed in bandoliers are designed for mounting in printed-circuit boards by means of automatic insertion machines.
For detailed tape specification refer to “Packaging Information” www.vishay.com/doc?28139

Specific Method of Mounting to Withstand Vibration and Shock

In order to withstand vibration and shock tests, it must be ensured that the stand-off pips are in good contact with the printed-circuit board:

- For pitches ≤ 15 mm capacitors shall be mechanically fixed by the leads
- For larger pitches the capacitors shall be mounted in the same way and the body clamped

Space Requirements on Printed Circuit Board

The maximum space for length ($l_{max.}$), width ($w_{max.}$) and height ($h_{max.}$) of film capacitors to take in account on the printed-circuit board is shown in the drawings.

- For products with pitch ≤ 15 mm, $\Delta w = \Delta l = 0.3$ mm; $\Delta h = 0.1$ mm
- For products with 15 mm < pitch ≤ 27.5 mm, $\Delta w = \Delta l = 0.5$ mm; $\Delta h = 0.1$ mm

Eccentricity defined as in drawing. The maximum eccentricity is smaller than or equal to the lead diameter of the product concerned.

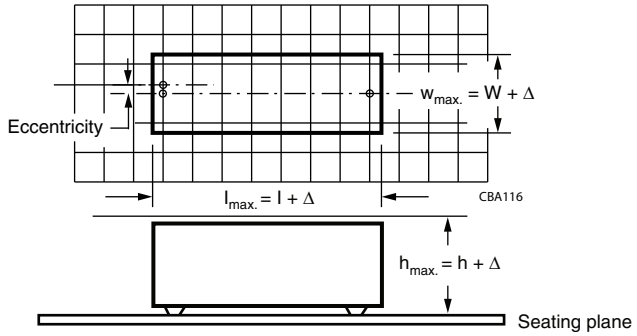

SOLDERING CONDITIONS

For general soldering conditions and wave soldering profile, we refer to the application note:
“Soldering Guidelines for Film Capacitors”: www.vishay.com/doc?28171

Storage Temperature

- Storage temperature: T_{stg} = - 25 °C to + 40 °C with RH maximum 80 % without condensation

Ratings and Characteristics Reference Conditions

Unless otherwise specified, all electrical values apply to an ambient temperature of 23 °C ± 1 °C, an atmospheric pressure of 86 kPa to 106 kPa and a relative humidity of 50 % ± 2 %.

For reference testing, a conditioning period shall be applied over 96 h ± 4 h by heating the products in a circulating air oven at the rated temperature and a relative humidity not exceeding 20 %.

CHARACTERISTICS

Capacitance change as a function of free air temperature (typical curve)

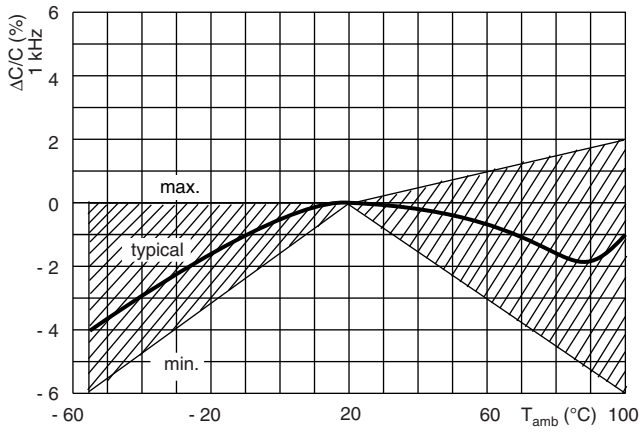

Capacitance change as a function of frequency (typical curve)

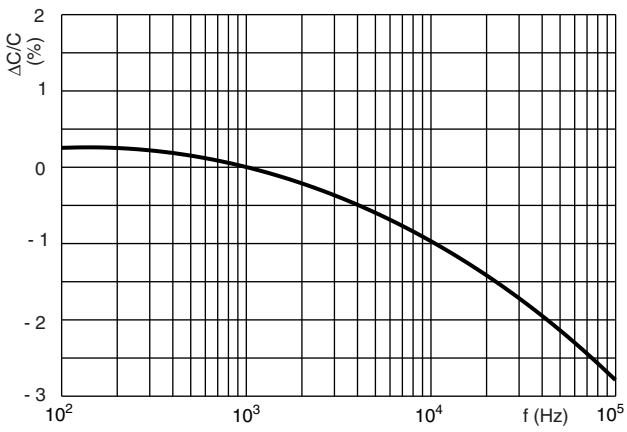

Tangent of loss angle as a function of frequency (typical curves)

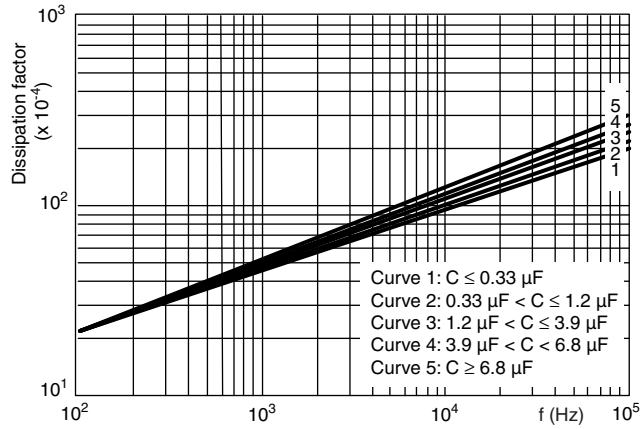

Insulation resistance (RC) as a function of ambient free air temperature (typical curve)

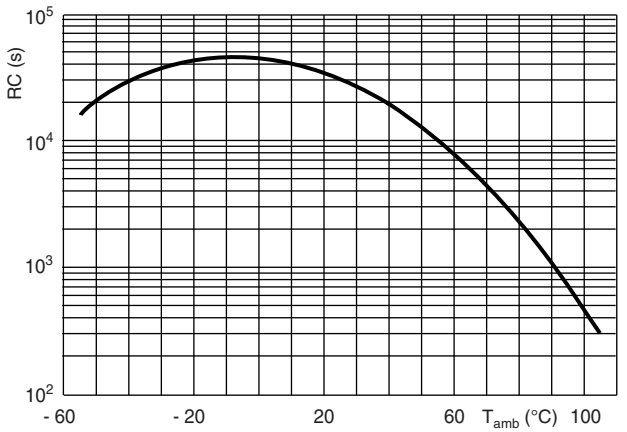

Max. RMS voltage (sine wave) as a function of frequency at $T_{amb} \leq 105$ °C

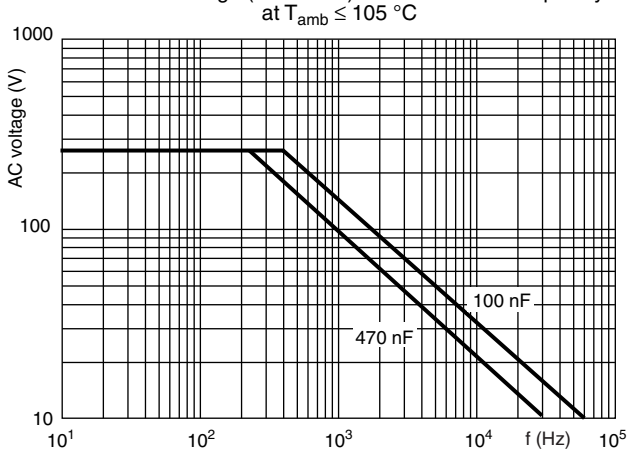

APPLICATION NOTES

- These capacitors are suitable for the application as voltage-division impedance in series with the mains (50 Hz/60 Hz) with a maximum mains voltage of U_{RAC}.
- For capacitors connected in parallel, normally the proof voltage and possibly the rated voltage must be reduced. For information depending of the capacitance value and the number of parallel connections contact: dc-film@vishay.com
- These capacitors are not suitable for mains applications as across-the-line capacitors without additional protection, as described under item 7. These mains applications are strictly regulated in safety standards and therefore electromagnetic interference suppression capacitors conforming the standards must be used.
- The peak voltage (U_p) shall not be greater than the permissible DC voltage (U_{RDC}).
- The peak-to-peak voltage (U_{p-p}) shall not be greater than $2\sqrt{2} \times U_{RAC}$ to avoid the ionization inception level.
- The voltage peak slope (dU/dt) shall not exceed the rated voltage pulse slope in an RC-circuit at rated voltage and without ringing. If the pulse voltage is lower than the rated DC voltage, the rated voltage pulse slope may be multiplied by U_{RDC} and divided by the applied voltage.

For all other pulses following equation must be fulfilled:

$$2 \times \int_0^T \left(\frac{dU}{dt}\right)^2 \times dt < U_{RDC} \times \left(\frac{dU}{dt}\right)_{rated}$$

- T is the pulse duration
- The rated voltage pulse slope is valid for ambient temperatures up to 105 °C.
- The maximum component surface temperature must be lower than 105 °C.
- Since in circuits used at voltages over 280 V peak-to-peak the risk for an intrinsically active flammability after a capacitor breakdown (short circuit) increases, it is recommended that the power to the component is limited to 100 times the values mentioned in the table: “Heat conductivity”. This is normally fulfilled by the impedance of the device in series with capacitor or by an additional resistor.

HEAT CONDUCTIVITY (G) AS A FUNCTION OF (ORIGINAL) PITCH AND CAPACITOR BODY THICKNESS IN mW/°C

$W_{max.}$ (mm)	HEAT CONDUCTIVITY (mW/°C)			
	Pitch 10 mm	Pitch 15 mm	Pitch 22.5 mm	Pitch 27.5 mm
4.0	6.0	-	-	-
4.5	-	-	-	-
5.0	7.5	10	-	-
6.0	9.0	11	19	-
7.0	-	12	21	-
8.5	-	16	25	-
9.0	-	-	-	30
10.0	-	18	28	33
11.0	-	-	-	36
12.0	-	-	31	-
13.0	-	-	-	42
15.0	-	-	-	48
18.0	-	-	-	57

INSPECTION REQUIREMENTS

General notes:

1. Sub-clause numbers of tests and performance requirements refer to the "Sectional Specification, Publication IEC 60384-14 ed-3 and Specific Reference Data".

Group C inspection requirements

SUB-CLAUSE NUMBER AND TEST	CONDITIONS	PERFORMANCE REQUIREMENTS
SUB-GROUP C1A PART OF SAMPLE OF SUB-GROUP C1		
4.1 Dimensions (detail)		As specified in chapters "General Data" of this specification
Initial measurements	Capacitance	
	Tangent of loss angle:	
	For C ≤ 1 µF at 10 kHz	
	For C > 1 µF at 1 kHz	
4.3 Robustness of terminations	Tensile: load 10 N; 10 s	No visible damage
	Bending: load 5 N; 4 x 90°	
4.4 Resistance to soldering heat	No pre-drying	
	Method: 1A	
	Solder bath: 280 °C ± 5 °C	
	Duration: 10 s	
4.19 Component solvent resistance	Isopropylalcohol at room temperature	
	Method: 2	
	Immersion time: 5 min ± 0.5 min	
	Recovery time:	
	Min. 1 h, max. 2 h	
4.4.2 Final measurements	Visual examination	No visible damage
		Legible marking
	Capacitance	¦ΔC/C¦ ≤ 5 % of the value measured initially.
	Tangent of loss angle	Increase of tan δ:
		≤ 0.008 for: C ≤ 1 µF or
		≤ 0.005 for: C > 1 µF
		Compared to values measured initially
	Insulation resistance	As specified in section "Specific Reference Data" of this specification
SUB-GROUP C1B PART OF SAMPLE OF SUB-GROUP C1		
Initial measurements	Capacitance	
	Tangent of loss angle:	
	For C ≤ 1 µF at 10 kHz	
	For C > 1 µF at 1 kHz	
4.20 Solvent resistance of the marking	Isopropylalcohol at room temperature	No visible damage
	Method: 1	Legible marking
	Rubbing material: cotton wool	
	Immersion time: 5 min ± 0.5 min	
4.6 Rapid change of temperature	θA = - 55 °C θB = + 105 °C 5 cycles	
	Duration t = 30 min	

SUB-CLAUSE NUMBER AND TEST	CONDITIONS	PERFORMANCE REQUIREMENTS
4.6.1 Inspection	Visual examination	No visible damage
4.7 Vibration	Mounting: see section “Mounting” of this specification	
	Procedure B4	
	Frequency range: 10 Hz to 55 Hz	
	Amplitude: 0.75 mm or	
	Acceleration 98 m/s²	
	(whichever is less severe)	
	Total duration 6 h	
4.7.2 Final inspection	Visual examination	No visible damage
4.9 Shock	Mounting: see section “Mounting” for more information	
	Pulse shape: half sine	
	Acceleration: 490 m/s²	
	Duration of pulse: 11 ms	
4.9.2 Final measurements	Visual examination	No visible damage
	Capacitance	¦ΔC/C¦ ≤ 5 % of the value measured initially.
	Tangent of loss angle	Increase of tan δ:
		≤ 0.008 for: C ≤ 1 µF or
		≤ 0.005 for: C > 1 µF
		Compared to values measured initially
	Insulation resistance	As specified in section “Specific Reference Data” of this specification
SUB-GROUP C1 COMBINED SAMPLE OF SPECIMENS OF SUB-GROUPS C1A AND C1B		
4.11 Climatic sequence		
4.11.1 Initial measurements	Capacitance	
	Measured in 4.4.2 and 4.9.2	
	Tangent of loss angle:	
	Measured initially in C1A and C1B	
4.11.2 Dry heat	Temperature: 105 °C Duration: 16 h	
4.11.3 Damp heat cyclic Test Db First cycle		
4.11.4 Cold	Temperature: - 55 °C Duration: 2 h	
4.11.5 Damp heat cyclic Test Db remaining cycles		
4.11.6 Final measurements	Visual examination	No visible damage Legible marking
	Capacitance	¦ΔC/C¦ ≤ 5 % of the value measured in 4.11.1.
	Tangent of loss angle	Increase of tan δ:
		≤ 0.008 for: C ≤ 1 µF or
		≤ 0.005 for: C > 1 µF
		Compared to values measured in 4.11.1.
	Voltage proof	No permanent breakdown or flash-over
	720 V_{DC}, 1 min between terminations	
	Insulation resistance	≥ 50 % of values specified in section “Specific Reference Data” of this specification

SUB-CLAUSE NUMBER AND TEST	CONDITIONS	PERFORMANCE REQUIREMENTS
SUB GROUP C2		
4.12 Damp heat steady state	56 days; 40 °C; 90 % to 95 % RH no load	
4.12.1 Initial measurements	Capacitance Tangent of loss angle: At 1 kHz	
4.12.3 Final measurements	Visual examination	No visible damage Legible marking
	Capacitance	¦ΔC/C¦ ≤ 5 % of the value measured in 4.12.1.
	Tangent of loss angle	Increase of tan δ: ≤ 0.008 for: C ≤ 1 µF or ≤ 0.005 for: C > 1 µF Compared to values measured in 4.12.1.
	Voltage proof 720 V_{DC}, 1 min between terminations	No permanent breakdown or flash-over
	Insulation resistance	≥ 50 % of values specified in section “Specific Reference Data” of this specification
SUB GROUP C2A		
4.12A Damp heat steady state	1000 h; 40 °C; 90 % to 95 % RH Loading voltage: 1 x U_{RAC}	
4.12.1A Initial measurements	Capacitance Tangent of loss angle: At 1 kHz	
4.12.3A Final measurements	Visual examination	No visible damage Legible marking
	Capacitance	¦ΔC/C¦ ≤ 5 % of the value measured in 4.12.1A.
	Tangent of loss angle	Increase of tan δ: ≤ 0.008 Compared to values measured in 4.12.1A.
	Voltage proof 720 V_{DC}; 1 min between terminations	No permanent breakdown or flash-over
	Insulation resistance	≥ 50 % of values specified in section “Specific Reference Data” of this specification
SUB-GROUP C3		
4.13.1 Initial measurements	Capacitance Tangent of loss angle: For C ≤ 1 µF at 10 kHz For C > 1 µF at 1 kHz	

SUB-CLAUSE NUMBER AND TEST	CONDITIONS	PERFORMANCE REQUIREMENTS
SUB-GROUP C3		
4.14 Endurance	Duration: 2000 h 1.25 x U_{RAC} at 105 °C	
4.14.7 Final measurements	Visual examination	No visible damage Legible marking
	Capacitance	¦ΔC/C¦ ≤ 5 % compared to values measured in 4.13.1.
	Tangent of loss angle	Increase of tan δ: ≤ 0.008 for: C ≤ 1 µF or ≤ 0.005 for: C > 1 µF Compared to values measured in 4.13.1.
	Voltage proof 720 V_{DC}, 1 min between terminations. 2050 V_{AC}, 1 min between terminations and case	No permanent breakdown or flash-over
	Insulation resistance	≥ 50 % of values specified in section “Specific Reference Data” of this specification
SUB-GROUP C4		
4.15 Charge and discharge	10 000 cycles Charged to 400 V_{DC} Discharge resistance: $R = \frac{400\ V_{DC}}{1.5 \times C\ (dU/dt)}$	
4.15.1 Initial measurements	Capacitance Tangent of loss angle: For C ≤ 1 µF at 10 kHz For C > 1 µF at 1 kHz	
4.15.3 Final measurements	Capacitance	¦ΔC/C¦ ≤ 10 % compared to values measured in 4.15.1.
	Tangent of loss angle	Increase of tan δ: ≤ 0.008 for: C ≤ 1 µF or ≤ 0.005 for: C > 1 µF Compared to values measured in 4.15.1.
	Insulation resistance	≥ 50 % of values specified in section “Specific Reference Data” of this specification

SUB-CLAUSE NUMBER AND TEST	CONDITIONS	PERFORMANCE REQUIREMENTS
SUB-GROUP C6		
4.17 Passive flammability Class B	Bore of gas jet: Ø 0.5 mm Fuel: butane Test duration for actual volume V in mm^3: $V \leq 250$: 10 s $250 < V \leq 500$: 20 s $500 < V \leq 1750$: 30 s $V > 1750$: 60 s One flame application 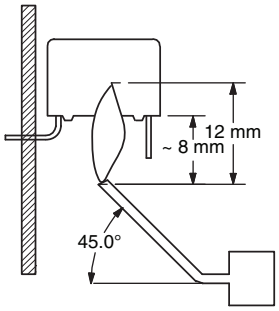 	After removing test flame from capacitor, the capacitor must not continue to burn for more than 10 s. No burning particle must drop from the sample.
SUB-GROUP C7		
4.18 Active flammability	20 x 1.2 kV discharges on the test capacitor connected to U_{RAC}	The cheese cloth around the capacitors shall not burn with a flame. No electrical measurements are required.

Disclaimer

ALL PRODUCT, PRODUCT SPECIFICATIONS AND DATA ARE SUBJECT TO CHANGE WITHOUT NOTICE TO IMPROVE RELIABILITY, FUNCTION OR DESIGN OR OTHERWISE.

Vishay Intertechnology, Inc., its affiliates, agents, and employees, and all persons acting on its or their behalf (collectively, “Vishay”), disclaim any and all liability for any errors, inaccuracies or incompleteness contained in any datasheet or in any other disclosure relating to any product.

Vishay makes no warranty, representation or guarantee regarding the suitability of the products for any particular purpose or the continuing production of any product. To the maximum extent permitted by applicable law, Vishay disclaims (i) any and all liability arising out of the application or use of any product, (ii) any and all liability, including without limitation special, consequential or incidental damages, and (iii) any and all implied warranties, including warranties of fitness for particular purpose, non-infringement and merchantability.

Statements regarding the suitability of products for certain types of applications are based on Vishay's knowledge of typical requirements that are often placed on Vishay products in generic applications. Such statements are not binding statements about the suitability of products for a particular application. It is the customer's responsibility to validate that a particular product with the properties described in the product specification is suitable for use in a particular application. Parameters provided in datasheets and / or specifications may vary in different applications and performance may vary over time. All operating parameters, including typical parameters, must be validated for each customer application by the customer's technical experts. Product specifications do not expand or otherwise modify Vishay's terms and conditions of purchase, including but not limited to the warranty expressed therein.

Hyperlinks included in this datasheet may direct users to third-party websites. These links are provided as a convenience and for informational purposes only. Inclusion of these hyperlinks does not constitute an endorsement or an approval by Vishay of any of the products, services or opinions of the corporation, organization or individual associated with the third-party website. Vishay disclaims any and all liability and bears no responsibility for the accuracy, legality or content of the third-party website or for that of subsequent links.

Vishay products are not designed for use in life-saving or life-sustaining applications or any application in which the failure of the Vishay product could result in personal injury or death unless specifically qualified in writing by Vishay. Customers using or selling Vishay products not expressly indicated for use in such applications do so at their own risk. Please contact authorized Vishay personnel to obtain written terms and conditions regarding products designed for such applications.

No license, express or implied, by estoppel or otherwise, to any intellectual property rights is granted by this document or by any conduct of Vishay. Product names and markings noted herein may be trademarks of their respective owners.

© 2025 VISHAY INTERTECHNOLOGY, INC. ALL RIGHTS RESERVED

THIS DOCUMENT IS SUBJECT TO CHANGE WITHOUT NOTICE. THE PRODUCTS DESCRIBED HEREIN AND THIS DOCUMENT ARE SUBJECT TO SPECIFIC DISCLAIMERS, SET FORTH AT www.vishay.com/doc?91000