LMKDB11xx PCIe Gen 1 to Gen 7 Ultra Low Jitter LP-HCSL Clock Buffer Family

1 Features

- LP-HCSL clock buffer and clock MUX that support:
  - PCIe Gen 1 to Gen 7
  - CC (Common Clock) and IR (Independent Reference) PCIe architectures
  - Input clock with or without SSC
- DB2000QL compliant:
  - All devices meet DB2000QL specifications
  - LMKDB1120 is pin-compatible to DB2000QL
- Extremely low additive jitter:
  - 31fs maximum 12kHz to 20MHz RMS additive jitter at 156.25MHz
  - 13fs maximum additive jitter for PCIe Gen 4
  - 5fs maximum additive jitter for PCIe Gen 5
  - 3fs maximum additive jitter for PCIe Gen 6
  - 2.1fs maximum additive jitter for PCIe Gen 7
- Fail-safe input
- Fail-safe outputs (LMKDB1120FS, LMKDB1108FS and LMKDB1104FS only)
- Flexible power-up sequence
- Automatic output disable
- Individual output enable
- SBI (Side Band Interface) for high-speed output enable or disable
- LOS (Loss of Signal) input detection
- 85Ω or 100Ω output impedance
- 1.8V / 3.3V ± 10% power supply
- –40°C to 105°C ambient temperature

2 Applications

- High Performance Computing
- Server Motherboard
- NIC/SmartNIC
- Hardware Accelerator

3 Description

The LMKDB devices are a family of extremely-low-jitter LP-HCSL buffers that support PCIe Gen 1 to Gen 7 and are DB2000QL compliant. The devices provide flexible power-up sequence, fail-safe inputs, fail-safe outputs, individual output active and inactive pins, loss of input signal (LOS) detection and automatic output disable features, as well as excellent power supply noise rejection performance.

Both 1.8V and 3.3V supply voltages are supported. For LMKDB1120, 1.8V power supply saves 250mW power compared to 3.3V.

Package Information

PART NUMBER	PACKAGE(1)	PACKAGE SIZE(2)
LMKDB1120 / LMKDB1120FS	NPP (TLGA, 80)	6mm × 6mm
LMKDB1108 / LMKDB1108FS	RKP (VQFN, 40)	5mm × 5mm
LMKDB1104 / LMKDB1104FS	REX (VQFN, 28)	4mm × 4mm
LMKDB1102	REY (VQFN, 20)	3mm × 3mm

(1) For all available packages, see Section 13.
(2) The package size (length × width) is a nominal value and includes pins, where applicable.

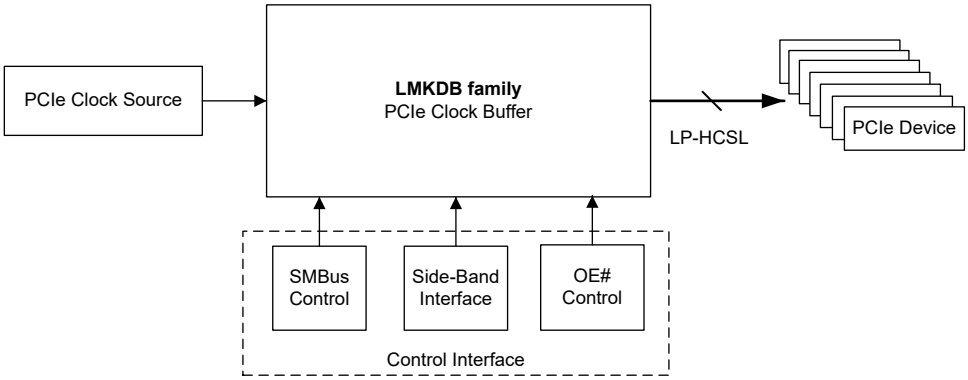

Typical Application

An IMPORTANT NOTICE at the end of this data sheet addresses availability, warranty, changes, use in safety-critical applications, intellectual property matters and other important disclaimers. PRODUCTION DATA.

Table of Contents

1 Features....1
2 Applications....1
3 Description....1
4 Device Comparison....3
5 Pin Configuration and Functions....4
6 Specifications....15
6.1 Absolute Maximum Ratings....15
6.2 ESD Ratings....15
6.3 Recommended Operating Conditions....15
6.4 Thermal Information....15
6.5 Electrical Characteristics....16
6.6 SMBus Timing Requirements....24
6.7 SBI Timing Requirements....24
6.8 Timing Diagrams....25
6.9 Typical Characteristics....26
7 Parameter Measurement Information....26
8 Detailed Description....28
8.1 Overview....28
8.2 Functional Block Diagram....28
8.3 Feature Description....29
8.4 Device Functional Modes....34
9 Register Maps....38
9.1 LMKDB1120 and LMKDB1120FS Registers....38
9.2 LMKDB1108 and LMKDB1108FS Registers....50
9.3 LMKDB1104 and LMKDB1104FS Registers....60
10 Application and Implementation....69
10.1 Application Information....69
10.2 Typical Application....69
10.3 Power Supply Recommendations....70
10.4 Layout....72
11 Device and Documentation Support....74
11.1 Documentation Support....74
11.2 Receiving Notification of Documentation Updates....74
11.3 Support Resources....74
11.4 Trademarks....74
11.5 Electrostatic Discharge Caution....74
11.6 Glossary....74
12 Revision History....74
13 Mechanical, Packaging, and Orderable Information....76

Copyright © 2025 Texas Instruments Incorporated

4 Device Comparison

Table 4-1. Device Comparison

PART NUMBER	Type	Input	Output	Output Impedance	Features
LMKDB1120Z85	Buffer	1	20	85Ω	All inputs fail-safe
LMKDB1120FS85	Buffer	1	20	85Ω	All inputs and outputs fail-safe
LMKDB1120Z100	Buffer	1	20	100Ω	All inputs fail-safe
LMKDB1116Z85 (1)	Buffer	1	16	85Ω	All inputs fail-safe
LMKDB1116Z100 (1)	Buffer	1	16	100Ω	All inputs fail-safe
LMKDB1113Z85 (1)	Buffer	1	13	85Ω	All inputs fail-safe
LMKDB1113Z100 (1)	Buffer	1	13	100Ω	All inputs fail-safe
LMKDB1112Z85 (1)	Buffer	1	12	85Ω	All inputs fail-safe
LMKDB1112Z100 (1)	Buffer	1	12	100Ω	All inputs fail-safe
LMKDB1108Z85	Buffer	1	8	85Ω	All inputs fail-safe
LMKDB1108FS85	Buffer	1	8	85Ω	All inputs and outputs fail-safe
LMKDB1108Z100	Buffer	1	8	100Ω	All inputs fail-safe
LMKDB1104Z85	Buffer	1	4	85Ω	All inputs fail-safe
LMKDB1104FS85	Buffer	1	4	85Ω	All inputs and outputs fail-safe
LMKDB1104Z100	Buffer	1	4	100Ω	All inputs fail-safe
LMKDB1102	Buffer	1	2	85Ω or 100Ω Selectable	All inputs fail-safe
LMKDB1216 (1)	Mux	2	16	85Ω or 100Ω Selectable	All inputs fail-safe
LMKDB1208 (1)	Mux	2	8	85Ω or 100Ω Selectable	All inputs fail-safe
LMKDB1204	Mux	2	4	85Ω or 100Ω Selectable	All inputs fail-safe
LMKDB1202	Mux	2	2	85Ω or 100Ω Selectable	All inputs fail-safe

(1) Preview only. Contact TI for more details.

Copyright © 2025 Texas Instruments Incorporated

5 Pin Configuration and Functions

Figure 5-1. LMKDB1120 and LMKDB1120FS 6mm × 6mm NPP Package 80 Pin TLGA Top View

Legend		
CLOCK INPUTS	CLOCK OUTPUTS	POWER
GND	LOGIC CONTROLS / STATUS	NO CONNECT

Table 5-1. LMKDB1120 and LMKDB1120FS Pin Functions

PIN		TYPE(1)	DESCRIPTION
NAME(2) (3)	NO.		
CLOCK INPUTS			
CLKIN_P	G1	I	Differential clock input.
CLKIN_N	H1	I	

Copyright © 2025 Texas Instruments Incorporated

Table 5-1. LMKDB1120 and LMKDB1120FS Pin Functions (continued)

PIN		TYPE[1]	DESCRIPTION
NAME[2] [3]	NO.		
CLOCK OUTPUTS			
CLK0_P	J1	O	LP-HCSL differential clock output 0. No connect if unused.
CLK0_N	K1	O	
CLK1_P	L1	O	LP-HCSL differential clock output 1. No connect if unused.
CLK1_N	M1	O	
CLK2_P	M2	O	LP-HCSL differential clock output 2. No connect if unused.
CLK2_N	M3	O	
CLK3_P	M4	O	LP-HCSL differential clock output 3. No connect if unused.
CLK3_N	M5	O	
CLK4_P	M7	O	LP-HCSL differential clock output 4. No connect if unused.
CLK4_N	M8	O	
CLK5_P	M9	O	LP-HCSL differential clock output 5. No connect if unused.
CLK5_N	M10	O	
CLK6_P	M11	O	LP-HCSL differential clock output 6. No connect if unused.
CLK6_N	M12	O	
CLK7_P	L12	O	LP-HCSL differential clock output 7. No connect if unused.
CLK7_N	K12	O	
CLK8_P	J12	O	LP-HCSL differential clock output 8. No connect if unused.
CLK8_N	H12	O	
CLK9_P	G12	O	LP-HCSL differential clock output 9. No connect if unused.
CLK9_N	F12	O	
CLK10_P	D12	O	LP-HCSL differential clock output 10. No connect if unused.
CLK10_N	C12	O	
CLK11_P	B12	O	LP-HCSL differential clock output 11. No connect if unused.
CLK11_N	A12	O	
CLK12_P	A11	O	LP-HCSL differential clock output 12. No connect if unused.
CLK12_N	A10	O	
CLK13_P	A9	O	LP-HCSL differential clock output 13. No connect if unused.
CLK13_N	A8	O	
CLK14_P	A7	O	LP-HCSL differential clock output 14. No connect if unused.
CLK14_N	A6	O	
CLK15_P	A5	O	LP-HCSL differential clock output 15. No connect if unused.
CLK15_N	A4	O	
CLK16_P	A3	O	LP-HCSL differential clock output 16. No connect if unused.
CLK16_N	A2	O	
CLK17_P	A1	O	LP-HCSL differential clock output 17. No connect if unused.
CLK17_N	B1	O	
CLK18_P	C1	O	LP-HCSL differential clock output 18. No connect if unused.
CLK18_N	D1	O	
CLK19_P	E1	O	LP-HCSL differential clock output 19. No connect if unused.
CLK19_N	F1	O	
POWER			
VDDA	H2	P	Analog power supply. Additional power supply filtering is recommended. See Section 10.3 for details.

Table 5-1. LMKDB1120 and LMKDB1120FS Pin Functions (continued)

PIN		TYPE[1]	DESCRIPTION
NAME[2] [3]	NO.		
VDDCLK	B2, B6, B11, L2, L11	P	Output power supply
Thermal Pad (GND)	Pad	G	Device Ground, Thermal pad.
LOGIC CONTROLS / STATUS			
vOE0#/NC	J2	I	Active low input to control CLK0. Internal pulldown resistor. This pin can be left no connect to match with DB2000QL pinout. 0 = Output Active, 1 = Output Inactive
vOE1#/NC	K2	I	Active low input to control CLK1. Internal pulldown resistor. This pin can be left no connect to match with DB2000QL pinout. 0 = Output Active, 1 = Output Inactive
vOE2#/NC	L3	I	Active low input to control CLK2. Internal pulldown resistor. This pin can be left no connect to match with DB2000QL pinout. 0 = Output Active, 1 = Output Inactive
vOE3#/NC	L6	I	Active low input to control CLK3. Internal pulldown resistor. This pin can be left no connect to match with DB2000QL pinout. 0 = Output Active, 1 = Output Inactive
vOE4#/NC	L9	I	Active low input to control CLK4. Internal pulldown resistor. This pin can be left no connect to match with DB2000QL pinout. 0 = Output Active, 1 = Output Inactive
vOE5#/SBI_IN	L8	I	Active low input to control CLK5 or SBI data input pin. SBI_EN pin controls function of this pin. Internal pulldown resistor. OE mode: 0 = Active output, 1 = Inactive output. Side-Band Mode: SBI data input.
vOE6#/SBI_CLK	L10	I	Active low input to control CLK6 or SBI clock input pin. SBI_EN pin controls function of this pin. Internal pulldown resistor. OE mode: 0 = Active output, 1 = Inactive output. Side-Band Mode: SBI clock input.
vOE7#	K11	I	Active low input to control CLK7. Internal pulldown resistor. 0 = Output Active, 1 = Output Inactive
vOE8#	H11	I	Active low input to control CLK8. Internal pulldown resistor. 0 = Output Active, 1 = Output Inactive
vOE9#	E12	I	Active low input to control CLK9. Internal pulldown resistor. 0 = Output Active, 1 = Output Inactive
vOE10#/SHFT_LD#	E11	I	Active low input to control CLK10 or SBI active low shift register load pin. SBI_EN pin controls function of this pin. Internal pulldown resistor. OE mode: 0 = Active output, 1 = Inactive output. Side-Band Mode: SBI shift register load input.
vOE11#	C11	I	Active low input to control CLK11. Internal pulldown resistor. 0 = Output Active, 1 = Output Inactive
vOE12#	B10	I	Active low input to control CLK12. Internal pulldown resistor. 0 = Output Active, 1 = Output Inactive
vOE13#/NC	B9	I	Active low input to control CLK13. Internal pulldown resistor. This pin can be left no connect to match with DB2000QL pinout. 0 = Output Active, 1 = Output Inactive
OE14#/NC	B7	I	Active low input to control CLK14. Internal pulldown resistor. This pin can be left no connect to match with DB2000QL pinout. 0 = Output Active, 1 = Output Inactive
vOE15#/NC	B5	I	Active low input to control CLK15. Internal pulldown resistor. This pin can be left no connect to match with DB2000QL pinout. 0 = Output Active, 1 = Output Inactive

Copyright © 2025 Texas Instruments Incorporated

Table 5-1. LMKDB1120 and LMKDB1120FS Pin Functions (continued)

PIN		TYPE(1)	DESCRIPTION
NAME(2) (3)	NO.		
vOE16#/NC	B3	I	Active low input to control CLK16. Internal pulldown resistor. This pin can be left no connect to match with DB2000QL pinout. 0 = Output Active, 1 = Output Inactive
vOE17#/NC	D2	I	Active low input to control CLK17. Internal pulldown resistor. This pin can be left no connect to match with DB2000QL pinout. 0 = Output Active, 1 = Output Inactive
vOE18#/NC	D11	I	Active low input to control CLK18. Internal pulldown resistor. This pin can be left no connect to match with DB2000QL pinout. 0 = Output Active, 1 = Output Inactive
vOE19#/NC	J11	I	Active low input to control CLK19. Internal pulldown resistor. This pin can be left no connect to match with DB2000QL pinout. 0 = Output Active, 1 = Output Inactive
SBI_OUT/NC	C2	O	SBI data output pin/No connect. This pin can be left no connect to match with DB2000QL pinout.
vPWRGD/PWRDN#	M6	I	Power Good/Power Down Active Low. Multifunctional input pin. Internal pullup resistor. On the first low-to-high transition, functions as Power Good pin which starts up the device On the subsequent low/high transitions, functions as Power Down Active Low pin which controls the device to enter or exit power-down mode. Low = power-down mode High = normal operation mode
vSBI_EN	E2	I	SBI Enable. Internal pulldown resistor. Do not change the state of this pin after power-up. Low at power-up = SBI interface disabled. Pin L8, L10 and E11 function as OE pins. High at power-up = SBI interface enabled. Pin L8, L10 and E11 function as SBI interface pins. SMBus and other OE pins remain functional.
^vSADR1_tri	B8	I	SMBus Address 3-level input pin. Internal pullup and pulldown resistors.
^vSADR0_tri	B4	I	SMBus Address 3-level input pin. Internal pullup and pulldown resistors.
LOS#/NC	G11	O	Loss of Input Clock Signal Active Low/No Connect. Open drain. Requires external pullup resistor. This pin can be left no connect to match with DB2000QL pinout. Low = Invalid input clock. High = Valid input clock.
SMB_DATA	L4	I/O	SMBus Data. Requires external pullup resistor. No connect if unused.
SMB_CLK	L5	I	SMBus Clock. Requires external pullup resistor. No connect if unused.
NC	F2, F11, G2, L7	NC	No connect.

(1) I = Input, O = Output, I/O = Input or Output, G = Ground, P = Power, NC = No Connect
(2) Pins with a "^" prefix have an internal pullup resistor. Pins with a "v" prefix have an internal pulldown resistor. Pins with a "^v" have an internal pullup resistor and an internal pulldown resistor so that mid level is selected when the pin is left floating. Pins with "^/v" have an internal pullup or pulldown based on selected function.
(3) The "#" symbol indicates active low.

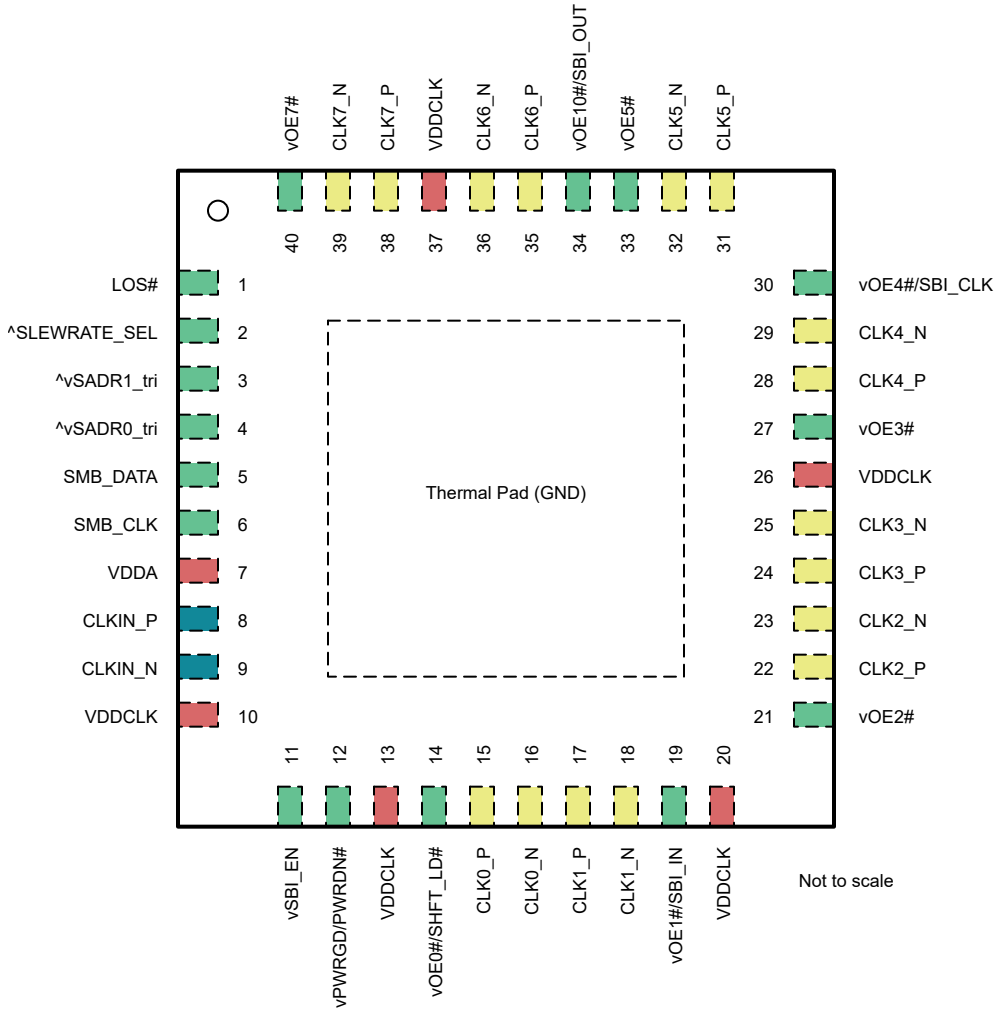

Figure 5-2. LMKDB1108 and LMKDB1108FS 5mm x 5mm VQFN Package 40 Pin Top View

Legend		
CLOCK INPUTS	CLOCK OUTPUTS	POWER
GND	LOGIC CONTROLS / STATUS	NO CONNECT

Table 5-2. LMKDB1108 and LMKDB1108FS Pin Functions

PIN		TYPE[1]	DESCRIPTION
NAME[2] [3]	NO.		
CLOCK INPUTS			
CLKIN_P	8	I	Differential clock input.
CLKIN_N	9	I	
CLOCK OUTPUTS			
CLK0_P	15	O	LP-HCSL differential clock output 0. No connect if unused.
CLK0_N	16	O	
CLK1_P	17	O	LP-HCSL differential clock output 1. No connect if unused.
CLK1_N	18	O	
CLK2_P	22	O	LP-HCSL differential clock output 2. No connect if unused.
CLK2_N	23	O	

Copyright © 2025 Texas Instruments Incorporated

Table 5-2. LMKDB1108 and LMKDB1108FS Pin Functions (continued)

PIN		TYPE[1]	DESCRIPTION
NAME[2] [3]	NO.		
CLK3_P	24	O	LP-HCSL differential clock output 3. No connect if unused.
CLK3_N	25	O	
CLK4_P	28	O	LP-HCSL differential clock output 4. No connect if unused.
CLK4_N	29	O	
CLK5_P	31	O	LP-HCSL differential clock output 5. No connect if unused.
CLK5_N	32	O	
CLK6_P	35	O	LP-HCSL differential clock output 6. No connect if unused.
CLK6_N	36	O	
CLK7_P	38	O	LP-HCSL differential clock output 7. No connect if unused.
CLK7_N	39	O	
POWER			
VDDA	7	P	Analog power supply. Additional power supply filtering is recommended. See Section 10.3 for details.
VDDCLK	10, 13, 20, 26, 37,	P	Output power supply
Thermal Pad (GND)	Pad	G	Device Ground, Thermal pad.
LOGIC CONTROLS / STATUS			
vOE0#/SHFT_LD#	14	I	Active low input to control CLK0 or SBI active low shift register load pin. SBI_EN pin controls function of this pin. Internal pulldown resistor. OE mode: 0 = Active output, 1 = Inactive output. Side-Band Mode: SBI latch register input.
vOE1#/SBI_IN	19	I	Active low input to control CLK1 or SBI data input pin. SBI_EN pin controls function of this pin. Internal pulldown resistor. OE mode: 0 = Active output, 1 = Inactive output. Side-Band Mode: SBI data input.
vOE2#	21	I	Active low input to control CLK2. Internal pulldown resistor. 0 = Output Active, 1 = Output Inactive
vOE3#	27	I	Active low input to control CLK3. Internal pulldown resistor. 0 = Output Active, 1 = Output Inactive
vOE4#/SBI_CLK	30	I	Active low input to control CLK4 or SBI clock input pin. SBI_EN pin controls function of this pin. Internal pulldown resistor. OE mode: 0 = Active output, 1 = Inactive output. Side-Band Mode: SBI clock input.
vOE5#	33	I	Active low input to control CLK5. Internal pulldown resistor. 0 = Output Active, 1 = Output Inactive
vOE10#/SBI_OUT	34	I or O	Active low input to control CLK6 or SBI data output pin. Internal pulldown resistor. SBI_EN pin controls function of this pin. OE mode:0 = Active output, 1 = Inactive output. SBI Mode: SBI shift register data output.
vOE7#	40	I	Active low input to control CLK7. Internal pulldown resistor. 0 = Output Active, 1 = Output Inactive
vPWRGD/PWRDN#	12	I	Power Good/Power Down Active Low. Multifunctional input pin. Internal pulldown resistor. On the first low-to-high transition, functions as Power Good pin which starts up the device On the subsequent low/high transitions, functions as Power Down Active Low pin which controls the device to enter or exit power-down mode. Low = power-down mode High = normal operation mode
vSBI_EN	11	I	SBI Enable. Internal pulldown resistor. Do not change the state of this pin after power-up. Low at power-up = SBI interface disabled. Pin 20, 32, 48 and 55 function as OE pins. High at power-up = SBI interface enabled. Pin 20, 32, 48 and 55 function as SBI interface pins. SMBus and other OE pins remain functional.

Copyright © 2025 Texas Instruments Incorporated

Table 5-2. LMKDB1108 and LMKDB1108FS Pin Functions (continued)

PIN		TYPE(1)	DESCRIPTION
NAME(2) (3)	NO.		
^vSADR1_tri	3	I	SMBus Address 3-level input pin. Internal pullup and pulldown resistors.
^vSADR0_tri	4	I	SMBus Address 3-level input pin. Internal pullup and pulldown resistors.
^SLEWRATE_SEL	2	I	LP-HCSL differential clock output slew rate select pin. Internal pullup resistor. Low = Slow slew rate. High = Fast slew rate.
LOS#	1	O	Loss of Input Clock Signal Active Low/No Connect. Open drain. Requires external pullup resistor. Low = Invalid input clock. High = Valid input clock.
SMB_DATA	5	I/O	SMBus Data. Requires external pullup resistor. No connect if unused.
SMB_CLK	6	I	SMBus Clock. Requires external pullup resistor. No connect if unused.

(1) I = Input, O = Output, I/O = Input or Output, G = Ground, P = Power, NC = No Connect
(2) Pins with a "^" prefix have an internal pullup resistor. Pins with a "v" prefix have an internal pulldown resistor. Pins with a "^v" have an internal pullup resistor and an internal pulldown resistor so that mid level is selected when the pin is left floating.
(3) The "#" symbol indicates active low.

Copyright © 2025 Texas Instruments Incorporated

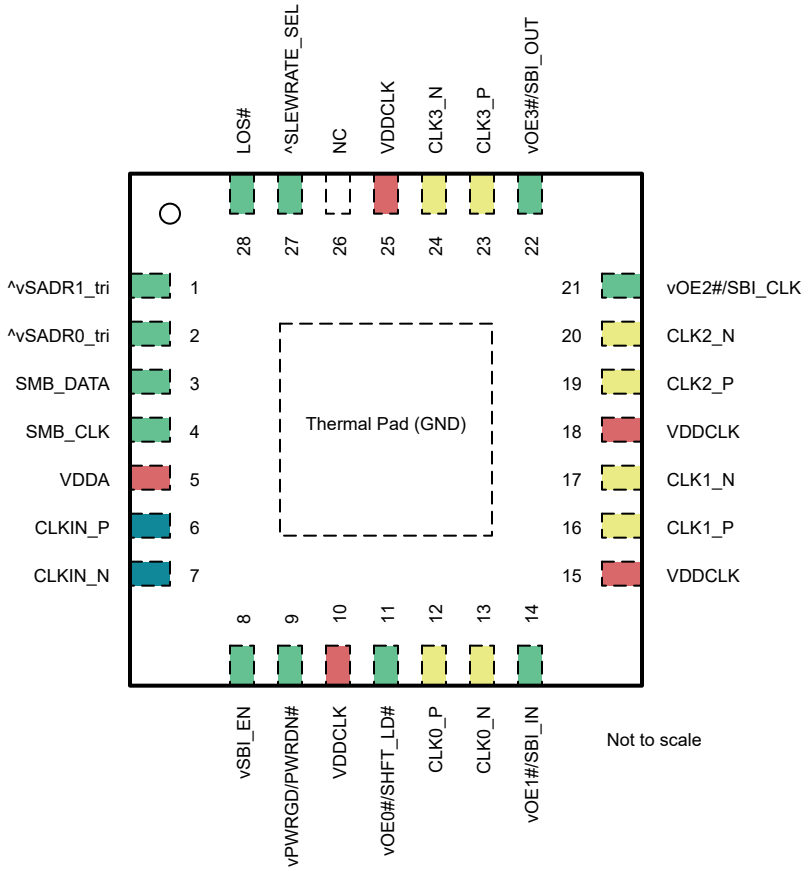

Figure 5-3. LMKDB1104 and LMKDB1104FS 4mm x 4mm VQFN Package 28 Pin Top View

Legend		
CLOCK INPUTS	CLOCK OUTPUTS	POWER
GND	LOGIC CONTROLS / STATUS	NO CONNECT

Table 5-3. LMKDB1104 and LMKDB1104FS Pin Functions

PIN		TYPE[1]	DESCRIPTION
NAME[2] [3]	NO.		
CLOCK INPUTS			
CLKIN_P	6	I	Differential clock input.
CLKIN_N	7	I	
CLOCK OUTPUTS			
CLK0_P	12	O	LP-HCSL differential clock output 0. No connect if unused.
CLK0_N	13	O	
CLK1_P	16	O	LP-HCSL differential clock output 1. No connect if unused.
CLK1_N	17	O	
CLK2_P	19	O	LP-HCSL differential clock output 2. No connect if unused.
CLK2_N	20	O	
CLK3_P	23	O	LP-HCSL differential clock output 3. No connect if unused.
CLK3_N	24	O	
POWER			
VDDA	5	P	Analog power supply. Additional power supply filtering is recommended. See Section 10.3 for details.

Table 5-3. LMKDB1104 and LMKDB1104FS Pin Functions (continued)

PIN		TYPE[1]	DESCRIPTION
NAME[2] [3]	NO.		
VDDCLK	10, 15, 18, 25	P	Output power supply
Thermal Pad (GND)	Pad	G	Device Ground, Thermal pad.
LOGIC CONTROLS / STATUS			
vOE0#/SHFT_LD#	11	I	Active low input to control CLK0 or SBI active low shift register load pin. SBI_EN pin controls function of this pin. Internal pulldown resistor. OE mode: 0 = Active output, 1 = Inactive output. Side-Band Mode: SBI latch register input.
vOE1#/SBI_IN	14	I	Active low input to control CLK1 or SBI data input pin. SBI_EN pin controls function of this pin. Internal pulldown resistor. OE mode: 0 = Active output, 1 = Inactive output. Side-Band Mode: SBI data input.
vOE2#/SBI_CLK	21	I	Active low input to control CLK2 or SBI clock input pin. SBI_EN pin controls function of this pin. Internal pulldown resistor. OE mode: 0 = Active output, 1 = Inactive output. Side-Band Mode: SBI clock input.
vOE3#/SBI_OUT	22	I or O	Active low input to control CLK3 or SBI data output pin. Internal pulldown resistor. SBI_EN pin controls function of this pin. OE mode:0 = Active output, 1 = Inactive output. SBI Mode: SBI shift register data output.
vPWRGD/PWRDN#	9	I	Power Good/Power Down Active Low. Multifunctional input pin. Internal pulldown resistor. On the first low-to-high transition, functions as Power Good pin which starts up the device On the subsequent low/high transitions, functions as Power Down Active Low pin which controls the device to enter or exit power-down mode. Low = power-down mode High = normal operation mode
vSBI_EN	8	I	SBI Enable. Internal pulldown resistor. Do not change the state of this pin after power-up. Low at power-up = SBI interface disabled. Pin 20, 32, 48 and 55 function as OE pins. High at power-up = SBI interface enabled. Pin 20, 32, 48 and 55 function as SBI interface pins. SMBus and other OE pins remain functional.
^vSADR1_tri	1	I	SMBus Address 3-level input pin. Internal pullup and pulldown resistors.
^vSADR0_tri	2	I	SMBus Address 3-level input pin. Internal pullup and pulldown resistors.
^SLEWRATE_SEL	27	I	LP-HCSL differential clock output slew rate select pin. Internal pullup resistor. Low = Slow slew rate. High = Fast slew rate.
LOS#	28	O	Loss of Input Clock Signal Active Low/No Connect. Open drain. Requires external pullup resistor. Low = Invalid input clock. High = Valid input clock.
SMB_DATA	3	I/O	SMBus Data. Requires external pullup resistor. No connect if unused.
SMB_CLK	4	I	SMBus Clock. Requires external pullup resistor. No connect if unused.
NC	26	NC	No connect.

(1) I = Input, O = Output, I/O = Input or Output, G = Ground, P = Power, NC = No Connect
(2) Pins with a "^" prefix have an internal pullup resistor. Pins with a "v" prefix have an internal pulldown resistor. Pins with a "^v" have an internal pullup resistor and an internal pulldown resistor so that mid level is selected when the pin is left floating.
(3) The "#" symbol indicates active low.

Copyright © 2025 Texas Instruments Incorporated

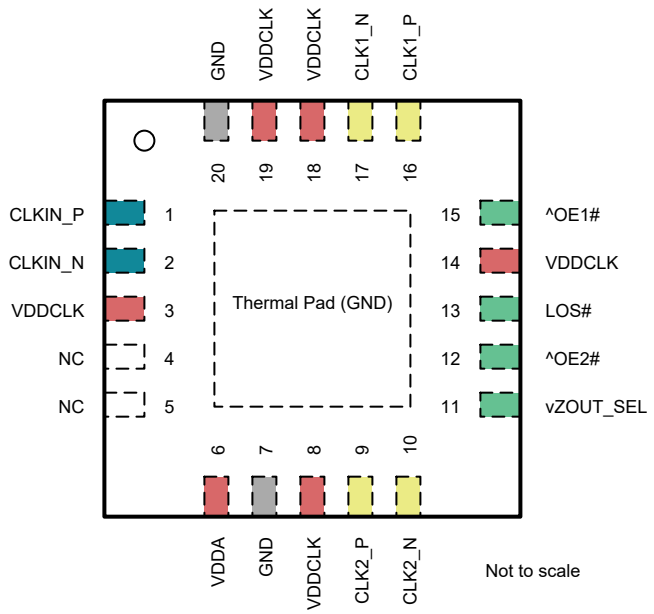

Figure 5-4. LMKDB1102 3mm x 3mm VQFN Package 20 Pin Top View

Legend		
CLOCK INPUTS	CLOCK OUTPUTS	POWER
GND	LOGIC CONTROLS / STATUS	NO CONNECT

Table 5-4. LMKDB1102 Pin Functions

PIN		TYPE[1]	DESCRIPTION
NAME[2] [3]	NO.		
CLOCK INPUTS			
CLKIN_P	1	I	Differential clock input.
CLKIN_N	2	I	
CLOCK OUTPUTS			
CLK1_P	16	O	LP-HCSL differential clock output 1. No connect if unused.
CLK1_N	17	O	
CLK2_P	9	O	LP-HCSL differential clock output 2. No connect if unused.
CLK2_N	10	O	
POWER			
VDDA	6	P	Analog power supply. Additional power supply filtering is recommended. See Section 10.3 for details.
VDDCLK	3, 8, 14, 18, 19	P	Output power supply
GND	7, 20	G	Device Ground, Thermal pad.
Thermal Pad (GND)	Pad	G	Device Ground, Thermal pad.
LOGIC CONTROLS / STATUS			
^OE1#	15	I	Active low input to control CLK1. Internal pullup resistor. 0 = Output Active, 1 = Output Inactive

Table 5-4. LMKDB1102 Pin Functions (continued)

PIN		TYPE(1)	DESCRIPTION
NAME(2) (3)	NO.		
^OE2#	12	I	Active low input to control CLK2. Internal pullup resistor. 0 = Output Active, 1 = Output Inactive
LOS#	13	O	Loss of Input Clock Signal Active Low/No Connect. Open drain. Requires external pullup resistor. Low = Invalid input clock. High = Valid input clock.
vZOUT_SEL	11	I	LP-HCSL differential clock output impedance select. Internal pulldown resistor. Low = 85Ω. High = 100Ω.
NC	4, 5	NC	No connect.

(1) I = Input, O = Output, I/O = Input or Output, G = Ground, P = Power, NC = No Connect
(2) Pins with a "^" prefix have an internal pullup resistor. Pins with a "v" prefix have an internal pulldown resistor. Pins with a "^v" have an internal pullup resistor and an internal pulldown resistor so that mid level is selected when the pin is left floating.
(3) The "#" symbol indicates active low.

Copyright © 2025 Texas Instruments Incorporated

6 Specifications

6.1 Absolute Maximum Ratings

over operating free-air temperature range (unless otherwise noted)[1]

		MIN	MAX	UNIT
V_{DDx}	Supply voltage on any VDD pin	–0.3	3.63	V
V_{IN}	Input voltage on CLKIN and digital input pins	–0.3	3.63	V
I_{OUT}	Output current - continuous (CLKOUT)		30	mA
	Output current - continuous (SMB_DATA, SBI_OUT)		25	mA
	Output current - surge (CLKOUT)		60	mA
	Output current - surge (SMB_DATA, SBI_OUT)		50	mA
T_S	Storage temperature	–65	150	℃

(1) Operation outside the Absolute Maximum Ratings may cause permanent device damage. Absolute Maximum Ratings do not imply functional operation of the device at these or any other conditions beyond those listed under Recommended Operating Conditions. If used outside the Recommended Operating Conditions but within the Absolute Maximum Ratings, the device may not be fully functional, and this may affect device reliability, functionality, performance, and shorten the device lifetime.

6.2 ESD Ratings

			VALUE	UNIT
$V_{(ESD)}$	Electrostatic discharge	Human body model (HBM), per ANSI/ESDA/JEDEC JS-001 [1]	±2000	V
		Charged-device model (CDM), per ANSI/ESDA/JEDEC JS-002 [2]	±500	

(1) JEDEC document JEP155 states that 500-V HBM allows safe manufacturing with a standard ESD control process.
(2) JEDEC document JEP157 states that 250-V CDM allows safe manufacturing with a standard ESD control process.

6.3 Recommended Operating Conditions

over operating free-air temperature range (unless otherwise noted)

		MIN	NOM	MAX	UNIT
T_J	Junction temperature			125	°C
T_A	Ambient temperature	–40		105	°C
V_{DD}	Power supply voltage	2.97	3.3	3.6	V
		1.71	1.8	1.89	V
V_{IN}	Input voltage on CLKIN and digital input pins	–0.3		3.6	V
t_{ramp}	Power ramping time	0.05		5	ms

6.4 Thermal Information

PACKAGE	PINS	THERMAL METRIC[1]						UNIT
		$R_{\theta JA}$	$R_{\theta JC(top)}$	$R_{\theta JB}$	Ψ_{JT}	Ψ_{JB}	$R_{\theta JC(bot)}$	
NPP0080 (TLGA)	80	33.1	31.9	16.2	0.5	16.0	1.8	°C/W
RKP0040 (VQFN)	40	33.6	24.6	13.8	0.4	13.7	4.2	°C/W
REX0028 (VQFN)	28	44.2	36.8	20.6	0.9	20.6	5.9	°C/W
REY0020 (VQFN)	20	46.4	50.4	20.3	1.1	20.3	6.5	°C/W

(1) For more information about traditional and new thermal metrics, see the Semiconductor and IC Package Thermal Metrics application note.

Copyright © 2025 Texas Instruments Incorporated

6.5 Electrical Characteristics

over operating free-air temperature range (unless otherwise noted)

PARAMETER		TEST CONDITIONS	MIN	TYP	MAX	UNIT
CLOCK INPUT REQUIREMENTS						
$V_{IN, cross}$	Clock input crossing point voltage		100		1400	mV
DC_{IN}	Clock input duty cycle		45		55	%
V_{IN}	Differential clock input amplitude (half of differential peak-peak voltage)	$f_0 \leq 300$ MHz	200		2000	mV
		300 MHz < $f_0 \leq 400$ MHz	250		2000	mV
dV_{IN}/dt	Clock input slew rate	Measured from –150 mV to +150 mV on the differential waveform	0.6			V/ns
CLOCK OUTPUT CHARACTERISTICS - 100 MHz 85 Ω PCIe						
$V_{OH,AC}$	Output voltage high	DB2000QL AC test load[6]	670		820	mV
$V_{OL,AC}$	Output voltage low		–100		100	mV
$V_{max,AC}$	Output max voltage (including overshoot)		670		920	mV
$V_{min,AC}$	Output min voltage (including undershoot)		–100		100	mV
$V_{OH,DC}$	Output voltage high with DC test load	DB2000QL DC test load[2]	225		270	mV
$V_{OL,DC}$	Output voltage low with DC test load		10		150	mV
$V_{ovs,DC}$	Output overshoot voltage with DC test load				75	mV
$V_{uds,DC}$	Output undershoot voltage with DC test load		–75			mV
Z_{diff}	Differential output impedance	Measured at V_{OL}/V_{OH}, V_{DD} = 3.3 V	80.75	85	89.25	Ω
		Measured at V_{OL}/V_{OH}, V_{DD} = 1.8 V	81	85	90	Ω
$Z_{diff-crossing}$	Differential output impedance - crossing	Measured during transition	68	85	102	Ω
dV/dt	Output slew rate	Measured from –150 mV to +150 mV on the differential waveform. Lowest slew rate[6] [7]	1.5		2.2	V/ns
		Measured from –150 mV to +150 mV on the differential waveform. Low slew rate[6] [7]	1.8		2.6	V/ns
		Measured from –150 mV to +150 mV on the differential waveform. High slew rate (default)[6] [7]	2		2.9	V/ns
		Measured from –150 mV to +150 mV on the differential waveform. Highest slew rate[6] [7]	2.4		4	V/ns
ΔdV/dt	Rising edge rate to falling edge rate matching	DB2000QL AC test load[6]			10	%
DCD	Duty cycle distortion	Measured on the differential waveform. Input duty cycle = 50%[6]	–1		1	%
$V_{cross,AC}$	Absolute crossing point voltage	DB2000QL AC test load[6]	250		550	mV
$V_{cross,DC}$	Absolute crossing point voltage	DB2000QL DC test load[2]	130		200	mV
$\Delta V_{cross,AC}$	Variation of V_{cross} over all clock edges	DB2000QL AC test load[6]			140	mV
$\Delta V_{cross-DC}$	Variation of V_{cross} over all clock edges	DB2000QL DC test load[2]			35	mV
$\|V_{RB}\|$	Absolute value of ring back voltage as defined in PCIe	DB2000QL AC test load[6]	100			mV
t_{stable}	Time before V_{RB} is allowed	DB2000QL AC test load[6]	500			ps
CLOCK OUTPUT CHARACTERISTICS - 100 MHz 100 Ω PCIe						
V_{max}	Output voltage high including overshoot	PCIe AC test load[1]	670		920	mV

Copyright © 2025 Texas Instruments Incorporated

6.5 Electrical Characteristics (continued)

over operating free-air temperature range (unless otherwise noted)

PARAMETER		TEST CONDITIONS	MIN	TYP	MAX	UNIT
V_{min}	Output voltage low including undershoot	PCIe AC test load[1]	–100		100	mV
V_{OH}	Output voltage high	PCIe AC test load[1]	670		820	mV
V_{OL}	Output voltage low	PCIe AC test load[1]	–100		100	mV
Z_{diff}	Differential output DC impedance	V_{DD} = 3.3 V	95	100	105	Ω
		V_{DD} = 1.8 V	95	100	105	Ω
dV/dt	Output slew rate	Measured from –150 mV to +150 mV on the differential waveform. Lowest slew rate[1] [7]	1.5		2.2	V/ns
		Measured from –150 mV to +150 mV on the differential waveform. Low slew rate[1] [7]	1.8		2.6	V/ns
		Measured from –150 mV to +150 mV on the differential waveform. High slew rate[1] [7]	2		2.9	V/ns
		Measured from –150 mV to +150 mV on the differential waveform. Highest slew rate[1] [7]	2.4		4	V/ns
ΔdV/dt	Rising edge rate to falling edge rate matching	PCIe AC test load[1]			10	%
DCD	Duty cycle distortion	Measured on the differential waveform. Input duty cycle = 50%[1]	–1		1	%
V_{cross}	Absolute crossing point voltage	PCIe AC test load[1]	250		550	mV
ΔV_{cross}	Variation of V_{cross} over all clock edges	PCIe AC test load[1]			140	mV
$\|V_{RB}\|$	Absolute value of ring back voltage as defined in PCIe	PCIe AC test load[1]	100			mV
t_{stable}	Time before V_{RB} is allowed	PCIe AC test load[1]	500			ps
CLOCK OUTPUT CHARACTERISTICS - non-PCIe						
V_{OH}	Output voltage high	Output swing programmed to 800 mV. f_0 = 156.25 MHz or 312.5 MHz	720		880	mV
V_{OL}	Output voltage low		–120		120	mV
V_{OH}	Output voltage high	Output swing programmed to 900 mV. f_0 = 156.25 MHz or 312.5 MHz	780		980	mV
V_{OL}	Output voltage low		–120		120	mV
t_R, t_F	Rise/fall time on single-ended waveform, 20% to 80%	Output swing programmed to 800 mV. Fastest slew rate. f_0 = 156.25 MHz or 312.5 MHz			340	ps
		Output swing programmed to 900 mV. Fastest slew rate. f_0 = 156.25 MHz or 312.5 MHz			370	ps
DCD	Duty cycle distortion	Input duty cycle = 50%	–1		1	%
CLOCK OUTPUT CHARACTERISTICS - 100 MHz 85 Ω PCIe (LMKDB1120FS, LMKDB1108FS, LMKDB1104FS)						
$V_{OH,AC}$	Output voltage high	DB2000QL AC test load[6]	670		820	mV
$V_{OL,AC}$	Output voltage low		–100		100	mV
$V_{max,AC}$	Output max voltage (including overshoot)		670		920	mV
$V_{min,AC}$	Output min voltage (including undershoot)		–100		100	mV
$V_{OH,DC}$	Output voltage high with DC test load	DB2000QL DC test load[2]	225		270	mV
$V_{OL,DC}$	Output voltage low with DC test load		10		150	mV
$V_{ovs,DC}$	Output overshoot voltage with DC test load				75	mV
$V_{uds,DC}$	Output undershoot voltage with DC test load		–75			mV

6.5 Electrical Characteristics (continued)

over operating free-air temperature range (unless otherwise noted)

PARAMETER		TEST CONDITIONS	MIN	TYP	MAX	UNIT
Z_{diff}	Differential output impedance	Measured at V_{OL}/V_{OH}, V_{DD} = 3.3 V	80.75	85	89.25	Ω
		Measured at V_{OL}/V_{OH}, V_{DD} = 1.8 V	81	85	90	Ω
Z_{diff}	Differential output impedance	Measured at V_{OL}/V_{OH}, V_{DD} = 3.3 V, T_A= 0°C to 105°C	80.75	85	89.25	Ω
		Measured at V_{OL}/V_{OH}, V_{DD} = 1.8 V, T_A= 0°C to 105°C	81	85	90	Ω
Z_{diff}	Differential output impedance	Min swing, V_{DD} = 3.3 V	80		88.5	Ω
Z_{diff}	Differential output impedance	Max swing, V_{DD} = 3.3 V	86.5		106.5	Ω
Z_{diff}	Differential output impedance	Min swing, V_{DD} = 1.8 V	80		89	Ω
Z_{diff}	Differential output impedance	Max swing, V_{DD} = 1.8 V	88		112.5	Ω
$Z_{diff-crossing}$	Differential output impedance - crossing	Measured during transition	68	85	102	Ω
dV/dt	Output slew rate	Min swing. Default slew rate setting	2.4		2.85	V/ns
dV/dt	Output slew rate	Max swing. Default slew rate setting	3.5		4.8	V/ns
dV/dt	Output slew rate	Measured from –150 mV to +150 mV on the differential waveform. Lowest slew rate(6) (7)	1.3		2.2	V/ns
		Measured from –150 mV to +150 mV on the differential waveform. Low slew rate(6) (7)	2.5		3	V/ns
		Measured from –150 mV to +150 mV on the differential waveform. High slew rate (default)(6) (7)	3		3.5	V/ns
		Measured from –150 mV to +150 mV on the differential waveform. Highest slew rate(6) (7)	2.4		4	V/ns
ΔdV/dt	Rising edge rate to falling edge rate matching	DB2000QL AC test load(6)			10	%
DCD	Duty cycle distortion	Measured on the differential waveform. Input duty cycle = 50%(6)	–1		1	%
$V_{cross,AC}$	Absolute crossing point voltage	DB2000QL AC test load(6)	250		550	mV
$V_{cross,DC}$	Absolute crossing point voltage	DB2000QL DC test load(2)	130		200	mV
$\Delta V_{cross,AC}$	Variation of V_{cross} over all clock edges	DB2000QL AC test load(6)			140	mV
$\Delta V_{cross-DC}$	Variation of V_{cross} over all clock edges	DB2000QL DC test load(2)			35	mV
$\lvert V_{RB}\rvert$	Absolute value of ring back voltage as defined in PCIe	DB2000QL AC test load(6)	100			mV
V_{RB}	Ring back voltage as defined in DB800ZL	DB2000QL AC test load(6)	–200		200	mV
t_{stable}	Time before V_{RB} is allowed	DB2000QL AC test load(6)	500			ps
CLOCK OUTPUT CHARACTERISTICS - non-PCIe (LMKDB1120FS, LMKDB1108FS, LMKDB1104FS)						
V_{OH}	Output voltage high	Output swing programmed to 800 mV. f_0 = 156.25 MHz or 312.5 MHz	720		890	mV
V_{OL}	Output voltage low		–120		120	mV
V_{OH}	Output voltage high	Output swing programmed to 900 mV. f_0 = 156.25 MHz or 312.5 MHz	780		980	mV
V_{OL}	Output voltage low		–120		120	mV

Copyright © 2025 Texas Instruments Incorporated

6.5 Electrical Characteristics (continued)

over operating free-air temperature range (unless otherwise noted)

PARAMETER		TEST CONDITIONS	MIN	TYP	MAX	UNIT
t_R, t_F	Rise/fall time on single-ended waveform, 20% to 80%	Output swing programmed to 800 mV. Fastest slew rate. f_0 = 156.25 MHz or 312.5 MHz			402	ps
		Output swing programmed to 900 mV. Fastest slew rate. f_0 = 156.25 MHz or 312.5 MHz			419	ps
DCD	Duty cycle distortion	Input duty cycle = 50%	–1		1	%
FREQUENCY AND TIMING CHARACTERISTICS						
f_0	Operating frequency	Automatic Output Disable functionality is disabled	1		400	MHz
		Automatic Output Disable functionality is enabled	25		400	MHz
$t_{startup}$	Startup time	Cold start. Measured from VDD valid (90% of final VDD) to output clock stable(3). Input clock is provided before VDD is valid. PWRGD_PWRDN# pin is tied to VDD. f_0 ≥ 100 MHz			0.4	ms
		Cold start. Measured from VDD valid (90% of final VDD) to output clock stable(3). Input clock is provided before VDD is valid. PWRGD_PWRDN# pin is tied to VDD. f_0 < 100 MHz			0.8	ms
t_{stable}	Clock stabilization time	VDD is stable. Measured from PWRGD assertion(4) to output clock stable. f_0 ≥ 100 MHz(3)			0.4	ms
		VDD is stable. Measured from PWRGD assertion(4) to output clock stable. f_0 < 100 MHz(3)			0.8	ms
$t_{PD\#}$	Powerdown deassertion time	Measured from PWRDN# deassertion(4) to output clock stable. f_0 ≥ 100 MHz(3)			0.15	ms
		Measured from PWRDN# deassertion(4) to output clock stable. f_0 < 100 MHz(3)			0.5	ms
t_{OE}	Output enable/disable time	Time elapsed from OE assertion/ deassertion(4) to output clock starts/stops	4		10	clk
$t_{LOS\text{-}assert}$	LOS# assertion time	Time elapsed from loss of input clock to LOS# assertion. f_0 < 100 MHz			120	ns
		Time elapsed from loss of input clock to LOS# assertion. f_0 ≥ 100 MHz			120	ns
$t_{LOS\text{-}deassert}$	LOS# deassertion time	Time elapsed from presence of input clock to LOS# deassertion. f_0 < 100 MHz			340	ns
		Time elapsed from presence of input clock to LOS# deassertion. f_0 ≥ 100 MHz			105	ns
t_{AOD}	Automatic output disable time	Time elapsed from LOS# assertion to output disable (both outputs are low/ low). f_0 < 100 MHz			0.07	ns
		Time elapsed from LOS# assertion to output disable (both outputs are low/low), f_0 ≥ 100 MHz			0.07	ns
t_{AOE}	Automatic output enable time	Time elapsed from LOS# deassertion to output clock stable. f_0 < 100 MHz(3)			115	ns
		Time elapsed from LOS# deassertion to output clock stable, f_0 ≥ 100 MHz(3)			22	ns
t_{switch}	Switch time	Switch between two 100MHz input clocks (MUX only)			70	ns

Copyright © 2025 Texas Instruments Incorporated

6.5 Electrical Characteristics (continued)

over operating free-air temperature range (unless otherwise noted)

PARAMETER		TEST CONDITIONS	MIN	TYP	MAX	UNIT
SKEW AND DELAY CHARACTERISTICS						
t_{skew}	Output-to-output skew	Same bank			50	ps
		Regardless of banks			50	ps
	Part-to-part skew				330	ps
t_{PD}	Input-to-output delay				1	ns
Δt_{PD}	Input-to-output delay variation	Single device over temperature and voltage			1.7	ps/°C
JITTER CHARACTERISTICS						
$J_{PCIe1-CC}$	PCIe Gen 1 CC jitter	Single clock input. Input slew rate ≥ 3.5 V/ns. Differential input swing ≥ 1600 mV			442.5	fs
$J_{PCIe2-CC}$	PCIe Gen 2 CC jitter				39	fs
$J_{PCIe3-CC}$	PCIe Gen 3 CC jitter				12.3	fs
$J_{PCIe4-CC}$	PCIe Gen 4 CC jitter				12.3	fs
$J_{PCIe5-CC}$	PCIe Gen 5 CC jitter				4.9	fs
$J_{PCIe6-CC}$	PCIe Gen 6 CC jitter				3	fs
$J_{PCIe7-CC}$	PCIe Gen 7 CC jitter				2.1	fs
$J_{PCIe2-IR}$	PCIe Gen 2 IR jitter				33.8	fs
$J_{PCIe3-IR}$	PCIe Gen 3 IR jitter				14.1	fs
$J_{PCIe4-IR}$	PCIe Gen 4 IR jitter				14.5	fs
$J_{PCIe5-IR}$	PCIe Gen 5 IR jitter				3.9	fs
$J_{PCIe6-IR}$	PCIe Gen 6 IR jitter				3	fs
$J_{PCIe7-IR}$	PCIe Gen 7 IR jitter				2.1	fs
$J_{PCIe1-CC}$	PCIe Gen 1 CC jitter	Single clock input. Input slew rate ≥ 1.5 V/ns. Differential input swing ≥ 800 mV			583.2	fs
$J_{PCIe2-CC}$	PCIe Gen 2 CC jitter				51.3	fs
$J_{PCIe3-CC}$	PCIe Gen 3 CC jitter				16	fs
$J_{PCIe4-CC}$	PCIe Gen 4 CC jitter				16	fs
$J_{PCIe5-CC}$	PCIe Gen 5 CC jitter				6.4	fs
$J_{PCIe6-CC}$	PCIe Gen 6 CC jitter				3.9	fs
$J_{PCIe7-CC}$	PCIe Gen 7 CC jitter				2.8	fs
$J_{PCIe2-IR}$	PCIe Gen 2 IR jitter				41.9	fs
$J_{PCIe3-IR}$	PCIe Gen 3 IR jitter				18.3	fs
$J_{PCIe4-IR}$	PCIe Gen 4 IR jitter				18.9	fs
$J_{PCIe5-IR}$	PCIe Gen 5 IR jitter				5.1	fs
$J_{PCIe6-IR}$	PCIe Gen 6 IR jitter				3.8	fs
$J_{PCIe7-IR}$	PCIe Gen 7 IR jitter				2.6	fs
$J_{DB2000QL}$	DB2000QL filter	Input slew rate ≥ 1.5 V/ns. Differential input swing ≥ 800 mV[6]		8.7	11.5	fs
		Input slew rate ≥ 3.5 V/ns. Differential input swing ≥ 1600 mV[6]		6.5	9	fs

Copyright © 2025 Texas Instruments Incorporated

6.5 Electrical Characteristics (continued)

over operating free-air temperature range (unless otherwise noted)

PARAMETER		TEST CONDITIONS	MIN	TYP	MAX	UNIT
$J_{RMS-additive}$	Additive 12 kHz to 20 MHz RMS jitter	f = 100 MHz, slew rate ≥ 3.5 V/ns		27.3	37.5	fs
		f = 100 MHz, slew rate ≥ 1.5 V/ns		37.4	48.5	fs
	Additive 12 kHz to 20 MHz RMS jitter	f = 156.25 MHz, slew rate ≥ 3.5 V/ns		21.9	31	fs
		f = 156.25 MHz, slew rate ≥ 1.5 V/ns		29.4	38.5	fs
	Additive 12 kHz to 70 MHz RMS jitter	f = 156.25 MHz, slew rate ≥ 3.5 V/ns		35.1	48.5	fs
		f = 156.25 MHz, slew rate ≥ 1.5 V/ns		47.1	60.5	fs
	Additive 12 kHz to 20 MHz RMS jitter	f = 312.5 MHz, slew rate ≥ 3.5 V/ns		19.3	28	fs
		f = 312.5 MHz, slew rate ≥ 1.5 V/ns		27.4	39.5	fs
	Additive 12 kHz to 70 MHz RMS jitter	f = 312.5 MHz, slew rate ≥ 3.5 V/ns		29.5	41.5	fs
		f = 312.5 MHz, slew rate ≥ 1.5 V/ns		40.7	58	fs
JITTER CHARACTERISTICS (LMKDB1120FS, LMKDB1108FS, LMKDB1104FS)						
$J_{PCIe1-CC}$	PCIe Gen 1 CC jitter	Single clock input. Input slew rate ≥ 3.5 V/ns. Differential input swing ≥ 1600 mV			453.5	fs
$J_{PCIe2-CC}$	PCIe Gen 2 CC jitter				44.5	fs
$J_{PCIe3-CC}$	PCIe Gen 3 CC jitter				12.8	fs
$J_{PCIe4-CC}$	PCIe Gen 4 CC jitter				12.8	fs
$J_{PCIe5-CC}$	PCIe Gen 5 CC jitter				5	fs
$J_{PCIe6-CC}$	PCIe Gen 6 CC jitter				3.1	fs
$J_{PCIe7-CC}$	PCIe Gen 7 CC jitter				2.2	fs
$J_{PCIe2-IR}$	PCIe Gen 2 IR jitter				39.5	fs
$J_{PCIe3-IR}$	PCIe Gen 3 IR jitter				14.15	fs
$J_{PCIe4-IR}$	PCIe Gen 4 IR jitter				14.65	fs
$J_{PCIe5-IR}$	PCIe Gen 5 IR jitter				4.1	fs
$J_{PCIe6-IR}$	PCIe Gen 6 IR jitter				3.4	fs
$J_{PCIe7-IR}$	PCIe Gen 7 IR jitter				2.4	fs
$J_{PCIe1-CC}$	PCIe Gen 1 CC jitter	Single clock input. Input slew rate ≥ 1.5 V/ns. Differential input swing ≥ 800 mV			599	fs
$J_{PCIe2-CC}$	PCIe Gen 2 CC jitter				54	fs
$J_{PCIe3-CC}$	PCIe Gen 3 CC jitter				16.8	fs
$J_{PCIe4-CC}$	PCIe Gen 4 CC jitter				16.8	fs
$J_{PCIe5-CC}$	PCIe Gen 5 CC jitter				6.6	fs
$J_{PCIe6-CC}$	PCIe Gen 6 CC jitter				4.1	fs
$J_{PCIe7-CC}$	PCIe Gen 7 CC jitter				3.9	fs
$J_{PCIe2-IR}$	PCIe Gen 2 IR jitter				48	fs
$J_{PCIe3-IR}$	PCIe Gen 3 IR jitter				18.3	fs
$J_{PCIe4-IR}$	PCIe Gen 4 IR jitter				18.9	fs
$J_{PCIe5-IR}$	PCIe Gen 5 IR jitter				5.3	fs
$J_{PCIe6-IR}$	PCIe Gen 6 IR jitter				4.1	fs
$J_{PCIe7-IR}$	PCIe Gen 7 IR jitter				2.9	fs
$J_{DB2000QL}$	DB2000QL filter	Input slew rate ≥ 1.5 V/ns. Differential input swing ≥ 800 mV[6]		9.2	12.5	fs
		Input slew rate ≥ 3.5 V/ns. Differential input swing ≥ 1600 mV[6]		7.4	10.2	fs

6.5 Electrical Characteristics (continued)

over operating free-air temperature range (unless otherwise noted)

PARAMETER		TEST CONDITIONS	MIN	TYP	MAX	UNIT
$J_{RMS-additive}$	Additive 12 kHz to 20 MHz RMS jitter	f = 100 MHz, slew rate ≥ 3.5 V/ns		30	41.5	fs
		f = 100 MHz, slew rate ≥ 1.5 V/ns		37.4	49.25	fs
	Additive 12 kHz to 20 MHz RMS jitter	f = 156.25 MHz, slew rate ≥ 3.5 V/ns		24.5	32	fs
		f = 156.25 MHz, slew rate ≥ 1.5 V/ns		29.4	40.2	fs
	Additive 12 kHz to 70 MHz RMS jitter	f = 156.25 MHz, slew rate ≥ 3.5 V/ns		40	49.5	fs
		f = 156.25 MHz, slew rate ≥ 1.5 V/ns		47.1	63.2	fs
	Additive 12 kHz to 20 MHz RMS jitter	f = 312.5 MHz, slew rate ≥ 3.5 V/ns		19.3	29	fs
		f = 312.5 MHz, slew rate ≥ 1.5 V/ns		24.6	42	fs
	Additive 12 kHz to 70 MHz RMS jitter	f = 312.5 MHz, slew rate ≥ 3.5 V/ns		29.5	42.5	fs
		f = 312.5 MHz, slew rate ≥ 1.5 V/ns		36	60	fs
SUPPLY CURRENT CHARACTERISTICS						
$I_{DD,total}$	LMKDB1102 total supply current	All outputs running, f_0 = 100 MHz			41	mA
$I_{DD,total}$	LMKDB1104FS total supply current	All outputs running, f_0 = 100 MHz			54	mA
$I_{DD,total}$	LMKDB1104 total supply current	All outputs running, f_0 = 100 MHz			54	mA
$I_{DD,total}$	LMKDB1108FS total supply current	All outputs running, f_0 = 100 MHz			85.7	mA
$I_{DD,total}$	LMKDB1108 total supply current	All outputs running, f_0 = 100 MHz			85.7	mA
$I_{DD,total}$	LMKDB1120FS total supply current	All outputs running, f_0 = 100 MHz			162	mA
$I_{DD,total}$	LMKDB1120 total supply current	All outputs running, f_0 = 100 MHz			162	mA
$I_{DD,core}$	LMKDB1102 core supply current	Pin PWRGD/PWRDN# = high, all outputs disabled			25.5	mA
$I_{DD,core}$	LMKDB1104FS core supply current	Pin PWRGD/PWRDN# = high, all outputs disabled			36.3	mA
$I_{DD,core}$	LMKDB1104 core supply current	Pin PWRGD/PWRDN# = high, all outputs disabled			25.5	mA
$I_{DD,core}$	LMKDB1108FS core supply current	Pin PWRGD/PWRDN# = high, all outputs disabled			36.3	mA
$I_{DD,core}$	LMKDB1108 core supply current	Pin PWRGD/PWRDN# = high, all outputs disabled			36.3	mA
$I_{DD,core}$	LMKDB1120FS core supply current	Pin PWRGD/PWRDN# = high, all outputs disabled			37.9	mA
$I_{DD,core}$	LMKDB1120 core supply current	Pin PWRGD/PWRDN# = high, all outputs disabled			37.9	mA
I_{DDO}	Output supply current per output (LMKDB1120FS, LMKDB1108FS, LMKDB1104FS)	f_0 = 100 MHz			6.9	mA
I_{DDO}	Output supply current per output (LMKDB1120FS, LMKDB1108FS, LMKDB1104FS)	f_0 = 400 MHz			9.7	mA
I_{DDO}	Output supply current per output	f_0 = 100 MHz			6.4	mA
		f_0 = 400 MHz			9.2	mA
I_{PD}	LMKDB1104, LMKDB1104FS, LMKDB1108, LMKDB1108FS, LMKDB1120FS and LMKDB1120 power down current	Pin PWRGD/PWRDN# = low			5.6	mA
PSNR CHARACTERISTICS						

Copyright © 2025 Texas Instruments Incorporated

6.5 Electrical Characteristics (continued)

over operating free-air temperature range (unless otherwise noted)

PARAMETER		TEST CONDITIONS	MIN	TYP	MAX	UNIT
PSNR	Power Supply Noise Rejection, V_{DD} = 3.3 V[5]	10 kHz noise ripple			–93	dBc
		50 kHz noise ripple			–91	dBc
		100 kHz noise ripple			–91	dBc
		500 kHz noise ripple			–95	dBc
		1 MHz noise ripple			–96	dBc
		5 MHz noise ripple			–111	dBc
		10 MHz noise ripple			–99	dBc
	Power Supply Noise Rejection, V_{DD} = 1.8 V[5]	10 kHz noise ripple			–85	dBc
		50 kHz noise ripple			–89	dBc
		100 kHz noise ripple			–91	dBc
		500 kHz noise ripple			–93	dBc
		1 MHz noise ripple			–94	dBc
		5 MHz noise ripple			–109	dBc
		10 MHz noise ripple			–97	dBc
I/O CHARACTERISTICS						
V_{IH}	Input voltage high	2-level logic input, V_{DD} = 3.3 V ± 10%	2		V_{DD} + 0.3	V
V_{IL}	Input voltage low		–0.3		0.8	V
V_{IH}	Input voltage high	3-level logic input, V_{DD} = 3.3 V ± 10%	2.4		V_{DD} + 0.3	V
V_{IM}	Input voltage mid		1.2		1.8	V
V_{IL}	Input voltage low		–0.3		0.8	V
V_{IH}	Input voltage high	2-level logic input, V_{DD} = 1.8 V ± 5%	1.3		V_{DD} + 0.3	V
V_{IL}	Input voltage low		–0.3		0.4	V
V_{IH}	Input voltage high	3-level logic input, V_{DD} = 1.8 V ± 5%	1.3		V_{DD} + 0.3	V
V_{IM}	Input voltage mid		0.65		0.95	V
V_{IL}	Input voltage low		–0.3		0.4	V
V_{OH}	Output high voltage	SBI_OUT, I_{OH} = -2 mA	2.4		V_{DD} + 0.3	V
V_{OL}	Output low voltage	SBI_OUT, I_{OL} = 2 mA			0.4	V
$I_{leakage}$	Output leakage current (LMKDB1120FS, LMKDB1108FS, LMKDB1104FS)	Output leakage current when outputs are connected to V_{DD} ± 10% while device is unpowered.			10	µA
I_{IN}	Input leakage current	CLKINx_P	–40		40	µA
		CLKINx_N	–40		40	µA
		single-ended inputs with internal pulldown	–30		30	µA
		single-ended inputs without internal pulldown	–5		5	µA
		3-level logic input	–30		30	µA
$R_{PU,PD}$	Internal pullup/pulldown resistor for single-ended inputs			120		kΩ
SMBUS ELECTRICAL CHARACTERISTICS						
V_{IH}	SMB_CLK, SMB_DATA input high voltage		0.8 × V_{DD}			V

6.5 Electrical Characteristics (continued)

over operating free-air temperature range (unless otherwise noted)

PARAMETER		TEST CONDITIONS	MIN	TYP	MAX	UNIT
V_{IL}	SMB_CLK, SMB_DATA input low voltage				0.3 × V_{DD}	V
V_{HYS}	Hysteresis of Schmitt Trigger Inputs		0.05 × V_{DD}			V
V_{OL}	SMB_DATA output low voltage	I_{OL} = 4 mA			0.4	V
I_{LEAK}	SMB_CLK, SMB_DATA input leakage		–10		10	µA
C_{PIN}	SMB_CLK, SMB_DATA pin capacitance				10	pF

(1) PCIe AC test load
(2) DB2000QL DC test load
(3) First clock edge is used for timing measurements. Clock outputs are muted until stabilized.
(4) For input pins, assertion or deassertion starts when the input voltage reaches the minimum voltage required for a "high" level, or the maximum voltage required for a "low" level
(5) All power supply pins are tied together. A 0.1µF capacitor is placed close to each power supply pin. 50 mVpp ripple is applied before the decoupling capacitors. Measure the spur level at the clock output
(6) DB2000QL AC test load
(7) Slew rate is highly dependent on PCB trace characteristics

6.6 SMBus Timing Requirements

		100-kHz CLASS		400-kHz CLASS		UNIT
		MIN	MAX	MIN	MAX	
f_{SMB}	SMBus Operating Frequency	10	100	10	400	kHz
f_{BUF}	Bus free time between STOP and START condition	4.7	–	1.3	–	µs
t_{HD_STA}	Hold time after (REPEATED) START condition	4.0	–	0.6	–	µs
t_{SU_STA}	REPEATED START condition setup time	4.7	–	0.6	–	µs
t_{SU_STO}	STOP condition setup time	4.0	–	0.6	–	µs
t_{HD_DAT}	Data hold time	0	–	0	–	ns
t_{SU_DAT}	Data setup time	250	–	100	–	ns
$t_{TIMEOUT}$	Detect clock low timeout	25	35	25	35	ms
t_{LOW}	Clock low period	4.7	–	1.3	–	µs
t_{HIGH}	Clock high period	4.0	50	0.6	50	µs
t_{LOW_SEXT}	Cumulative clock low extend time (secondary device)	–	25	–	25	ms
t_{LOW_PEXT}	Cumulative clock low extend time (primary device)	–	10	–	10	ms
t_F	Clock/Data Fall Time	–	300	–	300	ns
t_R	Clock/Data Rise Time	–	1000	–	300	ns
t_{SPIKE}	Noise spike suppression time	–	–	0	50	ns
t_{POR}	Time in which a device must be operational after power-on reset		500		500	ms

6.7 SBI Timing Requirements

		MIN	MAX	UNIT
t_{PERIOD}	Clock period	40	–	ns
t_{SETUP}	SHFT setup to SBI_CLK rising edge	10	–	ns
t_{DSU}	SBI_IN data setup to SBI_CLK rising edge	5	–	ns
t_{DHOLD}	SBI_IN data hold after SBI_CLK rising edge	2	–	ns

Copyright © 2025 Texas Instruments Incorporated

		MIN	MAX	UNIT
t_{DOUT}	SBI_CLK rising edge to SBI_OUT data valid	2	–	ns
t_{LD}	CLK rising edge to LD# falling edge	10	–	ns
t_{OE}	Delay from LD# falling edge to output enable/disable taking effect	4	10	clocks
t_{SLEW}	SBI_CLK 20% to 80% slew rate	0.7	4	V/ns

6.8 Timing Diagrams

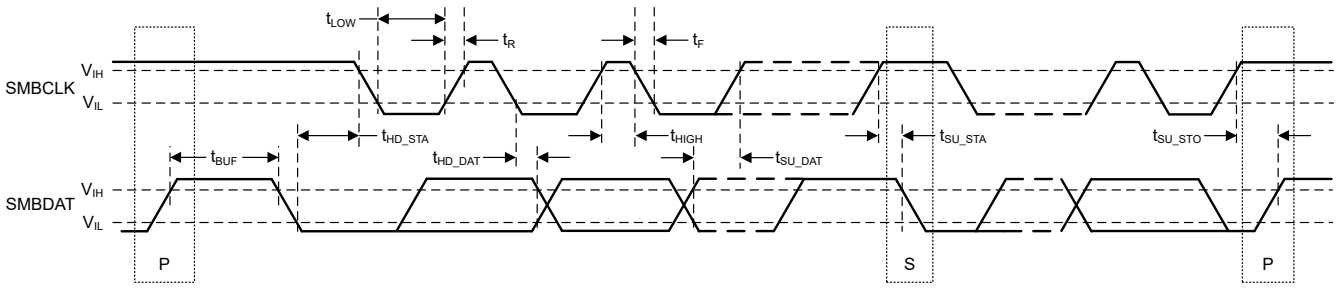

Figure 6-1. SMBus Timing Diagram

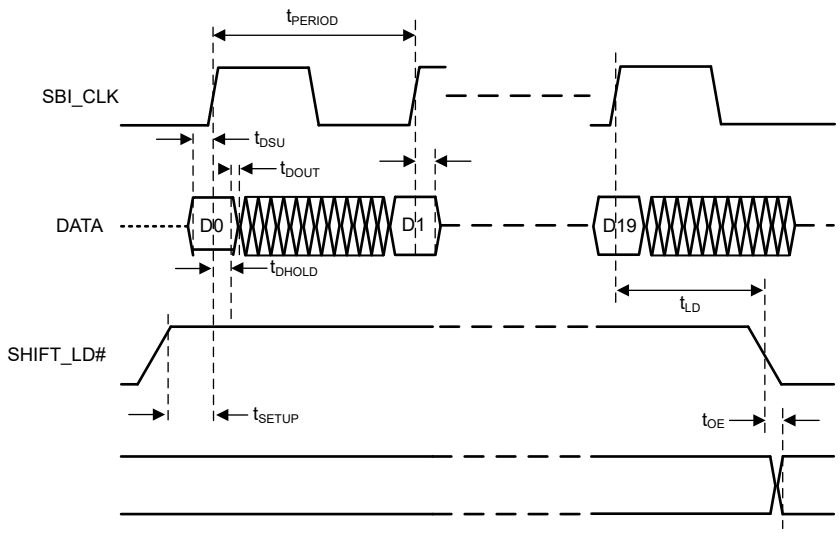

Figure 6-2. SBI Timing Diagram

6.9 Typical Characteristics

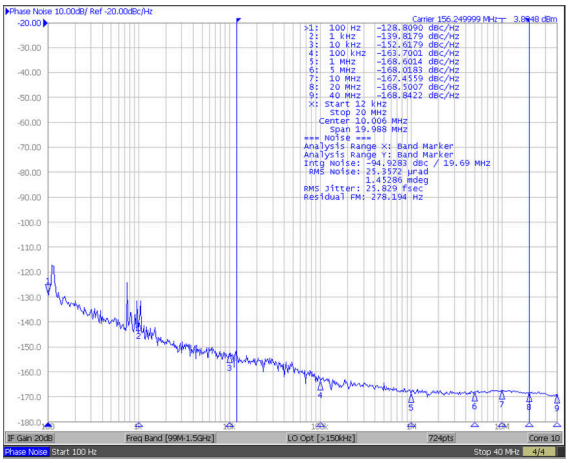

Figure 6-3. Input Source at 156.25MHz (12kHz - 20MHz)

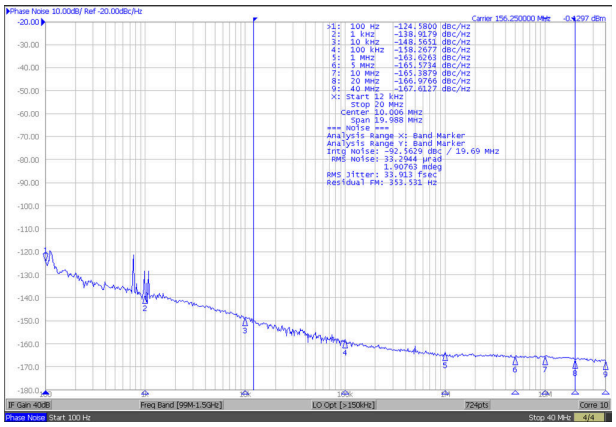

See Note 1 and 2 in Graph Notes table

Figure 6-4. LMKDB11xx Phase Noise / Output Jitter at 156.25MHz (12kHz - 20MHz)

Table 6-1. Graph Notes

NOTE	
(1)	The typical RMS jitter values in the plots show the total output RMS jitter (J_{OUT}) for each frequency and the source clock RMS jitter (J_{SOURCE}). From these values, the Additive RMS Jitter can be calculated as: J_{ADD} = SQRT($J_{OUT}{}^2 - J_{SOURCE}{}^2$).
(2)	J_{ADD} at 156.25MHz = SQRT(33.9^2- 25.8^2) = 22.0fs

7 Parameter Measurement Information

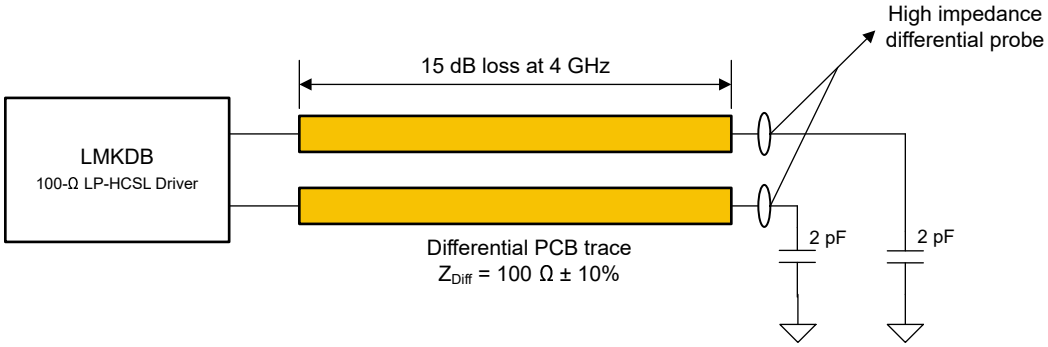

Figure 7-1. PCIe AC Test Load

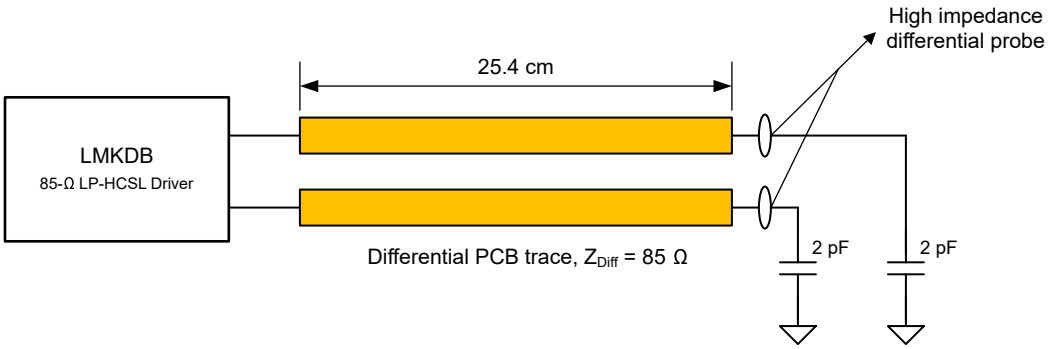

Figure 7-2. DB2000QL AC Test Load

Copyright © 2025 Texas Instruments Incorporated

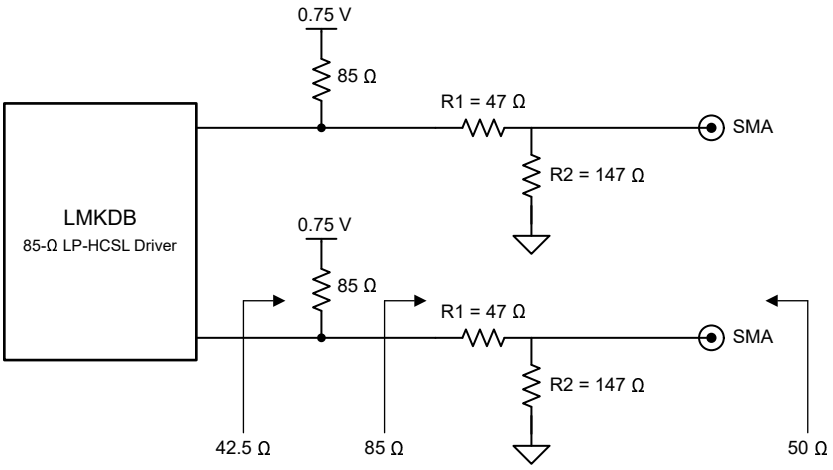

Figure 7-3. DB2000QL DC Test Load

8 Detailed Description

8.1 Overview

LMKDB11xx are DB2000QL compliant clock buffers that distribute LP-HCSL clocks designed for PCIe Gen 1 through 7 applications with ultra-low additive jitter and ultra-low propagation delay. The LMKDB11xx buffer devices allow for enough jitter margin for the entire clock path mainly required for PCIe Gen 5, Gen 6 and Gen 7 buffer cascading and Ethernet fan-out applications. The LMKDB11xx also support both 1.8V and 3.3V supply voltages for better design flexibility.

LMKDB11xx have individual OE controls for all outputs, which provides more design flexibility. Each output of each device also has programmable slew rate, programmable output amplitude swing, and automatic output disable. The devices support 100Ω or 85Ω LP-HCSL and fail-safe inputs and outputs denoted by the part number as shown in Section 4, with output frequencies of up to 400MHz.

LMKDB11xx have pin mode, SMBus mode, and Side Band Interface (SBI) mode, which can all be used at the same time. Refer to Section 5 for more details one each option available on specific device. SBI enables or disables output clocks at a much faster speeds (up to 25MHz) as compared to SMBus. Furthermore, because both SBI and SMBus can operate at the same time, SMBus can still be used to take over device control and readback status after power-up. For more details please refer to Section 8.4

Refer to Section 8 for the detailed descriptions of the devices pins and the *Register Map* for more details on the device registers.

8.2 Functional Block Diagram

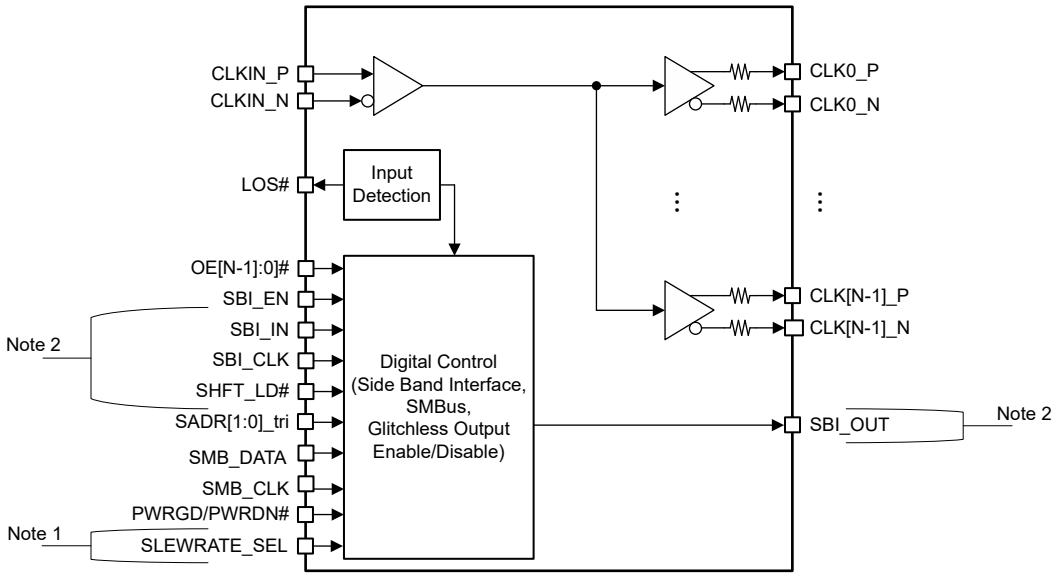

N = Number of output channels
1. LMKDB1116/13/12/8/4 only. Other devices support SMBus.
2. Some devices mux SBI with OE# pins. Refer to specific device pinouts.
3. This diagram doesn't apply to LMKDB1102.

Figure 8-1. LMKDB11xx Functional Block Diagram

Copyright © 2025 Texas Instruments Incorporated

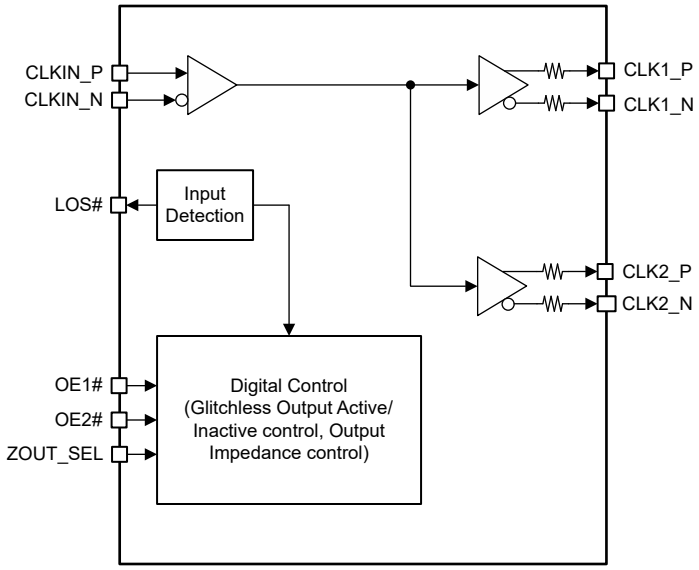

Figure 8-2. LMKDB1102 Functional Block Diagram

8.3 Feature Description

8.3.1 Input Features

8.3.1.1 Running Input Clocks When Device is Powered Off

The device supports running input clocks when power is off. This is different than the fail-safe feature where the input can be pulled to static VDD when device power is off. This is useful if clock inputs are available before power is provided to the clock buffer.

8.3.1.2 Fail-Safe Inputs

All clock input pins and digital input pins support fail-safe. Fail-safe means a pin can be driven to VDD when device power is off, without causing any leakage or reliability problem. For example, an OE# pin can be driven to VDD before device power is up so that the output stays muted until the OE# pin goes low, sometime after power-up.

8.3.1.3 Input Configurations

LMKDB11xx devices input buffer stage supports four different configurations:

- DC coupled HCSL inputs.
- DC coupled LVDS input signal with external 100Ω termination resistor.
- AC coupled inputs with internal self-bias. See AC-Coupled or DC-Coupled Clock Inputs for more details.
- Internal 50Ω to ground terminations. See Internal Termination for Clock Inputs for more details.

All the devices with two inputs have individual AC coupling and input termination option. To configure each input, refer to register map for configuration bits.

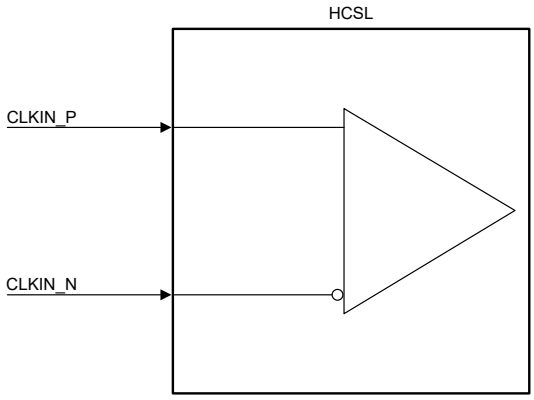

Figure 8-3. HCSL Input Interface (PCIe Standard)

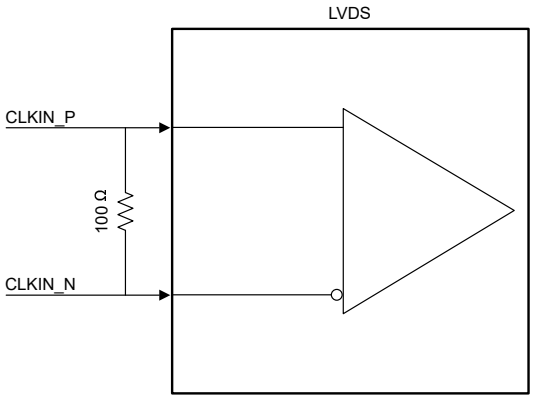

Figure 8-4. LVDS Input Interface

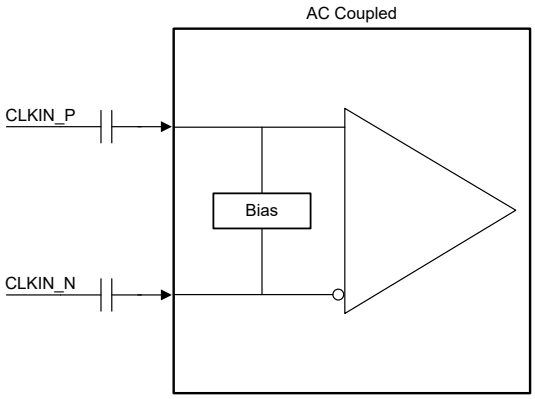

Figure 8-5. External AC-Coupled Input

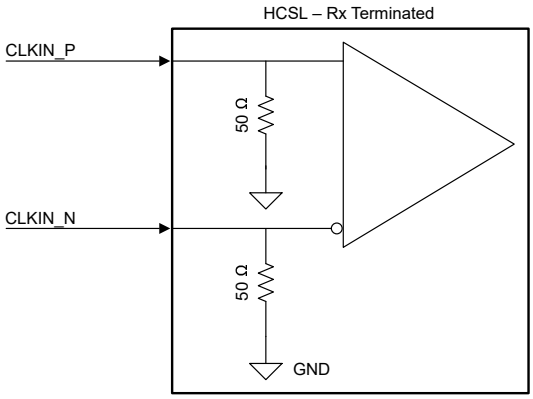

Figure 8-6. Receiver Internal Terminations

8.3.1.3.1 Internal Termination for Clock Inputs

There is an option to enable 50Ω internal termination for differential clock input. For LP-HCSL input, disable the internal termination. For HCSL input, enable internal termination if external termination is not provided. The internal termination is disabled by default.

8.3.1.3.2 AC-Coupled or DC-Coupled Clock Inputs

Input clocks can be either AC coupled or DC coupled. If the inputs are DC coupled, the input signal swing levels must match those in Specifications under the *CLOCK INPUT REQUIREMENTS*. Also, register RX_EN_AC_INPUT must be set to 0 for DC-coupled inputs or set to 1 for AC-coupled inputs. Refer to the *Register Map* for more information about RX_EN_AC_INPUT.

8.3.2 Flexible Power Sequence

8.3.2.1 PWRDN# Assertion and Deassertion

In the recommended power down sequence, PWRDN# is asserted while input clocks are valid. Make sure to hold the PWRDN# pin at low level for two consecutive rising edges of the input clock cycle. As a result, all clock outputs are muted to low/low (OUTx_P = Low, OUTx_N = Low) without a glitch. Following any other sequence brings the device to an undefined mode and can cause glitches or invalid outputs - for example, if PWRGD/PWRDN# is pulled low after the input clock is removed, the device enters a glitch state, where the output gets stuck low (but **only** if the PWRGD/PWRDN# pin is not moved back from low to high before the CLKIN signal is turned back on). If PWRGD/PWRDN# is pulled back to high before the CLKIN signal returns, there are no issues.

8.3.2.2 OE# Assertion and Deassertion

OE# pins can be asserted and deasserted at anytime, whether:

Copyright © 2025 Texas Instruments Incorporated

- Device power supply is on or off
- PWRGD/PWRDN# pin is pulled high or low
- Clock input is valid or invalid

The OE# pins only take effect if all below conditions are met:
1. The clock input is valid
2. The PWRGD/PWRDN# pin is high
3. The device power is up

Otherwise outputs are always muted and OE# assertion and deassertion has no impact.

If OE# pins become low in any of the below conditions:
1. Input clock is invalid
2. PWRGD/PWRDN# pin is low
3. Device power is off

Then when all below conditions are met:
1. The clock input is valid
2. The PWRGD/PWRDN# pin is high
3. The device power is up

Outputs are enabled without any glitch (assuming register OE and SBI OE are active).

8.3.2.3 Clock Input and PWRGD/PWRDN# Behaviors When Device Power is Off

Input clocks can be running, floating, low/low or pulled to VDD when device power is off, regardless of PWRGD/PWRDN# pin states (low, high, low-to-high transition and high-to-low transition). Table 8-1 shows all the supported sequences; where clock input can be applied before or after VDD is applied.

Table 8-1. Flexible Power-up Sequences

VDD	PWRGD/PWRDN#	CLKIN_P/CLKIN_N
Not Present	X	Running
		Floating
		Low / Low
Present	0 or 1	Running
		Floating
		Low / Low

8.3.3 LOS and OE

8.3.3.1 Additional OE# Pins for LMKDB1120 and Backward Compatibility

The DB2000QL specification only defines 8 OE# pins. In the LMKDB1120, 12 additional OE# pins are added so that each of the 20 outputs has a dedicated OE# pin. This provides additional design flexibility. The LMKDB1120 is backward pin-compatible with DB2000QL because all OE# pins have internal pulldown resistor. When left floating, these additional OE# pins have no impact (OE# pins are active low), because the three types of OE controls follow the AND logic.

8.3.3.2 Synchronous OE

Outputs are enabled and disabled synchronously. Synchronous OE means when an output is enabled or disabled, there is no glitch or runt pulse at the output.

8.3.3.3 OE Control

OE (Output Enable) can enable or disable a certain output. Three types of OE controls are supported: OE pin, OE register bit through SMBus, and OE control through SBI. The three controls follow the AND logic. An output is enabled only if all three controls enable that output. If any control disables that output, that output is disabled.

8.3.3.4 Automatic Output Disable

Automatic Output Disable (AOD) is enabled by default, and can be disabled through SMBus. When input clock becomes invalid and LOS# is active, output clocks are muted to low/low (OUTx_P = Low, OUTx_N = Low). Before LOS# is active and after input clock becomes invalid (because LOS detection takes time), output clocks stay at a steady state following the last input state. For example, if the input clock stopped at low/high, then output clocks first stay at low/high, then muted to low/low once LOS# is active.

8.3.3.5 LOS Detection

LOS (Loss Of input Signal) detects whether the clock input is valid or not. When input clock is valid, LOS# register bit = 1 and LOS# pin = high. When input clock is invalid, LOS register bit = 0 and LOS# pin = low.

At power-up, the LOS# pin is kept low until input is detected valid. Therefore, the LOS# pin can be used for the timing of OE# insertion and other operations.

The LOS# signal is only effective if PWRGD/PWRDN# pin is high. If this pin is low, then LOS# is low regardless of input validness

8.3.4 Output Features

8.3.4.1 Double Termination

For regular PCIe applications, LP-HCSL outputs do not require external termination, but the LMKDB family does support double termination (this is uncommon). In that case, an external 50Ω termination is placed and the swing is halved. This results additional power consumption as well due to 50Ω termination to ground on the output.

8.3.4.2 Programmable Output Slew Rate

The LMKDB family offers slew rate control options through SMBus and pin modes. The pin mode option is global slew rate control for all the outputs. SMBus slew rate control supports programmable output slew rate for each individual output. The slew rate is heavily dependent on trace characteristics including trace width, copper thickness, substrate height, dielectric constant, and loss tangent.

LMKDB slew rate control settings are tested with PCIe test load shown in Figure 7-1.

8.3.4.2.1 Slew Rate Control through Pin

The LMKDB11xx offer a global slew rate control pin for specific devices. Refer to Section 5 for details on slew rate pin on each device. The pin can be set to low for slow slew rate setting and high for high slew rate. Table 8-2 provides more information on the slew rate control option through pin mode.

Table 8-2. Pin Mode Slew Rate Control

Pin Status	Slew Rate Setting	Slew Rate Range (V/ns)
Low	Low	1.8 - 2.6
High	High	2 - 2.9

8.3.4.2.2 Slew Rate Control through SMBus

The LMKDB1120 has 16 different slew rates options that can be assigned to the outputs. 0x0 is the fastest slew rate setting and 0xF is the slowest slew rate setting. To set the slew rate of each output, follow these steps:

1. There are four different registers, SLEWRATE_OPT#, that can store up to four different slew rates. Select your desired slew rates by assigning a value from 0x0 (fastest) to 0xF (slowest) to each SLEWRATE_OPT# register. The default values set to each SLEWRATE_OPT# register can be found in Table 8-3.

Copyright © 2025 Texas Instruments Incorporated

a. For example, if you wanted the fastest, second fastest, and the slowest slew rate, assign 0x0, 0x1, and 0xF to registers SLEWRATE_OPT#. SLEWRATE_OPT1 = 0x0 (fastest), SLEWRATE_OPT2 = 0x1 (second fastest), and SLEWRATE_OPT3 = 0xF (slowest). SLEWRATE_OPT4 does not have to be assigned, but if you want more than one register set to a slew rate, then SLEWRATE_OPT4 can be assigned to any of the three previous settings.

2. Set a slew rate option for each output by using the SLEWRATE_SEL_CLKX_LSB and SLEWRATE_SEL_CLKX_MSB as shown in Table 8-3 or drop-down menus under the Output Slew Rate Control Section in TICSPro. The default SLEWRATE_OPT# register assignment for all outputs is SLEWRATE_OPT2, which has a default slew rate of 0x6.

The corresponding ranges for the four default slew rates can be found in Section 6 under *CLOCK OUTPUT CHARACTERISTICS - 100MHz 85Ω PCIe* or *CLOCK OUTPUT CHARACTERISTICS - 100MHz 100Ω PCIe* for the specification *Output slew rate*.

Table 8-3. LMKDB11xx Default SLEWRATE_OPT_# Values

Register Field Name	Default Value	Default Slew Rate
SLEWRATE_OPT_1	0x0	Highest
SLEWRATE_OPT_2	0x6	High (default for all outputs)
SLEWRATE_OPT_3	0xA	Low
SLEWRATE_OPT_4	0xF	Lowest

Table 8-4. LMKDB11xxFS Default SLEWRATE_OPT_# Values

Register Field Name	Default Value	Default Slew Rate
SLEWRATE_OPT_1	0x0	Highest
SLEWRATE_OPT_2	0x2	High (default for all outputs)
SLEWRATE_OPT_3	0x6	Low
SLEWRATE_OPT_4	0xF	Lowest

Table 8-5. SLEWRATE_SEL_CLKX_LSB & SLEWRATE_SEL_CLKX_MSB Slew Rate Selection

SLEWRATE_SEL_CLKX_LSB	SLEWRATE_SEL_CLKX_MSB	Slew Rate Option Selection
0	0	SLEWRATE_OPT_4
1	0	SLEWRATE_OPT_3
0	1	SLEWRATE_OPT_2
1	1	SLEWRATE_OPT_1

To program the slew rate to the desired slew rate, the following sequence needs to be followed:

1. [Optional]: if the default assignments shown in Table 8-3 for each slew rate speed is not as desired, one of the slew rate options value can be changed to another slew rate.
2. [LMKDB1108 and 1104 only]: Program SLEWRATE_CTRL_MODE register to 1 to select SMBus programming mode for slew rate control. Refer to Section 9 section for LMKDB1108 and LMKDB1104 register bits information.
3. Program SLEWRATE_SEL_CLKX_MSB and SLEWRATE_SEL_CLKX_LSB to assign clock output X to desired slew rate speed option, as shown in Table 8-5. The default assignments for each option can be found in Table 8-3.

8.3.4.3 Programmable Output Swing

The LMKDB family supports programmable LP-HCSL swings between a range of 600mV to 975mV. All outputs are programmed to the same output swing via register AMP and AMP_BANKX for both buffer and mux respectively. To program the outputs to the desired swing refer to the Register Maps.

8.3.4.4 Accurate Output Impedance

The LMKDB family supports both 100Ω LP-HCSL and 85Ω LP-HCSL. The output impedance is accurately trimmed to ±5%. This helps improve impedance matching and clock signal integrity.

8.3.4.5 Programmable Output Impedance

The LMKDB1102 offers pin mode option to select 100Ω or 85Ω LP-HCSL output impedance provides flexibility in design. Output impedance can be selected using ZOUT_SEL pin on the device as shown in Table 8-6. If left floating, 85Ω output impedance is selected by default through an internal pulldown resistor.

Table 8-6. Programmable Output Impedance

ZOUT_SEL	Output Impedance
Low	85Ω
High	100Ω

8.3.4.6 Fail-Safe Outputs

LMKDB110x with suffix "FS" devices as listed in Device Comparison have fail-safe outputs. Fail-safe means outputs can be driven to VDD when device power is off without causing any leakage or reliability problem. This feature provides additional flexibility in design for clock output routing on FLEXIO pins in the system.

8.4 Device Functional Modes

8.4.1 SMBus Mode

In SMBus mode, LMKDB11xx device SMBus registers can be written and read through SMBus pins. Pin SADR1 and SADR0 set the SMBus address.

SADR1	SADR0	8-Bit SMBus Address (R/W Bit = 0)
Low	Low	0xD8
Low	Float	0xDA
Low	High	0xDE
Float	Low	0xC2
Float	Float	0xC4
Float	High	0xC6
High	Low	0xCA
High	Float	0xCC
High	High	0xCE

Table 8-7. Command Code Definition

BIT	DESCRIPTION
7	0 = *Block Read* or *Block Write* operation 1 = *Byte Read* or *Byte Write* operation
(6:0)	Register address for *Byte* operations, or starting register address for *Block*, operations

Copyright © 2025 Texas Instruments Incorporated

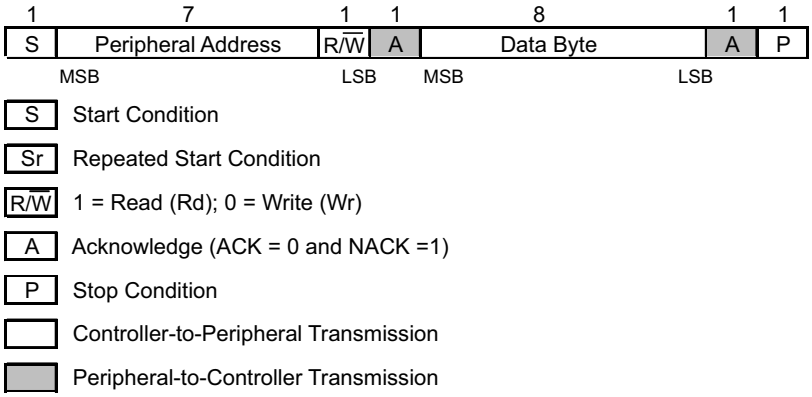

Figure 8-7. Generic Programming Sequence

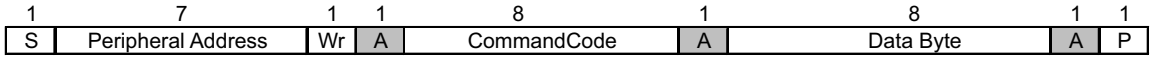

Figure 8-8. Byte Write Protocol

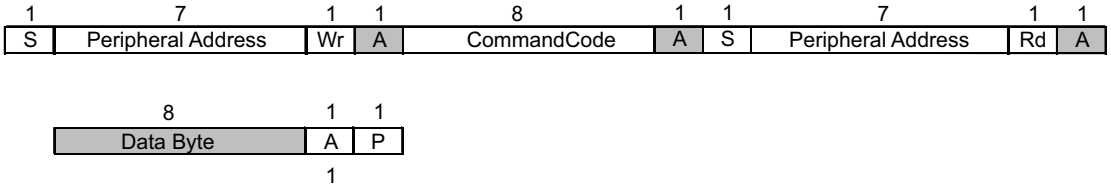

Figure 8-9. Byte Read Protocol

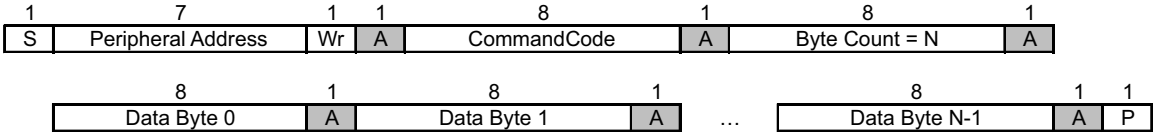

Figure 8-10. Block Write Protocol

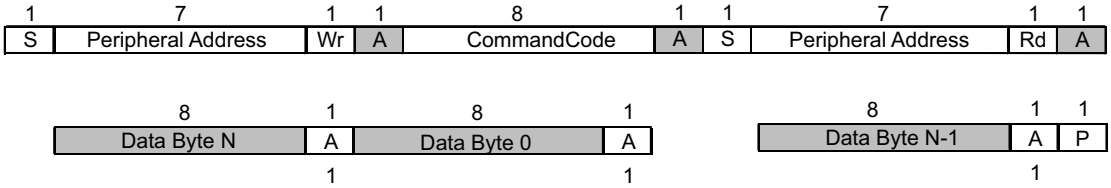

Figure 8-11. Block Read Protocol

8.4.2 SBI Mode

Side-Band Interface (SBI) is a simple 3-wire or 4-wire serial interface which consists of SHFT_LD#, SBI_IN, SBI_CLK and SBI_OUT (optional) pins. When the SHFT_LD# pin is high, the rising edge of SBI_CLK clocks SBI_IN into a shift register. After shifting data, the falling edge of SHFT_LD# loads the shift register contents into the output register. SBI registers can be shifted out through SBI_OUT pin to form daisy chain topology.

Enabling SBI mode does not disable SMBus. SBI registers can be accessed while PWRGD/PWRDN# pin is low.

LMKDB12xx only supports pin mode and SMBus mode.

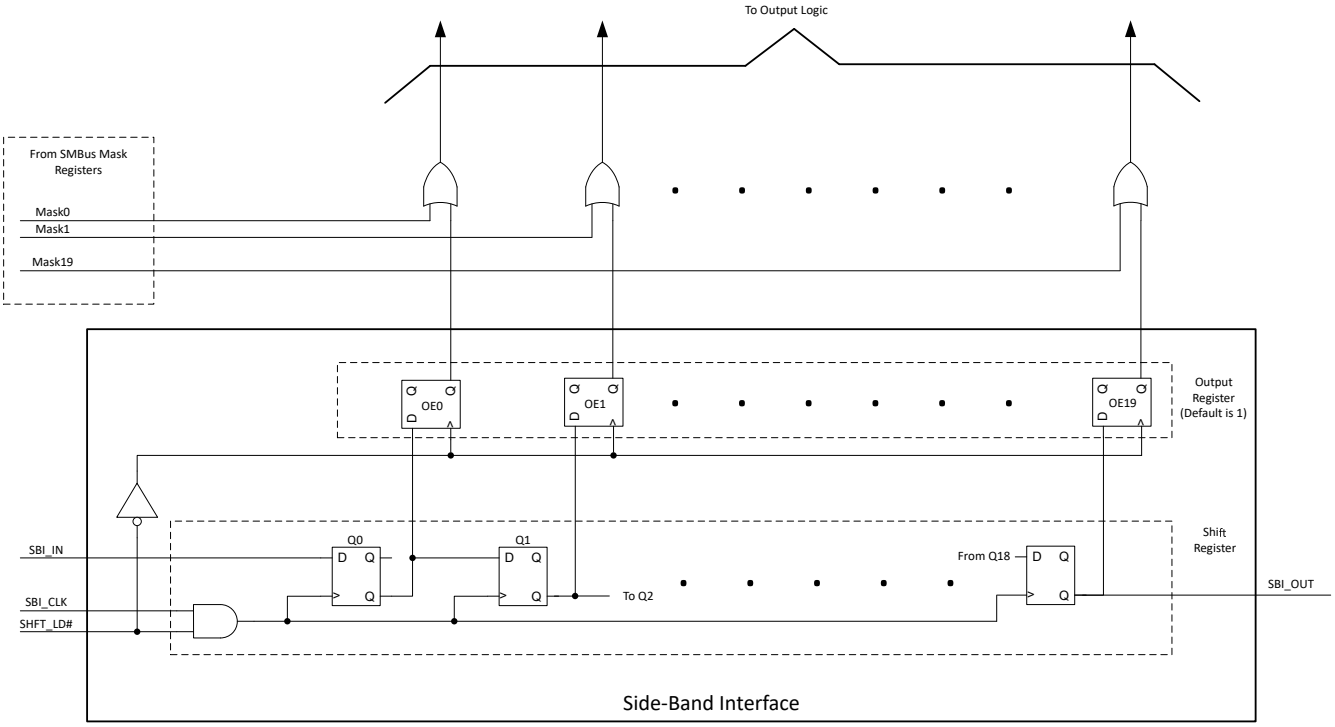

Figure 8-12. SBI Control Logic

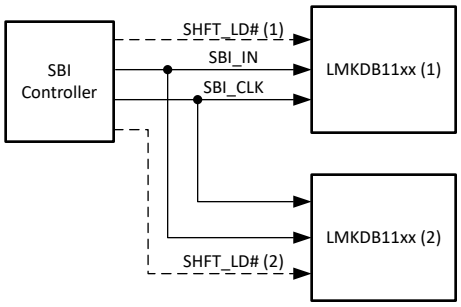

Figure 8-13. SBI Star Topology

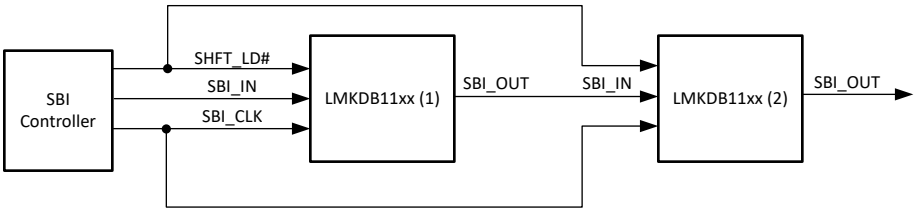

Figure 8-14. SBI Daisy Chain Topology

SBI register sequence:

- LMKDB1120: SBI_IN – CLK0, CLK1, CLK2, CLK3, CLK4, CLK5, CLK6, CLK7, CLK8, CLK9, CLK10, CLK11, CLK12, CLK13, CLK14, CLK15, CLK16, CLK17, CLK18, CLK19 – SBI_OUT
- LMKDB1108: SBI_IN – CLK7, CLK6, CLK5, CLK4, CLK3, CLK2, CLK1, CLK0 – SBI_OUT
- LMKDB1104: SBI_IN – CLK3, CLK2, CLK1, CLK0 – SBI_OUT

Copyright © 2025 Texas Instruments Incorporated

8.4.3 Pin Mode

If the SMBus or SBI interface is not needed, the SMBus pins or SBI pins can be left floating. The device can operate in pin mode and the outputs can be enabled or disabled by OE# pins.

9 Register Maps

9.1 LMKDB1120 and LMKDB1120FS Registers

Table 9-1 lists the memory-mapped registers for the LMKDB1120 and LMKDB1120FS registers. All register offset addresses not listed in Table 9-1 must be considered as reserved locations and the register contents must not be modified.

Table 9-1. LMKDB1120 and LMKDB1120FS Registers

Offset	Acronym	Register Name	Section
0h	R0	Output Enable Control for CLK16 through CLK19	Section 9.1.1
1h	R1	Output Enable Control for CLK0 through CLK7	Section 9.1.2
2h	R2	Output Enable Control for CLK8 through CLK15	Section 9.1.3
3h	R3	OE Pin Readback for CLK5 through CLK12	Section 9.1.4
4h	R4	AOD Enable Control and SBI_EN Readback	Section 9.1.5
5h	R5	Device Info	Section 9.1.6
6h	R6	Device Info (cont.)	Section 9.1.7
7h	R7	SMBus Byte Counter	Section 9.1.8
8h	R8	SBI Mask for CLK0 through CLK7	Section 9.1.9
9h	R9	SBI Mask for CLK8 and CLK15	Section 9.1.10
Ah	R10	SBI Mask for CLK16 and CLK19	Section 9.1.11
Bh	R11	Output Slew Rate Select MSB for CLK0 through CLK7	Section 9.1.12
Ch	R12	Output Slew Rate Select MSB for CLK8 through CLK15	Section 9.1.13
Dh	R13	Output Slew Rate Select MSB for CLK16 through CLK19	Section 9.1.14
14h	R20	Output Amplitude	Section 9.1.15
15h	R21	Input Configuration, Save Config in PD, SMB SDATA Monitoring, and LOS Readback	Section 9.1.16
21h	R33	SBI Mask Readback for CLK0 through CLK7	Section 9.1.17
22h	R34	SBI Mask Readback for CLK8 through CLK15	Section 9.1.18
23h	R35	SBI Mask Readback for CLK16 through CLK19	Section 9.1.19
26h	R38	Non-clearable SMBUS Write Lock	Section 9.1.20
27h	R39	LOS Event Status and Clearable SMBus Write Lock	Section 9.1.21
5Bh	R91	Slew Rate Speed Options 1 and 2 Assignments	Section 9.1.22
5Ch	R92	Slew Rate Speed Options 3 and 4 Assignments	Section 9.1.23
62h	R98	Output Slew Rate Select LSB for CLK0 through CLK7	Section 9.1.24
63h	R99	Output Slew Rate Select LSB for CLK8 through CLK15	Section 9.1.25
64h	R100	Output Slew Rate Select LSB for CLK16 through CLK19	Section 9.1.26

Complex bit access types are encoded to fit into small table cells. Table 9-2 shows the codes that are used for access types in this section.

Table 9-2. LMKDB1120 and LMKDB1120FS Access Type Codes

Access Type	Code	Description
Read Type		
R	R	Read
RC	R C	Read to Clear
Write Type		
W	W	Write

Copyright © 2025 Texas Instruments Incorporated

Table 9-2. LMKDB1120 and LMKDB1120FS Access Type Codes (continued)

Access Type	Code	Description
W1C	W 1C	Write 1 to clear
WSC	W	Write
Reset or Default Value		
-n		Value after reset or the default value

9.1.1 R0 Register (Offset = 0h) [Reset = 78h]

R0 is shown in Table 9-3.

Return to the Summary Table.

Table 9-3. R0 Register Field Descriptions

Bit	Field	Type	Reset	Description
7	RESERVED	R	0h	Reserved
6	CLK_EN_19	R/W	1h	Output Enable for CLK19 0h = Output Disabled (low/low) 1h = Output Enabled
5	CLK_EN_18	R/W	1h	Output Enable for CLK18 0h = Output Disabled (low/low) 1h = Output Enabled
4	CLK_EN_17	R/W	1h	Output Enable for CLK17 0h = Output Disabled (low/low) 1h = Output Enabled
3	CLK_EN_16	R/W	1h	Output Enable for CLK16 0h = Output Disabled (low/low) 1h = Output Enabled
2:0	RESERVED	R	0h	Reserved

9.1.2 R1 Register (Offset = 1h) [Reset = FFh]

R1 is shown in Table 9-4.

Return to the Summary Table.

Table 9-4. R1 Register Field Descriptions

Bit	Field	Type	Reset	Description
7	CLK_EN_7	R/W	1h	Output Enable for CLK7 0h = Output Disabled (low/low) 1h = Output Enabled
6	CLK_EN_6	R/W	1h	Output Enable for CLK6 0h = Output Disabled (low/low) 1h = Output Enabled
5	CLK_EN_5	R/W	1h	Output Enable for CLK5 0h = Output Disabled (low/low) 1h = Output Enabled
4	CLK_EN_4	R/W	1h	Output Enable for CLK4 0h = Output Disabled (low/low) 1h = Output Enabled
3	CLK_EN_3	R/W	1h	Output Enable for CLK3 0h = Output Disabled (low/low) 1h = Output Enabled

Copyright © 2025 Texas Instruments Incorporated

Table 9-4. R1 Register Field Descriptions (continued)

Bit	Field	Type	Reset	Description
2	CLK_EN_2	R/W	1h	Output Enable for CLK2 0h = Output Disabled (low/low) 1h = Output Enabled
1	CLK_EN_1	R/W	1h	Output Enable for CLK1 0h = Output Disabled (low/low) 1h = Output Enabled
0	CLK_EN_0	R/W	1h	Output Enable for CLK0 0h = Output Disabled (low/low) 1h = Output Enabled

9.1.3 R2 Register (Offset = 2h) [Reset = FFh]

R2 is shown in Table 9-5.

Return to the Summary Table.

Table 9-5. R2 Register Field Descriptions

Bit	Field	Type	Reset	Description
7	CLK_EN_15	R/W	1h	Output Enable for CLK15 0h = Output Disabled (low/low) 1h = Output Enabled
6	CLK_EN_14	R/W	1h	Output Enable for CLK14 0h = Output Disabled (low/low) 1h = Output Enabled
5	CLK_EN_13	R/W	1h	Output Enable for CLK13 0h = Output Disabled (low/low) 1h = Output Enabled
4	CLK_EN_12	R/W	1h	Output Enable for CLK12 0h = Output Disabled (low/low) 1h = Output Enabled
3	CLK_EN_11	R/W	1h	Output Enable for CLK11 0h = Output Disabled (low/low) 1h = Output Enabled
2	CLK_EN_10	R/W	1h	Output Enable for CLK10 0h = Output Disabled (low/low) 1h = Output Enabled
1	CLK_EN_9	R/W	1h	Output Enable for CLK9 0h = Output Disabled (low/low) 1h = Output Enabled
0	CLK_EN_8	R/W	1h	Output Enable for CLK8 0h = Output Disabled (low/low) 1h = Output Enabled

9.1.4 R3 Register (Offset = 3h) [Reset = 00h]

R3 is shown in Table 9-6.

Return to the Summary Table.

Table 9-6. R3 Register Field Descriptions

Bit	Field	Type	Reset	Description
7	RB_OEb_12	R	0h	Status of OEb12
6	RB_OEb_11	R	0h	Status of OEb11
5	RB_OEb_10	R	0h	Status of OEb10
4	RB_OEb_9	R	0h	Status of OEb9

Copyright © 2025 Texas Instruments Incorporated

Table 9-6. R3 Register Field Descriptions (continued)

Bit	Field	Type	Reset	Description
3	RB_OEb_8	R	0h	Status of OEb8
2	RB_OEb_7	R	0h	Status of OEb7
1	RB_OEb_6	R	0h	Status of OEb6
0	RB_OEb_5	R	0h	Status of OEb5

9.1.5 R4 Register (Offset = 4h) [Reset = 10h]

R4 is shown in Table 9-7.

Return to the Summary Table.

Table 9-7. R4 Register Field Descriptions

Bit	Field	Type	Reset	Description
7:5	RESERVED	R	0h	Reserved
4	BANK1_AOD_ENABLE	R/W	1h	Enable automatic output disable to low/low when LOS event is detected. Refer to section "Automatic Output Disable" for more information. 0h = Disabled 1h = Enabled
3:1	RESERVED	R	0h	Reserved
0	RB_SBI_ENQ	R	0h	Status of SBI_ENQ

9.1.6 R5 Register (Offset = 5h) [Reset = 0Ah]

R5 is shown in Table 9-8.

Return to the Summary Table.

Table 9-8. R5 Register Field Descriptions

Bit	Field	Type	Reset	Description
7:4	REV_ID	R	0h	Silicon revision
3:0	VENDOR_ID	R	Ah	Vendor ID

9.1.7 R6 Register (Offset = 6h) [Reset = C9h]

R6 is shown in Table 9-9.

Return to the Summary Table.

Table 9-9. R6 Register Field Descriptions

Bit	Field	Type	Reset	Description
7:0	DEV_ID	R	C9h	Device ID

9.1.8 R7 Register (Offset = 7h) [Reset = 07h]

R7 is shown in Table 9-10.

Return to the Summary Table.

Table 9-10. R7 Register Field Descriptions

Bit	Field	Type	Reset	Description
7:5	RESERVED	R	0h	Reserved

Copyright © 2025 Texas Instruments Incorporated

Table 9-10. R7 Register Field Descriptions (continued)

Bit	Field	Type	Reset	Description
4:0	SMBUS_BC	R/W	7h	SMBus Block Read Byte Count

9.1.9 R8 Register (Offset = 8h) [Reset = 00h]

R8 is shown in Table 9-11.

Return to the Summary Table.

Table 9-11. R8 Register Field Descriptions

Bit	Field	Type	Reset	Description
7	SBI_MASK_7	R/W	0h	Mask off Side-Band Disable for CLK7
6	SBI_MASK_6	R/W	0h	Mask off Side-Band Disable for CLK6
5	SBI_MASK_5	R/W	0h	Mask off Side-Band Disable for CLK5
4	SBI_MASK_4	R/W	0h	Mask off Side-Band Disable for CLK4
3	SBI_MASK_3	R/W	0h	Mask off Side-Band Disable for CLK3
2	SBI_MASK_2	R/W	0h	Mask off Side-Band Disable for CLK2
1	SBI_MASK_1	R/W	0h	Mask off Side-Band Disable for CLK1
0	SBI_MASK_0	R/W	0h	Mask off Side-Band Disable for CLK0

9.1.10 R9 Register (Offset = 9h) [Reset = 00h]

R9 is shown in Table 9-12.

Return to the Summary Table.

Table 9-12. R9 Register Field Descriptions

Bit	Field	Type	Reset	Description
7	SBI_MASK_15	R/W	0h	Mask off Side-Band Disable for CLK15
6	SBI_MASK_14	R/W	0h	Mask off Side-Band Disable for CLK14
5	SBI_MASK_13	R/W	0h	Mask off Side-Band Disable for CLK13
4	SBI_MASK_12	R/W	0h	Mask off Side-Band Disable for CLK12
3	SBI_MASK_11	R/W	0h	Mask off Side-Band Disable for CLK11
2	SBI_MASK_10	R/W	0h	Mask off Side-Band Disable for CLK10
1	SBI_MASK_9	R/W	0h	Mask off Side-Band Disable for CLK9
0	SBI_MASK_8	R/W	0h	Mask off Side-Band Disable for CLK8

9.1.11 R10 Register (Offset = Ah) [Reset = 00h]

R10 is shown in Table 9-13.

Return to the Summary Table.

Table 9-13. R10 Register Field Descriptions

Bit	Field	Type	Reset	Description
7:4	RESERVED	R	0h	Reserved
3	SBI_MASK_19	R/W	0h	Mask off Side-Band Disable for CLK19
2	SBI_MASK_18	R/W	0h	Mask off Side-Band Disable for CLK18
1	SBI_MASK_17	R/W	0h	Mask off Side-Band Disable for CLK17
0	SBI_MASK_16	R/W	0h	Mask off Side-Band Disable for CLK16

Copyright © 2025 Texas Instruments Incorporated

9.1.12 R11 Register (Offset = Bh) [Reset = FFh]

R11 is shown in Table 9-14.

Return to the Summary Table.

Table 9-14. R11 Register Field Descriptions

Bit	Field	Type	Reset	Description
7	SLEWRATE_SEL_CLK7_MSB	R/W	1h	MSB CLK7 slew rate select
6	SLEWRATE_SEL_CLK6_MSB	R/W	1h	MSB CLK6 slew rate select
5	SLEWRATE_SEL_CLK5_MSB	R/W	1h	MSB CLK5 slew rate select
4	SLEWRATE_SEL_CLK4_MSB	R/W	1h	MSB CLK4 slew rate select
3	SLEWRATE_SEL_CLK3_MSB	R/W	1h	MSB CLK3 slew rate select
2	SLEWRATE_SEL_CLK2_MSB	R/W	1h	MSB CLK2 slew rate select
1	SLEWRATE_SEL_CLK1_MSB	R/W	1h	MSB CLK1 slew rate select
0	SLEWRATE_SEL_CLK0_MSB	R/W	1h	MSB CLK0 slew rate select

9.1.13 R12 Register (Offset = Ch) [Reset = FFh]

R12 is shown in Table 9-15.

Return to the Summary Table.

Table 9-15. R12 Register Field Descriptions

Bit	Field	Type	Reset	Description
7	SLEWRATE_SEL_CLK15_MSB	R/W	1h	MSB CLK15 slew rate select
6	SLEWRATE_SEL_CLK14_MSB	R/W	1h	MSB CLK14 slew rate select
5	SLEWRATE_SEL_CLK13_MSB	R/W	1h	MSB CLK13 slew rate select
4	SLEWRATE_SEL_CLK12_MSB	R/W	1h	MSB CLK12 slew rate select
3	SLEWRATE_SEL_CLK11_MSB	R/W	1h	MSB CLK11 slew rate select
2	SLEWRATE_SEL_CLK10_MSB	R/W	1h	MSB CLK10 slew rate select
1	SLEWRATE_SEL_CLK9_MSB	R/W	1h	MSB CLK9 slew rate select
0	SLEWRATE_SEL_CLK8_MSB	R/W	1h	MSB CLK8 slew rate select

9.1.14 R13 Register (Offset = Dh) [Reset = 0Fh]

R13 is shown in Table 9-16.

Return to the Summary Table.

Table 9-16. R13 Register Field Descriptions

Bit	Field	Type	Reset	Description
7:4	RESERVED	R	0h	Reserved
3	SLEWRATE_SEL_CLK19_MSB	R/W	1h	MSB CLK19 slew rate select
2	SLEWRATE_SEL_CLK18_MSB	R/W	1h	MSB CLK18 slew rate select
1	SLEWRATE_SEL_CLK17_MSB	R/W	1h	MSB CLK17 slew rate select
0	SLEWRATE_SEL_CLK16_MSB	R/W	1h	MSB CLK16 slew rate select

9.1.15 R20 Register (Offset = 14h) [Reset = 66h]

R20 is shown in Table 9-17.

Return to the Summary Table.

Table 9-17. R20 Register Field Descriptions

Bit	Field	Type	Reset	Description
7:4	AMP	R/W	6h	Global Differential output Control = 0.6V to approximately 1V 25mV/step Default = 0.75V 0h = 600mV 1h = 625mV 2h = 650mV 3h = 675mV 4h = 700mV 5h = 725mV 6h = 750mV 7h = 775mV 8h = 800mV 9h = 825mV Ah = 850mV Bh = 875mV Ch = 900mV Dh = 925mV Eh = 950mV Fh = 975mV
3:0	RESERVED	R	0h	Reserved

9.1.16 R21 Register (Offset = 15h) [Reset = 0Ch]

R21 is shown in Table 9-18.

Return to the Summary Table.

Table 9-18. R21 Register Field Descriptions

Bit	Field	Type	Reset	Description
7	RX1_EN_AC_INPUT	R/W	0h	Enable receiver bias when CLKIN is AC coupled 0h = DC Coupled Input 1h = AC Coupled Input
6	RX1_EN_RTERM_LSB	R/W	0h	Enable termination resistors on CLKIN1 0h = Input Termination R Disabled 1h = Input Termination R Enabled
5	RESERVED	R	0h	Reserved
4	RESERVED	R	0h	Reserved
3	PD_RESTOREB	R/W	1h	Save Configuration in Power Down 1'b0 : config cleared 1'b1: config saved

Copyright © 2025 Texas Instruments Incorporated

Table 9-18. R21 Register Field Descriptions (continued)

Bit	Field	Type	Reset	Description
2	SDATA_TIMEOUT_EN	R/W	1h	Enable SMB SDATA time out monitoring 0h = Disable SDATA Time Out 1h = Enable SDATA Time Out
1	RESERVED	R	0h	Reserved
0	LOSb_RB	R	0h	Real time read back of loss detect block output 0h = LOS Event Detected 1h = LOS Event Not-Detected

9.1.17 R33 Register (Offset = 21h) [Reset = FFh]

R33 is shown in Table 9-19.

Return to the Summary Table.

Table 9-19. R33 Register Field Descriptions

Bit	Field	Type	Reset	Description
7	SBI_CLK_7	R	1h	Readback of Side-Band Disable for CLK7
6	SBI_CLK_6	R	1h	Readback of Side-Band Disable for CLK6
5	SBI_CLK_5	R	1h	Readback of Side-Band Disable for CLK5
4	SBI_CLK_4	R	1h	Readback of Side-Band Disable for CLK4
3	SBI_CLK_3	R	1h	Readback of Side-Band Disable for CLK3
2	SBI_CLK_2	R	1h	Readback of Side-Band Disable for CLK2
1	SBI_CLK_1	R	1h	Readback of Side-Band Disable for CLK1
0	SBI_CLK_0	R	1h	Readback of Side-Band Disable for CLK0

9.1.18 R34 Register (Offset = 22h) [Reset = FFh]

R34 is shown in Table 9-20.

Return to the Summary Table.

Table 9-20. R34 Register Field Descriptions

Bit	Field	Type	Reset	Description
7	SBI_CLK_15	R	1h	Readback of Side-Band Disable for CLK15
6	SBI_CLK_14	R	1h	Readback of Side-Band Disable for CLK14
5	SBI_CLK_13	R	1h	Readback of Side-Band Disable for CLK13
4	SBI_CLK_12	R	1h	Readback of Side-Band Disable for CLK12
3	SBI_CLK_11	R	1h	Readback of Side-Band Disable for CLK11
2	SBI_CLK_10	R	1h	Readback of Side-Band Disable for CLK10
1	SBI_CLK_9	R	1h	Readback of Side-Band Disable for CLK9
0	SBI_CLK_8	R	1h	Readback of Side-Band Disable for CLK8

9.1.19 R35 Register (Offset = 23h) [Reset = 0Fh]

R35 is shown in Table 9-21.

Return to the Summary Table.

Table 9-21. R35 Register Field Descriptions

Bit	Field	Type	Reset	Description
7:4	RESERVED	R	0h	Reserved

Table 9-21. R35 Register Field Descriptions (continued)

Bit	Field	Type	Reset	Description
3	SBI_CLK_19	R	1h	Readback of Side-Band Disable for CLK19
2	SBI_CLK_18	R	1h	Readback of Side-Band Disable for CLK18
1	SBI_CLK_17	R	1h	Readback of Side-Band Disable for CLK17
0	SBI_CLK_16	R	1h	Readback of Side-Band Disable for CLK16

9.1.20 R38 Register (Offset = 26h) [Reset = 00h]

R38 is shown in Table 9-22.

Return to the Summary Table.

Table 9-22. R38 Register Field Descriptions

Bit	Field	Type	Reset	Description
7:1	RESERVED	R	0h	Reserved
0	WRITE_LOCK	W1C	0h	Non-clearable SMBus Write Lock bit. When written to one, the SMBus control registers cannot be written to. This bit can only be cleared by recycling power. 0h = SMBus Not locked for Writing 1h = SMBus Locked for Writing

9.1.21 R39 Register (Offset = 27h) [Reset = 00h]

R39 is shown in Table 9-23.

Return to the Summary Table.

Table 9-23. R39 Register Field Descriptions

Bit	Field	Type	Reset	Description
7:2	RESERVED	R	0h	Reserved
1	LOS_EVT	R/WSC	0h	LOS Event Status When high, indicates that a LOS event is detected. Can be cleared by writing a 1 to the bit. 0h = LOS Event Not-Detected 1h = LOS Event Detected
0	WRITE_LOCK_RW1C	R/W	0h	Clearable SMBus Write Lock bit. When written to one, the SMBus control registers cannot be written to. This bit can be cleared by writing a 1 to the bit. 0h = SMBus Not Locked for Writing 1h = SMBus locked for writing

9.1.22 R91 Register (Offset = 5Bh) [Reset = 00h]

R91 is shown in Table 9-24.

Return to the Summary Table.

Copyright © 2025 Texas Instruments Incorporated

Table 9-24. R91 Register Field Descriptions

Bit	Field	Type	Reset	Description
7:4	SLEWRATE_OPT_2	R/W	2h/6h	There are four register assignments each storing a slew rate value (chosen out of 16 available slew rate values). This register bits relate to the 2nd option. Go to Programmable Output Slew Rate section for more information. 0h = 0 1h = 1 2h = 2 (Default for LMKDB1120FS) 3h = 3 4h = 4 5h = 5 6h = 6 (Default for LMKDB1120) 7h = 7 8h = 8 9h = 9 Ah = 10 Bh = 11 Ch = 12 Dh = 13 Eh = 14 Fh = 15
3:0	SLEWRATE_OPT_1	R/W	0h	There are four register assignments each storing a slew rate value (chosen out of 16 available slew rate values). This register bits relate to the 1st option. Go to Programmable Output Slew Rate section for more information. 0h = 0 1h = 1 2h = 2 3h = 3 4h = 4 5h = 5 6h = 6 7h = 7 8h = 8 9h = 9 Ah = 10 Bh = 11 Ch = 12 Dh = 13 Eh = 14 Fh = 15

9.1.23 R92 Register (Offset = 5Ch) [Reset = 00h]

R92 is shown in Table 9-25.

Return to the Summary Table.

Table 9-25. R92 Register Field Descriptions

Bit	Field	Type	Reset	Description
7:4	SLEWRATE_OPT_4	R/W	Fh	There are four register assignments each storing a slew rate value (chosen out of 16 available slew rate values). This register bits relate to the 4th option. Go to Programmable Output Slew Rate section for more information. 0h = 0 1h = 1 2h = 2 3h = 3 4h = 4 5h = 5 6h = 6 7h = 7 8h = 8 9h = 9 Ah = 10 Bh = 11 Ch = 12 Dh = 13 Eh = 14 Fh = 15
3:0	SLEWRATE_OPT_3	R/W	6h/Ah	There are four register assignments each storing a slew rate value (chosen out of 16 available slew rate values). This register bits relate to the 3rd option. Go to Programmable Output Slew Rate section for more information. 0h = 0 1h = 1 2h = 2 3h = 3 4h = 4 5h = 5 6h = 6 (Default for LMKDB1120FS) 7h = 7 8h = 8 9h = 9 Ah = 10 (Default for LMKDB1120) Bh = 11 Ch = 12 Dh = 13 Eh = 14 Fh = 15

9.1.24 R98 Register (Offset = 62h) [Reset = 00h]

R98 is shown in Table 9-26.

Return to the Summary Table.

Table 9-26. R98 Register Field Descriptions

Bit	Field	Type	Reset	Description
7	SLEWRATE_SEL_CLK7_LSB	R/W	0h	LSB CLK7 slew rate select
6	SLEWRATE_SEL_CLK6_LSB	R/W	0h	LSB CLK6 slew rate select
5	SLEWRATE_SEL_CLK5_LSB	R/W	0h	LSB CLK5 slew rate select
4	SLEWRATE_SEL_CLK4_LSB	R/W	0h	LSB CLK4 slew rate select
3	SLEWRATE_SEL_CLK3_LSB	R/W	0h	LSB CLK3 slew rate select

Copyright © 2025 Texas Instruments Incorporated

Table 9-26. R98 Register Field Descriptions (continued)

Bit	Field	Type	Reset	Description
2	SLEWRATE_SEL_CLK2_LSB	R/W	0h	LSB CLK2 slew rate select
1	SLEWRATE_SEL_CLK1_LSB	R/W	0h	LSB CLK1 slew rate select
0	SLEWRATE_SEL_CLK0_LSB	R/W	0h	LSB CLK0 slew rate select

9.1.25 R99 Register (Offset = 63h) [Reset = 00h]

R99 is shown in Table 9-27.

Return to the Summary Table.

Table 9-27. R99 Register Field Descriptions

Bit	Field	Type	Reset	Description
7	SLEWRATE_SEL_CLK15_LSB	R/W	0h	LSB CLK15 slew rate select
6	SLEWRATE_SEL_CLK14_LSB	R/W	0h	LSB CLK14 slew rate select
5	SLEWRATE_SEL_CLK13_LSB	R/W	0h	LSB CLK13 slew rate select
4	SLEWRATE_SEL_CLK12_LSB	R/W	0h	LSB CLK12 slew rate select
3	SLEWRATE_SEL_CLK11_LSB	R/W	0h	LSB CLK11 slew rate select
2	SLEWRATE_SEL_CLK10_LSB	R/W	0h	LSB CLK10 slew rate select
1	SLEWRATE_SEL_CLK9_LSB	R/W	0h	LSB CLK9 slew rate select
0	SLEWRATE_SEL_CLK8_LSB	R/W	0h	LSB CLK8 slew rate select

9.1.26 R100 Register (Offset = 64h) [Reset = 00h]

R100 is shown in Table 9-28.

Return to the Summary Table.

Table 9-28. R100 Register Field Descriptions

Bit	Field	Type	Reset	Description
7:4	RESERVED	R	0h	Reserved
3	SLEWRATE_SEL_CLK19_LSB	R/W	0h	LSB CLK19 slew rate select
2	SLEWRATE_SEL_CLK18_LSB	R/W	0h	LSB CLK18 slew rate select
1	SLEWRATE_SEL_CLK17_LSB	R/W	0h	LSB CLK17 slew rate select
0	SLEWRATE_SEL_CLK16_LSB	R/W	0h	LSB CLK16 slew rate select

Copyright © 2025 Texas Instruments Incorporated

9.2 LMKDB1108 and LMKDB1108FS Registers

Table 9-29 lists the memory-mapped registers for the LMKDB1108 and LMKDB1108FS registers. All register offset addresses not listed in Table 9-29 must be considered as reserved locations and the register contents must not be modified.

Table 9-29. LMKDB1108 and LMKDB1108FS Registers

Offset	Acronym	Register Name	Section
0h	R0	Output Enable Control for CLK2 through CLK7	Section 9.2.1
1h	R1	Output Enable Control for CLK0 and CLK1	Section 9.2.2
2h	R2	OE Pin Readback for CLK2 through CLK7	Section 9.2.3
3h	R3	OE Pin Readback for CLK0 and CLK1	Section 9.2.4
4h	R4	AOD Enable Control and SBI_EN Readback	Section 9.2.5
5h	R5	Device Info	Section 9.2.6
6h	R6	Device Info (cont.)	Section 9.2.7
7h	R7	SMBus Byte Counter	Section 9.2.8
8h	R8	SBI Mask for CLK2 through CLK7	Section 9.2.9
9h	R9	SBI Mask for CLK0 and CLK1	Section 9.2.10
Bh	R11	SBI Mask Readback for CLK0 through CLK5	Section 9.2.11
Ch	R12	SBI Mask Readback for CLK6 and CLK7	Section 9.2.12
11h	R17	Output Amplitude	Section 9.2.13
12h	R18	Input Configuration, Save Config in PD, SMB SDATA Monitoring, and LOS Readback	Section 9.2.14
14h	R20	Output Slew Rate Select MSB for CLK2 through CLK7	Section 9.2.15
15h	R21	Output Slew Rate Select MSB for CLK0 and CLK1	Section 9.2.16
26h	R38	Non-clearable SMBUS Write Lock	Section 9.2.17
27h	R39	LOS Event Status and Clearable SMBus Write Lock	Section 9.2.18
35h	R53	Slew Rate Mode Control Selection	Section 9.2.19
5Bh	R91	Slew Rate Speed Options 1 and 2 Assignments	Section 9.2.20
5Ch	R92	Slew Rate Speed Options 3 and 4 Assignments	Section 9.2.21
62h	R98	Output Slew Rate Select LSB for CLK0 through CLK7	Section 9.2.22

Complex bit access types are encoded to fit into small table cells. Table 9-30 shows the codes that are used for access types in this section.

Table 9-30. LMKDB1108 and LMKDB1108FS Access Type Codes

Access Type	Code	Description
Read Type		
R	R	Read
RC	R C	Read to Clear
Write Type		
W	W	Write
W1C	W 1C	Write 1 to clear
WSC	W	Write
Reset or Default Value		
-n		Value after reset or the default value

Copyright © 2025 Texas Instruments Incorporated

9.2.1 R0 Register (Offset = 0h) [Reset = EEh]

R0 is shown in Table 9-31.

Return to the Summary Table.

Table 9-31. R0 Register Field Descriptions

Bit	Field	Type	Reset	Description
7	CLK_EN_2	R/W	1h	Output Enable for CLK2 0h = Output Disabled (low/low) 1h = Output Enabled
6	CLK_EN_3	R/W	1h	Output Enable for CLK3 0h = Output Disabled (low/low) 1h = Output Enabled
5	CLK_EN_4	R/W	1h	Output Enable for CLK4 0h = Output Disabled (low/low) 1h = Output Enabled
4	RESERVED	R	0h	Reserved
3	CLK_EN_5	R/W	1h	Output Enable for CLK5 0h = Output Disabled (low/low) 1h = Output Enabled
2	CLK_EN_6	R/W	1h	Output Enable for CLK6 0h = Output Disabled (low/low) 1h = Output Enabled
1	CLK_EN_7	R/W	1h	Output Enable for CLK7 0h = Output Disabled (low/low) 1h = Output Enabled
0	RESERVED	R	0h	Reserved

9.2.2 R1 Register (Offset = 1h) [Reset = 24h]

R1 is shown in Table 9-32.

Return to the Summary Table.

Table 9-32. R1 Register Field Descriptions

Bit	Field	Type	Reset	Description
7:6	RESERVED	R	0h	Reserved
5	CLK_EN_0	R/W	1h	Output Enable for CLK0 0h = Output Disabled (low/low) 1h = Output Enabled
4:3	RESERVED	R	0h	Reserved
2	CLK_EN_1	R/W	1h	Output Enable for CLK1 0h = Output Disabled (low/low) 1h = Output Enabled
1:0	RESERVED	R	0h	Reserved

9.2.3 R2 Register (Offset = 2h) [Reset = 00h]

R2 is shown in Table 9-33.

Return to the Summary Table.

Table 9-33. R2 Register Field Descriptions

Bit	Field	Type	Reset	Description
7	RB_OEb_2	R	0h	Status of OEb2
6	RB_OEb_3	R	0h	Status of OEb3

Copyright © 2025 Texas Instruments Incorporated

Table 9-33. R2 Register Field Descriptions (continued)

Bit	Field	Type	Reset	Description
5	RB_OEb_4	R	0h	Status of OEb4
4	RESERVED	R	0h	Reserved
3	RB_OEb_5	R	0h	Status of OEb5
2	RB_OEb_6	R	0h	Status of OEb6
1	RB_OEb_7	R	0h	Status of OEb7
0	RESERVED	R	0h	Reserved

9.2.4 R3 Register (Offset = 3h) [Reset = 00h]

R3 is shown in Table 9-34.

Return to the Summary Table.

Table 9-34. R3 Register Field Descriptions

Bit	Field	Type	Reset	Description
7:6	RESERVED	R	0h	Reserved
5	RB_OEb_0	R	0h	Status of OEb0
4:3	RESERVED	R	0h	Reserved
2	RB_OEb_1	R	0h	Status of OEb1
1:0	RESERVED	R	0h	Reserved

9.2.5 R4 Register (Offset = 4h) [Reset = 10h]

R4 is shown in Table 9-35.

Return to the Summary Table.

Table 9-35. R4 Register Field Descriptions

Bit	Field	Type	Reset	Description
7:5	RESERVED	R	0h	Reserved
4	AOD_ENABLE	R/W	1h	Enable automatic output disable (AOD) to low/low when LOS event is detected. Refer to section "Automatic Output Disable" for more information. 0h = Disabled (DC Coupled) 1h = Enabled (AC Coupled)
3:1	RESERVED	R	0h	Reserved
0	RB_SBI_ENQ	R	0h	Status of SBI_ENQ

9.2.6 R5 Register (Offset = 5h) [Reset = 0Ah]

R5 is shown in Table 9-36.

Return to the Summary Table.

Table 9-36. R5 Register Field Descriptions

Bit	Field	Type	Reset	Description
7:4	REV_ID	R	0h	Revision ID
3:0	VENDOR_ID	R	Ah	Vendor ID

Copyright © 2025 Texas Instruments Incorporated

9.2.7 R6 Register (Offset = 6h) [Reset = 08h]

R6 is shown in Table 9-37.

Return to the Summary Table.

Table 9-37. R6 Register Field Descriptions

Bit	Field	Type	Reset	Description
7:0	DEV_ID	R	8h	Device ID

9.2.8 R7 Register (Offset = 7h) [Reset = 07h]

R7 is shown in Table 9-38.

Return to the Summary Table.

Table 9-38. R7 Register Field Descriptions

Bit	Field	Type	Reset	Description
7:5	RESERVED	R	0h	Reserved
4:0	SMBUS_BC	R/W	7h	SMBUS Block Read Byte Count

9.2.9 R8 Register (Offset = 8h) [Reset = 00h]

R8 is shown in Table 9-39.

Return to the Summary Table.

Table 9-39. R8 Register Field Descriptions

Bit	Field	Type	Reset	Description
7	SBI_MASK_2	R/W	0h	Mask off Side-Band Disable for CLK2
6	SBI_MASK_3	R/W	0h	Mask off Side-Band Disable for CLK3
5	SBI_MASK_4	R/W	0h	Mask off Side-Band Disable for CLK4
4	RESERVED	R	0h	Reserved
3	SBI_MASK_5	R/W	0h	Mask off Side-Band Disable for CLK5
2	SBI_MASK_6	R/W	0h	Mask off Side-Band Disable for CLK6
1	SBI_MASK_7	R/W	0h	Mask off Side-Band Disable for CLK7
0	RESERVED	R	0h	Reserved

9.2.10 R9 Register (Offset = 9h) [Reset = 00h]

R9 is shown in Table 9-40.

Return to the Summary Table.

Table 9-40. R9 Register Field Descriptions

Bit	Field	Type	Reset	Description
7:6	RESERVED	R	0h	Reserved
5	SBI_MASK_0	R/W	0h	Mask off Side-Band Disable for CLK0
4:3	RESERVED	R	0h	Reserved
2	SBI_MASK_1	R/W	0h	Mask off Side-Band Disable for CLK1
1:0	RESERVED	R	0h	Reserved

Copyright © 2025 Texas Instruments Incorporated

9.2.11 R11 Register (Offset = Bh) [Reset = EEh]

R11 is shown in Table 9-41.

Return to the Summary Table.

Table 9-41. R11 Register Field Descriptions

Bit	Field	Type	Reset	Description
7	SBI_CLK_2	R	1h	Readback of Side-Band Disable for CLK5
6	SBI_CLK_3	R	1h	Readback of Side-Band Disable for CLK4
5	SBI_CLK_4	R	1h	Readback of Side-Band Disable for CLK3
4	RESERVED	R	0h	Reserved
3	SBI_CLK_5	R	1h	Readback of Side-Band Disable for CLK2
2	SBI_CLK_6	R	1h	Readback of Side-Band Disable for CLK1
1	SBI_CLK_7	R	1h	Readback of Side-Band Disable for CLK0
0	RESERVED	R	0h	Reserved

9.2.12 R12 Register (Offset = Ch) [Reset = 24h]

R12 is shown in Table 9-42.

Return to the Summary Table.

Table 9-42. R12 Register Field Descriptions

Bit	Field	Type	Reset	Description
7:6	RESERVED	R	0h	Reserved
5	SBI_CLK_0	R	1h	Readback of Side-Band Disable for CLK7
4:3	RESERVED	R	0h	Reserved
2	SBI_CLK_1	R	1h	Readback of Side-Band Disable for CLK6
1:0	RESERVED	R	0h	Reserved

9.2.13 R17 Register (Offset = 11h) [Reset = 66h]

R17 is shown in Table 9-43.

Return to the Summary Table.

Table 9-43. R17 Register Field Descriptions

Bit	Field	Type	Reset	Description
7:4	AMP	R/W	6h	Global Differential output Control 0.6V to 1V 25mV/step Default = 0.8V 0h = 600mV 1h = 625mV 2h = 650mV 3h = 675mV 4h = 700mV 5h = 725mV 6h = 750mV 7h = 775mV 8h = 800mV 9h = 825mV Ah = 850mV Bh = 875mV Ch = 900mV Dh = 925mV Eh = 950mV Fh = 975mV

Copyright © 2025 Texas Instruments Incorporated

Table 9-43. R17 Register Field Descriptions (continued)

Bit	Field	Type	Reset	Description
3:0	RESERVED	R	0h	Reserved

9.2.14 R18 Register (Offset = 12h) [Reset = 08h]

R18 is shown in Table 9-44.

Return to the Summary Table.

Table 9-44. R18 Register Field Descriptions

Bit	Field	Type	Reset	Description
7	RX_EN_AC_INPUT	R/W	0h	Enable receiver bias when CLKIN is AC coupled 0h = DC Coupled Input 1h = AC Coupled Input
6	RX_EN_RTERM_LSB	R/W	0h	Enable/Disables termination resistors on CLKIN1 0h = Disabled 1h = Enabled
5:4	RESERVED	R	0h	Reserved
3	PD_RESTOREB	R/W	1h	Save Configuration in Power Down 0h = Config Cleared 1h = Config Saved
2:1	RESERVED	R	0h	Reserved
0	LOSb_RB	R	0h	Real time read back of loss detect block output 0h = LOS Event Detected 1h = LOS Event Not-Detected

9.2.15 R20 Register (Offset = 14h) [Reset = EEh]

R20 is shown in Table 9-45.

Return to the Summary Table.

Table 9-45. R20 Register Field Descriptions

Bit	Field	Type	Reset	Description
7	SLEWRATE_SEL_CLK2_MSB	R/W	1h	MSB CLK2 slew rate select
6	SLEWRATE_SEL_CLK3_MSB	R/W	1h	MSB CLK3 slew rate select
5	SLEWRATE_SEL_CLK4_MSB	R/W	1h	MSB CLK4 slew rate select
4	RESERVED	R	0h	Reserved
3	SLEWRATE_SEL_CLK5_MSB	R/W	1h	MSB CLK5 slew rate select
2	SLEWRATE_SEL_CLK6_MSB	R/W	1h	MSB CLK6 slew rate select
1	SLEWRATE_SEL_CLK7_MSB	R/W	1h	MSB CLK7 slew rate select
0	RESERVED	R	0h	Reserved

9.2.16 R21 Register (Offset = 15h) [Reset = 24h]

R21 is shown in Table 9-46.

Return to the Summary Table.

Table 9-46. R21 Register Field Descriptions

Bit	Field	Type	Reset	Description
7:6	RESERVED	R	0h	Reserved
5	SLEWRATE_SEL_CLK0_MSB	R/W	1h	MSB CLK0 slew rate select
4:3	RESERVED	R	0h	Reserved
2	SLEWRATE_SEL_CLK1_MSB	R/W	1h	MSB CLK1 slew rate select
1:0	RESERVED	R	0h	Reserved

9.2.17 R38 Register (Offset = 26h) [Reset = 00h]

R38 is shown in Table 9-47.

Return to the Summary Table.

Table 9-47. R38 Register Field Descriptions

Bit	Field	Type	Reset	Description
7:1	RESERVED	R	0h	Reserved
0	WRITE_LOCK	R	0h	Non-clearable SMBus Write Lock bit. When written to one, the SMBus control registers cannot be written to. This bit can only be cleared by recycling power. 0h = SMBus Not Locked for Writing 1h = SMBus Locked for Writing

9.2.18 R39 Register (Offset = 27h) [Reset = 00h]

R39 is shown in Table 9-48.

Return to the Summary Table.

Table 9-48. R39 Register Field Descriptions

Bit	Field	Type	Reset	Description
7:2	RESERVED	R	0h	Reserved
1	LOS_EVT	R/W	0h	LOS Event Status. When high, indicates that a LOS event is detected. Can be cleared by writing a 1. 0h = Not LOS Event Detected 1h = LOS Event Detected
0	WRITE_LOCK_RW1C	R	0h	Clearable SMBus Write Lock bit. When written to one, the SMBus control registers can not be written to. This bit can be cleared by writing a 1. 0h = SMBus Not Locked for Writing 1h = SMBus Locked for Writing

9.2.19 R53 Register (Offset = 35h) [Reset = 00h]

R53 is shown in Table 9-49.

Return to the Summary Table.

Table 9-49. R53 Register Field Descriptions

Bit	Field	Type	Reset	Description
7:6	RESERVED	R	0h	Reserved
5	SLEWRATE_CTRL_MODE	R/WSC	0h	Sets which mode is used to change the outputs slew rates 0h = Pin mode 1h = SMBus mode

Copyright © 2025 Texas Instruments Incorporated

Table 9-49. R53 Register Field Descriptions (continued)

Bit	Field	Type	Reset	Description
4:0	RESERVED	R	0h	Reserved

9.2.20 R91 Register (Offset = 5Bh) [Reset = 60h]

R91 is shown in Table 9-50.

Return to the Summary Table.

Table 9-50. R91 Register Field Descriptions

Bit	Field	Type	Reset	Description
7:4	SLEWRATE_OPT_2	R/W	2h/6h	There are four register assignments each storing a slew rate value (chosen out of the 16 available slew rate values). This register bits relate to the 2nd option. Go to Programmable Output Slew Rate section for more information. 0h = 0 1h = 1 2h = 2 (Default for LMKDB1108FS) 3h = 3 4h = 4 5h = 5 6h = 6 (Default for LMKDB1108) 7h = 7 8h = 8 9h = 9 Ah = 10 Bh = 11 Ch = 12 Dh = 13 Eh = 14 Fh = 15
3:0	SLEWRATE_OPT_1	R/W	0h	There are four register assignments each storing a slew rate value (chosen out of the 16 available slew rate values). This register bits relate to the 1st option. Go to Programmable Output Slew Rate section for more information. 0h = 0 1h = 1 2h = 2 3h = 3 4h = 4 5h = 5 6h = 6 7h = 7 8h = 8 9h = 9 Ah = 10 Bh = 11 Ch = 12 Dh = 13 Eh = 14 Fh = 15

9.2.21 R92 Register (Offset = 5Ch) [Reset = FAh]

R92 is shown in Table 9-51.

Return to the Summary Table.

Table 9-51. R92 Register Field Descriptions

Bit	Field	Type	Reset	Description
7:4	SLEWRATE_OPT_4	R/W	Fh	There are four register assignments each storing a slew rate value (chosen out of the 16 available slew rate values). This register bits relate to the 4th option. Go to Programmable Output Slew Rate section for more information. 0h = 0 1h = 1 2h = 2 3h = 3 4h = 4 5h = 5 6h = 6 7h = 7 8h = 8 9h = 9 Ah = 10 Bh = 11 Ch = 12 Dh = 13 Eh = 14 Fh = 15
3:0	SLEWRATE_OPT_3	R/W	6h/Ah	There are four register assignments each storing a slew rate value (chosen out of the 16 available slew rate values). This register bits relate to the 3rd option. Go to Programmable Output Slew Rate section for more information. 0h = 0 1h = 1 2h = 2 3h = 3 4h = 4 5h = 5 6h = 6 (Default for LMKDB1108FS) 7h = 7 8h = 8 9h = 9 Ah = 10 (Default for LMKDB1108) Bh = 11 Ch = 12 Dh = 13 Eh = 14 Fh = 15

9.2.22 R98 Register (Offset = 62h) [Reset = 00h]

R98 is shown in Table 9-52.

Return to the Summary Table.

Table 9-52. R98 Register Field Descriptions

Bit	Field	Type	Reset	Description
7	SLEWRATE_SEL_CLK7_LSB	R/W	0h	LSB CLK7 Slew Rate Control
6	SLEWRATE_SEL_CLK6_LSB	R/W	0h	LSB CLK6 Slew Rate Control
5	SLEWRATE_SEL_CLK5_LSB	R/W	0h	LSB CLK5 Slew Rate Control
4	SLEWRATE_SEL_CLK4_LSB	R/W	0h	LSB CLK4 Slew Rate Control
3	SLEWRATE_SEL_CLK3_LSB	R/W	0h	LSB CLK3 Slew Rate Control

Copyright © 2025 Texas Instruments Incorporated

Table 9-52. R98 Register Field Descriptions (continued)

Bit	Field	Type	Reset	Description
2	SLEWRATE_SEL_CLK2_LSB	R/W	0h	LSB CLK2 Slew Rate Control
1	SLEWRATE_SEL_CLK1_LSB	R/W	0h	LSB CLK1 Slew Rate Control
0	SLEWRATE_SEL_CLK0_LSB	R/W	0h	LSB CLK0 Slew Rate Control

9.3 LMKDB1104 and LMKDB1104FS Registers

Table 9-53 lists the memory-mapped registers for the LMKDB1104 and LMKDB1104FS registers. All register offset addresses not listed in Table 9-53 must be considered as reserved locations and the register contents must not be modified.

Table 9-53. LMKDB1104 and LMKDB1104FS Registers

Offset	Acronym	Register Name	Section
0h	R0	Output Enable Control for CLK2 and CLK3	Section 9.3.1
1h	R1	Output Enable Control for CLK0 and CLK1	Section 9.3.2
2h	R2	OE Pin Readback for CLK2 and CLK3	Section 9.3.3
3h	R3	OE Pin Readback for CLK0 and CLK1	Section 9.3.4
4h	R4	Readback status of SBI_EN and CLKIN AOD Enable Control	Section 9.3.5
5h	R5	Device Info	Section 9.3.6
6h	R6	Device Info (cont.)	Section 9.3.7
7h	R7	SMBus Byte Counter	Section 9.3.8
8h	R8	Mask off Side-Band Disable for CLK3 and CLK2	Section 9.3.9
9h	R9	Mask off Side-Band Disable for CLK1 and CLK0	Section 9.3.10
Bh	R11	Readback of Side-Band Disable for CLK3 and CLK2	Section 9.3.11
Ch	R12	Readback of Side-Band Disable for CLK1 and CLK0	Section 9.3.12
11h	R17	Output Amplitude	Section 9.3.13
12h	R18	Input Configuration, Save Config in PD, Slew Rate select mode, SMB SDATA Monitoring, and LOS Readback	Section 9.3.14
14h	R20	Output Slew Rate Select MSB for CLK2 and CLK3	Section 9.3.15
15h	R21	Output Slew Rate Select MSB for CLK0 and CLK1	Section 9.3.16
26h	R38	Non-clearable SMBUS Write Lock	Section 9.3.17
27h	R39	LOS Event Status and Clearable SMBus Write Lock	Section 9.3.18
5Bh	R91	Slew Rate Speed Options 1 and 2 Assignments	Section 9.3.19
5Ch	R92	Slew Rate Speed Options 3 and 4 Assignments	Section 9.3.20
62h	R98	Output Slew Rate Select LSB for CLK0 and CLK1	Section 9.3.21
63h	R99	Output Slew Rate Select LSB for CLK2 and CLK3	Section 9.3.22

Complex bit access types are encoded to fit into small table cells. Table 9-54 shows the codes that are used for access types in this section.

Table 9-54. LMKDB1104 and LMKDB1104FS Access Type Codes

Access Type	Code	Description
Read Type		
R	R	Read
Write Type		
W	W	Write
W1C	W 1C	Write 1 to clear
Reset or Default Value		
-n		Value after reset or the default value

Copyright © 2025 Texas Instruments Incorporated

9.3.1 R0 Register (Offset = 0h) [Reset = 24h]

R0 is shown in Table 9-55.

Return to the Summary Table.

Table 9-55. R0 Register Field Descriptions

Bit	Field	Type	Reset	Description
7:6	RESERVED	R	0h	Reserved
5	CLK_EN_2	R/W	1h	Output Enable for CLK2 0h = Output Disabled (low/low) 1h = Output Enabled
4:3	RESERVED	R	0h	Reserved
2	CLK_EN_3	R/W	1h	Output Enable for CLK3 0h = Output Disabled (low/low) 1h = Output Enabled
1:0	RESERVED	R	0h	Reserved

9.3.2 R1 Register (Offset = 1h) [Reset = 22h]

R1 is shown in Table 9-56.

Return to the Summary Table.

Table 9-56. R1 Register Field Descriptions

Bit	Field	Type	Reset	Description
7:6	RESERVED	R	0h	Reserved
5	CLK_EN_0	R/W	1h	Output Enable for CLK0 0h = Output Disabled (low/low) 1h = Output Enabled
4:2	RESERVED	R	0h	Reserved
1	CLK_EN_1	R/W	1h	Output Enable for CLK1 0h = Output Disabled (low/low) 1h = Output Enabled
0	RESERVED	R	0h	Reserved

9.3.3 R2 Register (Offset = 2h) [Reset = 00h]

R2 is shown in Table 9-57.

Return to the Summary Table.

Table 9-57. R2 Register Field Descriptions

Bit	Field	Type	Reset	Description
7:6	RESERVED	R	0h	Reserved
5	RB_OEb_2	R	0h	Status of OEb2
4:3	RESERVED	R	0h	Reserved
2	RB_OEb_3	R	0h	Status of OEb3
1:0	RESERVED	R	0h	Reserved

9.3.4 R3 Register (Offset = 3h) [Reset = 00h]

R3 is shown in Table 9-58.

Return to the Summary Table.

Copyright © 2025 Texas Instruments Incorporated

Table 9-58. R3 Register Field Descriptions

Bit	Field	Type	Reset	Description
7:6	RESERVED	R	0h	Reserved
5	RB_OEb_0	R	0h	Status of OEb0
4:2	RESERVED	R	0h	Reserved
1	RB_OEb_1	R	0h	Status of OEb1
0	RESERVED	R	0h	Reserved

9.3.5 R4 Register (Offset = 4h) [Reset = 10h]

R4 is shown in Table 9-59.

Return to the Summary Table.

Table 9-59. R4 Register Field Descriptions

Bit	Field	Type	Reset	Description
7:5	RESERVED	R	0h	Reserved
4	AOD_ENABLE	R/W	1h	Enable automatic output disable (AOD) for CLKIN to low/low when LOS event is detected. Refer to section "Automatic Output Disable" for more information. 0h = Inactive 1h = Active
3:1	RESERVED	R	0h	Reserved
0	RB_SBI_ENQ	R	0h	Status of SBI_ENQ

9.3.6 R5 Register (Offset = 5h) [Reset = 0Ah]

R5 is shown in Table 9-60.

Return to the Summary Table.

Table 9-60. R5 Register Field Descriptions

Bit	Field	Type	Reset	Description
7:4	REV_ID	R	0h	Revision ID
3:0	VENDOR_ID	R	Ah	Vendor ID

9.3.7 R6 Register (Offset = 6h) [Reset = 04h]

R6 is shown in Table 9-61.

Return to the Summary Table.

Table 9-61. R6 Register Field Descriptions

Bit	Field	Type	Reset	Description
7:0	DEV_ID	R	4h	Device ID

9.3.8 R7 Register (Offset = 7h) [Reset = 07h]

R7 is shown in Table 9-62.

Return to the Summary Table.

Table 9-62. R7 Register Field Descriptions

Bit	Field	Type	Reset	Description
7:5	RESERVED	R	0h	Reserved

Copyright © 2025 Texas Instruments Incorporated

Table 9-62. R7 Register Field Descriptions (continued)

Bit	Field	Type	Reset	Description
4:0	SMBUS_BC	R/W	7h	SMBUS Block Read Byte Count

9.3.9 R8 Register (Offset = 8h) [Reset = 00h]

R8 is shown in Table 9-63.

Return to the Summary Table.

Table 9-63. R8 Register Field Descriptions

Bit	Field	Type	Reset	Description
7:6	RESERVED	R	0h	Reserved
5	SBI_MASK_2	R/W	0h	Mask off Side-Band Disable for CLK2
4:3	RESERVED	R	0h	Reserved
2	SBI_MASK_3	R/W	0h	Mask off Side-Band Disable for CLK3
1:0	RESERVED	R	0h	Reserved

9.3.10 R9 Register (Offset = 9h) [Reset = 00h]

R9 is shown in Table 9-64.

Return to the Summary Table.

Table 9-64. R9 Register Field Descriptions

Bit	Field	Type	Reset	Description
7:6	RESERVED	R	0h	Reserved
5	SBI_MASK_0	R/W	0h	Mask off Side-Band Disable for CLK0
4:2	RESERVED	R	0h	Reserved
1	SBI_MASK_1	R/W	0h	Mask off Side-Band Disable for CLK1
0	RESERVED	R	0h	Reserved

9.3.11 R11 Register (Offset = Bh) [Reset = 24h]

R11 is shown in Table 9-65.

Return to the Summary Table.

Table 9-65. R11 Register Field Descriptions

Bit	Field	Type	Reset	Description
7:6	RESERVED	R	0h	Reserved
5	SBI_CLK_2	R	1h	Readback of Side-Band Disable for CLK2
4:3	RESERVED	R	0h	Reserved
2	SBI_CLK_3	R	1h	Readback of Side-Band Disable for CLK3
1:0	RESERVED	R	0h	Reserved

9.3.12 R12 Register (Offset = Ch) [Reset = 22h]

R12 is shown in Table 9-66.

Return to the Summary Table.

Copyright © 2025 Texas Instruments Incorporated

Table 9-66. R12 Register Field Descriptions

Bit	Field	Type	Reset	Description
7:6	RESERVED	R	0h	Reserved
5	SBI_CLK_0	R	1h	Readback of Side-Band Disable for CLK0
4:2	RESERVED	R	0h	Reserved
1	SBI_CLK_1	R	1h	Readback of Side-Band Disable for CLK1
0	RESERVED	R	0h	Reserved

9.3.13 R17 Register (Offset = 11h) [Reset = 66h]

R17 is shown in Table 9-67.

Return to the Summary Table.

Table 9-67. R17 Register Field Descriptions

Bit	Field	Type	Reset	Description
7:4	AMP	R/W	6h	Global Differential output Control,approximately 0.6V to 1V 25mV/step (default = 0.75V) 0h = 600mV 1h = 625mV 2h = 650mV 3h = 675mV 4h = 700mV 5h = 725mV 6h = 750mV 7h = 775mV 8h = 800mV 9h = 825mV Ah = 850mV Bh = 875mV Ch = 900mV Dh = 925mV Eh = 950mV Fh = 975mV
3:0	RESERVED	R	0h	Reserved

9.3.14 R18 Register (Offset = 12h) [Reset = 0Ah]

R18 is shown in Table 9-68.

Return to the Summary Table.

Table 9-68. R18 Register Field Descriptions

Bit	Field	Type	Reset	Description
7	RX_CLKIN_EN_AC_INPUT	R/W	0h	Enable receiver bias when CLKIN is AC coupled 0h = DC Coupled Input 1h = AC Coupled Input
6	RX_CLKIN_EN_RTERM	R/W	0h	Enable termination resistors on CLKIN1 0h = Input termination inactive 1h = Input termination active
5	RESERVED	R	0h	Reserved
4	SLEWRATE_CTRL_MODE	R	0h	Slew rate select preference between pin mode and register mode. 0h = Pin Control 1h = Register Control
3	PD_RESTOREB	R	1h	Save configuration in powerdown 0h = Config Cleared 1h = Config Saved
2	RESERVED	R	0h	Reserved

Copyright © 2025 Texas Instruments Incorporated

Table 9-68. R18 Register Field Descriptions (continued)

Bit	Field	Type	Reset	Description
1	SDATA_TIMEOUT_EN	R	1h	Enable SMBus SDATA time out monitoring 0h = Disable SDATA timeout 1h = Enable SDATA timeout
0	LOSb_RB	R	0h	Real time read back of loss detect block output 0h = LOS Event Detected 1h = LOS Event Not-Detected

9.3.15 R20 Register (Offset = 14h) [Reset = 24h]

R20 is shown in Table 9-69.

Return to the Summary Table.

Table 9-69. R20 Register Field Descriptions

Bit	Field	Type	Reset	Description
7:6	RESERVED	R	0h	Reserved
5	SLEWRATE_SEL_CLK2_MSB	R/W	1h	MSB CLK2 slew rate select
4:3	RESERVED	R	0h	Reserved
2	SLEWRATE_SEL_CLK3_MSB	R/W	1h	MSB CLK3 slew rate select
1:0	RESERVED	R	0h	Reserved

9.3.16 R21 Register (Offset = 15h) [Reset = 22h]

R21 is shown in Table 9-70.

Return to the Summary Table.

Table 9-70. R21 Register Field Descriptions

Bit	Field	Type	Reset	Description
7:6	RESERVED	R	0h	Reserved
5	SLEWRATE_SEL_CLK0_MSB	R/W	1h	MSB CLK0 slew rate select
4:2	RESERVED	R	0h	Reserved
1	SLEWRATE_SEL_CLK1_MSB	R/W	1h	MSB CLK1 slew rate select
0	RESERVED	R	0h	Reserved

9.3.17 R38 Register (Offset = 26h) [Reset = 00h]

R38 is shown in Table 9-71.

Return to the Summary Table.

Table 9-71. R38 Register Field Descriptions

Bit	Field	Type	Reset	Description
7:1	RESERVED	R	0h	Reserved
0	WRITE_LOCK	R	0h	Non-clearable SMBus Write Lock bit. When written to one, the SMBus control registers cannot be written to. This bit can only be cleared by recycling power. 0h = SMBus Not Locked for Writing 1h = SMBus Locked for Writing

Copyright © 2025 Texas Instruments Incorporated

9.3.18 R39 Register (Offset = 27h) [Reset = 00h]

R39 is shown in Table 9-72.

Return to the Summary Table.

Table 9-72. R39 Register Field Descriptions

Bit	Field	Type	Reset	Description
7:2	RESERVED	R	0h	Reserved
1	LOS_EVT	R	0h	LOS Event Status. When high, indicates that a LOS event is detected. Can be cleared by writing a 1. 0h = Not LOS Event Detected 1h = LOS Event Detected
0	WRITE_LOCK_RW1C	R/W1C	0h	Clearable SMBus Write Lock bit. When written to one, the SMBus control registers can not be written to. This bit can be cleared by writing a 1. 0h = SMBus Not Locked for Writing 1h = SMBus Locked for Writing

9.3.19 R91 Register (Offset = 5Bh) [Reset = 60h]

R91 is shown in Table 9-73.

Return to the Summary Table.

Table 9-73. R91 Register Field Descriptions

Bit	Field	Type	Reset	Description
7:4	SLEWRATE_OPT_2	R/W	2h/6h	There are four register assignments each storing a slew rate value (chosen out of the 16 available slew rate values). This register bits relate to the 2nd option. Go to Programmable Output Slew Rate section for more information. 0h = 0 (fastest) 1h = 1 2h = 2 (Default for LMKDB1104FS) 3h = 3 4h = 4 5h = 5 6h = 6 (Default for LMKDB1104) 7h = 7 8h = 8 9h = 9 Ah = 10 Bh = 11 Ch = 12 Dh = 13 Eh = 14 Fh = 15 (slowest)

Copyright © 2025 Texas Instruments Incorporated

Table 9-73. R91 Register Field Descriptions (continued)

Bit	Field	Type	Reset	Description
3:0	SLEWRATE_OPT_1	R/W	0h	There are four register assignments each storing a slew rate value (chosen out of the 16 available slew rate values). This register bits relate to the 1st option. Go to Programmable Output Slew Rate section for more information. 0h = 0 (fastest) 1h = 1 2h = 2 3h = 3 4h = 4 5h = 5 6h = 6 7h = 7 8h = 8 9h = 9 Ah = 10 Bh = 11 Ch = 12 Dh = 13 Eh = 14 Fh = 15 (slowest)

9.3.20 R92 Register (Offset = 5Ch) [Reset = FAh]

R92 is shown in Table 9-74.

Return to the Summary Table.

Table 9-74. R92 Register Field Descriptions

Bit	Field	Type	Reset	Description
7:4	SLEWRATE_OPT_4	R/W	Fh	There are four register assignments each storing a slew rate value (chosen out of the 16 available slew rate values). This register bits relate to the 4th option. Go to Programmable Output Slew Rate section for more information. 0h = 0 (fastest) 1h = 1 2h = 2 3h = 3 4h = 4 5h = 5 6h = 6 7h = 7 8h = 8 9h = 9 Ah = 10 Bh = 11 Ch = 12 Dh = 13 Eh = 14 Fh = 15 (slowest)

Copyright © 2025 Texas Instruments Incorporated

Table 9-74. R92 Register Field Descriptions (continued)

Bit	Field	Type	Reset	Description
3:0	SLEWRATE_OPT_3	R/W	6h/Ah	There are four register assignments each storing a slew rate value (chosen out of the 16 available slew rate values). This register bits relate to the 3rd option. Go to Programmable Output Slew Rate section for more information. 0h = 0 (fastest) 1h = 1 2h = 2 3h = 3 4h = 4 5h = 5 6h = 6 (Default for LMKDB1104FS) 7h = 7 8h = 8 9h = 9 Ah = 10 (Default for LMKDB1104) Bh = 11 Ch = 12 Dh = 13 Eh = 14 Fh = 15 (slowest)

9.3.21 R98 Register (Offset = 62h) [Reset = 00h]

R98 is shown in Table 9-75.

Return to the Summary Table.

Table 9-75. R98 Register Field Descriptions

Bit	Field	Type	Reset	Description
7	SLEWRATE_SEL_CLK1_LSB	R/W	0h	LSB CLK1 Slew Rate Control
6:5	RESERVED	R	0h	Reserved
4	SLEWRATE_SEL_CLK0_LSB	R/W	0h	LSB CLK0 Slew Rate Control
3:0	RESERVED	R	0h	Reserved

9.3.22 R99 Register (Offset = 63h) [Reset = 00h]

R99 is shown in Table 9-76.

Return to the Summary Table.

Table 9-76. R99 Register Field Descriptions

Bit	Field	Type	Reset	Description
7	RESERVED	R	0h	Reserved
6	SLEWRATE_SEL_CLK3_LSB	R/W	0h	LSB CLK3 Slew Rate Control
5:3	RESERVED	R	0h	Reserved
2	SLEWRATE_SEL_CLK2_LSB	R/W	0h	LSB CLK2 Slew Rate Control
1:0	RESERVED	R	0h	Reserved

Copyright © 2025 Texas Instruments Incorporated

10 Application and Implementation

Note

Information in the following applications sections is not part of the TI component specification, and TI does not warrant its accuracy or completeness. TI's customers are responsible for determining suitability of components for their purposes, as well as validating and testing their design implementation to confirm system functionality.

10.1 Application Information

The LMKDB devices are a family of ultra-low additive jitter LP-HCSL clock buffers and clock MUX. The device can be controlled through SMBus registers, Side Band Interface, and OE# pins.

10.2 Typical Application

This example shows PCIe and Ethernet clock distribution. Provide multiple copies of PCIe clocks (100MHz) or Ethernet clocks (156.25MHz) based on the given source.

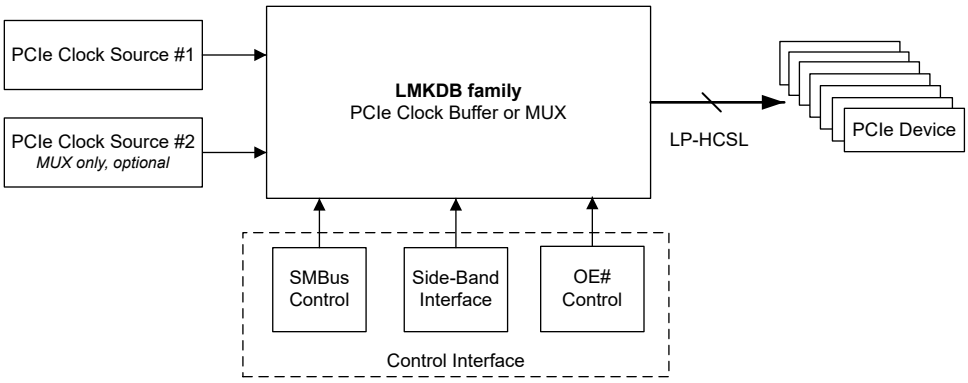

Figure 10-1. Typical Application

10.2.1 Design Requirements

Find two buffers for PCIe clock fan-out and Ethernet clock fan-out separately. Jitter requirements must be met and space must be minimized.

Table 10-1. Design Parameters

PARAMETER	VALUE
Number of PCIe clocks	15
Number of 156.25MHz Ethernet clocks	7
PCIe architecture	CC (Common Clock)
PCIe reference clock slew rate	≥3.5V/ns
PCIe Gen 5 reference clock jitter	45fs maximum
PCIe Gen 5 total jitter	50fs maximum
156.25MHz reference clock slew rate	≥3.5V/ns
156.25MHz reference clock jitter (12kHz to 20MHz)	90fs maximum
156.25MHz total jitter (12kHz to 20MHz)	100fs maximum

10.2.2 Detailed Design Procedure

First of all, calculate the jitter budget for the clock buffer using RMS addition. The maximum allowed additive jitter for the clock buffer is square root of the difference between square of reference clock jitter and square of total clock jitter.

The maximum PCIe Gen 5 additive jitter allowed for the buffer is sqrt(50^2 – 45^2) = 21 fs. According to the Specifications under the *Electrical Characteristics* table, the additive PCIe Gen 5 jitter under Common Clock and ≥3.5V/ns input slew rate test condition is 13fs maximum, well below 21fs requirement. Therefore, the LMKDB1120 (20 outputs) can be used for PCIe Gen 5 clock distribution.

Similarly, the maximum 12kHz to 20MHz additive jitter allowed at 156.25MHz is sqrt(100^2 – 90^2) = 43fs. According to the Specifications under the *Electrical Characteristics* table, the 12kHz to 20MHz additive jitter at 156.25MHz is 31fs maximum, well below the 43fs requirement. Therefore, the LMKDB1108 (8 outputs) can be used for Ethernet clock distribution.

10.2.3 Application Curves

The following plots are example phase noise plots before and after using the LMKDB at 156.25MHz, respectively. The LMKDB clock buffer adds a 22fs (typical) jitter from 12kHz to 20MHz. All LMKDB devices have very similar performance.

To better understand jitter and how the additive jitter of the LMKDB resulted in 22fs refer to *Timing is Everything: How to measure additive jitter* TI blog post.

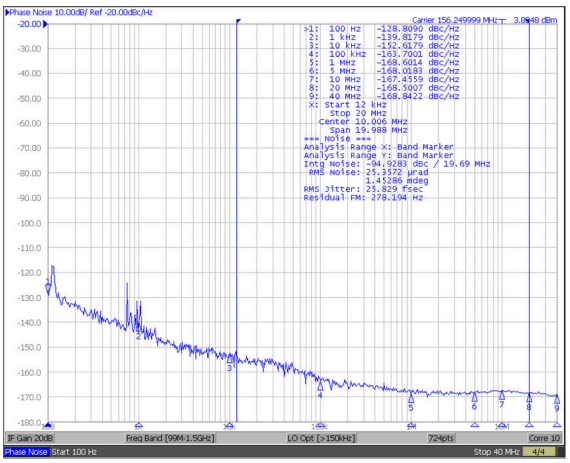

Figure 10-2. Input Source at 156.25MHz (12kHz - 20MHz)

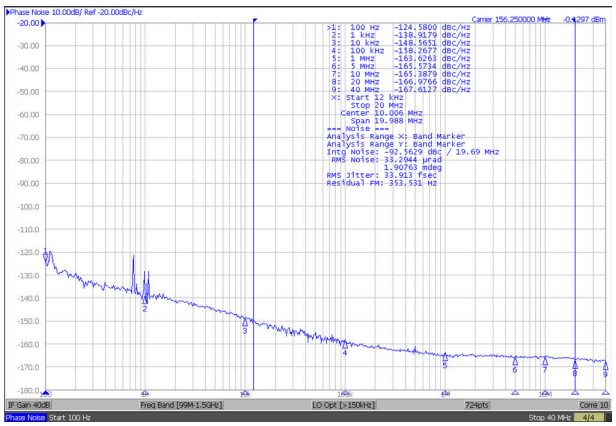

See Note 1 and 2 in Graph Notes table

Figure 10-3. LMKDB11xx/120x Phase Noise / Output Jitter at 156.25MHz (12kHz - 20MHz)

Table 10-2. Graph Notes

NOTE	
(1)	The typical RMS jitter values in the plots show the total output RMS jitter (J_{OUT}) for each frequency and the source clock RMS jitter (J_{SOURCE}). From these values, the Additive RMS Jitter can be calculated as: J_{ADD} = SQRT($J_{OUT}{}^2$ – $J_{SOURCE}{}^2$).
(2)	J_{ADD} at 156.25MHz = SQRT(33.9^2- 25.8^2) = 22.0 fs

10.3 Power Supply Recommendations

Place a 0.1µF capacitor close to every power supply pin. To minimize noise on VDDA, VDD_IN0 and VDD_IN1, place a 2.2Ω resistor next to the pins. All supply pins can be grouped onto one power rail. TI recommends a Ferrite Bead and a 10µF capacitor to GND for the entire chip. Figure 10-4 and Figure 10-5 shows an example power schematic.

Copyright © 2025 Texas Instruments Incorporated

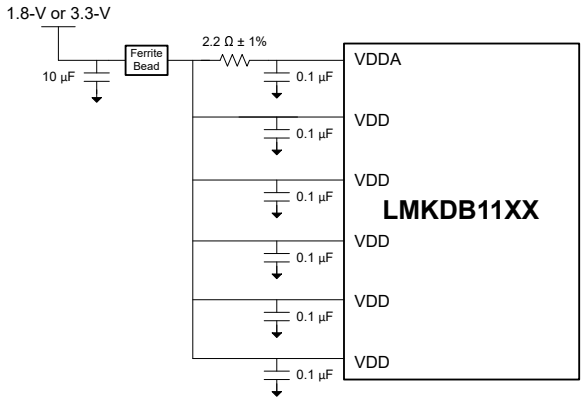

Figure 10-4. Power Supply Recommendation for LMKDB11XX Buffer

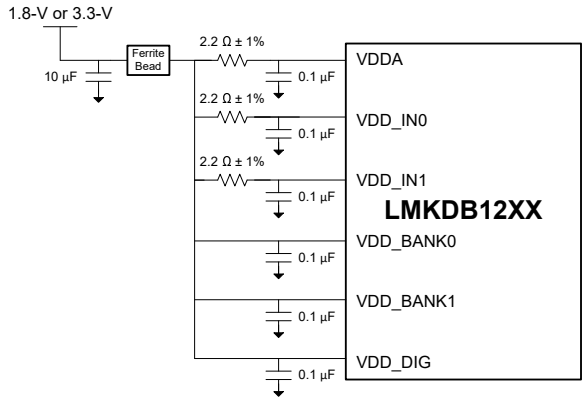

Figure 10-5. Power Supply Recommendation for LMKDB12XX MUX

If both inputs are used for a MUX device and the two inputs have different frequencies (including PCIe SSC and PCIe No SSC), then isolate the inputs and corresponding output banks by adding more Ferrite Beads.

10.4 Layout

10.4.1 Layout Guidelines

Use a low-inductance ground connection between the device DAP and the PCB.

Match PCB trace impedance with device output impedance (85Ω or 100Ω differential impedance). Eliminate stubs and reduce discontinuity on the transmission lines.

10.4.2 Layout Example

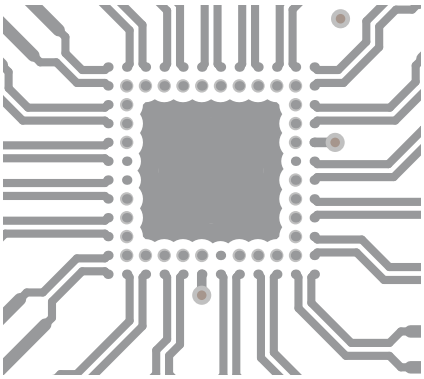

Figure 10-6. LMKDB1120 and LMKDB1120FS Layout Example - Top Layer

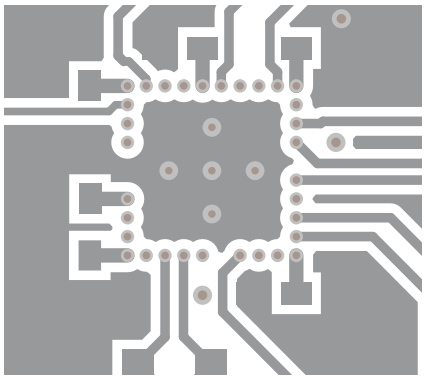

Figure 10-7. LMKDB1120 and LMKDB1120FS Layout Example - Bottom Layer

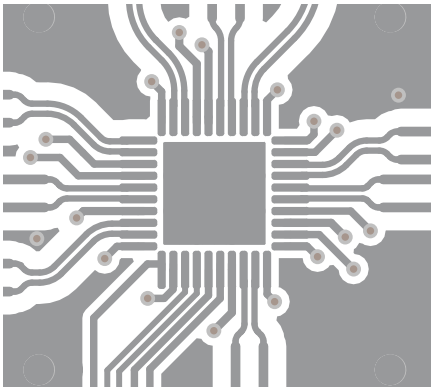

Figure 10-8. LMKDB1108 and LMKDB1108FS Layout Example - Top Layer

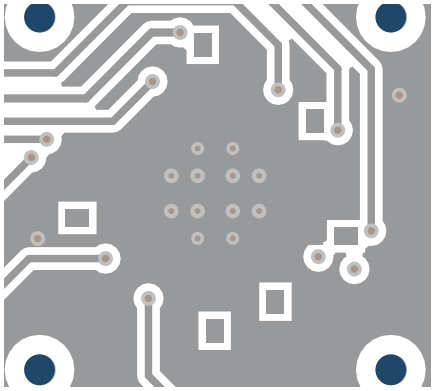

Figure 10-9. LMKDB1108 and LMKDB1108FS Layout Example - Bottom Layer

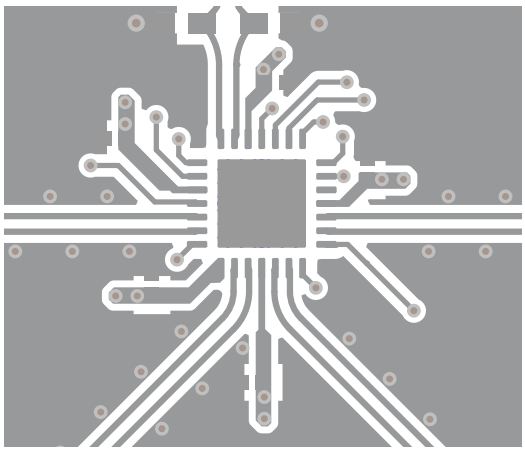

Figure 10-10. LMKDB1104 and LMKDB1104FS Layout Example - Top Layer

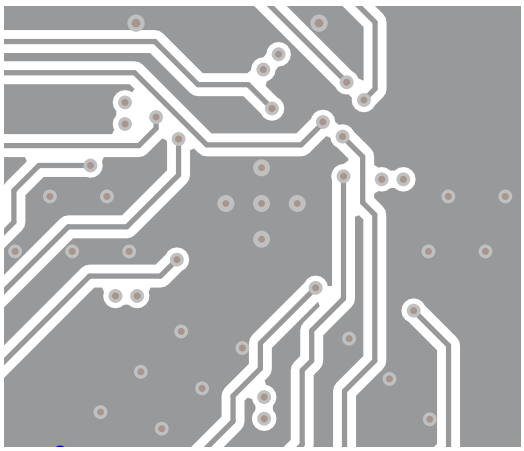

Figure 10-11. LMKDB1104 and LMKDB1104FS Layout Example - Bottom Layer

Copyright © 2025 Texas Instruments Incorporated

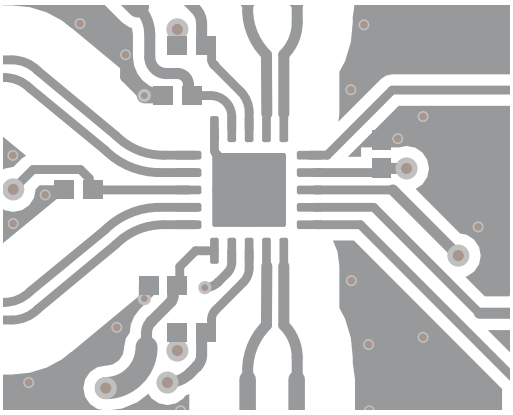

Figure 10-12. LMKDB1202 Layout Example - Top Layer

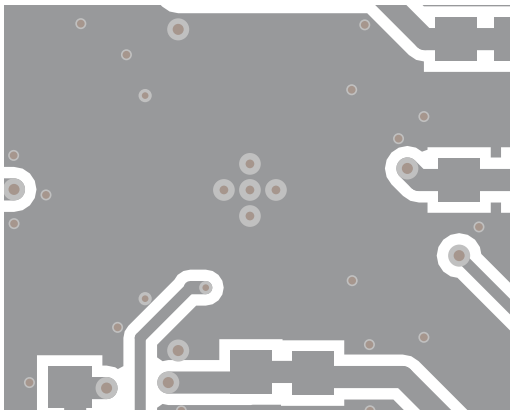

Figure 10-13. LMKDB1202 Layout Example - Bottom Layer

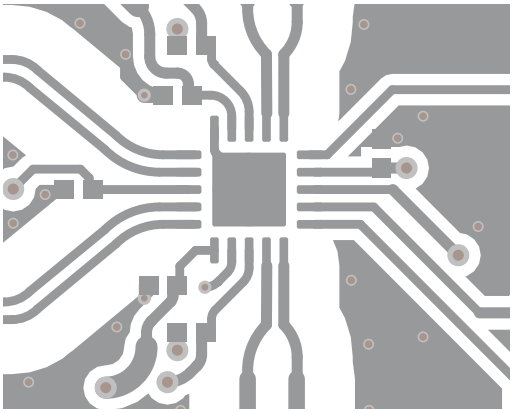

Figure 10-14. LMKDB1102 Layout Example - Top Layer

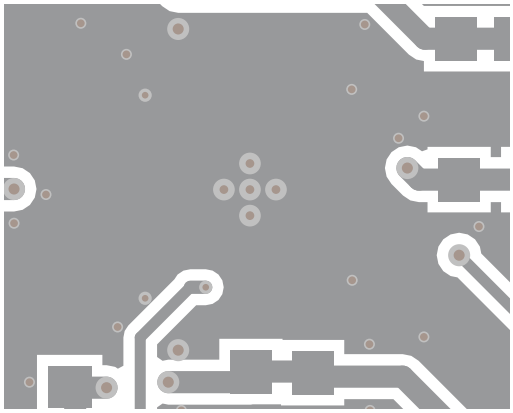

Figure 10-15. LMKDB1102 Layout Example - Bottom Layer

11 Device and Documentation Support

TI offers an extensive line of development tools. Tools and software to evaluate the performance of the device, generate code, and develop solutions are listed below.

11.1 Documentation Support

11.1.1 Related Documentation

For related documentation, see the following:

- Texas Instruments, *LMKDB1120 Evaluation Module*, user's guide
- Texas Instruments, *LMKDB1108 Evaluation Module*, user's guide
- Texas Instruments, *LMKDB1104 Evaluation Module*, user's guide
- Texas Instruments, *LMKDB1204 Evaluation Module*, user's guide
- Texas Instruments, *LMKDB1102/1202 Evaluation Module*, user's guide
- Texas Instruments, *Timing is Everything: How to measure additive jitter*, blog post

11.2 Receiving Notification of Documentation Updates

To receive notification of documentation updates, navigate to the device product folder on ti.com. Click on *Notifications* to register and receive a weekly digest of any product information that has changed. For change details, review the revision history included in any revised document.

11.3 Support Resources

TI E2E™ support forums are an engineer's go-to source for fast, verified answers and design help — straight from the experts. Search existing answers or ask your own question to get the quick design help you need.

Linked content is provided "AS IS" by the respective contributors. They do not constitute TI specifications and do not necessarily reflect TI's views; see TI's Terms of Use.

11.4 Trademarks

TI E2E™ is a trademark of Texas Instruments.
All trademarks are the property of their respective owners.

11.5 Electrostatic Discharge Caution

This integrated circuit can be damaged by ESD. Texas Instruments recommends that all integrated circuits be handled with appropriate precautions. Failure to observe proper handling and installation procedures can cause damage.

ESD damage can range from subtle performance degradation to complete device failure. Precision integrated circuits may be more susceptible to damage because very small parametric changes could cause the device not to meet its published specifications.

11.6 Glossary

TI Glossary	This glossary lists and explains terms, acronyms, and definitions.

12 Revision History

NOTE: Page numbers for previous revisions may differ from page numbers in the current version.

Changes from Revision D (June 2024) to Revision E (August 2025) **Page**

- Updated the number format for tables, figures, and cross-references throughout the document..... 1
- Moved the LMKDB1204 and LMKDB1202 to a new data sheet (SNAS927)..... 1
- Added LMKDB1112 pin out description and diagram. Updated the pinout diagrams and general descriptions on pins. 4
- Updated Figure 7-1 diagram load to 2pF.....26
- Update the overview section for buffer only family. 28

Copyright © 2025 Texas Instruments Incorporated

- Updated functional diagram for LMKDB11xx devices and moved the LMKDB1202 and LMKDB1204 functional diagram to new data sheet. 28
- Updated slew rate description section..... 32
- Added LMDB1120FS, LMKD1108FS and LMKDB1104 to title examples. Removed LMKDB1204 layout example and moved to SNAS927..... 72

Changes from Revision C (May 2024) to Revision D (June 2024) **Page**

- Updated the number format for tables, figures, and cross-references throughout the document..... 1
- Updated R17 register 7:4 name to “AMP” to match GUI name for LMKDB1108:..... 1
- Updated R18 table to stack Reserved bits 5:4 in one row for LMKDB1108..... 1
- Exposed registers R5 to change REV_ID for LMKDB1108..... 1
- Exposed R91 and R92 to show output slew rate control for LMKDB1108..... 1
- Corrected register names that control correct outputs of chip (R0, R1, R2, R3, R20, R21) for LMKDB1204.... 1
- Updated ^*vSADR1_tri* to ^*vSADR0_tri* for pin 4 in *LMKBD1108 RKP Package 40-Pin VQFN (Top View)* 4
- Updated pin 7 name and description from "VDD" to "VDDA" in *LMKBD1108 RKP Package 40-Pin VQFN (Top View)*..... 4
- Updated pin 10 name and description from "VDDA" to "VDD" in *LMKBD1108 RKP Package 40-Pin VQFN (Top View)* 4
- Updated functional block diagram *LMKDB12xx, LMKDB12xx, or LMKDB1102 Functional Block Diagram* to fix HW_SW_CTRL pin naming to SMB_EN. Changed the structure of functional block diagram..... 28
- Updated functional block diagram *LMKDB12xx, LMKDB12xx, or LMKDB1102 Functional Block Diagram* to fix HW_SW_CTRL pin naming to SMB_EN..... 28
- Changed the structure of functional block diagram..... 28
- Added pin mode description in the Section 8.3.4.2section..... 32
- Added layout examples for LMDB1102, LMKDB1202, LMKDB1104, LMKD1204 and LMKDB1108..... 72

Changes from Revision B (February 2024) to Revision C (May 2024) **Page**

- Updated the number format for tables, figures, and cross-references throughout the document..... 1
- Deleted preview information from LMKDB1204 rows in the *Device Comparison* table..... 3
- Updated ^*vSADR1_tri* to ^*vSADR0_tri* for pin 4 in *LMKDB1108 Functions* 4
- Added Input Configurations section. 29
- Added Table 8-1..... 31

Changes from Revision A (December 2023) to Revision B (February 2024) **Page**

- Updated the number format for tables, figures, and cross-references throughout the document..... 1
- Added additional explanations for recommended PWRDN# assertion/deassertion sequences and effects when not followed properly in the *PWRDN# Assertion and Deassertion* section..... 30

Changes from Revision * (November 2023) to Revision A (December 2023) **Page**

- Updated the number format for tables, figures, and cross-references throughout the document..... 1

13 Mechanical, Packaging, and Orderable Information

The following pages include mechanical, packaging, and orderable information. This information is the most current data available for the designated devices. This data is subject to change without notice and revision of this document. For browser-based versions of this data sheet, refer to the left-hand navigation.

Copyright © 2025 Texas Instruments Incorporated

PACKAGING INFORMATION

Orderable part number	Status (1)	Material type (2)	Package | Pins	Package qty | Carrier	RoHS (3)	Lead finish/ Ball material (4)	MSL rating/ Peak reflow (5)	Op temp (°C)	Part marking (6)
LMKDB1102REYR	Active	Production	VQFN (REY) | 20	3000 | LARGE T&R	Yes	NIPDAU	Level-1-260C-UNLIM	-40 to 105	DB1102
LMKDB1102REYR.A	Active	Production	VQFN (REY) | 20	3000 | LARGE T&R	Yes	NIPDAU	Level-1-260C-UNLIM	-40 to 105	DB1102
LMKDB1102REYT	Active	Production	VQFN (REY) | 20	250 | SMALL T&R	Yes	NIPDAU	Level-1-260C-UNLIM	-40 to 105	DB1102
LMKDB1102REYT.A	Active	Production	VQFN (REY) | 20	250 | SMALL T&R	Yes	NIPDAU	Level-1-260C-UNLIM	-40 to 105	DB1102
LMKDB1104FS85REXR	Active	Production	VQFN (REX) | 28	3000 | LARGE T&R	Yes	NIPDAU	Level-1-260C-UNLIM	-40 to 105	LMKDB 1104FA
LMKDB1104Z100REXR	Active	Production	VQFN (REX) | 28	3000 | LARGE T&R	Yes	NIPDAU	Level-1-260C-UNLIM	-40 to 105	LMKDB 114Z100
LMKDB1104Z100REXR.A	Active	Production	VQFN (REX) | 28	3000 | LARGE T&R	Yes	NIPDAU	Level-1-260C-UNLIM	-40 to 105	LMKDB 114Z100
LMKDB1104Z100REXT	Active	Production	VQFN (REX) | 28	250 | SMALL T&R	Yes	NIPDAU	Level-1-260C-UNLIM	-40 to 105	LMKDB 114Z100
LMKDB1104Z100REXT.A	Active	Production	VQFN (REX) | 28	250 | SMALL T&R	Yes	NIPDAU	Level-1-260C-UNLIM	-40 to 105	LMKDB 114Z100
LMKDB1104Z85REXR	Active	Production	VQFN (REX) | 28	3000 | LARGE T&R	Yes	NIPDAU	Level-1-260C-UNLIM	-40 to 105	LMKDB 1104Z85
LMKDB1104Z85REXR.A	Active	Production	VQFN (REX) | 28	3000 | LARGE T&R	Yes	NIPDAU	Level-1-260C-UNLIM	-40 to 105	LMKDB 1104Z85
LMKDB1104Z85REXT	Active	Production	VQFN (REX) | 28	250 | SMALL T&R	Yes	NIPDAU	Level-1-260C-UNLIM	-40 to 105	LMKDB 1104Z85
LMKDB1104Z85REXT.A	Active	Production	VQFN (REX) | 28	250 | SMALL T&R	Yes	NIPDAU	Level-1-260C-UNLIM	-40 to 105	LMKDB 1104Z85
LMKDB1108FS85RKPR	Active	Production	VQFN (RKP) | 40	3000 | LARGE T&R	Yes	NIPDAU	Level-1-260C-UNLIM	-40 to 105	LMKDB 1108FA
LMKDB1108Z100RKPR	Active	Production	VQFN (RKP) | 40	2500 | LARGE T&R	Yes	NIPDAU	Level-1-260C-UNLIM	-40 to 105	LMKDB 108Z100
LMKDB1108Z100RKPR.A	Active	Production	VQFN (RKP) | 40	2500 | LARGE T&R	Yes	NIPDAU	Level-1-260C-UNLIM	-40 to 105	LMKDB 108Z100
LMKDB1108Z100RKPT	Active	Production	VQFN (RKP) | 40	250 | SMALL T&R	Yes	NIPDAU	Level-1-260C-UNLIM	-40 to 105	LMKDB 108Z100
LMKDB1108Z100RKPT.A	Active	Production	VQFN (RKP) | 40	250 | SMALL T&R	Yes	NIPDAU	Level-1-260C-UNLIM	-40 to 105	LMKDB 108Z100

Orderable part number	Status (1)	Material type (2)	Package | Pins	Package qty | Carrier	RoHS (3)	Lead finish/ Ball material (4)	MSL rating/ Peak reflow (5)	Op temp (°C)	Part marking (6)
LMKDB1108Z85RKPR	Active	Production	VQFN (RKP) | 40	2500 | LARGE T&R	Yes	NIPDAU	Level-1-260C-UNLIM	-40 to 105	LMKDB 1108Z85
LMKDB1108Z85RKPR.A	Active	Production	VQFN (RKP) | 40	2500 | LARGE T&R	Yes	NIPDAU	Level-1-260C-UNLIM	-40 to 105	LMKDB 1108Z85
LMKDB1108Z85RKPT	Active	Production	VQFN (RKP) | 40	250 | SMALL T&R	Yes	NIPDAU	Level-1-260C-UNLIM	-40 to 105	LMKDB 1108Z85
LMKDB1108Z85RKPT.A	Active	Production	VQFN (RKP) | 40	250 | SMALL T&R	Yes	NIPDAU	Level-1-260C-UNLIM	-40 to 105	LMKDB 1108Z85
LMKDB1120FS85NPPR	Active	Production	TLGA (NPP) | 80	4000 | LARGE T&R	Yes	NIPDAU	Level-3-260C-168 HR	-40 to 105	LMKDB 1120FA
LMKDB1120Z100NPPR	Active	Production	TLGA (NPP) | 80	2500 | LARGE T&R	Yes	NIPDAU	Level-3-260C-168 HR	-40 to 105	LMKDB 1120Z100
LMKDB1120Z100NPPR.A	Active	Production	TLGA (NPP) | 80	2500 | LARGE T&R	Yes	NIPDAU	Level-3-260C-168 HR	-40 to 105	LMKDB 1120Z100
LMKDB1120Z100NPPT	Active	Production	TLGA (NPP) | 80	250 | SMALL T&R	Yes	NIPDAU	Level-3-260C-168 HR	-40 to 105	LMKDB 1120Z100
LMKDB1120Z100NPPT.A	Active	Production	TLGA (NPP) | 80	250 | SMALL T&R	Yes	NIPDAU	Level-3-260C-168 HR	-40 to 105	LMKDB 1120Z100
LMKDB1120Z85NPPR	Active	Production	TLGA (NPP) | 80	2500 | LARGE T&R	Yes	NIPDAU	Level-3-260C-168 HR	-40 to 105	LMKDB 1120Z85
LMKDB1120Z85NPPR.A	Active	Production	TLGA (NPP) | 80	2500 | LARGE T&R	Yes	NIPDAU	Level-3-260C-168 HR	-40 to 105	LMKDB 1120Z85
LMKDB1120Z85NPPR.B	Active	Production	TLGA (NPP) | 80	2500 | LARGE T&R	Yes	NIPDAU	Level-3-260C-168 HR	-40 to 105	LMKDB 1120Z85
LMKDB1120Z85NPPT	Active	Production	TLGA (NPP) | 80	250 | SMALL T&R	Yes	NIPDAU	Level-3-260C-168 HR	-40 to 105	LMKDB 1120Z85
LMKDB1120Z85NPPT.A	Active	Production	TLGA (NPP) | 80	250 | SMALL T&R	Yes	NIPDAU	Level-3-260C-168 HR	-40 to 105	LMKDB 1120Z85
LMKDB1120Z85NPPT.B	Active	Production	TLGA (NPP) | 80	250 | SMALL T&R	Yes	NIPDAU	Level-3-260C-168 HR	-40 to 105	LMKDB 1120Z85

(1) **Status:** For more details on status, see our product life cycle.

(2) **Material type:** When designated, preproduction parts are prototypes/experimental devices, and are not yet approved or released for full production. Testing and final process, including without limitation quality assurance, reliability performance testing, and/or process qualification, may not yet be complete, and this item is subject to further changes or possible discontinuation. If available for ordering, purchases will be subject to an additional waiver at checkout, and are intended for early internal evaluation purposes only. These items are sold without warranties of any kind.

(3) **RoHS values:** Yes, No, RoHS Exempt. See the TI RoHS Statement for additional information and value definition.

(4) **Lead finish/Ball material:** Parts may have multiple material finish options. Finish options are separated by a vertical ruled line. Lead finish/Ball material values may wrap to two lines if the finish value exceeds the maximum column width.

(5) **MSL rating/Peak reflow:** The moisture sensitivity level ratings and peak solder (reflow) temperatures. In the event that a part has multiple moisture sensitivity ratings, only the lowest level per JEDEC standards is shown. Refer to the shipping label for the actual reflow temperature that will be used to mount the part to the printed circuit board.

(6) **Part marking:** There may be an additional marking, which relates to the logo, the lot trace code information, or the environmental category of the part.

Multiple part markings will be inside parentheses. Only one part marking contained in parentheses and separated by a "~" will appear on a part. If a line is indented then it is a continuation of the previous line and the two combined represent the entire part marking for that device.

Important Information and Disclaimer: The information provided on this page represents TI's knowledge and belief as of the date that it is provided. TI bases its knowledge and belief on information provided by third parties, and makes no representation or warranty as to the accuracy of such information. Efforts are underway to better integrate information from third parties. TI has taken and continues to take reasonable steps to provide representative and accurate information but may not have conducted destructive testing or chemical analysis on incoming materials and chemicals. TI and TI suppliers consider certain information to be proprietary, and thus CAS numbers and other limited information may not be available for release.

In no event shall TI's liability arising out of such information exceed the total purchase price of the TI part(s) at issue in this document sold by TI to Customer on an annual basis.

TAPE AND REEL INFORMATION

REEL DIMENSIONS

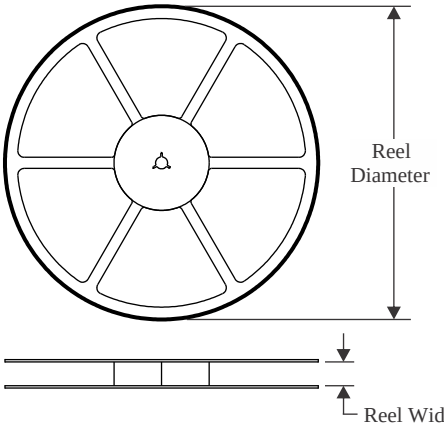

TAPE DIMENSIONS

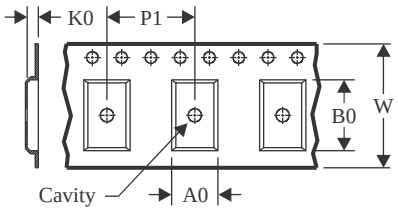

A0	Dimension designed to accommodate the component width
B0	Dimension designed to accommodate the component length
K0	Dimension designed to accommodate the component thickness
W	Overall width of the carrier tape
P1	Pitch between successive cavity centers

QUADRANT ASSIGNMENTS FOR PIN 1 ORIENTATION IN TAPE

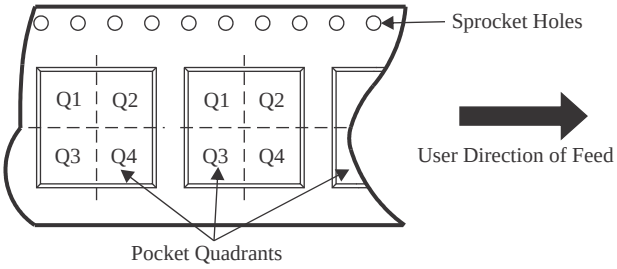

*All dimensions are nominal

Device	Package Type	Package Drawing	Pins	SPQ	Reel Diameter (mm)	Reel Width W1 (mm)	A0 (mm)	B0 (mm)	K0 (mm)	P1 (mm)	W (mm)	Pin1 Quadrant
LMKDB1104FS85REXR	VQFN	REX	28	3000	330.0	12.4	4.25	4.25	1.15	8.0	12.0	Q2
LMKDB1108FS85RKPR	VQFN	RKP	40	3000	330.0	12.4	5.3	5.3	1.1	8.0	12.0	Q2
LMKDB1108Z100RKPR	VQFN	RKP	40	2500	330.0	12.4	5.3	5.3	1.1	8.0	12.0	Q2
LMKDB1108Z100RKPT	VQFN	RKP	40	250	180.0	12.4	5.3	5.3	1.1	8.0	12.0	Q2
LMKDB1108Z85RKPR	VQFN	RKP	40	2500	330.0	12.4	5.3	5.3	1.1	8.0	12.0	Q2
LMKDB1108Z85RKPT	VQFN	RKP	40	250	180.0	12.4	5.3	5.3	1.1	8.0	12.0	Q2
LMKDB1120FS85NPPR	TLGA	NPP	80	4000	330.0	16.4	6.3	6.3	1.1	12.0	16.0	Q2
LMKDB1120Z100NPPR	TLGA	NPP	80	2500	330.0	16.4	6.3	6.3	1.1	12.0	16.0	Q2
LMKDB1120Z100NPPT	TLGA	NPP	80	250	180.0	16.4	6.3	6.3	1.1	12.0	16.0	Q2
LMKDB1120Z85NPPT	TLGA	NPP	80	250	180.0	16.4	6.3	6.3	1.1	12.0	16.0	Q2

TAPE AND REEL BOX DIMENSIONS

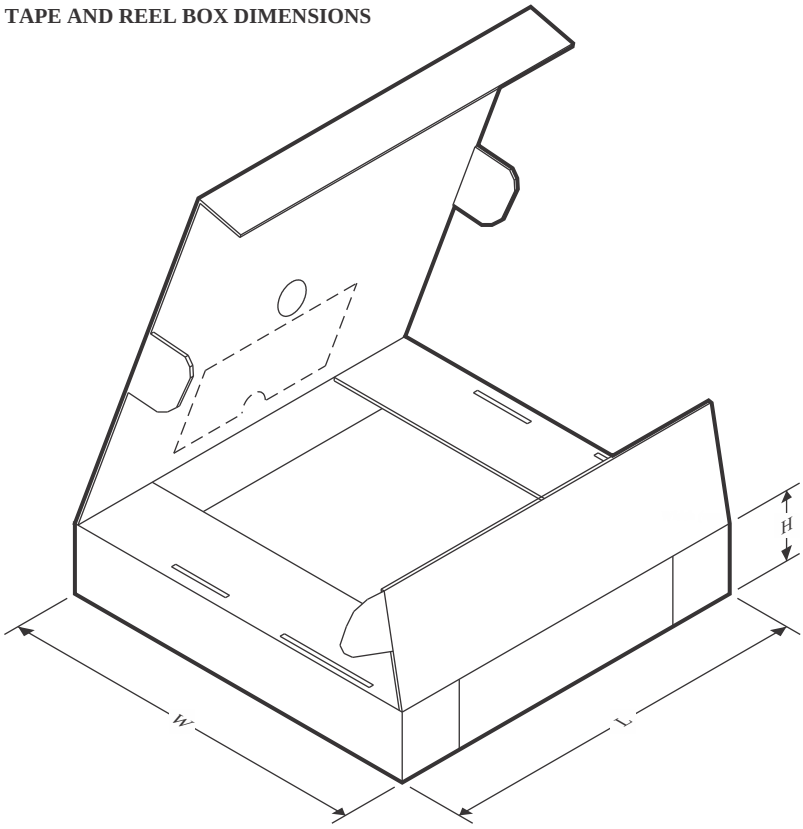

*All dimensions are nominal

Device	Package Type	Package Drawing	Pins	SPQ	Length (mm)	Width (mm)	Height (mm)
LMKDB1104FS85REXR	VQFN	REX	28	3000	360.0	360.0	36.0
LMKDB1108FS85RKPR	VQFN	RKP	40	3000	360.0	360.0	36.0
LMKDB1108Z100RKPR	VQFN	RKP	40	2500	367.0	367.0	35.0
LMKDB1108Z100RKPT	VQFN	RKP	40	250	210.0	185.0	35.0
LMKDB1108Z85RKPR	VQFN	RKP	40	2500	367.0	367.0	35.0
LMKDB1108Z85RKPT	VQFN	RKP	40	250	210.0	185.0	35.0
LMKDB1120FS85NPPR	TLGA	NPP	80	4000	367.0	367.0	38.0
LMKDB1120Z100NPPR	TLGA	NPP	80	2500	367.0	367.0	38.0
LMKDB1120Z100NPPT	TLGA	NPP	80	250	210.0	185.0	35.0
LMKDB1120Z85NPPT	TLGA	NPP	80	250	210.0	185.0	35.0

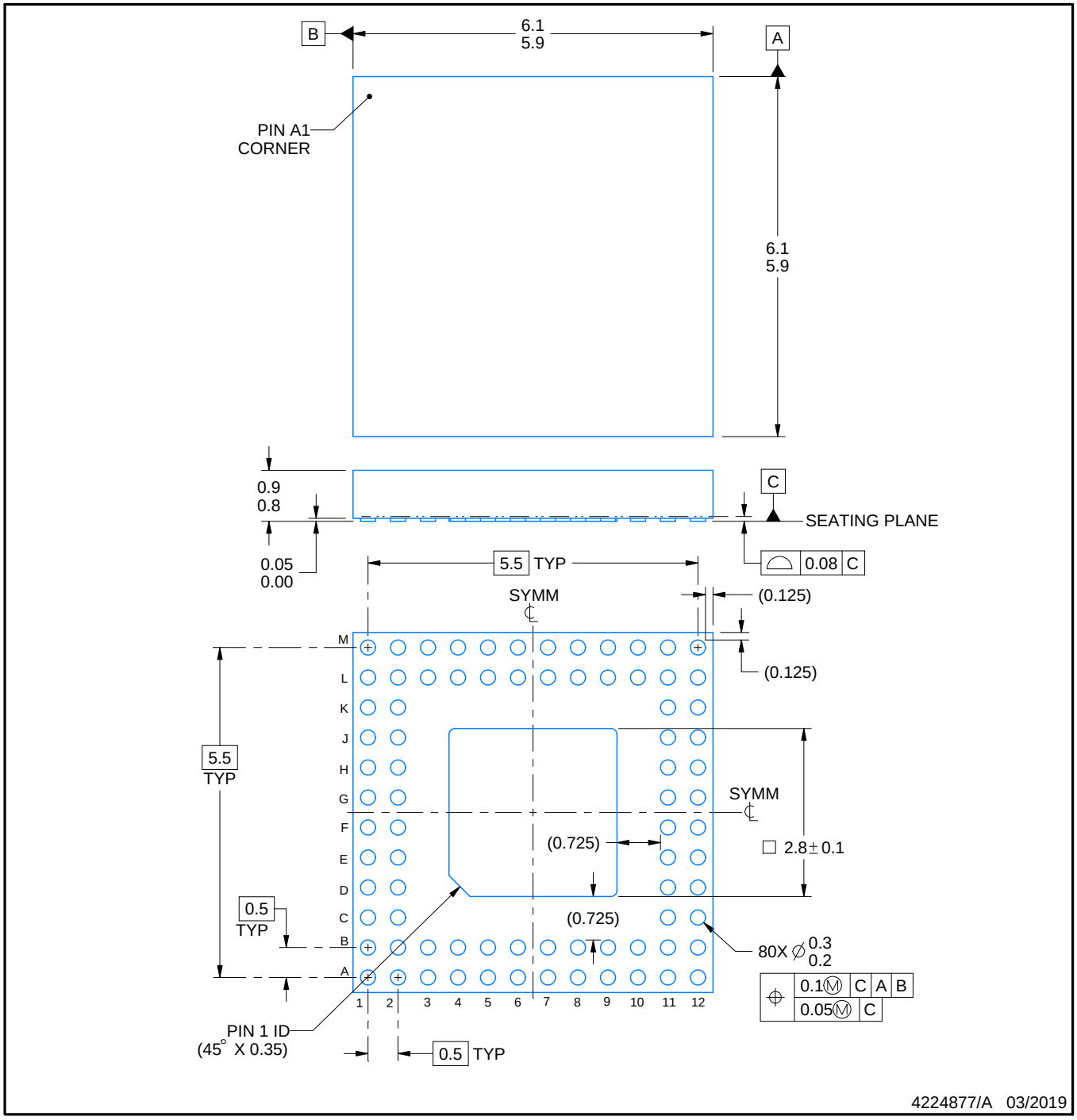

NOTES:

1. All linear dimensions are in millimeters. Any dimensions in parenthesis are for reference only. Dimensioning and tolerancing per ASME Y14.5M.
2. This drawing is subject to change without notice.
3. The package thermal pad must be soldered to the printed circuit board for thermal and mechanical performance.

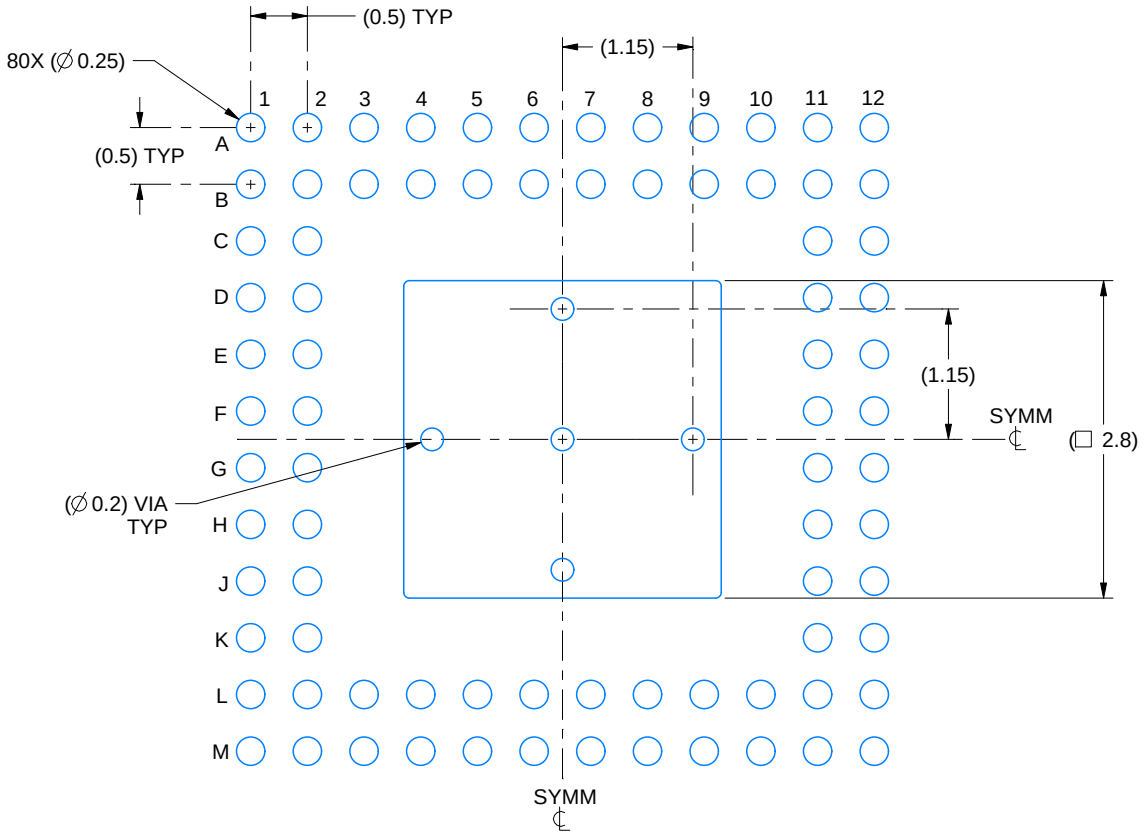

LAND PATTERN EXAMPLE
EXPOSED METAL SHOWN
SCALE: 15X

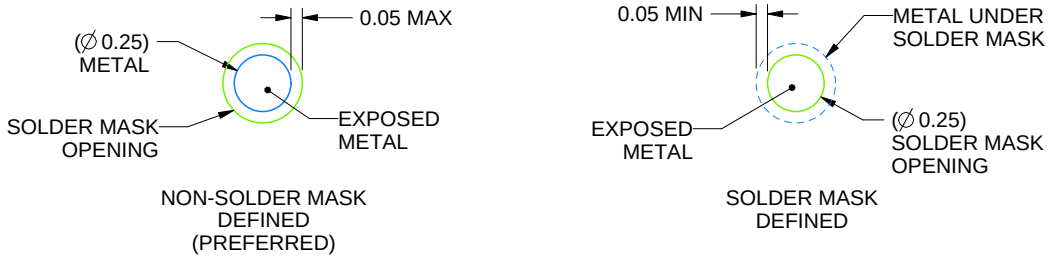

SOLDER MASK DETAILS
NOT TO SCALE

4224877/A 03/2019

NOTES: (continued)

4. Final dimensions may vary due to manufacturing tolerance considerations and also routing constraints. See Texas Instruments Literature No. SNVA009 (www.ti.com/lit/snva009).
5. Vias are optional depending on application, refer to device data sheet. If any vias are implemented, refer to their locations shown on this view. It is recommended that vias under paste be filled, plugged or tented.

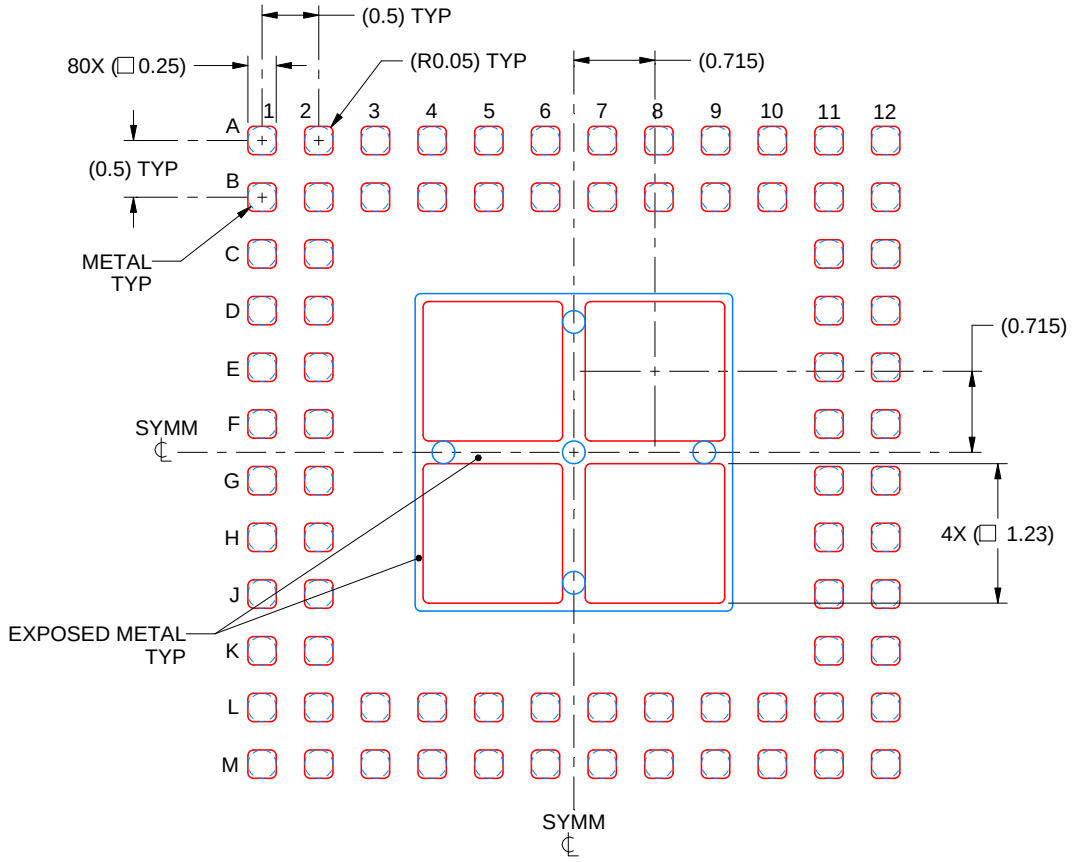

SOLDER PASTE EXAMPLE
BASED ON 0.1 mm THICK STENCIL
SCALE: 15X

4224877/A 03/2019

NOTES: (continued)

6. Laser cutting apertures with trapezoidal walls and rounded corners may offer better paste release.

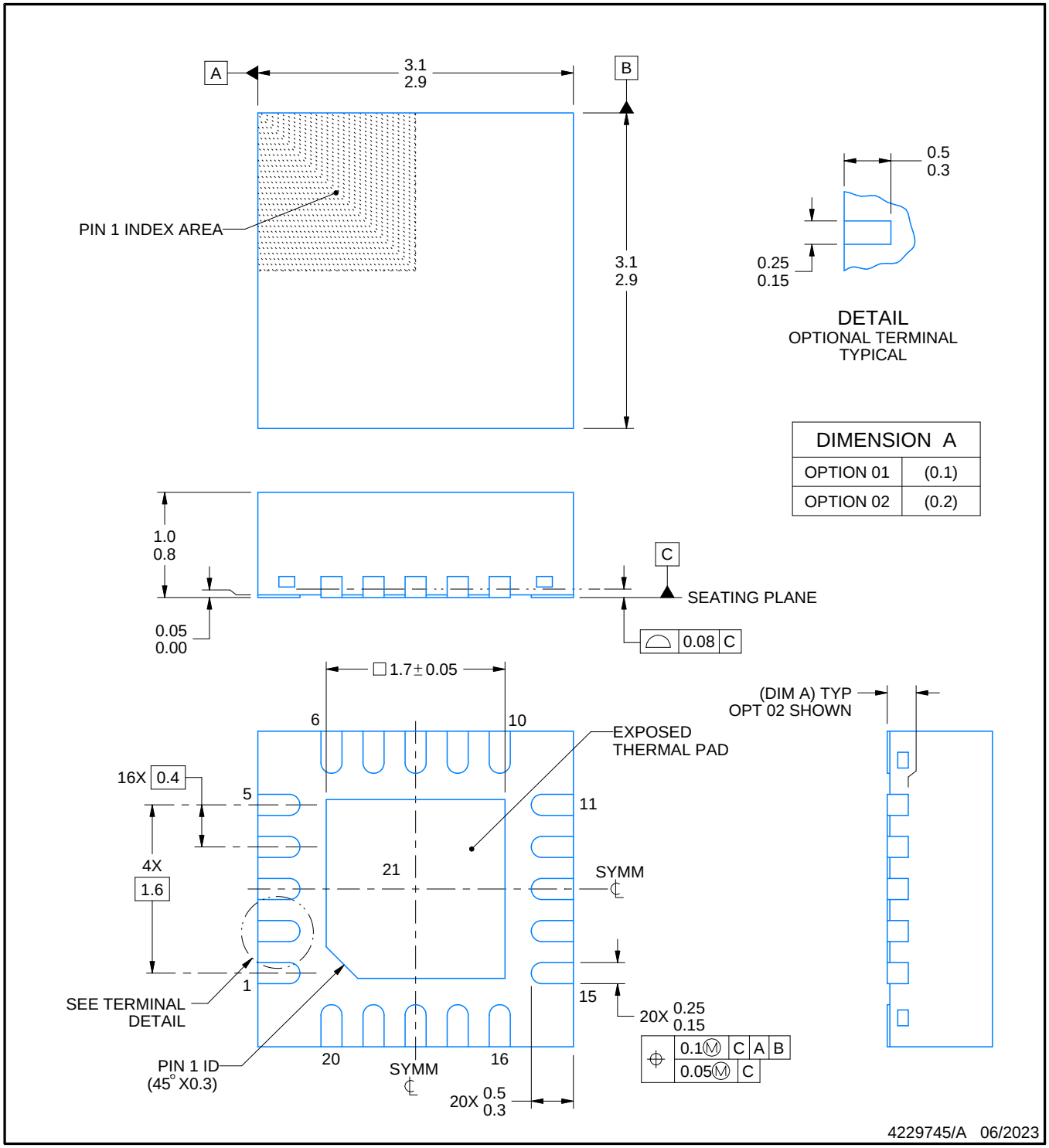

NOTES:

1. All linear dimensions are in millimeters. Any dimensions in parenthesis are for reference only. Dimensioning and tolerancing per ASME Y14.5M.
2. This drawing is subject to change without notice.
3. The package thermal pad must be soldered to the printed circuit board for thermal and mechanical performance.

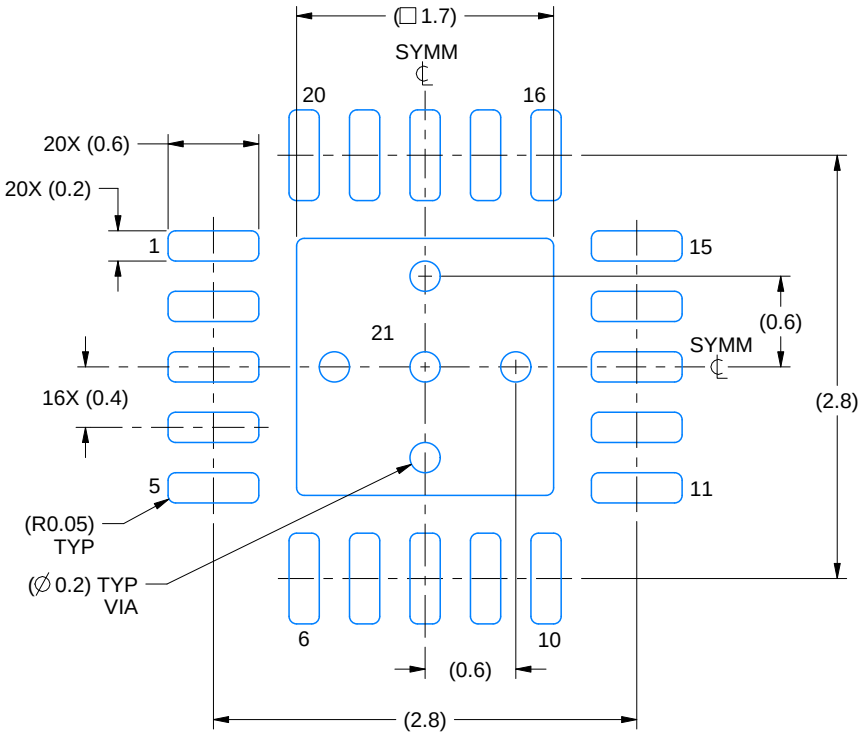

LAND PATTERN EXAMPLE
EXPOSED METAL SHOWN
SCALE:20X

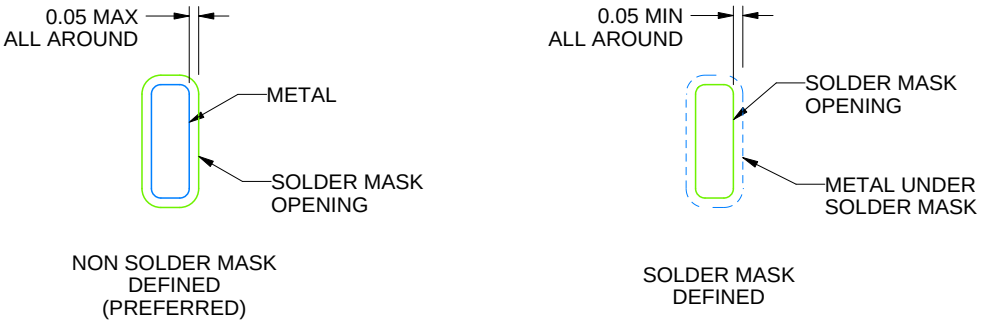

SOLDER MASK DETAILS

4229745/A 06/2023

NOTES: (continued)

4. This package is designed to be soldered to a thermal pad on the board. For more information, see Texas Instruments literature number SLUA271 (www.ti.com/lit/slua271).
5. Vias are optional depending on application, refer to device data sheet. If any vias are implemented, refer to their locations shown on this view. It is recommended that vias under paste be filled, plugged or tented.

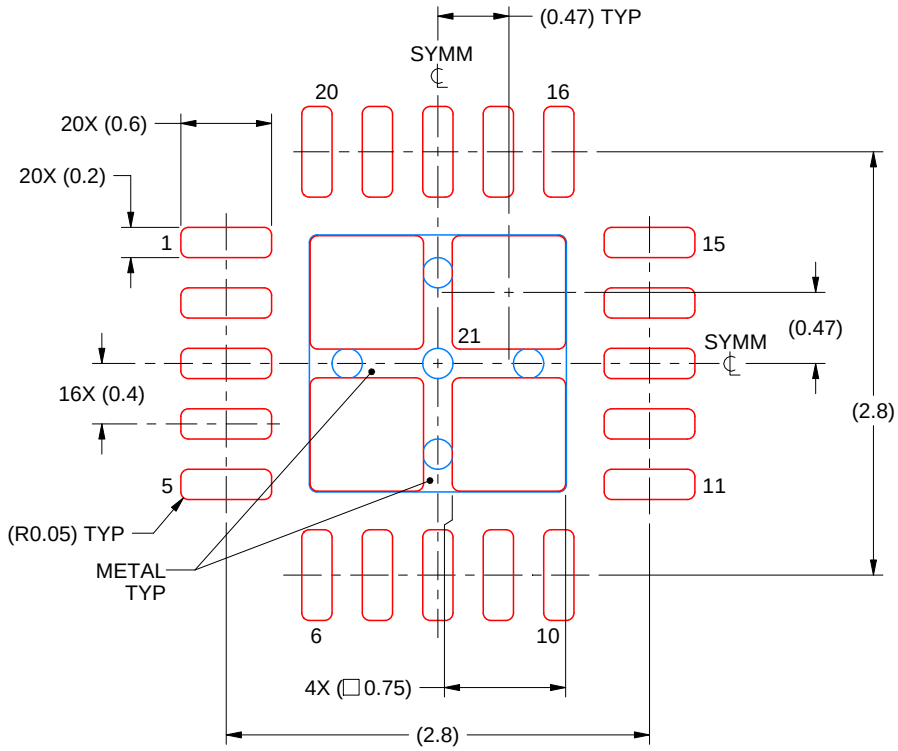

SOLDER PASTE EXAMPLE
BASED ON 0.1 mm THICK STENCIL

EXPOSED PAD 21:
78% PRINTED SOLDER COVERAGE BY AREA UNDER PACKAGE
SCALE:20X

4229745/A 06/2023

NOTES: (continued)

6. Laser cutting apertures with trapezoidal walls and rounded corners may offer better paste release. IPC-7525 may have alternate design recommendations.

GENERIC PACKAGE VIEW

RKP 40

VQFN - 1 mm max height

5 x 5, 0.4 mm pitch

PLASTIC QUAD FLATPACK - NO LEAD

This image is a representation of the package family, actual package may vary.
Refer to the product data sheet for package details.

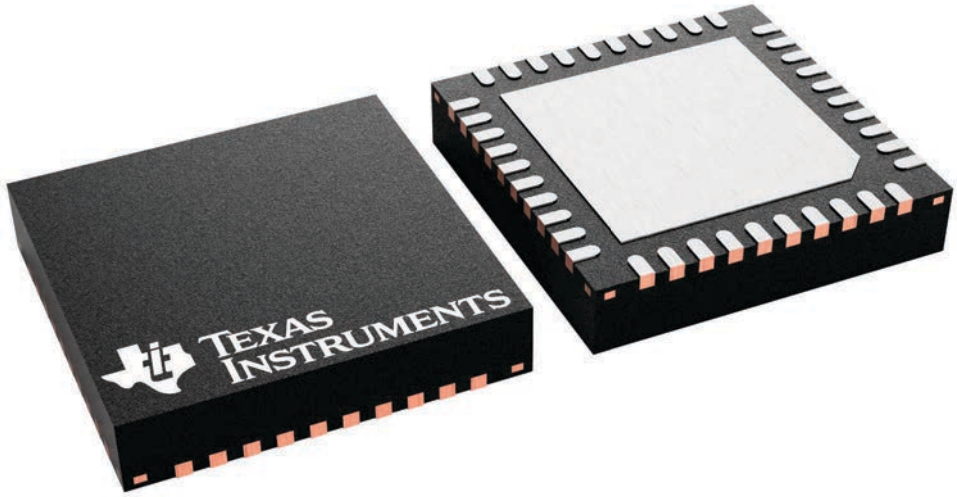

4229305/A

PLASTIC QUAD FLATPACK- NO LEAD

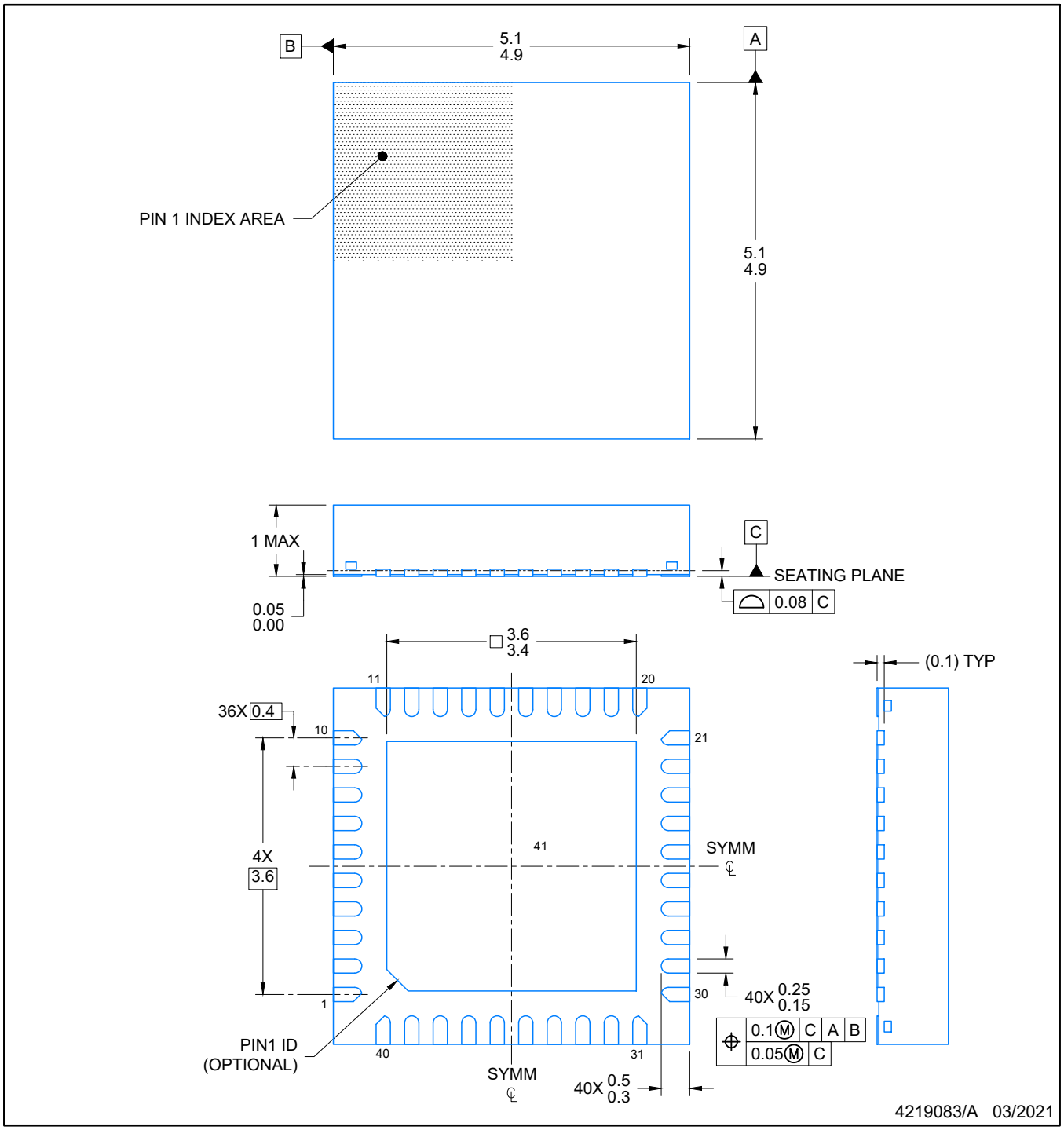

NOTES:

1. All linear dimensions are in millimeters. Any dimensions in parenthesis are for reference only. Dimensioning and tolerancing per ASME Y14.5M.
2. This drawing is subject to change without notice.
3. The package thermal pad must be soldered to the printed circuit board for optimal thermal and mechanical performance.

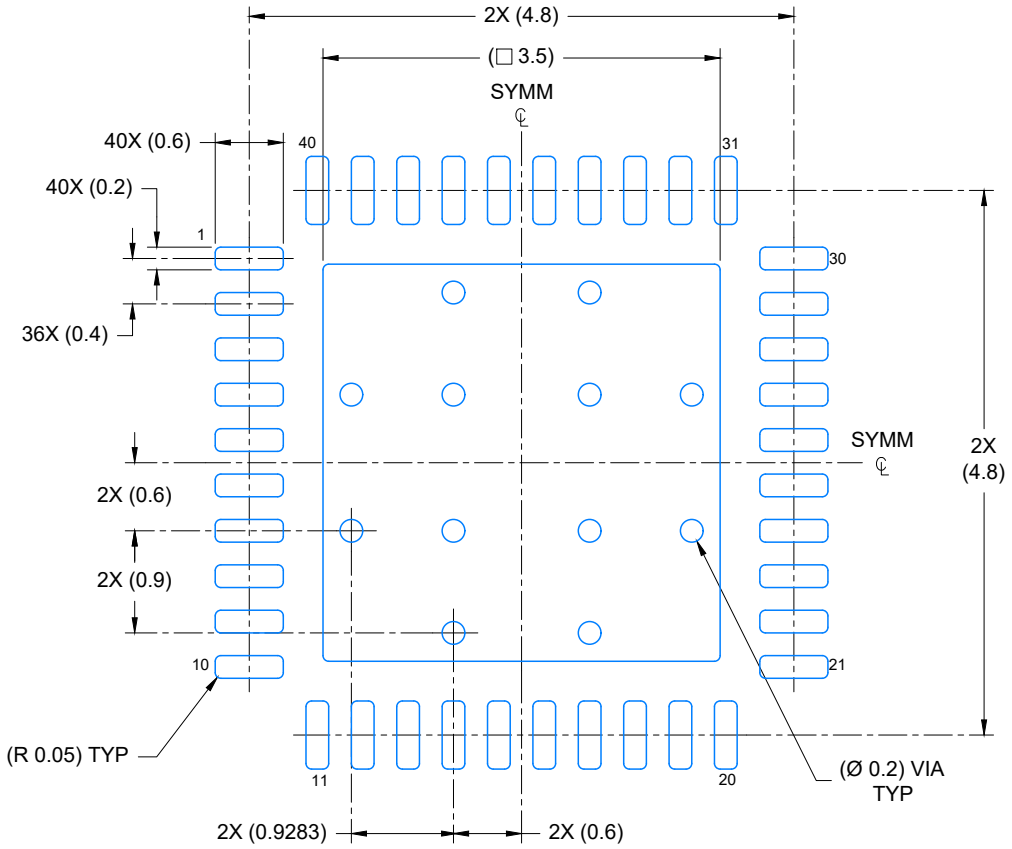

LAND PATTERN EXAMPLE
EXPOSED METAL SHOWN
SCALE: 15X

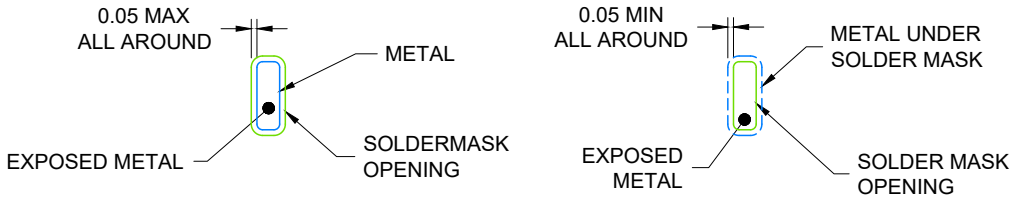

NON- SOLDER MASK DEFINED (PREFERRED)

SOLDER MASK DEFINED

SOLDER MASK DETAILS

4219083/A 03/2021

NOTES: (continued)

4. This package is designed to be soldered to a thermal pad on the board. For more information, see Texas Instruments literature number SLUA271 (www.ti.com/lit/slua271).
5. Vias are optional depending on application, refer to device data sheet. If any vias are implemented, refer to their locations shown on this view. It is recommended that vias under paste be filled, plugged or tented.

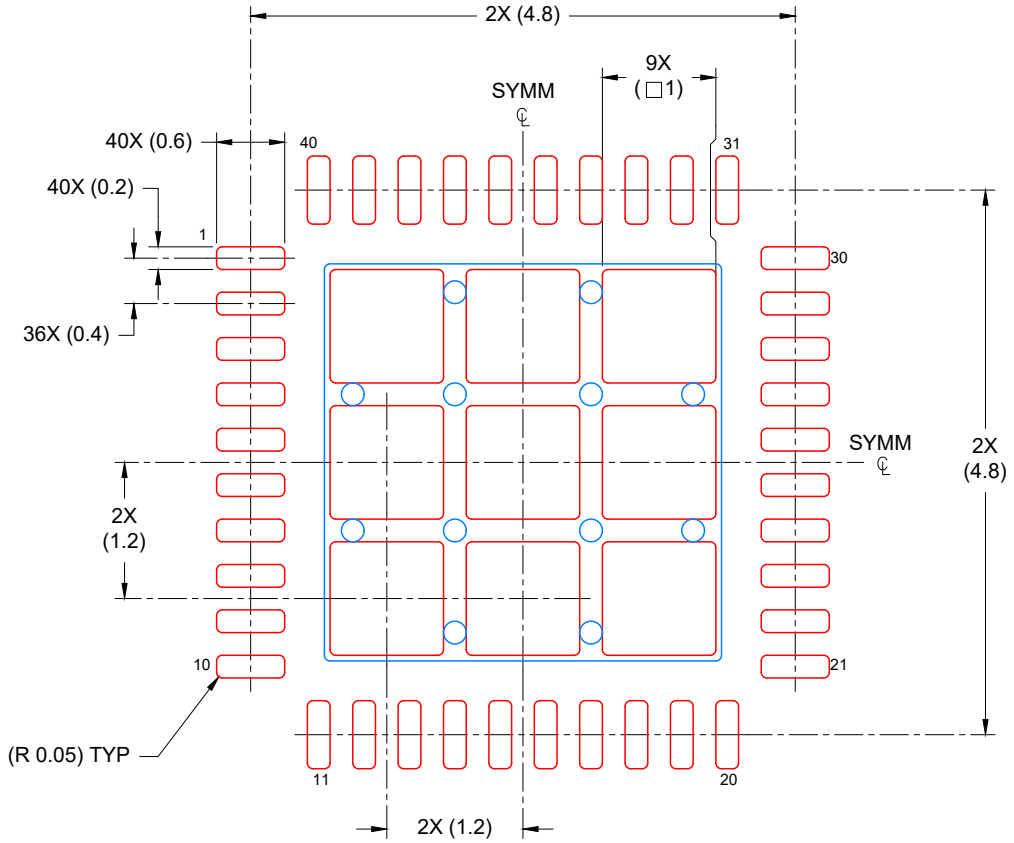

SOLDER PASTE EXAMPLE
BASED ON 0.125 mm THICK STENCIL

EXPOSED PAD
74% PRINTED COVERAGE BY AREA
SCALE: 15X

4219083/A 03/2021

NOTES: (continued)

6. Laser cutting apertures with trapezoidal walls and rounded corners may offer better paste release. IPC-7525 may have alternate design recommendations.

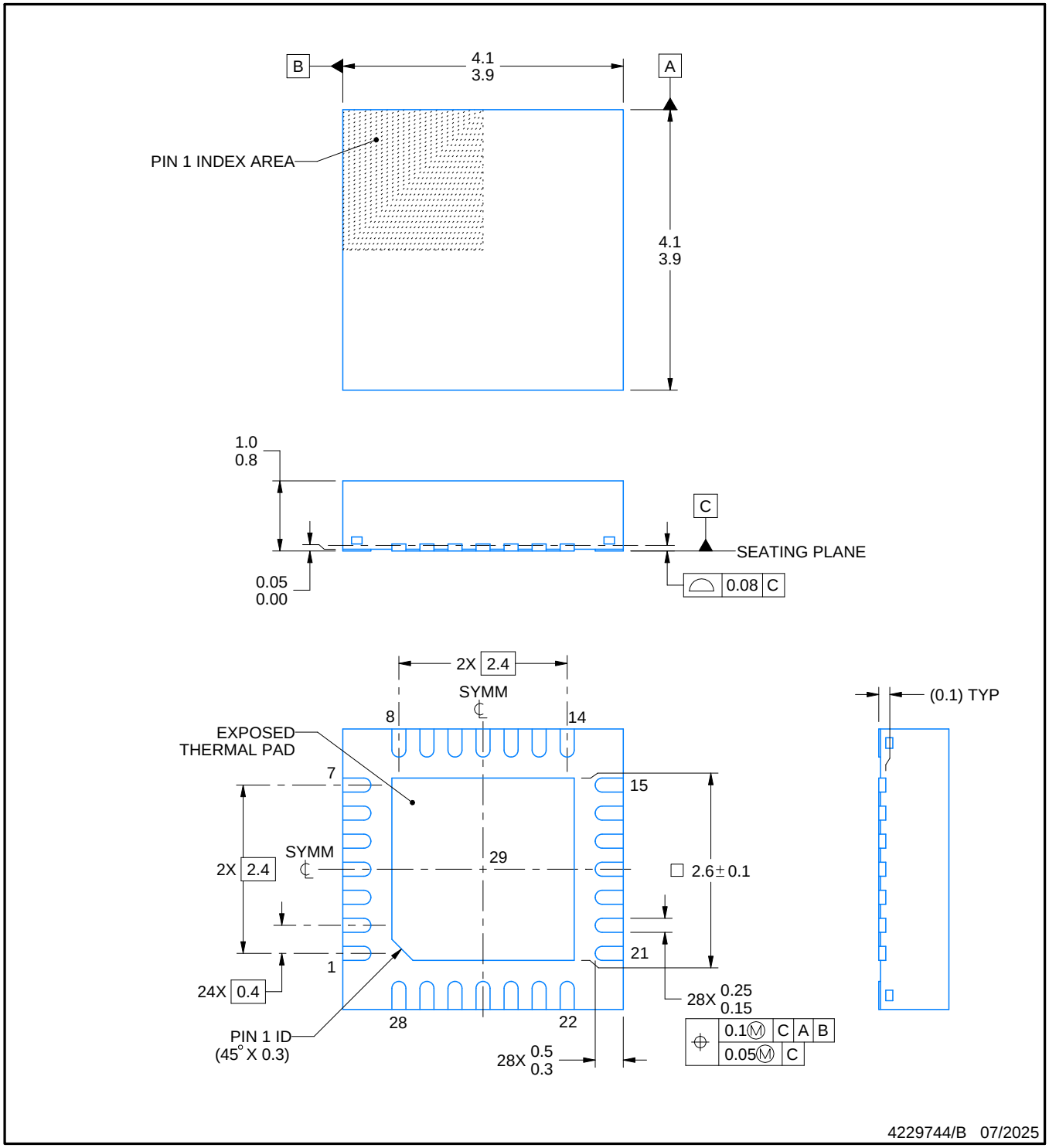

NOTES:

1. All linear dimensions are in millimeters. Any dimensions in parenthesis are for reference only. Dimensioning and tolerancing per ASME Y14.5M.
2. This drawing is subject to change without notice.
3. The package thermal pad must be soldered to the printed circuit board for thermal and mechanical performance.

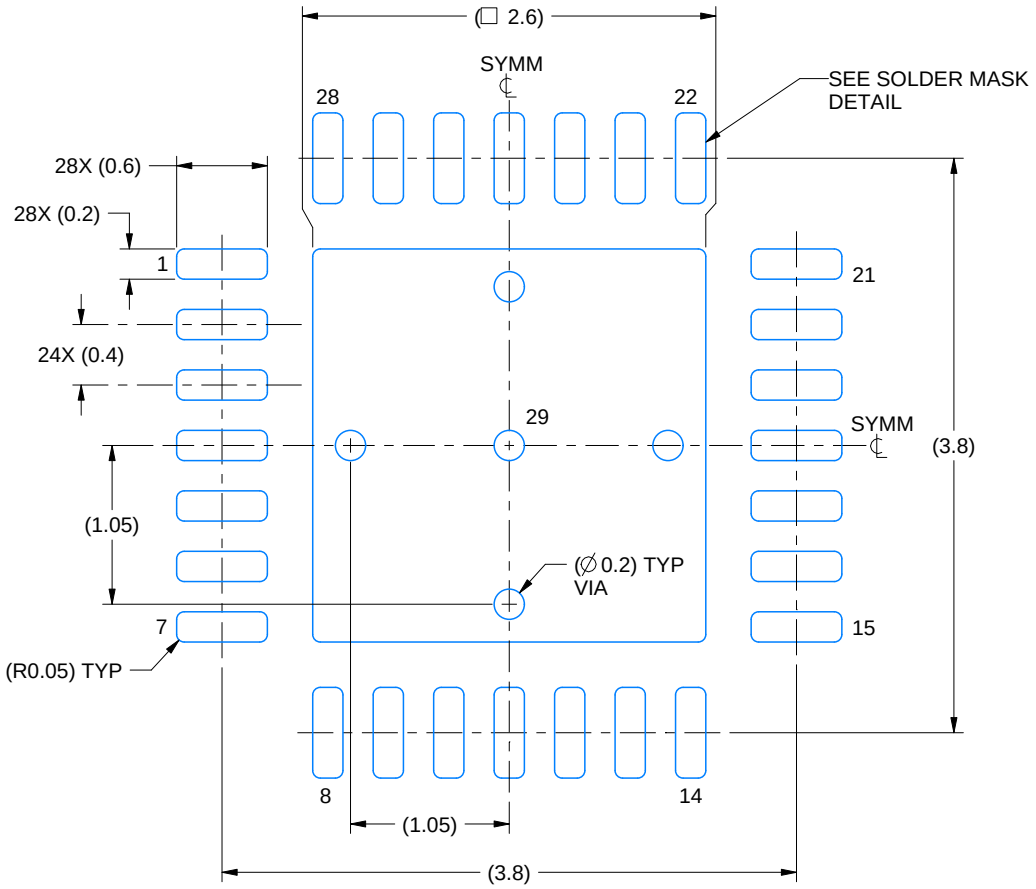

LAND PATTERN EXAMPLE
EXPOSED METAL SHOWN
SCALE: 20X

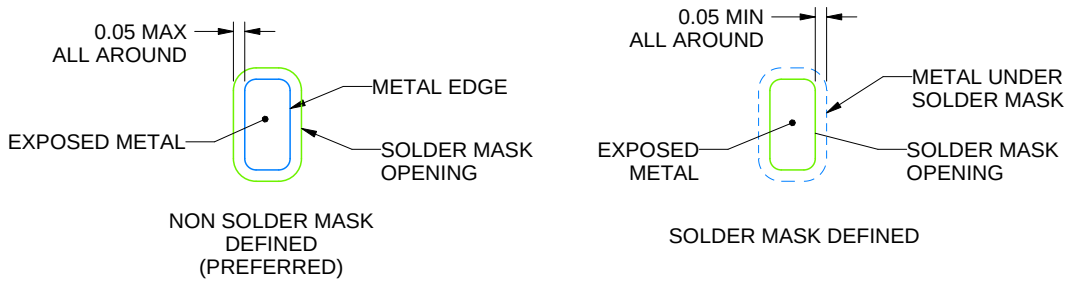

SOLDER MASK DETAILS

4229744/B 07/2025

NOTES: (continued)

4. This package is designed to be soldered to a thermal pad on the board. For more information, see Texas Instruments literature number SLUA271 (www.ti.com/lit/slua271).
5. Vias are optional depending on application, refer to device data sheet. If any vias are implemented, refer to their locations shown on this view. It is recommended that vias under paste be filled, plugged or tented.

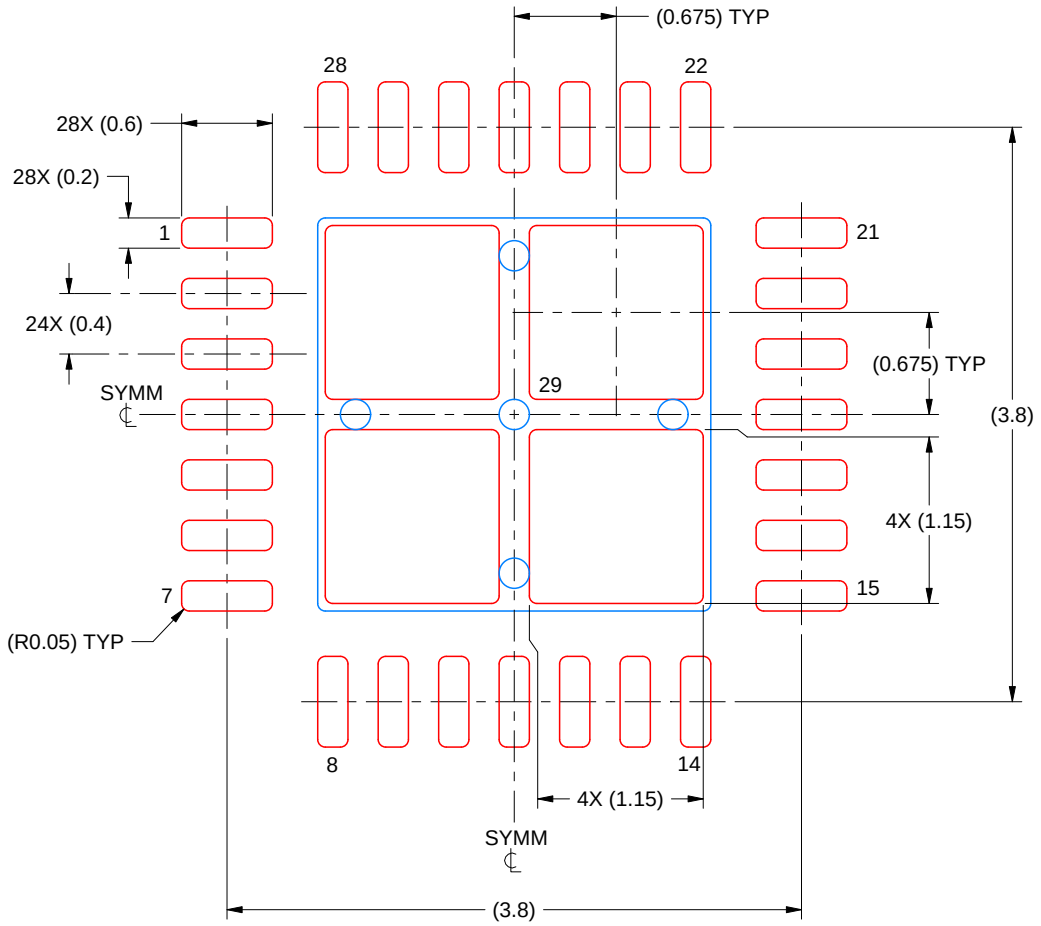

SOLDER PASTE EXAMPLE
BASED ON 0.125 MM THICK STENCIL
SCALE: 20X

EXPOSED PAD 29
78% PRINTED SOLDER COVERAGE BY AREA UNDER PACKAGE

4229744/B 07/2025

NOTES: (continued)

6. Laser cutting apertures with trapezoidal walls and rounded corners may offer better paste release. IPC-7525 may have alternate design recommendations.

IMPORTANT NOTICE AND DISCLAIMER

TI PROVIDES TECHNICAL AND RELIABILITY DATA (INCLUDING DATA SHEETS), DESIGN RESOURCES (INCLUDING REFERENCE DESIGNS), APPLICATION OR OTHER DESIGN ADVICE, WEB TOOLS, SAFETY INFORMATION, AND OTHER RESOURCES “AS IS” AND WITH ALL FAULTS, AND DISCLAIMS ALL WARRANTIES, EXPRESS AND IMPLIED, INCLUDING WITHOUT LIMITATION ANY IMPLIED WARRANTIES OF MERCHANTABILITY, FITNESS FOR A PARTICULAR PURPOSE OR NON-INFRINGEMENT OF THIRD PARTY INTELLECTUAL PROPERTY RIGHTS.

These resources are intended for skilled developers designing with TI products. You are solely responsible for (1) selecting the appropriate TI products for your application, (2) designing, validating and testing your application, and (3) ensuring your application meets applicable standards, and any other safety, security, regulatory or other requirements.

These resources are subject to change without notice. TI grants you permission to use these resources only for development of an application that uses the TI products described in the resource. Other reproduction and display of these resources is prohibited. No license is granted to any other TI intellectual property right or to any third party intellectual property right. TI disclaims responsibility for, and you will fully indemnify TI and its representatives against, any claims, damages, costs, losses, and liabilities arising out of your use of these resources.

TI’s products are provided subject to TI’s Terms of Sale or other applicable terms available either on ti.com or provided in conjunction with such TI products. TI’s provision of these resources does not expand or otherwise alter TI’s applicable warranties or warranty disclaimers for TI products.

TI objects to and rejects any additional or different terms you may have proposed.

Mailing Address: Texas Instruments, Post Office Box 655303, Dallas, Texas 75265
Copyright © 2025, Texas Instruments Incorporated