AC and Pulse Film Foil Capacitors
KP Radial Potted Type

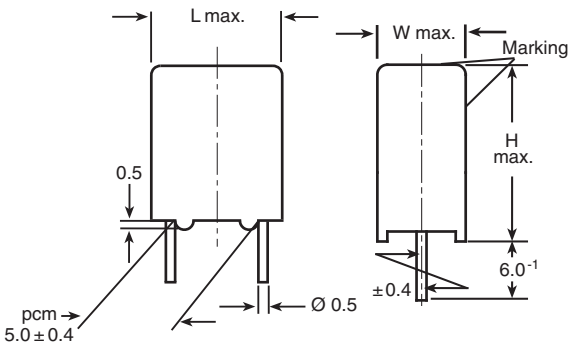

Dimensions in millimeters

MAIN APPLICATIONS

Oscillator, timing and LC/RC filter circuits, high frequency coupling of fast digital and analog IC's.

REFERENCE STANDARDS

IEC 60384-13

MARKING

C-value; tolerance; rated voltage; sub-class; manufacturer's type; code for dielectric material; manufacturer's location; manufacturer's logo; year and week

DIELECTRIC

Polypropylene film

ELECTRODES

Tin foil

CONSTRUCTION

Mono construction

RATED DC VOLTAGES

63 V, 250 V, 630 V

RATED AC VOLTAGES

40 V, 160 V, 250 V

FEATURES

- 5 mm lead pitch
- Supplied loose in box taped in ammopack or reel
- Material categorization: for definitions of compliance please see www.vishay.com/doc?99912

Pb-free

e3

RoHS COMPLIANT

HALOGEN FREE

ENCAPSULATION

Plastic case, epoxy resin sealed, flame retardant UL-class 94 V-0

CLIMATIC TESTING CLASS ACCORDING TO IEC 60068-1

55/100/56

CAPACITANCE RANGE

100 pF to 0.022 µF

CAPACITANCE TOLERANCE

± 10 % , ± 5 %, ± 2.5 %, ± 2 %, ± 1 %

LEADS

Tinned wire

MAXIMUM APPLICATION TEMPERATURE

100 °C

DETAIL SPECIFICATION

For more detailed data and test requirements contact: dc-film@vishay.com

For technical questions, contact: dc-film@vishay.com

THIS DOCUMENT IS SUBJECT TO CHANGE WITHOUT NOTICE. THE PRODUCTS DESCRIBED HEREIN AND THIS DOCUMENT ARE SUBJECT TO SPECIFIC DISCLAIMERS, SET FORTH AT www.vishay.com/doc?91000

COMPOSITION OF CATALOG NUMBER

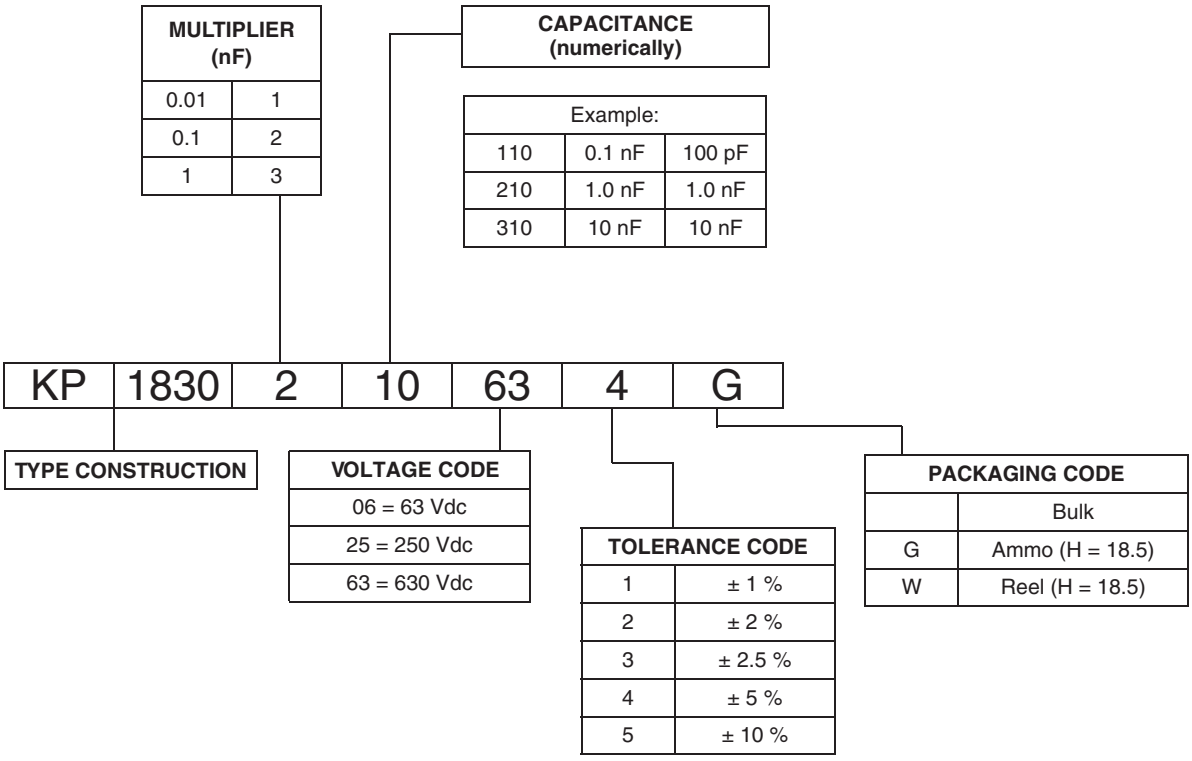

SPECIFIC REFERENCE DATA

DESCRIPTION	VALUE			
Tangent of loss angle:	at 1 kHz	at 10 kHz	at 100 kHz	at 1 MHz
C ≤ 1000 pF	-	5×10^{-4}	-	10×10^{-4}
1000 pF < C ≤ 5000 pF	-	5×10^{-4}	10×10^{-4}	-
5000 pF < C ≤ 20 000 pF	-	10×10^{-4}	15×10^{-4}	-
20 000 pF < C < 33 000 pF	-	15×10^{-4}	25×10^{-4}	-

Pitch (mm)	Maximum pulse rise time $(dU/dt)_R$ [V/µs]
5	> 10 000

R between leads, for C ≤ 0.33 µF at 100 V, 1 min	> 500 000 MΩ
R between leads and case, 100 V, 1 min	> 30 000 MΩ
Withstanding (DC) voltage (cut off current 10 mA), rise time 100 V/s	1.6 x U_{RDC}, 1 min
Withstanding (DC) voltage between leads and case	2 x U_{RDC}, 1 min
Maximum application temperature	100 °C

For technical questions, contact: dc-film@vishay.com

THIS DOCUMENT IS SUBJECT TO CHANGE WITHOUT NOTICE. THE PRODUCTS DESCRIBED HEREIN AND THIS DOCUMENT ARE SUBJECT TO SPECIFIC DISCLAIMERS, SET FORTH AT www.vishay.com/doc?91000

CAPACITANCE	CAPACITANCE CODE	VOLTAGE CODE 06 63 V_{DC} / 40 V_{AC}			VOLTAGE CODE 25 250 V_{DC} / 160 V_{AC}			VOLTAGE CODE 63 630 V_{DC} / 250 V_{AC}		
		W (mm)	H (mm)	L (mm)	W (mm)	H (mm)	L (mm)	W (mm)	H (mm)	L (mm)
100 pF	-110	-	-	-	-	-	-	4.5	6.0	7.2
110 pF	-111	-	-	-	-	-	-	4.5	6.0	7.2
120 pF	-112	-	-	-	-	-	-	4.5	6.0	7.2
130 pF	-113	-	-	-	-	-	-	4.5	6.0	7.2
150 pF	-115	-	-	-	-	-	-	4.5	6.0	7.2
160 pF	-116	-	-	-	-	-	-	4.5	6.0	7.2
180 pF	-118	-	-	-	-	-	-	4.5	6.0	7.2
200 pF	-120	-	-	-	-	-	-	4.5	6.0	7.2
220 pF	-122	-	-	-	-	-	-	4.5	6.0	7.2
240 pF	-124	-	-	-	-	-	-	4.5	6.0	7.2
270 pF	-127	-	-	-	-	-	-	4.5	6.0	7.2
300 pF	-130	-	-	-	-	-	-	4.5	6.0	7.2
330 pF	-133	-	-	-	-	-	-	4.5	6.0	7.2
360 pF	-136	-	-	-	-	-	-	4.5	6.0	7.2
390 pF	-139	-	-	-	-	-	-	4.5	6.0	7.2
430 pF	-143	-	-	-	-	-	-	4.5	6.0	7.2
470 pF	-147	-	-	-	-	-	-	4.5	6.0	7.2
510 pF	-151	-	-	-	-	-	-	4.5	6.0	7.2
560 pF	-156	-	-	-	-	-	-	4.5	6.0	7.2
620 pF	-162	-	-	-	-	-	-	4.5	6.0	7.2
680 pF	-168	-	-	-	-	-	-	4.5	6.0	7.2
750 pF	-175	-	-	-	-	-	-	4.5	6.0	7.2
820 pF	-182	-	-	-	-	-	-	4.5	6.0	7.2
910 pF	-191	-	-	-	-	-	-	4.5	6.0	7.2
1000 pF	-210	-	-	-	-	-	-	4.5	6.0	7.2
1100 pF	-211	-	-	-	-	-	-	4.5	6.0	7.2
1200 pF	-212	-	-	-	-	-	-	4.5	6.0	7.2
1300 pF	-213	-	-	-	-	-	-	4.5	6.0	7.2
1500 pF	-215	-	-	-	-	-	-	4.5	6.0	7.2
1600 pF	-216	-	-	-	-	-	-	4.5	6.0	7.2
1800 pF	-218	-	-	-	-	-	-	4.5	6.0	7.2
2000 pF	-220	-	-	-	4.5	6.0	7.2	5.5	7.0	7.2
2200 pF	-222	-	-	-	4.5	6.0	7.2	5.5	7.0	7.2
2400 pF	-224	4.5	6.0	7.2	4.5	6.0	7.2	5.5	7.0	7.2
2700 pF	-227	4.5	6.0	7.2	4.5	6.0	7.2	5.5	7.0	7.2
3000 pF	-230	4.5	6.0	7.2	5.5	7.0	7.2	5.5	7.0	7.2
3300 pF	-233	4.5	6.0	7.2	5.5	7.0	7.2	5.5	7.0	7.2
3600 pF	-236	4.5	6.0	7.2	5.5	7.0	7.2	7.5	7.0	7.2
3900 pF	-239	4.5	6.0	7.2	5.5	7.0	7.2	7.5	9.0	7.2
4300 pF	-243	4.5	6.0	7.2	5.5	7.0	7.2	7.5	9.0	7.2
4700 pF	-247	4.5	6.0	7.2	5.5	7.0	7.2	7.5	9.0	7.2
5100 pF	-251	4.5	6.0	7.2	7.5	9.0	7.2	7.5	9.0	7.2
5600 pF	-256	4.5	6.0	7.2	7.5	9.0	7.2	7.5	9.0	7.2
6200 pF	-262	4.5	6.0	7.2	7.5	9.0	7.2	7.5	9.0	7.2
6800 pF	-268	4.5	6.0	7.2	7.5	9.0	7.2	7.5	9.0	7.2
7500 pF	-275	5.5	7.0	7.2	7.5	9.0	7.2	9.0	10.0	7.2
8200 pF	-282	5.5	7.0	7.2	7.5	9.0	7.2	9.0	10.0	7.2
9100 pF	-291	5.5	7.0	7.2	7.5	9.0	7.2	9.0	10.0	7.2
0.010 µF	-310	5.5	7.0	7.2	7.5	9.0	7.2	9.0	10.0	7.2
0.011 µF	-311	5.5	7.0	7.2	9.0	10.0	7.2	-	-	-
0.012 µF	-312	5.5	7.0	7.2	9.0	10.0	7.2	-	-	-
0.013 µF	-313	5.5	7.0	7.2	9.0	10.0	7.2	-	-	-
0.015 µF	-315	5.5	7.0	7.2	9.0	10.0	7.2	-	-	-
0.016 µF	-316	9.0	10.0	7.2	-	-	-	-	-	-
0.018 µF	-318	9.0	10.0	7.2	-	-	-	-	-	-
0.020 µF	-320	9.0	10.0	7.2	-	-	-	-	-	-
0.022 µF	-322	7.5	9.0	7.2	-	-	-	-	-	-

Note

- Further C-values upon request

For technical questions, contact: dc-film@vishay.com
THIS DOCUMENT IS SUBJECT TO CHANGE WITHOUT NOTICE. THE PRODUCTS DESCRIBED HEREIN AND THIS DOCUMENT ARE SUBJECT TO SPECIFIC DISCLAIMERS, SET FORTH AT www.vishay.com/doc?91000

RECOMMENDED PACKAGING

LETTER CODE	TYPE OF PACKAGING	HEIGHT (H) (mm)	REEL DIAMETER (mm)	ORDERING CODE EXAMPLE	PITCH 5
G	Ammo	18.5	S [1]	KP1830-310-065-G	X
W	Reel	18.5	350	KP1830-310-065-W	X
-	Bulk	-	-	KP1830-310-065	X

Note

[1] S = box size 55 mm x 210 mm x 340 mm (W x H x L)

EXAMPLE OF ORDERING CODE

TYPE	CAPACITANCE CODE	VOLTAGE CODE	TOLERANCE CODE	PACKAGING CODE
KP1830	210	63	1	G
Tolerance codes: 1 = 1 % (F); 2 = 2 % (G); 3 = 2.5 % (H); 4 = 5 % (J); 5 = 10 % (K)				

Note

- For detailed tape specifications refer to “Packaging Information” www.vishay.com/doc?28139 or end of catalog

MOUNTING

Normal Use

The capacitors are designed for mounting on printed-circuit boards. The capacitors packed in bandoliers are designed for mounting on printed-circuit boards by means of automatic insertion machines.

For detailed tape specifications refer to “Packaging information” www.vishay.com/doc?28139 or end of catalog

Specific Method of Mounting of Withstand Vibration and Shock

In order to withstand vibration and shock tests, it must be ensured that the stand-off pips are in good contact with the printed-circuit board.

- For pitches ≤ 15 mm the capacitors shall be mechanically fixed by the leads
- For larger pitches the capacitors shall be mounted in the same way and the body clamped

Space Requirements on Printed-Circuit Board

The maximum length and width of film capacitors is shown in the drawing:

- Eccentricity as in drawing. The maximum eccentricity is smaller than or equal to the lead diameter of the product concerned
- Product height with seating plane as given by “IEC 60717” as reference: $h_{max.} \leq h + 0.4$ mm or $h_{max.} \leq h' + 0.4$ mm

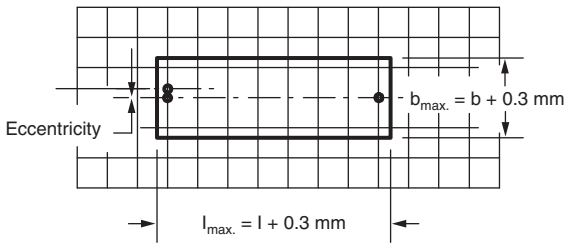

Storage Temperature

T_{stg} = -25 °C to +35 °C with RH maximum 75 % without condensation

Ratings and Characteristics Reference Conditions

Unless otherwise specified, all electrical values apply to an ambient free temperature of 23 °C ± 1 °C, an atmospheric pressure of 86 kPa to 106 kPa and a relative humidity of 50 % ± 2 %.

For reference testing, a conditioning period shall be applied over 96 h ± 4 h by heating the products in a circulating air oven at the rated temperature and a relative humidity not exceeding 20 %.

For technical questions, contact: dc-film@vishay.com
THIS DOCUMENT IS SUBJECT TO CHANGE WITHOUT NOTICE. THE PRODUCTS DESCRIBED HEREIN AND THIS DOCUMENT ARE SUBJECT TO SPECIFIC DISCLAIMERS, SET FORTH AT www.vishay.com/doc?91000

CHARACTERISTICS

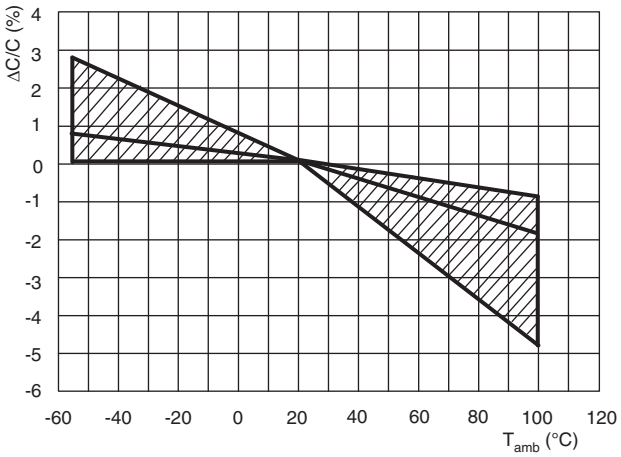

Capacitance as a function of ambient temperature (typical curve)

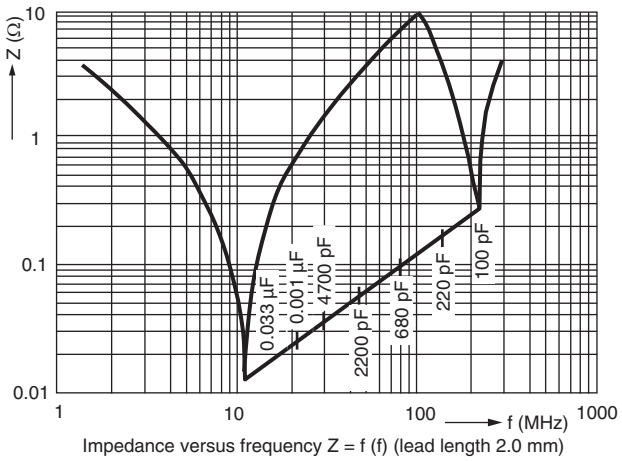

Impedance versus frequency Z = f (f) (lead length 2.0 mm)

Impedance as a function of frequency (typical curve)

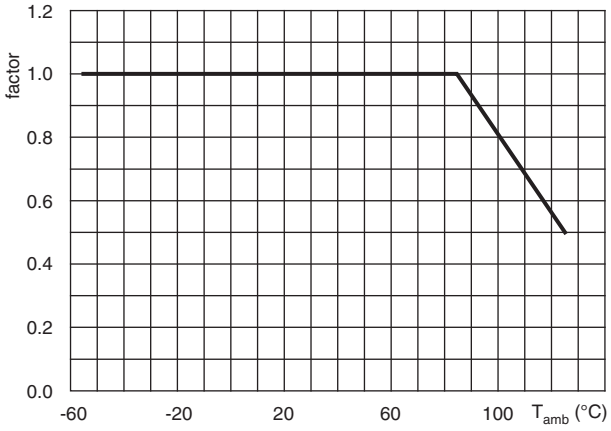

Maximum DC and AC voltage as a function of temperature

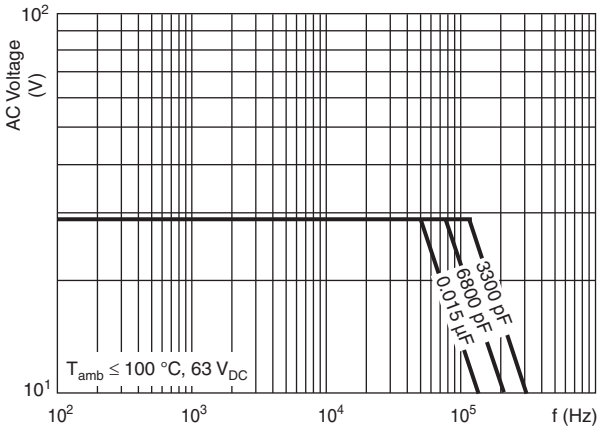

Maximum RMS voltage as a function of frequency

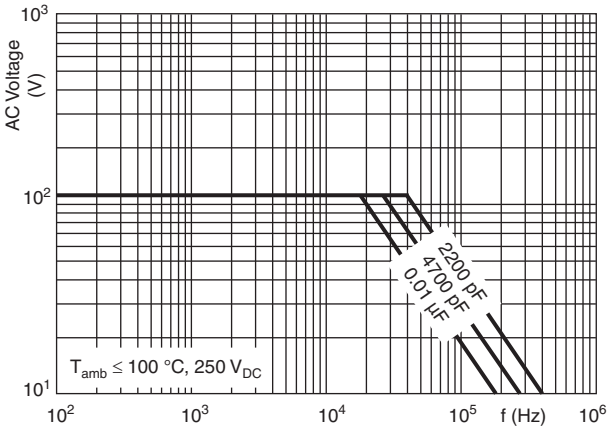

Maximum RMS voltage as a function of frequency

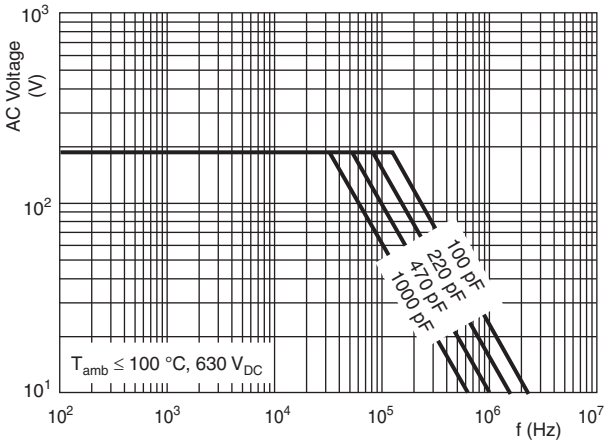

Maximum RMS voltage as a function of frequency

For technical questions, contact: dc-film@vishay.com

THIS DOCUMENT IS SUBJECT TO CHANGE WITHOUT NOTICE. THE PRODUCTS DESCRIBED HEREIN AND THIS DOCUMENT ARE SUBJECT TO SPECIFIC DISCLAIMERS, SET FORTH AT www.vishay.com/doc?91000

HEAT CONDUCTIVITY (G) AS A FUNCTION OF ORIGINAL PITCH AND CAPACITOR BODY THICKNESS IN mW/°C

$W_{max.}$ (mm)	HEAT CONDUCTIVITY (mW/°C)
	PITCH 5 mm
4.5	3
5.5	4
7.5	6
9.0	7

POWER DISSIPATION AND MAXIMUM COMPONENT TEMPERATURE RISE

The power dissipation must be limited in order not to exceed the maximum allowed component temperature rise as a function of the free air ambient temperature.

The power dissipation can be calculated according type detail specification “HQN-384-01/101: Technical Information Film Capacitors” with the typical t_{gd} of the curves.

The component temperature rise (ΔT) can be measured (see section “Measuring the component temperature” for more details) or calculated by $\Delta T = P/G$:

- ΔT = component temperature rise (°C)
- P = power dissipation of the component (mW)
- G = heat conductivity of the component (mW/°C)

MEASURING THE COMPONENT TEMPERATURE

A thermocouple must be attached to the capacitor body as in:

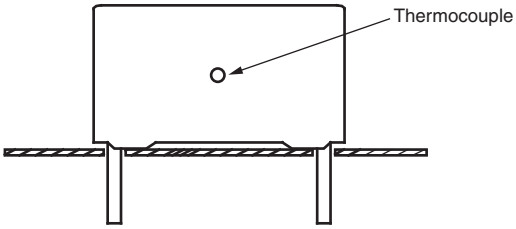

The temperature is measured in unloaded (T_{amb}) and maximum loaded condition (T_C).

The temperature rise is given by $\Delta T = T_C - T_{amb}$.

To avoid radiation or convection, the capacitor should be tested in a wind-free box.

APPLICATION NOTE AND LIMITING CONDITIONS

To select the capacitor for a certain application, the following conditions must be checked:

1. The peak voltage (U_p) shall not be greater than the rated DC voltage (U_{RDC}).
2. The peak-to-peak voltage ($U_{p\text{-}p}$) shall not be greater than the maximum ($U_{p\text{-}p}$) to avoid the ionization inception level.
3. The maximum component surface temperature rise must be lower than the limits.
4. The maximum application temperature must be lower than 105 °C.
5. There is no limit for the voltage pulse slope in the application.

For technical questions, contact: dc-film@vishay.com
THIS DOCUMENT IS SUBJECT TO CHANGE WITHOUT NOTICE. THE PRODUCTS DESCRIBED HEREIN AND THIS DOCUMENT ARE SUBJECT TO SPECIFIC DISCLAIMERS, SET FORTH AT www.vishay.com/doc?91000

INSPECTION REQUIREMENTS

General Notes

Sub-clause numbers of tests and performance requirements refer to the “Sectional Specification, Publication IEC 60384-13 and Specific Reference Data”.

Group C Inspection Requirements

SUB-CLAUSE NUMBER AND TEST	CONDITIONS	PERFORMANCE REQUIREMENTS
SUB-GROUP C1A PART OF SAMPLE OF SUB-GROUP C1		
4.1 Dimensions (detail)		As specified in chapters “General Data” of this specification
4.3.1 Initial measurements	Capacitance at 1 kHz Tangent of loss angle at 100 kHz	
4.3 Robustness of terminations	Tensile: load 10 N; 10 s Bending: load 5 N; 4 x 90°	No visible damage
4.4 Resistance to soldering heat	No predrying Method: 1A Solder bath: 280 °C ± 5 °C Duration: 5 s	
4.14 Component solvent resistance	Isopropylalcohol at room temperature Method: 2 Immersion time: 5.0 min ± 0.5 min Recovery time: min. 1 h, max. 2 h	
4.4.2 Final measurements	Visual examination	No visible damage Legible marking
	Capacitance	$\lvert\Delta C/C\rvert \leq 2$ % of the value measured in 4.3.1
SUB-GROUP C1B PART OF SAMPLE OF SUB-GROUP C1		
4.6.1 Initial measurements	Capacitance at 1 kHz Tangent of loss angle at 100 kHz	
4.14 Solvent resistance of the marking	Isopropylalcohol at room temperature Method: 1 Rubbing material: cotton wool Immersion time: 5.0 min ± 0.5 min	No visible damage Legible marking
4.6 Rapid change of temperature	θA = -55 °C θB = +105 °C 5 cycles Duration t = 30 min	
4.7 Vibration	Visual examination Mounting: See section “Mounting” of this specification Procedure B4 Frequency range: 10 Hz to 55 Hz Amplitude: 0.75 mm or Acceleration 98 m/s^2 (whichever is less severe) Total duration 6 h	No visible damage
4.7.2 Final inspection	Visual examination	No visible damage
	Capacitance	$\lvert\Delta C/C\rvert \leq 2$ % of the value measured in 4.6.1
	Tangent of loss angle	As specified in section “Tangent of loss angle” of this specification

For technical questions, contact: dc-film@vishay.com
THIS DOCUMENT IS SUBJECT TO CHANGE WITHOUT NOTICE. THE PRODUCTS DESCRIBED HEREIN AND THIS DOCUMENT ARE SUBJECT TO SPECIFIC DISCLAIMERS, SET FORTH AT www.vishay.com/doc?91000

SUB-CLAUSE NUMBER AND TEST	CONDITIONS	PERFORMANCE REQUIREMENTS
4.9 Shock	Mounting: See section “Mounting” of this specification Pulse shape: half sine Acceleration: 490 m/s² Duration of pulse: 11 ms	
4.9.3 Final measurements	Visual examination	No visible damage
	Capacitance	$\|\Delta C/C\| \leq 2$ % of the value measured in 4.6.1.
SUB-GROUP C1 COMBINED SAMPLE OF SPECIMENS OF SUB-GROUPS C1A AND C1B		
4.10 Climatic sequence		
4.10.2 Dry heat	Temperature: +100 °C Duration: 16 h	
4.10.3 Damp heat cyclic Test Db, first cycle		
4.10.4 Cold	Temperature: -55 °C Duration: 2 h	
4.10.6 Damp heat cyclic Test Db, remaining cycles	Recovery 1 h to 2 h	
4.10.6.2 Final measurements	Voltage proof = U_{RDC} for 1 min within 15 min after removal from testchamber	No breakdown or flash-over
	Visual examination	No visible damage Legible marking
	Capacitance	$\|\Delta C/C\| \leq 2$ % of the value measured in 4.10.2
	Tangent of loss angle	As specified in section “Tangent of loss angle” of this specification or ≤ 1.4 times the value measured in 4.3.1 whichever is greater
	Insulation resistance	≥ 50 % of values specified in section “Insulation resistance” of this specification
SUB-GROUP C2		
4.11 Damp heat steady state		
4.11.1 Initial measurements	Capacitance at 1 kHz Tangent of loss angle at 1 kHz	
	Voltage proof = U_{RDC} for 1 min within 15 min after removal from testchamber	No breakdown or flash-over
4.11.3 Final measurements	Visual examination	No visible damage Legible marking
	Capacitance	$\|\Delta C/C\| \leq 1$ % of the value measured in 4.11.1.
	Tangent of loss angle	As specified in section “Tangent of loss angle” of this specification or ≤ 1.4 times the value measured in 4.11.1 whichever is greater
	Insulation resistance	≥ 50 % of values specified in section “Insulation resistance” of this specification

For technical questions, contact: dc-film@vishay.com
THIS DOCUMENT IS SUBJECT TO CHANGE WITHOUT NOTICE. THE PRODUCTS DESCRIBED HEREIN AND THIS DOCUMENT ARE SUBJECT TO SPECIFIC DISCLAIMERS, SET FORTH AT www.vishay.com/doc?91000

SUB-CLAUSE NUMBER AND TEST	CONDITIONS	PERFORMANCE REQUIREMENTS
SUB GROUP C3		
4.12 Endurance	Duration: 2000 h 1.5 x U_{RDC} at 85 °C 1.05 x U_{RDC} at 100 °C	
4.12.1 Initial measurements	Capacitance at 1 kHz Tangent of loss angle at 100 kHz	
4.12.5 Final measurements	Visual examination	No visible damage Legible marking
	Capacitance	$\|\Delta C/C\| \leq 2$ % of the value measured in 4.12.1
	Tangent of loss angle	As specified in section “Tangent of loss angle” of this specification or ≤ 1.4 times the value measured in 4.12.1 whichever is greater
	Insulation resistance	As specified in section “Insulation resistance” of this specification

For technical questions, contact: dc-film@vishay.com
THIS DOCUMENT IS SUBJECT TO CHANGE WITHOUT NOTICE. THE PRODUCTS DESCRIBED HEREIN AND THIS DOCUMENT ARE SUBJECT TO SPECIFIC DISCLAIMERS, SET FORTH AT www.vishay.com/doc?91000

Disclaimer

ALL PRODUCT, PRODUCT SPECIFICATIONS AND DATA ARE SUBJECT TO CHANGE WITHOUT NOTICE TO IMPROVE RELIABILITY, FUNCTION OR DESIGN OR OTHERWISE.

Vishay Intertechnology, Inc., its affiliates, agents, and employees, and all persons acting on its or their behalf (collectively, “Vishay”), disclaim any and all liability for any errors, inaccuracies or incompleteness contained in any datasheet or in any other disclosure relating to any product.

Vishay makes no warranty, representation or guarantee regarding the suitability of the products for any particular purpose or the continuing production of any product. To the maximum extent permitted by applicable law, Vishay disclaims (i) any and all liability arising out of the application or use of any product, (ii) any and all liability, including without limitation special, consequential or incidental damages, and (iii) any and all implied warranties, including warranties of fitness for particular purpose, non-infringement and merchantability.

Statements regarding the suitability of products for certain types of applications are based on Vishay's knowledge of typical requirements that are often placed on Vishay products in generic applications. Such statements are not binding statements about the suitability of products for a particular application. It is the customer's responsibility to validate that a particular product with the properties described in the product specification is suitable for use in a particular application. Parameters provided in datasheets and / or specifications may vary in different applications and performance may vary over time. All operating parameters, including typical parameters, must be validated for each customer application by the customer's technical experts. Product specifications do not expand or otherwise modify Vishay's terms and conditions of purchase, including but not limited to the warranty expressed therein.

Hyperlinks included in this datasheet may direct users to third-party websites. These links are provided as a convenience and for informational purposes only. Inclusion of these hyperlinks does not constitute an endorsement or an approval by Vishay of any of the products, services or opinions of the corporation, organization or individual associated with the third-party website. Vishay disclaims any and all liability and bears no responsibility for the accuracy, legality or content of the third-party website or for that of subsequent links.

Vishay products are not designed for use in life-saving or life-sustaining applications or any application in which the failure of the Vishay product could result in personal injury or death unless specifically qualified in writing by Vishay. Customers using or selling Vishay products not expressly indicated for use in such applications do so at their own risk. Please contact authorized Vishay personnel to obtain written terms and conditions regarding products designed for such applications.

No license, express or implied, by estoppel or otherwise, to any intellectual property rights is granted by this document or by any conduct of Vishay. Product names and markings noted herein may be trademarks of their respective owners.

© 2025 VISHAY INTERTECHNOLOGY, INC. ALL RIGHTS RESERVED

THIS DOCUMENT IS SUBJECT TO CHANGE WITHOUT NOTICE. THE PRODUCTS DESCRIBED HEREIN AND THIS DOCUMENT ARE SUBJECT TO SPECIFIC DISCLAIMERS, SET FORTH AT www.vishay.com/doc?91000