Low Building Height Metallized Polypropylene DC-Link Film Capacitor - Industrial Grade



FEATURES

- Slim line, low building height
- Very long useful life time: Up to 100 000 h at U_{NDC} and 70 °C
- High ripple current capability, low ESR, low ESL
- Temperature range: 105 °C
- Mounting: radial
- Material categorization: for definitions of compliance please see www.vishay.com/doc?99912

Pb-free
RoHS COMPLIANT
HALOGEN FREE
GREEN (5-2008)

APPLICATIONS

- PV micro inverters
- LED street lighting
- On board chargers (EV/HEV), battery chargers

QUICK REFERENCE DATA	
Rated capacitance range	2 µF to 100 µF
Capacitance tolerance	5 %
Rated voltage range, U_{NDC}	500 V to 1000 V
Climatic testing class	40/105/56
Rated temperature	85 °C
Maximum permissible case temperature	105 °C, observing voltage derating
Maximum applicable peak to peak ripple voltage	0.2 x U_{NDC}
Reference standards	IEC 61071, IEC 60068
Dielectric	Polypropylene film
Electrodes	Metallized dielectric capacitor
Construction	Mono construction
Encapsulation	Plastic case sealed with resin; flame retardant
Terminals	Tinned wire
Self inductance (L_S)	< 1 nH per mm of lead spacing
Withstanding DC voltage between terminals (1)	1.5 U_{NDC} for 10 s, cut off current 10 mA, rise time ≤ 1000 V/s
Insulation resistance	RC between leads, after 1 min > 10 000 s For U_{NDC} ≤ 500 V measuring voltage 100 V For U_{NDC} > 500 V measuring voltage 500 V
Life time expectancy	Useful life time: > 100 000 h at U_{NDC} and 70 °C FIT: < 10 x 10^{-9}/h (10 per 10^9 component h) at 0.5 x U_{NDC}, 40 °C
Marking	C-value; tolerance; rated voltage; code for dielectric material; code for manufacturing origin; manufacturer's type designation; manufacturer's logo; year and week of manufacture

Notes

- For more detailed data and test requirements, contact dc-film@vishay.com
- For general information like characteristics and definitions used for film capacitors follow the link: www.vishay.com/doc?28147

(1) See document "Voltage Proof Test for Metalized Capacitors" (www.vishay.com/doc?28169)

DC VOLTAGE RATINGS			
U_{NDC} at 85 °C	500 V	700 V	1000 V
U_{OPDC} at 70 °C	600 V	800 V	1200 V
U_{OPDC} at 105 °C	350 V	500 V	750 V

For technical questions, contact: dc-film@vishay.com

THIS DOCUMENT IS SUBJECT TO CHANGE WITHOUT NOTICE. THE PRODUCTS DESCRIBED HEREIN AND THIS DOCUMENT ARE SUBJECT TO SPECIFIC DISCLAIMERS, SET FORTH AT www.vishay.com/doc?91000

COMPOSITION OF CATALOG NUMBER

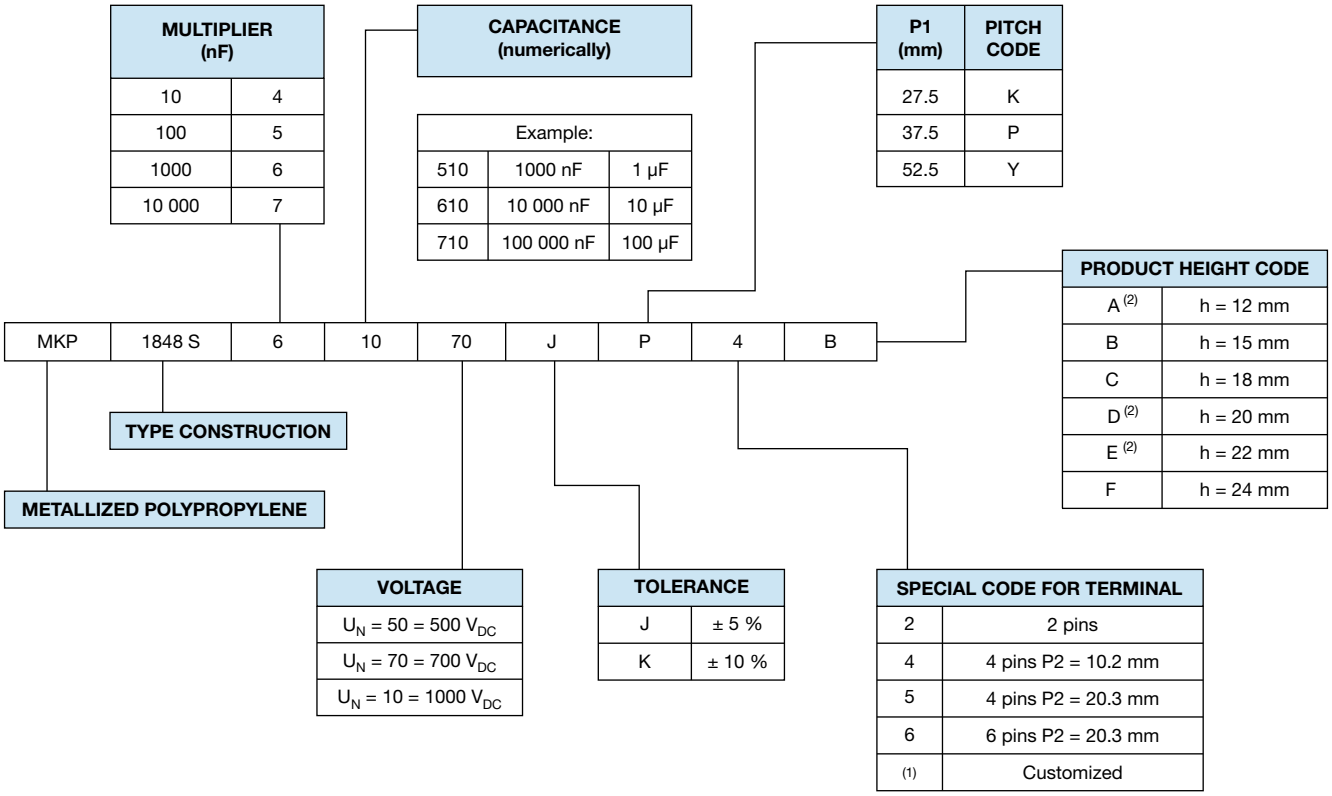

Notes

(1) Tabs terminals or customized terminals are available on request

(2) Product height on request

For technical questions, contact: dc-film@vishay.com

THIS DOCUMENT IS SUBJECT TO CHANGE WITHOUT NOTICE. THE PRODUCTS DESCRIBED HEREIN AND THIS DOCUMENT ARE SUBJECT TO SPECIFIC DISCLAIMERS, SET FORTH AT www.vishay.com/doc?91000

DIMENSIONS in millimeters

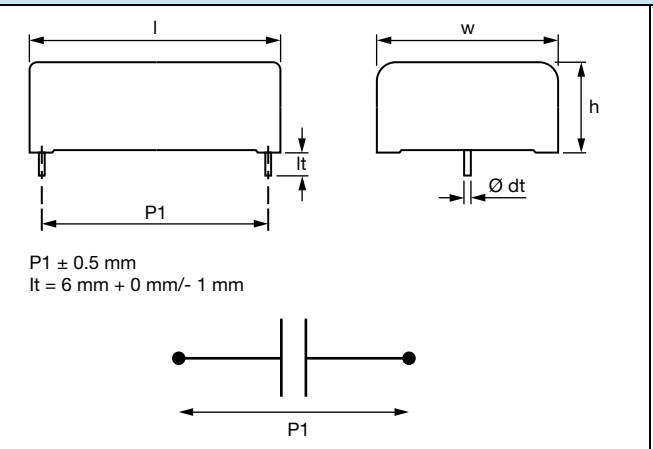



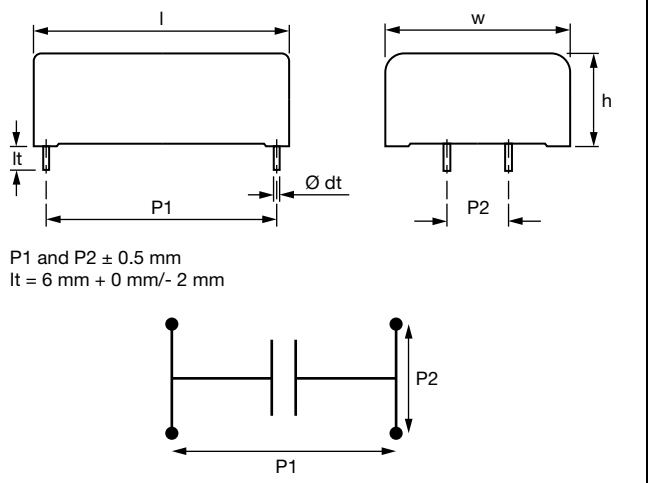



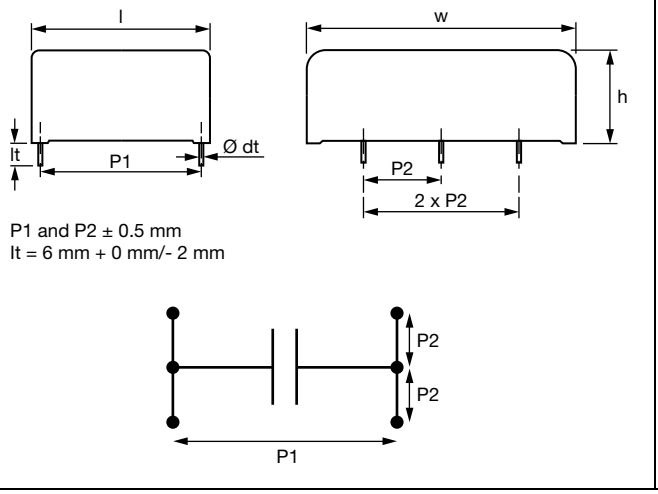

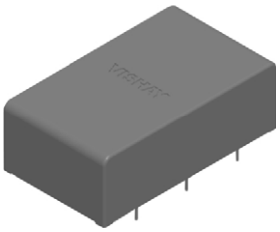

Notes

- Standard dimension
- Ø dt ± 10 % of standard diameter specified

For technical questions, contact: dc-film@vishay.com

THIS DOCUMENT IS SUBJECT TO CHANGE WITHOUT NOTICE. THE PRODUCTS DESCRIBED HEREIN AND THIS DOCUMENT ARE SUBJECT TO SPECIFIC DISCLAIMERS, SET FORTH AT www.vishay.com/doc?91000

ELECTRICAL DATA AND ORDERING CODE

U_{NDC} (V)	HEIGHT (mm)	CAP. [7] (µF)	DIMENSION [5] (mm)			P1 (mm)	P2 (mm)	dV/dt (V/µs)	I_{PEAK} (A)	I_{RMS} [2] (A)		ESR [3] (mΩ)		tan δ 10 kHz (< 10^{-4}) [4]		ORDERING CODE [1]
			w	h	l					2 PINS	4 PINS	2 PINS	4 PINS	2 PINS	4 PINS	
500	12	5	24.0	12.0	31.5	27.5	-	30	150	4	-	13	-	60	-	MKP1848S55050JK2A
	15	7	27.0	15.0	31.5	27.5	-	30	210	5	-	10	-	60	-	MKP1848S57050JK2B
		10	27.0	15.0	42.0	37.5	10.2	15	150	5	5	10	7.5	125	110	MKP1848S61050JP*B
		15	33.0	15.0	42.0	37.5	10.2	15	225	6.5	7	7	5	125	110	MKP1848S61550JP*B
		20	33.0	15.0	57.5	52.5	20.3	7	140	6	6.5	9.5	8	250	220	MKP1848S62050JY*B
		30	45.0	15.0	57.5	52.5	20.3	7	210	8.5	9	6.5	5.5	250	220	MKP1848S63050JY*B
		50 [6]	62.0	15.0	57.5	52.5	20.3	7	350	-	13.5	-	3.5	-	220	MKP1848S65050JY6B
	18	10	24.0	18.0	42.0	37.5	10.2	15	150	5	5.5	10	7.5	125	110	MKP1848S61050JP*C
		15	27.0	18.0	42.0	37.5	10.2	15	225	6.5	7	6.5	5	125	110	MKP1848S61550JP*C
		20	39.0	18.0	42.0	37.5	10.2	15	300	8.5	9	5	4	125	110	MKP1848S62050JP*C
		30	35.0	18.0	57.5	52.5	20.3	7	210	8	8.5	6.5	5.5	250	220	MKP1848S63050JY*C
		50	50.0	18.0	57.5	52.5	20.3	7	350	-	12.5	-	3.5	250	220	MKP1848S65050JY5C
	24	20	30.0	24.0	42.0	37.5	10.2	15	300	8.5	9	5	4	125	110	MKP1848S62050JP*F
		30	39.0	24.0	42.0	37.5	10.2	15	450	11	12	3.5	2.5	125	110	MKP1848S63050JP*F
		50	39.0	24.0	57.5	52.5	20.3	7	350	11.5	12.5	4	3.5	250	220	MKP1848S65050JY*F
		100 [6]	70.0	24.0	57.5	52.5	20.3	7	700	-	22	-	2	-	220	MKP1848S71050JY6F
700	12	3	24.0	12.0	31.5	27.5	-	35	105	3.5	-	14	-	45	-	MKP1848S53070JK2A
	15	5	27.0	15.0	31.5	27.5	-	35	175	5	-	8	-	45	-	MKP1848S55070JK2B
		7	27.0	15.0	42.0	37.5	10.2	17	119	5	5	15	11.5	110	95	MKP1848S57070JP*B
		10	33.0	15.0	42.0	37.5	10.2	17	170	6	6.5	11	8	110	95	MKP1848S61070JP*B
		15	33.0	15.0	57.5	52.5	20.3	8	120	6	6.5	12	10	220	200	MKP1848S61570JY*B
		20	45.0	15.0	57.5	52.5	20.3	8	160	8	8.5	9	7.5	220	200	MKP1848S62070JY*B
		30 [6]	62.0	15.0	57.5	52.5	20.3	8	240	-	12	-	5	-	200	MKP1848S63070JY6B
	18	7	24.0	18.0	42.0	37.5	10.2	17	119	5	5	15	11.5	110	95	MKP1848S57070JP*C
		10	27.0	18.0	42.0	37.5	10.2	17	170	6	6.5	11	8	110	95	MKP1848S61070JP*C
		15	39.0	18.0	42.0	37.5	10.2	17	255	8.5	9	7	5.5	110	95	MKP1848S61570JP*C
		20	35.0	18.0	57.5	52.5	20.3	8	160	7.5	8	9	7.5	220	200	MKP1848S62070JY*C
		30	50.0	18.0	57.5	52.5	20.3	8	240	-	11.5	-	5	-	200	MKP1848S63070JY5C
	24	15	30.0	24.0	42.0	37.5	10.2	17	255	8.5	9	7	5.5	110	95	MKP1848S61570JP*F
		20	39.0	24.0	42.0	37.5	10.2	17	340	10.5	11.5	6	4	110	95	MKP1848S62070JP*F
		30	39.0	24.0	57.5	52.5	20.3	8	240	10.5	11	6	5	220	200	MKP1848S63070JY*F
		50 [6]	70.0	24.0	57.5	52.5	20.3	8	400	-	18	-	3	-	200	MKP1848S65070JY6F

For technical questions, contact: dc-film@vishay.com
THIS DOCUMENT IS SUBJECT TO CHANGE WITHOUT NOTICE. THE PRODUCTS DESCRIBED HEREIN AND THIS DOCUMENT ARE SUBJECT TO SPECIFIC DISCLAIMERS, SET FORTH AT www.vishay.com/doc?91000

ELECTRICAL DATA AND ORDERING CODE

U_{NDC} (V)	HEIGHT (mm)	CAP. (7) (µF)	DIMENSION (5) (mm)			P1 (mm)	P2 (mm)	dV/dt (V/µs)	I_{PEAK} (A)	I_{RMS} (2) (A)		ESR (3) (mΩ)		tan δ 10 kHz (< 10^{-4}) (4)		ORDERING CODE (1)
			w	h	l					2 PINS	4 PINS	2 PINS	4 PINS	2 PINS	4 PINS	
1000	12	2	24.0	12.0	31.5	27.5	-	50	100	3	-	16	-	40	-	MKP1848S52010JK2A
	15	5	27.0	15.0	42.0	37.5	10.2	25	125	4.5	4.5	16	11.5	105	90	MKP1848S55010JP*B
		7	33.0	15.0	42.0	37.5	10.2	25	175	5.5	6	12	8	105	90	MKP1848S57010JP*B
		10	33.0	15.0	57.5	52.5	20.3	12	120	5.5	6	13	10	160	140	MKP1848S61010JY*B
		15	45.0	15.0	57.5	52.5	20.3	12	180	7.5	8	9	6.5	160	140	MKP1848S61510JY*B
		20 (6)	62.0	15.0	57.5	52.5	20.3	12	240	-	11	-	5	-	140	MKP1848S62010JY6B
	18	3	24.0	18.0	42.0	37.5	10.2	25	75	3.5	3.5	27	19	105	90	MKP1848S53010JP*C
		5	27.0	18.0	42.0	37.5	10.2	25	125	4.5	5	16	11.5	105	90	MKP1848S55010JP*C
		7	39.0	18.0	42.0	37.5	10.2	25	175	6.5	7	12	8	105	90	MKP1848S57010JP*C
		10	39.0	18.0	42.0	37.5	10.2	25	250	7.5	8	8	6	105	90	MKP1848S61010JP*C
		15	50.0	18.0	57.5	52.5	20.3	12	180	-	9	-	6.5	-	140	MKP1848S61510JY5C
		20	50.0	18.0	57.5	52.5	20.3	12	240	-	10	-	5	-	140	MKP1848S62010JY5C
	24	7	30.0	24.0	42.0	37.5	10.2	25	175	6.5	6.5	12	8	105	90	MKP1848S57010JP*F
		10	39.0	24.0	42.0	37.5	10.2	25	250	8.5	9	8	6	105	90	MKP1848S61010JP*F
		15	39.0	24.0	57.5	52.5	20.3	12	180	8	8.5	9	6.5	160	140	MKP1848S61510JY*F
		20	39.0	24.0	57.5	52.5	20.3	12	240	9.5	10	7	5	160	140	MKP1848S62010JY*F
		30 (6)	70.0	24.0	57.5	52.5	20.3	12	360	-	15.5	-	4	-	140	MKP1848S63010JY6F

Notes

(1) Change the * symbol with special code for the terminals
(2) Maximum RMS current at 10 kHz, + 85 °C, Δt = + 15 °C, capacitance tolerlance ≤ ± 5 %
(3) Equivalent series resistance typical values at 10 kHz
(4) Maximum tan δ values
(5) Standard dimension
(6) 6 pins
(7) Intermediate capacitance values available on request

PACKAGING INFORMATION

U_{NDC} (V)	HEIGHT (mm)	CAP. (1) (µF)	Ø dt	ORDERING CODE (1)	MASS (g)	SPQ (3) (pcs)
500	12	5	0.8	MKP1848S55050JK2A	7	99
	15	7	0.8	MKP1848S57050JK2B	10.5	90
		10	1.0	MKP1848S61050JP*B	14	70
		15	1.0	MKP1848S61550JP*B	18.5	56
		20	1.2	MKP1848S62050JY*B	22.5	40
		30	1.2	MKP1848S63050JY*B	31.5	30
		50 (2)	1.2	MKP1848S65050JY6B	43	20
	18	10	1.0	MKP1848S61050JP*C	15	77
		15	1.0	MKP1848S61550JP*C	15.5	70
		20	1.0	MKP1848S62050JP*C	25	49
		30	1.2	MKP1848S63050JY*C	30.5	40
		50	1.2	MKP1848S65050JY5C	41.5	25
	24	20	1.0	MKP1848S62050JP*F	25	63
		30	1.0	MKP1848S63050JP*F	32	49
		50	1.2	MKP1848S65050JY*F	41.5	40
		100 (2)	1.2	MKP1848S71050JY6F	78	20

For technical questions, contact: dc-film@vishay.com
THIS DOCUMENT IS SUBJECT TO CHANGE WITHOUT NOTICE. THE PRODUCTS DESCRIBED HEREIN AND THIS DOCUMENT ARE SUBJECT TO SPECIFIC DISCLAIMERS, SET FORTH AT www.vishay.com/doc?91000

PACKAGING INFORMATION

U_{NDC} (V)	HEIGHT (mm)	CAP. [1] (µF)	Ø dt	ORDERING CODE [1]	MASS (g)	SPQ [3] (pcs)
700	12	3	0.8	MKP1848S53070JK2A	6.5	99
	15	5	0.8	MKP1848S55070JK2B	9	90
		7	1.0	MKP1848S57070JP*B	12.5	70
		10	1.0	MKP1848S61070JP*B	16	56
		15	1.2	MKP1848S61570JY*B	21.5	40
		20	1.2	MKP1848S62070JY*B	32.5	30
		30 [2]	1.2	MKP1848S63070JY6B	43	20
	18	7	1.0	MKP1848S57070JP*C	13	77
		10	1.0	MKP1848S61070JP*C	15.5	70
		15	1.0	MKP1848S61570JP*C	22	49
		20	1.2	MKP1848S62070JY*C	29.5	40
		30	1.2	MKP1848S62570JY5C	41.5	25
	24	15	1.0	MKP1848S61570JP*F	21	63
		20	1.0	MKP1848S62070JP*F	28.5	49
		30	1.2	MKP1848S63070JY*F	39.5	40
		50 [2]	1.2	MKP1848S65070JY6F	83	20
1000	12	2	0.8	MKP1848S52010JK2A	11	99
	15	5	1.0	MKP1848S55010JP*B	13	70
		7	1.0	MKP1848S57010JP*B	16.5	56
		10	1.2	MKP1848S61010JY*B	21.5	40
		15	1.2	MKP1848S61510JY*B	30	30
		20 [2]	1.2	MKP1848S62010JY6B	45	20
	18	3	1.0	MKP1848S53010JP*C	16.5	77
		5	1.0	MKP1848S55010JP*C	16	70
		7	1.0	MKP1848S57010JP*C	25.5	49
		10	1.0	MKP1848S61010JP*C	21.5	49
		15	1.2	MKP1848S61510JY5C	43.5	25
		20	1.2	MKP1848S62010JY5C	43.5	25
	24	7	1.0	MKP1848S57010JP*F	25	63
		10	1.0	MKP1848S61010JP*F	33	49
		15	1.2	MKP1848S61510JY*F	45.5	40
		20	1.2	MKP1848S62010JY*F	39	40
		30 [2]	1.2	MKP1848S63010JY6F	87	20

Notes

[1] Intermediate capacitance values available on request

[2] 6 pins

[3] SPQ = Standard Packing Quantity

For technical questions, contact: dc-film@vishay.com

THIS DOCUMENT IS SUBJECT TO CHANGE WITHOUT NOTICE. THE PRODUCTS DESCRIBED HEREIN AND THIS DOCUMENT ARE SUBJECT TO SPECIFIC DISCLAIMERS, SET FORTH AT www.vishay.com/doc?91000

CONSTRUCTION DESCRIPTION

Low inductive wound cell elements of metallized polypropylene film, potted with resin in a flame retardant case.

SPECIFIC METHOD OF MOUNTING TO WITHSTAND VIBRATION AND SHOCK

The capacitor unit is designed for mounting on a printed circuit board. In order to withstand vibration and shock tests, it must be insured that the stand-off pips are in good contact with the printed circuit board. The capacitors shall be mechanically fixed by the leads and the body clamped.

SPACE REQUIREMENTS ON PRINTED-CIRCUIT BOARD FOR 2 PINS PRODUCTS

For the maximum product dimensions and maximum space requirements for length ($l_{max.}$), width ($w_{max.}$) and height ($h_{max.}$) following tolerances must be taken in account in the envelopment of the components as shown in the drawings below.

- For products with pitch = 27.5 mm, $\Delta w = \Delta l = 0.5$ mm, and $\Delta h = 0.5$ mm
- For products with pitch = 37.5 mm, $\Delta w = \Delta l = 0.7$ mm and, $\Delta h = 0.5$ mm
- For products with pitch = 52.5 mm, $\Delta w = \Delta l = 1.0$ mm and, $\Delta h = 0.5$ mm

Eccentricity defined as in drawing. The maximum eccentricity is smaller than or equal to the lead diameter of the product concerned.

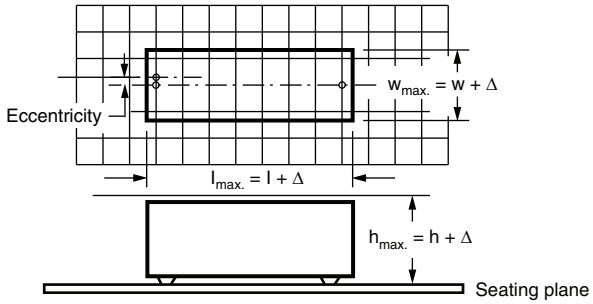

For the minimum product dimensions for length (lmin), width (wmin) and height (hmin) following tolerances of the components are valid:

$$l_{min.} = l - \Delta l,\ w_{min.} = w - \Delta w \text{ and } h_{min.} = h - \Delta h$$

- For products with pitch = 27.5 mm, Δl= 1.0 mm and $\Delta w = \Delta h = 0.5$ mm
- For products with pitch = 37.5 mm, Δl= 1.0 mm and $\Delta w = \Delta h = 1.0$ mm
- For products with pitch = 52.5 mm, Δl= 1.5 mm and $\Delta w = \Delta h = 1.0$ mm

SPACE REQUIREMENTS ON PRINTED-CIRCUIT BOARD FOR MULTIPLE PINS PRODUCTS

The product height with seating plane as given by “IEC 60717” as reference: $h_{max.} = h$. The maximum length and width of film capacitors is shown in the figure.

DIMENSIONS in millimeters

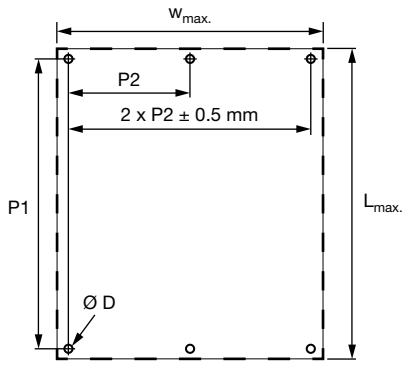

P1	$L_{max.}$	$W_{max.}$	Ø D	H
37.5	l + 1.5	w + 1.8	1.5	h + 0.5
52.5	l + 1.8	w + 2.0	1.7	h + 0.5

For technical questions, contact: dc-film@vishay.com

THIS DOCUMENT IS SUBJECT TO CHANGE WITHOUT NOTICE. THE PRODUCTS DESCRIBED HEREIN AND THIS DOCUMENT ARE SUBJECT TO SPECIFIC DISCLAIMERS, SET FORTH AT www.vishay.com/doc?91000

SOLDERING CONDITIONS

For general soldering conditions and wave soldering profile we refer to the document “Soldering Conditions Vishay Film Capacitors”: www.vishay.com/doc?28171

STORAGE TEMPERATURE

Storage temperature: T_{stg} = -25 °C to +35 °C with RH maximum 75 % without condensation

RATINGS AND CHARACTERISTICS REFERENCE CONDITIONS

Unless otherwise specified, all electrical values apply to an ambient temperature of 23 °C ± 1 °C, an atmospheric pressure of 86 kPa to 106 kPa and a relative humidity of 50 % ± 2 %.

For reference testing, a conditioning period shall be applied over 96 h ± 4 h by heating the products in a circulating air oven at the rated temperature and a relative humidity not exceeding 20 %.

For technical questions, contact: dc-film@vishay.com
THIS DOCUMENT IS SUBJECT TO CHANGE WITHOUT NOTICE. THE PRODUCTS DESCRIBED HEREIN AND THIS DOCUMENT ARE SUBJECT TO SPECIFIC DISCLAIMERS, SET FORTH AT www.vishay.com/doc?91000

CHARACTERISTICS

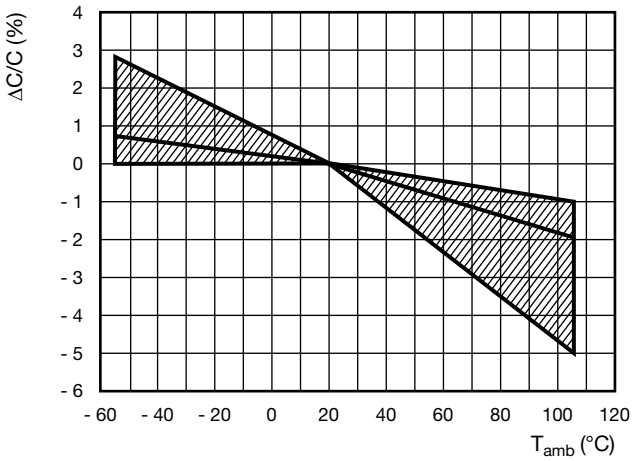

Capacitance as a function of ambient temperature (typical)

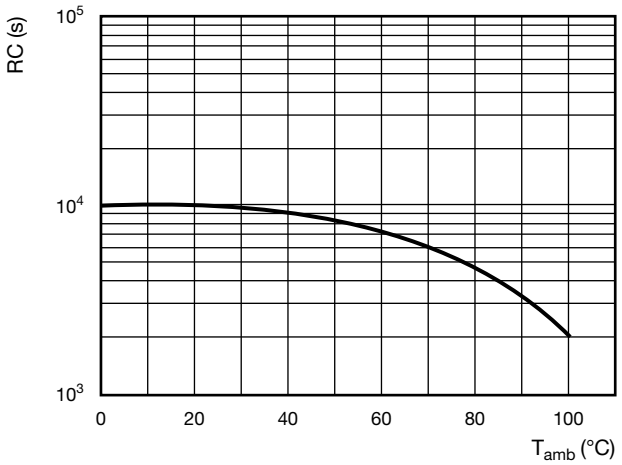

Insulation resistance as a function of ambient temperature (typical)

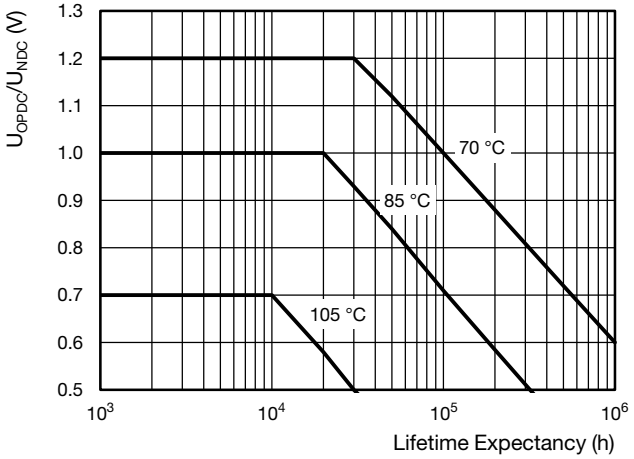

Lifetime expectancy (typical)

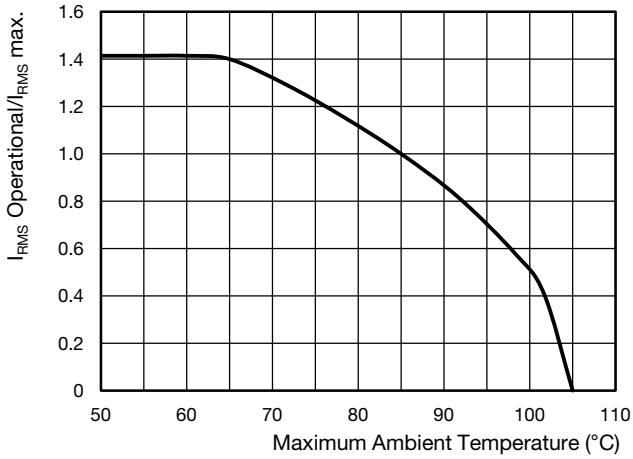

Maximum I_{RMS} current in function of ambient temperature

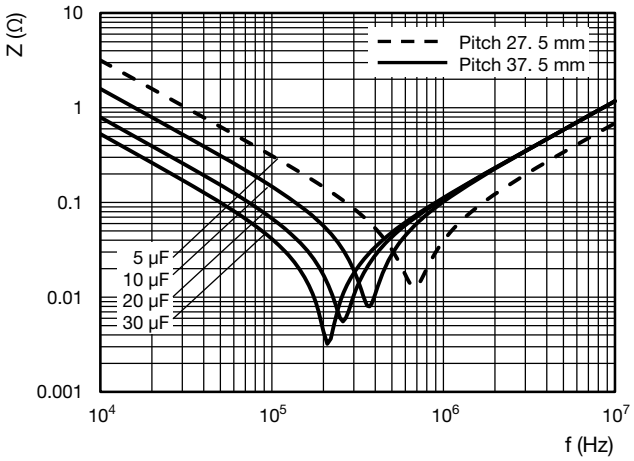

Impedance vs. Frequency (typical)

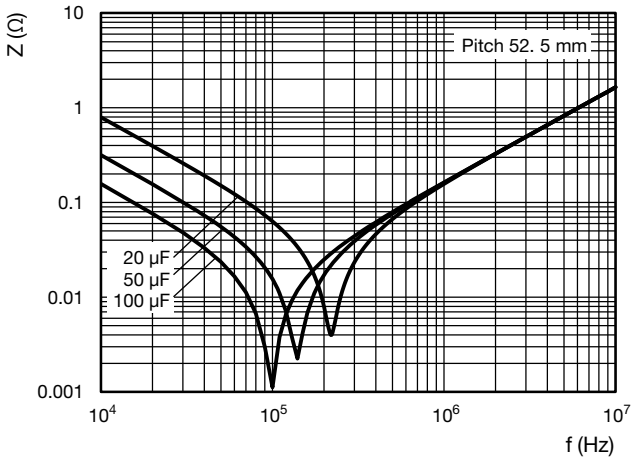

Impedance vs. Frequency (typical)

For technical questions, contact: dc-film@vishay.com
THIS DOCUMENT IS SUBJECT TO CHANGE WITHOUT NOTICE. THE PRODUCTS DESCRIBED HEREIN AND THIS DOCUMENT ARE SUBJECT TO SPECIFIC DISCLAIMERS, SET FORTH AT www.vishay.com/doc?91000

HEAT CONDUCTIVITY			
DIMENSION (mm)			HEAT CONDUCTIVITY (mW/°C)
w	h	l	
24	12	31.5	21.5
27	15	31.5	26
27	15	42	33
33	15	42	38
24	18	42	33.5
27	18	42	36
39	18	42	47
30	24	42	45.5
39	24	42	54.5
33	15	57.5	48.5
45	15	57.5	61.5
62	15	57.5	80
35	18	57.5	55
50	18	57.5	72
39	24	57.5	68
70	24	57.5	106

POWER DISSIPATION AND MAXIMUM COMPONENT TEMPERATURE RISE

The power dissipation must be limited in order not to exceed the maximum allowed component temperature rise as a function of the free air ambient temperature.

The component temperature rise (ΔT) can be measured or calculated by $\Delta T = P/G$:

- $\Delta T = T_{case} - T_{ambient}$ = Case temperature rise (°C) with a maximum of 15 °C at rated temperature.
- $P = I_{RMS}^2 \times ESR$ = Power dissipation of the component (mW)
- G = Heat conductivity of the component (mW/°C)

MEASURING THE COMPONENT TEMPERATURE

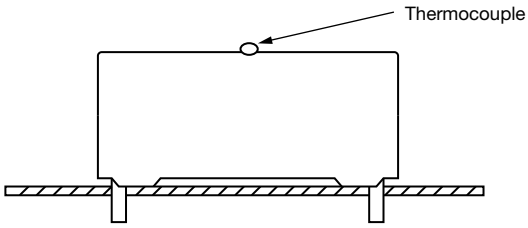

The case temperature is measured in unloaded condition (T_{amb}) and loaded condition (T_C).

To avoid external thermal radiation or convection, the capacitor must be tested in a closed area, free from air circulation.

For technical questions, contact: dc-film@vishay.com
THIS DOCUMENT IS SUBJECT TO CHANGE WITHOUT NOTICE. THE PRODUCTS DESCRIBED HEREIN AND THIS DOCUMENT ARE SUBJECT TO SPECIFIC DISCLAIMERS, SET FORTH AT www.vishay.com/doc?91000

APPLICATION NOTES AND LIMITING CONDITIONS

These capacitors are not suitable for mains applications as across-the-line capacitors without additional protection. These mains applications are strictly regulated in safety standards and therefore electromagnetic interference suppression capacitors conforming the standards must be used.

To select the capacitor for a certain application, the following conditions must be checked:

1. The continuous peak voltage (U_{p+}) shall not exceed the DC voltage rating (U_{NDC})
2. The peak-to-peak ripple voltage (U_{pp}) shall not be greater than 0.2 x U_{NDC}

Non reversing recurrent waveform

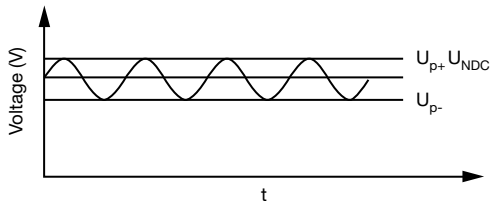

3. For capacitors connected in parallel, normally the proof voltage and possibly the rated voltage must be reduced. For information depending of the capacitance value and the number of parallel connections contact dc-film@vishay.com.
4. The voltage peak slope (dU/dt) shall not exceed the pulse slope at the DC voltage rating. If the pulse voltage is lower than the rated DC voltage, the rated voltage pulse slope may be multiplied by U_{NDC} and divided by the applied voltage.

   For all other pulses following equation must be fulfilled:

$$2 \times \int_0^T \left(\frac{dU}{dt}\right)^2 \times dt < U_{NDC} \times \left(\frac{dU}{dt}\right)_{rated}$$

   T is the pulse duration

MAXIMUM REPETITIVE PEAK VOLTAGES	
REPETITIVE SURGE VOLTAGE	**MAXIMUM DURATION PER DAY**
1.1 x U_{NDC}	30 % of on load duration
1.15 x U_{NDC}	30 min
1.2 x U_{NDC}	5 min
1.3 x U_{NDC}	1 min
1.5 x U_{NDC}	110 ms

Note

- The capacitor unit may be subjected to the following surge without any significant reduction of lifetime expectancy

For technical questions, contact: dc-film@vishay.com
THIS DOCUMENT IS SUBJECT TO CHANGE WITHOUT NOTICE. THE PRODUCTS DESCRIBED HEREIN AND THIS DOCUMENT ARE SUBJECT TO SPECIFIC DISCLAIMERS, SET FORTH AT www.vishay.com/doc?91000

INSPECTION REQUIREMENTS		
SUB-CLAUSE NUMBER AND TEST	**CONDITIONS**	**PERFORMANCE REQUIREMENTS**
ROUTINE TEST - FINAL INSPECTION		
5.14.2-1 External inspection, visual examination		Legible marking as specified
5.14.2-2 Dimensions		See specification drawing
5.3-1 Capacitance	1 kHz at room temperature	See specific reference data
5.3-2 tan δ	1 kHz at room temperature 10 kHz at room temperature	See specific reference data
5.5.1-2 Voltage test between terminals	1.5 x U_{NDC} at T_{amb} Duration: 10 s	No visible damage or puncture No flashover
5.7 Insulation resistance	U_{NDC} ≤ 500 V measuring voltage 100 V at room temperature U_{NDC} > 500 V measuring voltage 500 V at room temperature Duration: 1 min	See specific reference data
TYPE TESTS		
5.14.2 External inspection	Check for finish, marking and overall dimensions	Legible marking and finish as specified Dimensions: See specification drawing
5.14.0 Initial measurements	Capacitance at 1 kHz tan δ at 10 kHz	
5.14.1-1/4 Robustness of terminations IEC 60068-2-21	Tensile Ua1 Wire diameter / Section modulus / Load ≤ 0.8 mm / ≤ 0.5 mm² / 10 N ≤ 1.25 mm / ≤ 1.2 mm² / 20 N Duration: 10 s ± 1 s Bending, Ub method 1 Wire diameter / Section modulus / Load ≤ 0.8 mm / ≤ 0.5 mm² / 10 N ≤ 1.25 mm / ≤ 1.2 mm² / 20 N 4 x 90°, duration: 2 s to 3 s/bend	
5.14.1-6 Resistance to soldering heat IEC 60068-2-20	No pre-drying, method 1A Solder bath: 260 °C ± 5 °C Duration: 10 s ± 1 s	
5.14.4 Final measurements	Capacitance tan δ	|ΔC/C| ≤ 0.5 % Increase of tan δ ≤ 0.0050 compared to the values measured in 5.14.0
5.14.0 Initial measurements	Capacitance at 1 kHz tan δ at 10 kHz	
5.14.3-1 Vibration IEC 60068-2-6	10 Hz to 55 Hz; amplitude ± 0.35 mm or acceleration 98 m/s² Test duration: 10 frequency cycles 3 axes offset from each other by 90° 1 octave/min Visual examination	No visible damage

For technical questions, contact: dc-film@vishay.com
THIS DOCUMENT IS SUBJECT TO CHANGE WITHOUT NOTICE. THE PRODUCTS DESCRIBED HEREIN AND THIS DOCUMENT ARE SUBJECT TO SPECIFIC DISCLAIMERS, SET FORTH AT www.vishay.com/doc?91000

INSPECTION REQUIREMENTS		
SUB-CLAUSE NUMBER AND TEST	**CONDITIONS**	**PERFORMANCE REQUIREMENTS**
5.14.3-2 Shock or impact IEC 60068-2-6	Pulse shape: half sine Acceleration: 490 m/s2 Duration of pulse: 11 ms Visual examination	 No visible damage
5.14.4 Final measurements	Capacitance tan δ	 $\|\Delta C/C\| \leq 0.5$ % Increase of tan $\delta \leq 0.0050$ compared to the values measured in 5.14.0
5.5.3-1 Initial measurements	Capacitance at 1 kHz tan δ at 10 kHz R insulation	
5.5.3-2 Voltage test between terminals	1.5 x U_{NDC} at T_{amb} Duration: 60 s	
5.5.3-3 Final measurements	Capacitance tan δ R insulation	 $\|\Delta C/C\| \leq 0.5$ % Increase of tan $\delta \leq 0.0050$ R insulation ≤ 50 % of specified values
5.9-1 Initial measurements	Capacitance at 1 kHz tan δ at 10 kHz	
5.9-2 Surge discharge test	1.1 x U_{NDC} Number of discharges: 5 Time lapse: every 2 min (10 min total)	
5.9-2 Voltage test between terminals	Within 5 min after the surge discharge test Duration: 60 s 1.5 x U_{NDC} at T_{amb}	
5.9-3 Final measurements	Capacitance tan δ at 10 kHz	 $\|\Delta C/C\| \leq 1.0$ % tan $\delta \leq 1.2$ x initial tan $\delta + 0.0001$ compared to the values measured in 5.9-1
5.11-1 Initial measurements	Capacitance at 1 kHz tan δ at 10 kHz	
5.11-2 Self healing test	1.5 x U_{NDC} Duration: 10 s Number of clearings ≤ 5 Clearing = Voltage drop of 5 % increase the voltage at 100 V/s till 5 clearings occur with a max. of 2.5 x U_{NDC} for a duration of 10 s	
5.11-3 Final measurements	Capacitance tan δ	 $\|\Delta C/C\| \leq 0.5$ % tan $\delta \leq 1.2$ x initial tan $\delta + 0.0001$ compared to the values measured in 5.11-1

For technical questions, contact: dc-film@vishay.com
THIS DOCUMENT IS SUBJECT TO CHANGE WITHOUT NOTICE. THE PRODUCTS DESCRIBED HEREIN AND THIS DOCUMENT ARE SUBJECT TO SPECIFIC DISCLAIMERS, SET FORTH AT www.vishay.com/doc?91000

INSPECTION REQUIREMENTS		
SUB-CLAUSE NUMBER AND TEST	**CONDITIONS**	**PERFORMANCE REQUIREMENTS**
5.13-0 Initial measurements	Capacitance at 1 kHz tan δ at 10 kHz	
5.13-1 Change of temperature according to IEC 60682-2-14	Test Nb $T_{max.}$ = 85 °C $T_{min.}$ = - 40 °C Transition time: 1 h, equivalent to 1 °C/min 5 cycles	
5.13-2 Damp heat steady state according to IEC 60682-2-78	Test Ca $T_{max.}$ = 40 °C + 2 °C RH = 93 % ± 3 % Duration: 56 days	
5.5.3-2 Voltage test between terminals	1.5 x U_{NDC} at ambient temperature Duration: 60 s	
5.13-3 Final measurements	Visual examination Capacitance tan δ at 1 V_{RMS} 10 kHz	No puncturing or flashover Self healing punctures are permitted $\lvert\Delta C/C\rvert \leq 2.0$ % Increase of tan $\delta \leq 0.0150$ compared to the values measured in 5.13-0
5.10.0 Initial measurements	Capacitance at 1 kHz tan δ at 10 kHz	
5.10-1 Thermal stability test under overload conditions	Natural cooling T_{amb} ± 5 °C 1.21 x $P_{max.} = (U_2/2) \times W_2 \times C \times \tan \delta =$ 1.21 x $(I^2_{max.}/W_2 \times C) \times \tan \delta$ with $W_2 = 2 \times p \times f_2$ for $I_{max.}$ (see specific reference data) f_2 = 10 kHz Duration: 48 h	
5.10-2 Final measurements	Measure the temperature every 1.5 h during the last 6 h	Temperature rise ≤ 1 °C $\lvert\Delta C/C\rvert \leq 2.0$ % Increase of tan $\delta \leq 1.2$ x initial δ + 0.0150
5.12 Resonance frequency measurement	Impedance analyser at T_{amb}	< 0.9 times the value as specified in typical curve “Resonant frequency” of this specification

For technical questions, contact: dc-film@vishay.com
THIS DOCUMENT IS SUBJECT TO CHANGE WITHOUT NOTICE. THE PRODUCTS DESCRIBED HEREIN AND THIS DOCUMENT ARE SUBJECT TO SPECIFIC DISCLAIMERS, SET FORTH AT www.vishay.com/doc?91000

INSPECTION REQUIREMENTS		
SUB-CLAUSE NUMBER AND TEST	**CONDITIONS**	**PERFORMANCE REQUIREMENTS**
5.15-0 Initial measurements	Capacitance at 1 kHz tan δ at 10 kHz	
5.15-1 Endurance test between terminals	Sequence: 1.3 x U_{NDC} at 85 °C 1.3 x U_{OPDC} at 105 °C Duration: 500 h 1000 x discharge at 1.4 x I_{peak} (maximum respective peak current in continuous operation) 1.3 x U_{NDC} at 85 °C 1.3 x U_{OPDC} at 105 °C Duration: 500 h	
5.15-2 Final measurement	Capacitance tan δ	$\lvert\Delta C/C\rvert \leq 3.0$ % Increase of tan $\delta \leq 0.0150$ compared to the values measured in 5.15-0
5.16.3-0 Initial measurements	Capacitance at 1 kHz	
5.16.3-1 Desctruction test sequence High DC voltage test	$T_{max.}$ = 85 °C Product enveloped with cheese cloth 3 x U_{NDC} for DC voltage until repetitive product healings occur Duration = 15 min	Audible healings or check healings with oscilloscope
High AC voltage test	AC RMS voltage = $U_{NDC}/2\sqrt{2}$ with minimum of 250 V_{AC} Duration = 5 min Repeat destruction sequence 3 x	
5.16.3-2 Final measurements	Visual examination	No puncturing, flashover or burning of the cheese cloth Self healing punctures are permitted

Note

- Sub-clause numbers of tests and performance requirements refer to the “Sectional Specification, IEC-publication 61071”

For technical questions, contact: dc-film@vishay.com
THIS DOCUMENT IS SUBJECT TO CHANGE WITHOUT NOTICE. THE PRODUCTS DESCRIBED HEREIN AND THIS DOCUMENT ARE SUBJECT TO SPECIFIC DISCLAIMERS, SET FORTH AT www.vishay.com/doc?91000

Disclaimer

ALL PRODUCT, PRODUCT SPECIFICATIONS AND DATA ARE SUBJECT TO CHANGE WITHOUT NOTICE TO IMPROVE RELIABILITY, FUNCTION OR DESIGN OR OTHERWISE.

Vishay Intertechnology, Inc., its affiliates, agents, and employees, and all persons acting on its or their behalf (collectively, “Vishay”), disclaim any and all liability for any errors, inaccuracies or incompleteness contained in any datasheet or in any other disclosure relating to any product.

Vishay makes no warranty, representation or guarantee regarding the suitability of the products for any particular purpose or the continuing production of any product. To the maximum extent permitted by applicable law, Vishay disclaims (i) any and all liability arising out of the application or use of any product, (ii) any and all liability, including without limitation special, consequential or incidental damages, and (iii) any and all implied warranties, including warranties of fitness for particular purpose, non-infringement and merchantability.

Statements regarding the suitability of products for certain types of applications are based on Vishay's knowledge of typical requirements that are often placed on Vishay products in generic applications. Such statements are not binding statements about the suitability of products for a particular application. It is the customer's responsibility to validate that a particular product with the properties described in the product specification is suitable for use in a particular application. Parameters provided in datasheets and / or specifications may vary in different applications and performance may vary over time. All operating parameters, including typical parameters, must be validated for each customer application by the customer's technical experts. Product specifications do not expand or otherwise modify Vishay's terms and conditions of purchase, including but not limited to the warranty expressed therein.

Hyperlinks included in this datasheet may direct users to third-party websites. These links are provided as a convenience and for informational purposes only. Inclusion of these hyperlinks does not constitute an endorsement or an approval by Vishay of any of the products, services or opinions of the corporation, organization or individual associated with the third-party website. Vishay disclaims any and all liability and bears no responsibility for the accuracy, legality or content of the third-party website or for that of subsequent links.

Vishay products are not designed for use in life-saving or life-sustaining applications or any application in which the failure of the Vishay product could result in personal injury or death unless specifically qualified in writing by Vishay. Customers using or selling Vishay products not expressly indicated for use in such applications do so at their own risk. Please contact authorized Vishay personnel to obtain written terms and conditions regarding products designed for such applications.

No license, express or implied, by estoppel or otherwise, to any intellectual property rights is granted by this document or by any conduct of Vishay. Product names and markings noted herein may be trademarks of their respective owners.

© 2025 VISHAY INTERTECHNOLOGY, INC. ALL RIGHTS RESERVED

THIS DOCUMENT IS SUBJECT TO CHANGE WITHOUT NOTICE. THE PRODUCTS DESCRIBED HEREIN AND THIS DOCUMENT ARE SUBJECT TO SPECIFIC DISCLAIMERS, SET FORTH AT www.vishay.com/doc?91000