The Future of Analog IC Technology®

MP2615

2A, 1- or 2- Cell Li-ion Battery Charger In 3mm x 3mm Package

DESCRIPTION

The MP2615 is a high efficiency switch mode battery charger suitable for 1- or 2- cell lithium-ion or lithium-Polymer applications. The MP2615 is capable of delivering 2A of charge current programmable via an accurate sense resistor over the entire input range.

The MP2615 regulates the charge current and full battery voltage using two control loops to achieve high accuracy constant current (CC) charge and constant voltage (CV) charge.

Constant-off-time (COT) mode control allows operation up to 99% duty cycle when the battery voltage is close to the input voltage and in order to keep charge current always at a relative high level.

Battery temperature and charging status are always monitored during each charging cycle. Two status monitor output pins are provided to indicate the battery charging status and input power status. The MP2615 also features internal reverse blocking protection.

The MP2615 is available in a 3mm × 3mm 16-pin QFN package.

FEATURES

- 4.75V to 18V Operating Input Voltage
- Up to 99% Duty Cycle Operation
- Up to 2A Programmable Charging Current
- ±0.75% Full Battery Voltage Accuracy
- 4.1V/Cell and 4.2V/Cell Selection for Full Battery Voltage
- Full Integrated Power Switches
- Internal Loop Compensation
- No External Reverse Blocking Diode Required
- Preconditioning for Fully Depleted Battery
- Charging Operation Indicator
- Programmable Safety Timer
- Thermal Shutdown Protection
- Cycle-by-Cycle Over Current Protection
- Battery Temperature Monitor and Protection

APPLICATIONS

- Smart Phones
- Portable Hand-held Solutions
- Portable Media Players

All MPS parts are lead-free and adhere to the RoHS directive. For MPS green status, please visit MPS website under Products, Quality Assurance page.

"MPS" and "The Future of Analog IC Technology" are registered trademarks of Monolithic Power Systems, Inc.

ADAM (Analog Digital Adaptive Modulation) and AAM (Advanced Asynchronous Mode) are trademarks of Monolithic Power Systems, Inc.

TYPICAL APPLICATION

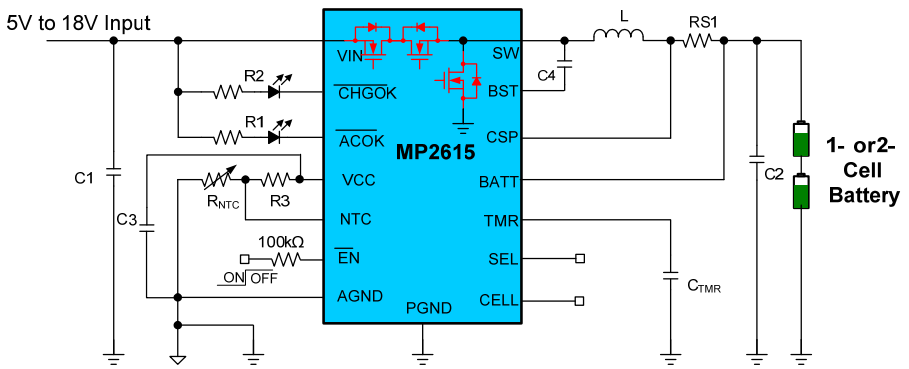

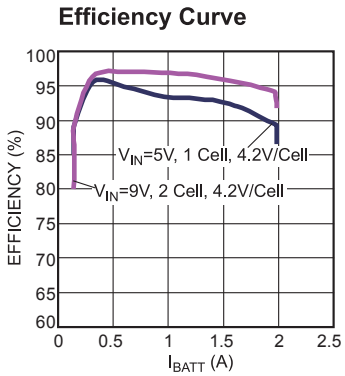

MPS Proprietary Information. Patent Protected. Unauthorized Photocopy and Duplication Prohibited.
© 2019 MPS. All Rights Reserved.

ORDERING INFORMATION

Part Number*	Package	Top Marking
MP2615GQ	QFN-16 (3mm×3mm)	*See Below*

* For Tape & Reel, add suffix –Z (e.g. MP2615GQ–Z);

TOP MARKING

$\overline{\text{AEGY}}$
LLL

AEG: product code of MP2615GQ
Y: year code
LLL: lot number

PACKAGE REFERENCE

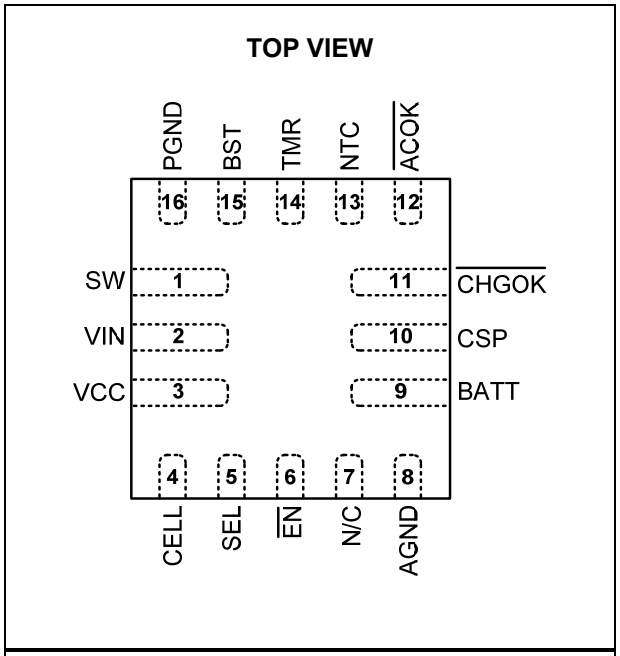

QFN-16 (3mm×3mm)

MPS Proprietary Information. Patent Protected. Unauthorized Photocopy and Duplication Prohibited.
© 2019 MPS. All Rights Reserved.

ABSOLUTE MAXIMUM RATINGS (1)

V_{SW} ..... –0.3V to 23V
V_{IN}, V_{ACOK}, V_{CHGOK} ..... –0.3V to 23V
V_{BATT}, V_{CSP} ..... –0.3V to 12V
V_{BST} ..... V_{SW} + 6V
All Other Pins ..... –0.3V to 6V
Junction Temperature ..... 150°C
Lead Temperature ..... 260°C
Continuous Power Dissipation (T_A = +25°C) (2)
..... 2.5W
Operating Temperature ..... –40°C to +85°C

Recommended Operating Conditions (3)

V_{IN} ..... 4.75V to 18V
V_{BATT} ..... 2V to 8.4V
Operating Junction Temp. (T_J). –40°C to +125°C

Thermal Resistance (4)

	θ_{JA}	θ_{JC}	
QFN-16 (3mmx3mm)	50	12	°C/W

Notes:
1) Exceeding these ratings may damage the device.
2) The maximum allowable power dissipation is a function of the maximum junction temperature T_J (MAX), the junction-to-ambient thermal resistance θ_{JA}, and the ambient temperature T_A. The maximum allowable continuous power dissipation at any ambient temperature is calculated by P_D (MAX) = (T_J (MAX)-T_A)/θ_{JA}. Exceeding the maximum allowable power dissipation will cause excessive die temperature, and the regulator will go into thermal shutdown. Internal thermal shutdown circuitry protects the device from permanent damage.
3) The device is not guaranteed to function outside of its operating conditions.
4) Measured on JESD51-7, 4-layer PCB.

MPS Proprietary Information. Patent Protected. Unauthorized Photocopy and Duplication Prohibited.
© 2019 MPS. All Rights Reserved.

ELECTRICAL CHARACTERISTICS

V_{IN} = 12V, V_{CELL} = 0V, V_{SEL} = 0V, C1 = 22μF, C2=22μF, T_A = 25°C, unless otherwise noted.

Parameter	Symbol	Condition	Min	Typ	Max	Units
Input Voltage and Current						
Input Voltage	V_{IN}	V_{CELL} = 4V	4.5	5	18	V
		V_{CELL} = 0V	8.75	12	18	
Under Voltage Lockout Threshold Rising	V_{UVLO}		3.55	3.75	3.95	V
Under Voltage Lockout Threshold Hysteresis				225		mV
Supply Current	I_{SHDN}	$\overline{EN}$ = 4V, Shutdown Current		0.27		mA
	I_Q	$\overline{EN}$ = 0V, Quiescent Current		1.1		
Power MOS						
High-side Switch On Resistance	$R_{H_DS(ON)}$	Measured from VIN to SW		110		mΩ
Low-side Switch On Resistance	$R_{L_DS(ON)}$			110		mΩ
Switch Leakage		$\overline{EN}$ = 4V, V_{SW} = 0V		0	1	μA
Frequency and Time Parameter						
Switching Frequency	F_{SW}	V_{BATT} = 7.5V		760		kHz
Fold-back Frequency		V_{BATT} = 0V		160		kHz
Minimum Off Time (5)	T_{OFF}	V_{BATT} = 9V		200		ns
Charging Parameter						
Terminal Battery Voltage	V_{BATT_FULL}	V_{SEL} = 0V	4.168	4.2	4.231	V/Cell
		V_{SEL} = 4V	4.069	4.1	4.131	
Battery Over Voltage Threshold	V_{BOVP}	V_{CELL} = 0V, V_{SEL}=0V	8.34	8.71	9.08	
		V_{CELL} = 0V, V_{SEL}=4V	8.14	8.51	8.88	
		V_{CELL} = 4V, V_{SEL}=0V	4.17	4.36	4.54	
		V_{CELL} = 4V, V_{SEL}=4V	4.07	4.26	4.44	
Recharge Threshold at V_{BATT}	V_{RECH}	V_{SEL} = 0V		4.0		
		V_{SEL} = 4V		3.9		
Recharge Hysteresis				150		mV/Cell
Trickle Charge Voltage Threshold	V_{TC}	V_{SEL} = 0V		3		V/Cell
		V_{SEL} = 4V		2.91		
Trickle Charge Hysteresis				225		mV/Cell
Peak Current Limit		CC	3.2			A
		Trickle		2.2		
CC Current	I_{CC}	RS1 = 50mΩ	1.8	2	2.2	A
Trickle Charge Current	I_{TC}		5%	10%	15%	I_{CC}
Termination Current Threshold	I_{BF}		5%	10%	15%	I_{CC}
V_{IN} minimum Head-room (reverse blocking)		$V_{IN} - V_{BATT}$		300		mV

MPS Proprietary Information. Patent Protected. Unauthorized Photocopy and Duplication Prohibited.
© 2019 MPS. All Rights Reserved.

ELECTRICAL CHARACTERISTICS *(continued)*

V_{IN} = 12V, V_{CELL} = 0V, V_{SEL} = 0V, C1 = 22µF, C2=22µF, T_A = 25°C, unless otherwise noted.

Parameter	Symbol	Condition	Min	Typ	Max	Units
Maximum Current Sense Voltage (CSP to BATT)	V_{SENSE}		90	100	110	mV
CSP, BATT Current	I_{CSP}, I_{BATT}	Charging disabled			3	µA
ACOK/CHGOK Open-drain Sink Current		V_{DRAIN} = 0.3V	5			mA
VCC Regulator Output						
VCC Output Voltage	V_{CC}		4.35	4.5	4.65	V
VCC Load Regulation	ΔV_{CC}	I_{LOAD}=0 to 10mA			10	mV
EN Control						
$\overline{EN}$ Input Low Voltage					0.4	V
$\overline{EN}$ Input High Voltage			1.8			V
$\overline{EN}$ Input Current	I_{EN}	$\overline{EN}$ = 4V		4		µA
		$\overline{EN}$ = 0V		0.2		
Logic						
CELL Input Low Voltage	V_L				0.4	V
CELL Input High Voltage	V_H		1.8			V
SEL Input Low Voltage	V_L				0.4	V
SEL Input High Voltage	V_H		1.8			V
Timer Protection						
Trickle Charge Time	$t_{Trickle_tmr}$	C_{TMR} = 0.47µF		30		Mins
CC/CV Charge Time	t_{Total_tmr}	C_{TMR} = 0.47µF		165		
NTC Protection						
NTC Low Temp Rising Threshold		R_{NTC}=NCP18X103, 0°C	72	73.3	74.6	%V_{CC}
NTC Low Temp Rising Threshold Hysteresis				2		
NTC High Temp Falling Threshold		R_{NTC}=NCP18X103, 50°C	28	29.3	30.6	
NTC Low Temp Falling Threshold Hysteresis				2		
Thermal Protection						
Thermal Shutdown(5)	T_{SHDN}			150		°C
Thermal Shutdown Hysteresis(5)				20		°C
Reverse Leakage Blocking						
Battery Reverse Leakage Current	$I_{LEAKAGE}$	V_{CELL} = 0V			3	uA
		V_{CELL} = 4V			0.5	µA

Notes:

5) Guaranteed by design.

MPS Proprietary Information. Patent Protected. Unauthorized Photocopy and Duplication Prohibited.
© 2019 MPS. All Rights Reserved.

PIN FUNCTIONS

Package Pin #	Name	Description
1	SW	Switch Output
2	VIN	Power Supply Voltage.
3	VCC	Coarse Regulator Output. Internally generated 4.5V. Bypass with a 1μF capacitor to AGND. Used to be low-side switch driver and pull-up bias voltage NTC resistive divider. **Do not connect any external load at this pin.**
4	CELL	Command Input for the Number of Li-Ion Cells. Connect this pin to VCC for 1-cell application and short it to AGND or keep it floating for 2- Cell application.
5	SEL	Input Pin for Setting Terminal Battery Voltage: SEL = Low-level or Float: V_{BATT} = 4.2V/Cell. SEL = High-level: V_{BATT} =4.1V/Cell.
6	$\overline{EN}$	On/ Off Control Input. This pin is pulled to GND with a 1Meg internal resistor. suggest to connect a 100kΩ resistor in series with EN pin.
7	N/C	NO CONNECT. **Please leave this pin floating.**
8	AGND	Analog Ground.
9	BATT	Positive Battery Terminal.
10	CSP	Battery Current Sense Positive Input. Connect a resistor RS1 between CSP and BATT.
11	$\overline{CHGOK}$	Charging Completion Indicator. A logic Low indicates charging operation. The pin will become an open drain once the charge is completed or suspended.
12	$\overline{ACOK}$	Valid Input Supply Indicator. A logic Low on this pin indicates the presence of a valid input power supply.
13	NTC	Thermistor Input. Connect a resistor from this pin to the pin VCC and the thermistor from this pin to ground.
14	TMR	Internal Safety Timer Control. Connect a capacitor from this node to AGND to set the timer. And the timer can be disabled by connecting this pin to AGND directly.
15	BST	Bootstrap pin. A capacitor is needed to drive the power switch's gate above the supply voltage. It is connected between SW and BST pins to form a floating supply across the power switch driver.
16	PGND	Power Ground.

MPS Proprietary Information. Patent Protected. Unauthorized Photocopy and Duplication Prohibited.
© 2019 MPS. All Rights Reserved.

TYPICAL PERFORMANCE CHARACTERISTICS

V_{IN} = 5V/9V, C1=C2=22µF, SEL=Float/High, CELL=Float/High, L=6.8µH, RS1=50mΩ, Battery Simulator, T_A = 25°C, unless otherwise noted.

Charge Current vs. Battery Voltage
V_{IN}=5V, 1 cell

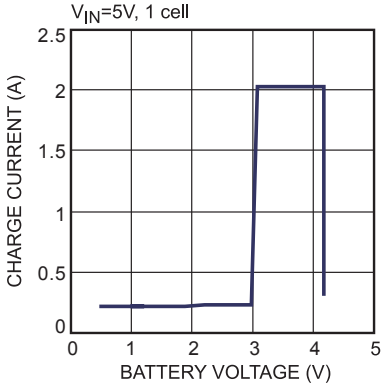

Charge Current vs. Battery Voltage
V_{IN}=9V, 2 cell

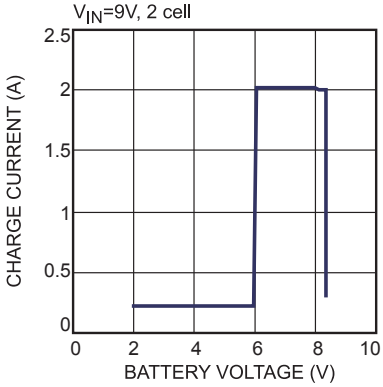

Battery Full Voltage vs. Temperature
1 cell

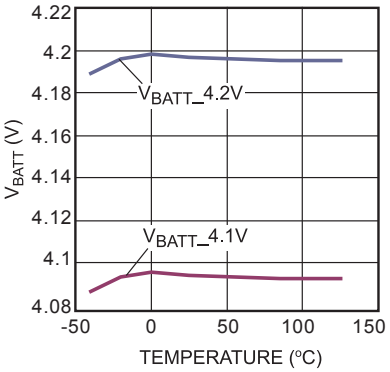

Battery Full Voltage vs. Temperature
2 cell

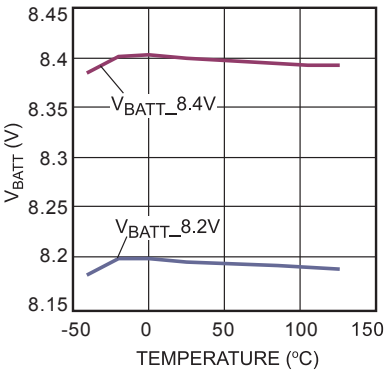

CC Charge Current vs. Temperature
R_{SENSE}=50mΩ

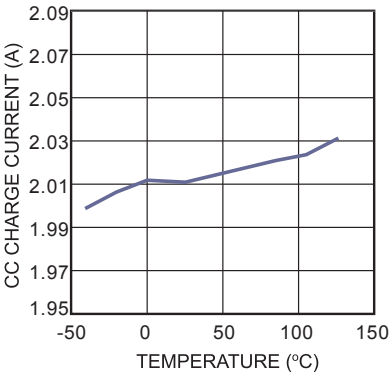

Trickle Charge Current vs. Temperature
R_{SENSE}=50mΩ

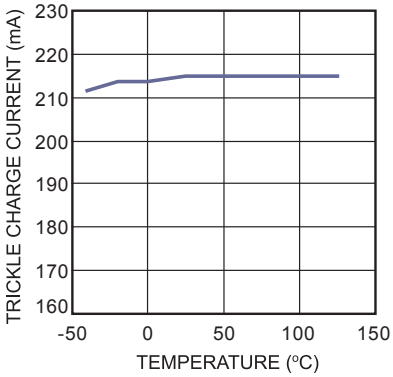

Charge Full Current vs. Temperature
R_{SENSE}=50mΩ

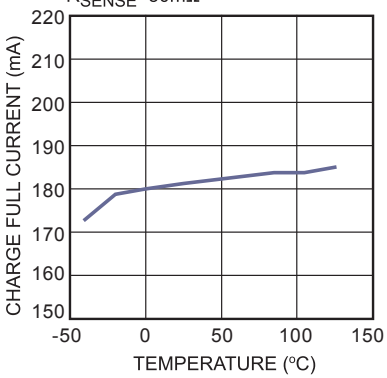

V_{CC} Output vs. Temperature

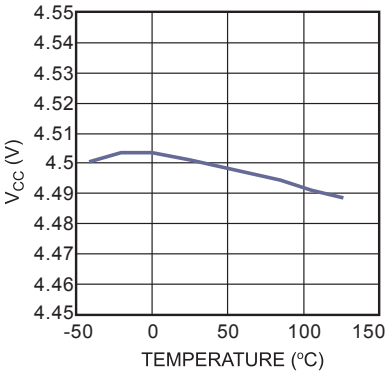

Auto_Recharge Threshold vs. Temperature
1 cell

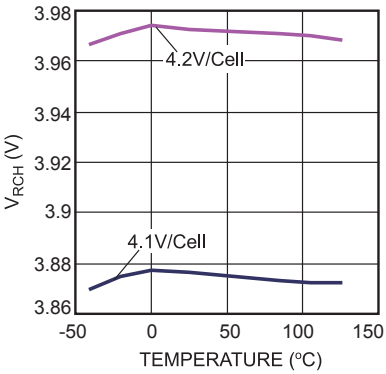

MPS Proprietary Information. Patent Protected. Unauthorized Photocopy and Duplication Prohibited.
© 2019 MPS. All Rights Reserved.

TYPICAL PERFORMANCE CHARACTERISTICS *(continued)*

V_{IN} = 5V/9V, C1=C2=22µF, SEL=Float/High, CELL=Float/High, L=6.8µH, RS1=50mΩ, Battery Simulator, T_A = 25°C, unless otherwise noted.

Battery Charge Curve
V_{IN} = 5V, 1 Cell

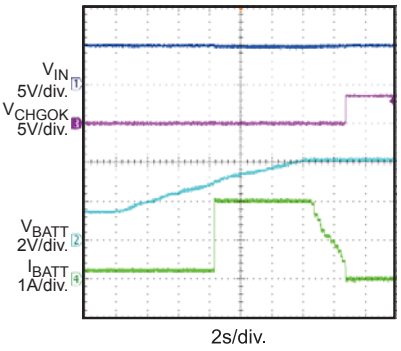

Auto-Recharge
V_{IN} = 5V, 1 Cell

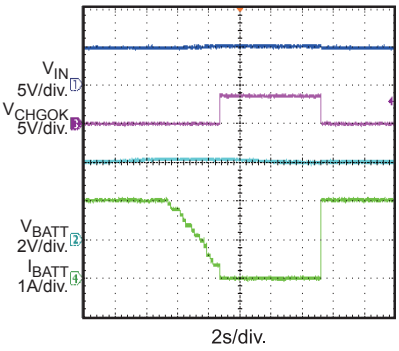

Battery Charge Curve
V_{IN} = 9V, 2 Cell, 4.1V/cell

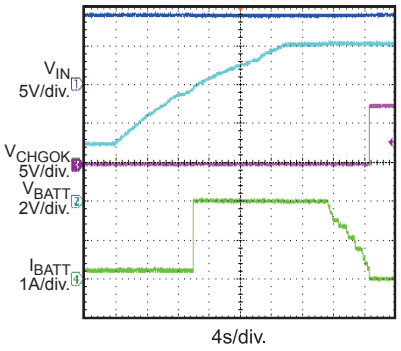

Battery Charge Curve
V_{IN} = 18V, 1 Cell

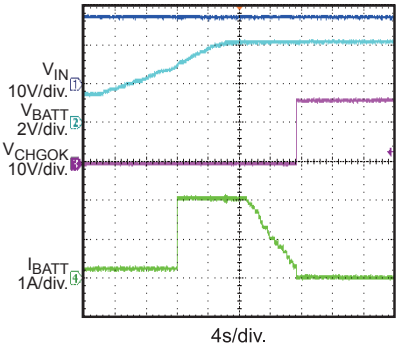

TC Steady State
V_{IN} = 5V, 1 Cell, V_{BATT} = 2V

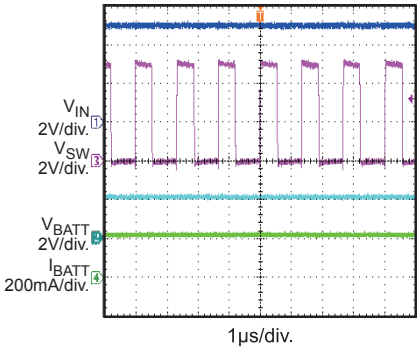

TC Steady State
V_{IN} = 18V, 1 Cell, V_{BATT} = 2.9V

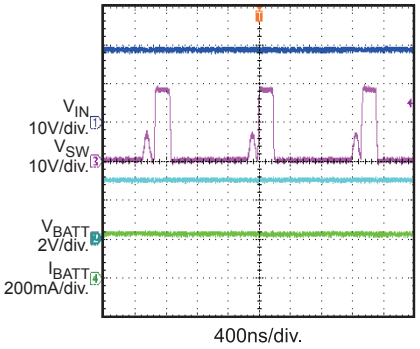

TC Steady State
V_{IN} = 9V, 2 Cell, V_{BATT} = 5.8V

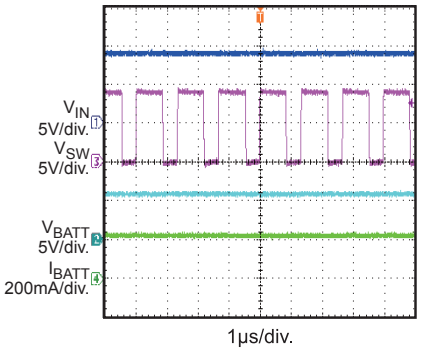

CC Steady State
V_{IN} = 5V, 1 Cell, V_{BATT} = 3.6V

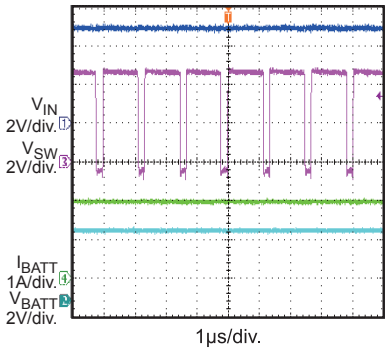

CC Steady State
V_{IN} = 18V, 1 Cell, V_{BATT} = 3.6V

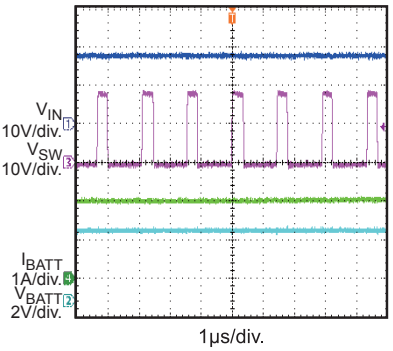

MPS Proprietary Information. Patent Protected. Unauthorized Photocopy and Duplication Prohibited.
© 2019 MPS. All Rights Reserved.

TYPICAL PERFORMANCE CHARACTERISTICS *(continued)*

V_{IN} = 5V/9V, C1=C2=22µF, SEL=Float/High, CELL=Float/High, L=6.8µH, RS1=50mΩ, Battery Simulator, T_A = 25°C, unless otherwise noted.

CC Steady State
V_{IN} = 9V, 2 Cell, V_{BATT} = 7.2V

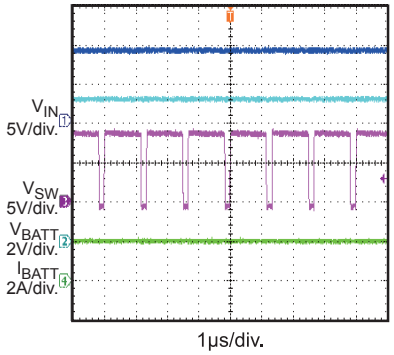

CC Steady State
V_{IN} = 12V, 2 Cell, V_{BATT} = 6V

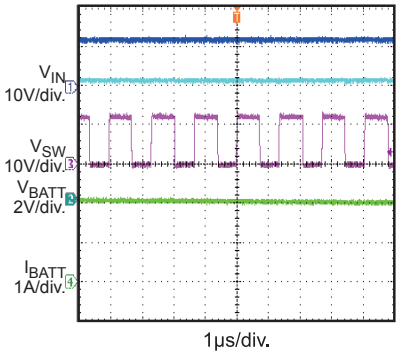

CC Steady State (COT)
V_{IN} = 4.75V, 1 Cell, V_{BATT} = 4.1V

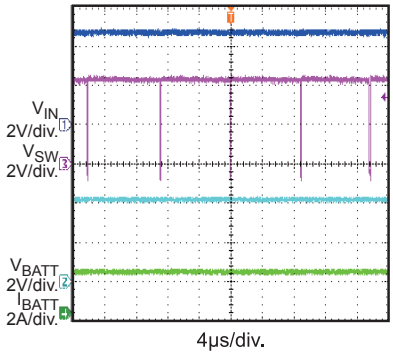

CC Steady State (BST Refresh)
V_{IN} = 8.75V, 2 Cell, V_{BATT} = 8.2V

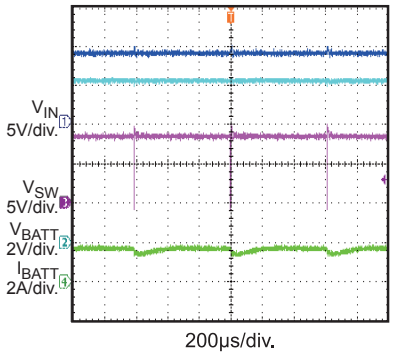

CV Steady State
V_{IN} = 5V, 1 Cell, V_{BATT} = 4.2V

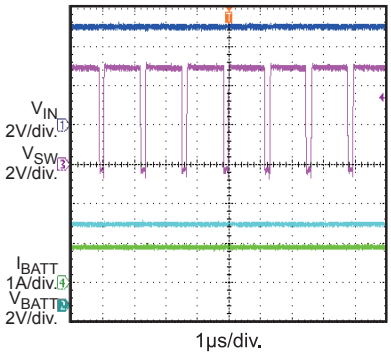

CV Steady State
V_{IN} = 18V, 1 Cell, V_{BATT} = 4.2V

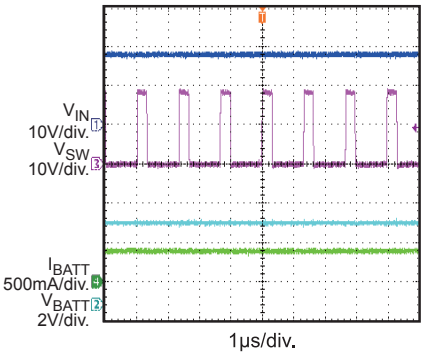

CV Steady State (COT)
V_{IN} = 9V, 2 Cell, V_{BATT} = 8.4V

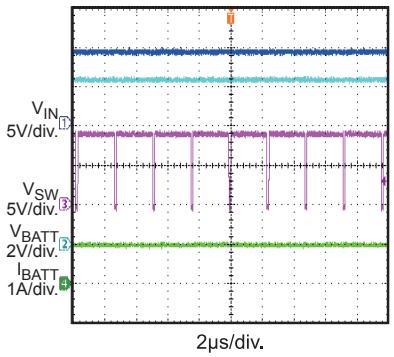

Power On
V_{IN} = 5V, 1 Cell, V_{BATT} = 3.6V

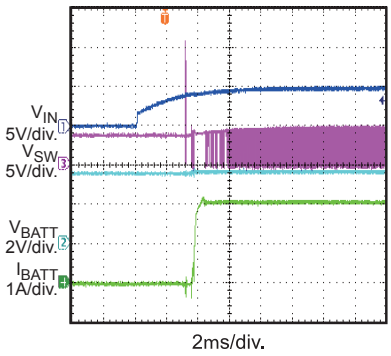

Power OFF
V_{IN} = 5V, 1 Cell, V_{BATT} = 3.6V

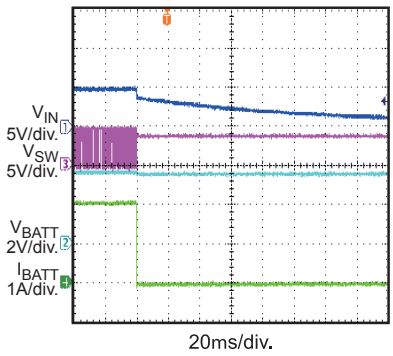

MPS Proprietary Information. Patent Protected. Unauthorized Photocopy and Duplication Prohibited.
© 2019 MPS. All Rights Reserved.

TYPICAL PERFORMANCE CHARACTERISTICS *(continued)*

V_{IN} = 5V/9V, C1=C2=22µF, SEL=Float/High, CELL=Float/High, L=6.8µH, RS1=50mΩ, Battery Simulator, T_A = 25°C, unless otherwise noted.

Hot Insertion
V_{IN} = 5V, 1 Cell, V_{BATT} = 4.2V

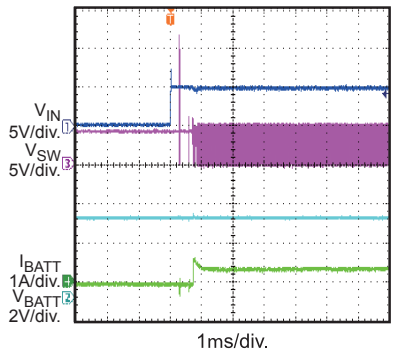

Hot Insertion
V_{IN} = 12V, 1 Cell, V_{BATT} = 3.6V

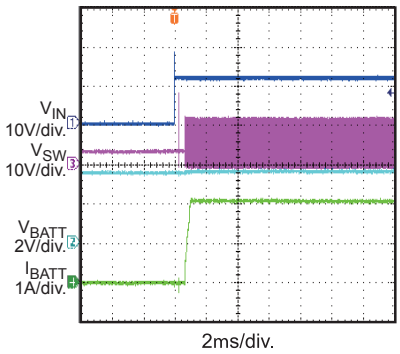

Power On
V_{IN} = 12V, 1 Cell, V_{BATT} = 4.2V

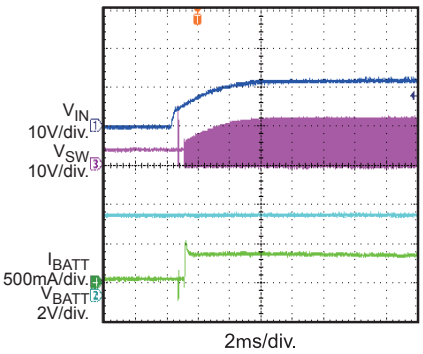

Power On
V_{IN} = 9V, 2 Cell,
V_{BATT} = 7.2V, 4.1V/cell

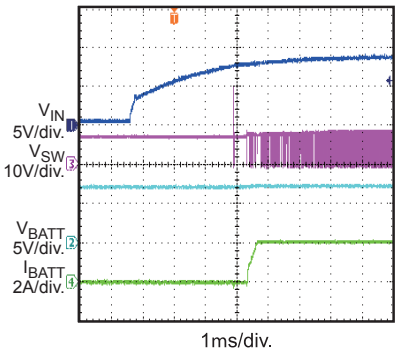

Power Off
V_{IN} = 9V, 2 Cell,
V_{BATT} = 7.2V, 4.1V/cell

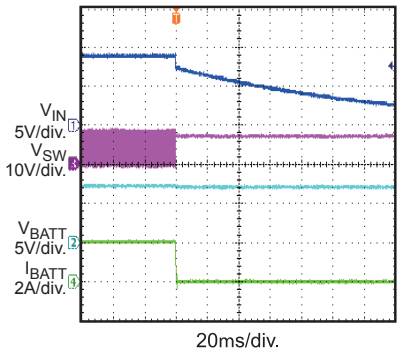

Hot Insertion
V_{IN} = 9V, 2 Cell,
V_{BATT} = 8.2V, 4.1V/cell

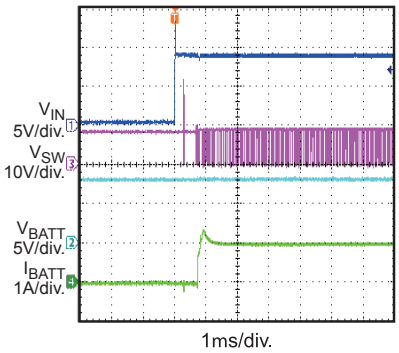

Hot Insertion
V_{IN} = 9V, 2 Cell,
V_{BATT} = 8.2V, 4.1V/cell

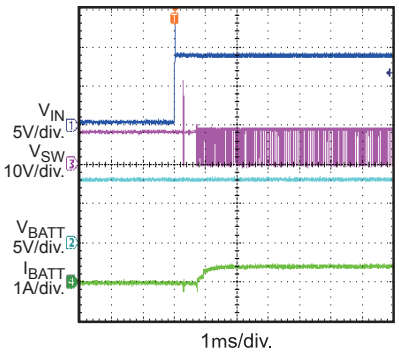

Power On
V_{IN} = 18V, 2 Cell, V_{BATT} = 7.2V

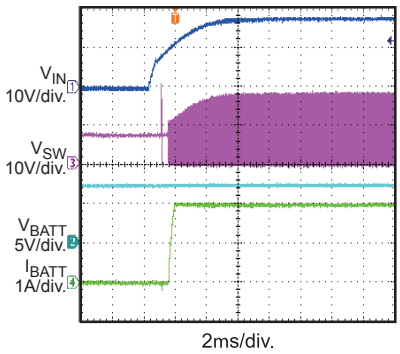

Power On
V_{IN} = 18V, 2 Cell, V_{BATT} = 8.4V

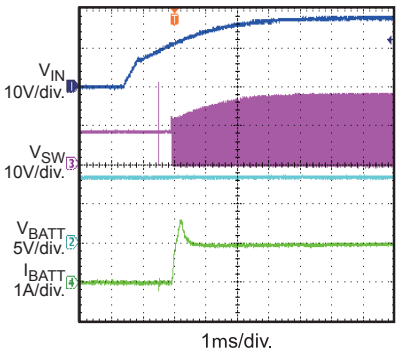

MPS Proprietary Information. Patent Protected. Unauthorized Photocopy and Duplication Prohibited.
© 2019 MPS. All Rights Reserved.

TYPICAL PERFORMANCE CHARACTERISTICS *(continued)*

V_{IN} = 5V/9V, C1=C2=22µF, SEL=Float/High, CELL=Float/High, L=6.8µH, RS1=50mΩ, Battery Simulator, T_A = 25°C, unless otherwise noted.

Power Off
V_{IN} = 18V, 2 Cell, V_{BATT} = 8.4V

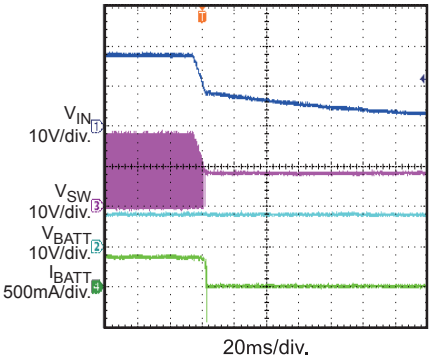

En On
V_{IN} = 5V, 1 Cell, V_{BATT} = 3.6V

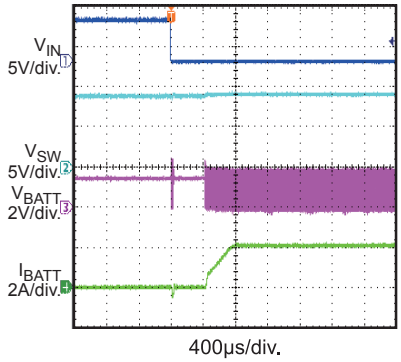

En Off
V_{IN} = 5V, 1 Cell, V_{BATT} = 3.6V

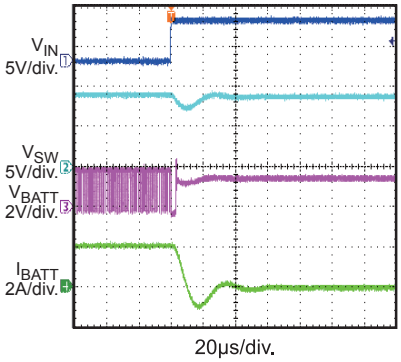

En On
V_{IN} = 5V, 1 Cell, V_{BATT} = 4.2V

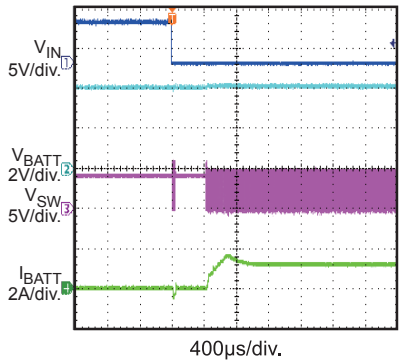

En On
V_{IN} = 9V, 2 Cell, V_{BATT} = 7.2V

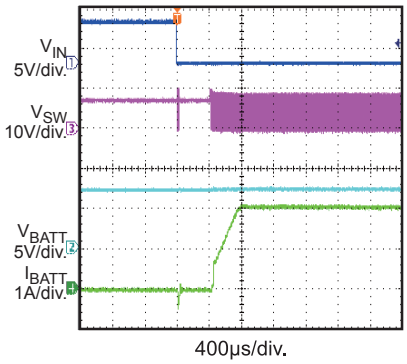

En Off
V_{IN} = 9V, 2 Cell, V_{BATT} = 8.4V

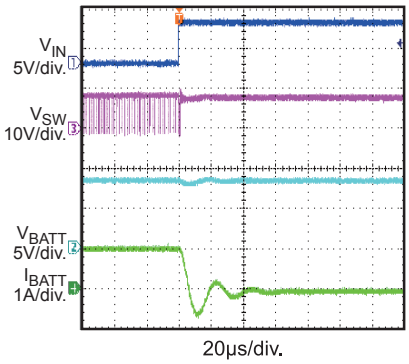

NTC Fault Control
V_{IN} = 5V, 1 Cell, V_{BATT} = 3.6V

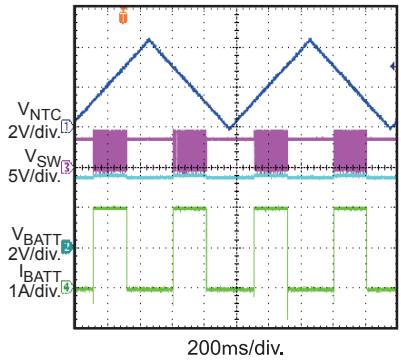

Timer Out
V_{IN} = 9V, 2 Cell,
V_{BATT} = 8.4V, C_{TMR} = 220pF

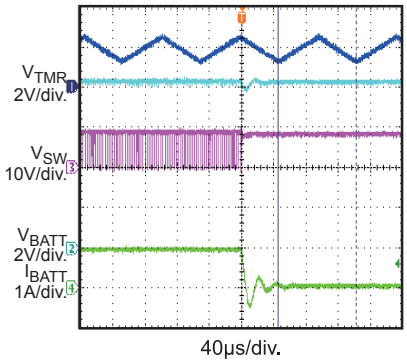

Charge Full Indication
V_{IN} = 5V, 1 Cell, V_{BATT} = 4.2V

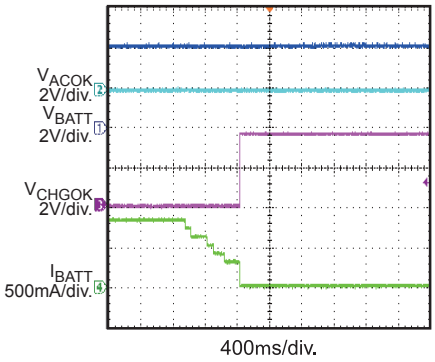

MPS Proprietary Information. Patent Protected. Unauthorized Photocopy and Duplication Prohibited.
© 2019 MPS. All Rights Reserved.

FUNCTIONAL BLOCK DIAGRAM

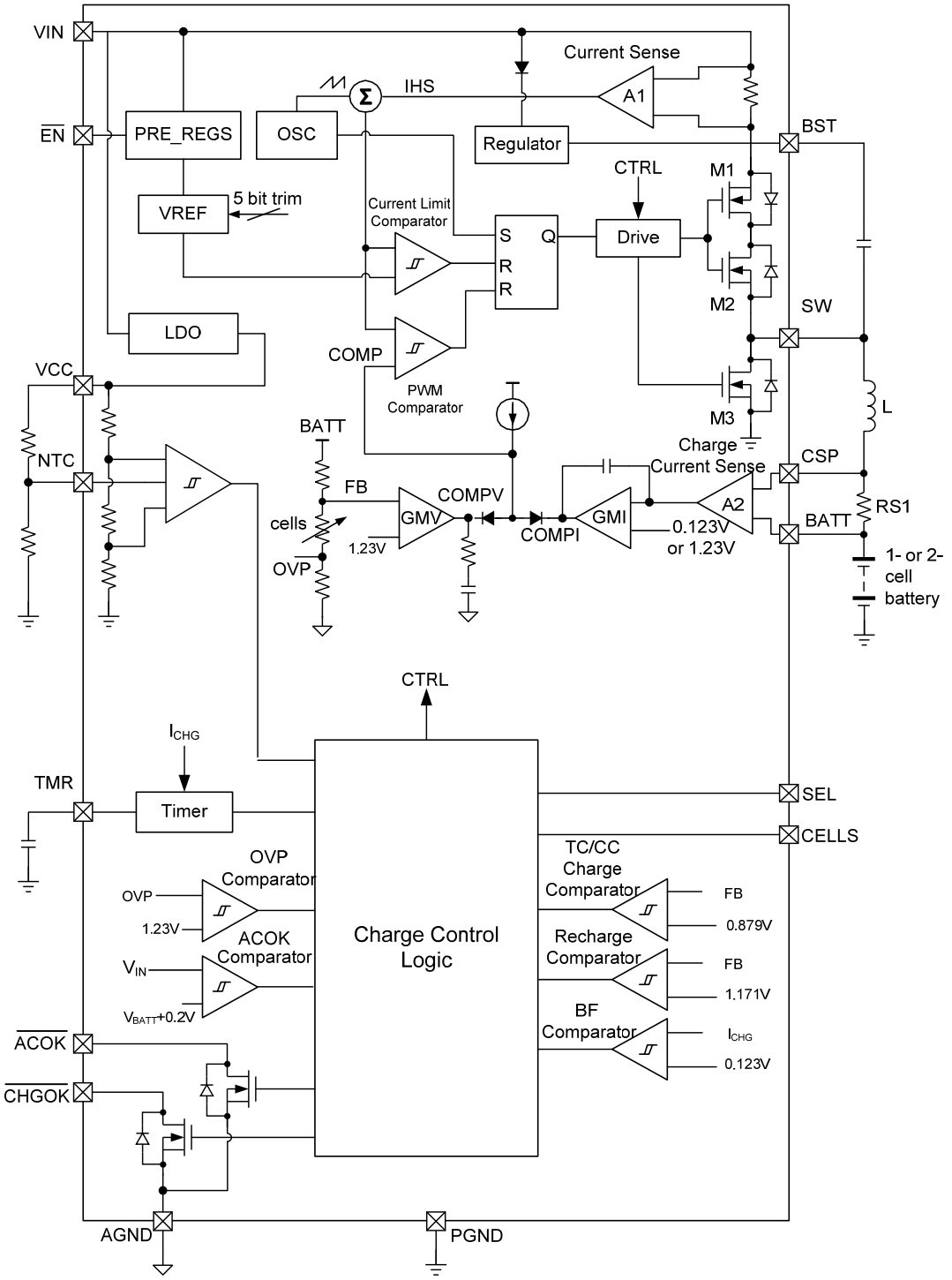

Figure 1: Functional Block Diagram

MPS Proprietary Information. Patent Protected. Unauthorized Photocopy and Duplication Prohibited.
© 2019 MPS. All Rights Reserved.

OPERATION

The MP2615 is a peak current mode controlled switching charger for 1- or 2- cell lithium-ion and lithium-polymer battery. The MP2615 integrates both the high-side and low-side switches of the synchronous BUCK converter to provide high efficiency and save on PCB area.

Charge Cycle (Mode change: TC→ CC→ CV)

The MP2615 regulates the charge current (I_{CHG}) and battery voltage (V_{BATT}) using two control loops to achieve highly-accurate constant current (CC) charge and constant voltage (CV) charge.

As shown in Figure 2, when the $V_{BATT} < V_{TC}$, the MP2615 stays in trickle-charge mode and the output of charge current loop COMPI dominates the control. The battery is charged by a trickle-charge current I_{TC} until the battery voltage reaches V_{TC}. If the charger stays in the trickle-charge mode till the trickle-charge timer is triggered, charging will be terminated.

The MP2615 will enter constant-current charge mode once the battery voltage rises higher than V_{TC}. In this mode the charge current will increase from I_{TC} to I_{CC} to fast charge the battery.

When the battery voltage rises over full battery voltage V_{BATT_FULL}, the charger enters into constant-voltage mode. In constant voltage mode, the battery voltage is regulated at V_{BATT_FULL} precisely and the charge current will fall naturally due to the existing equivalent internal resistance of the battery. For the operation flow chart, please also refer to Figure 4.

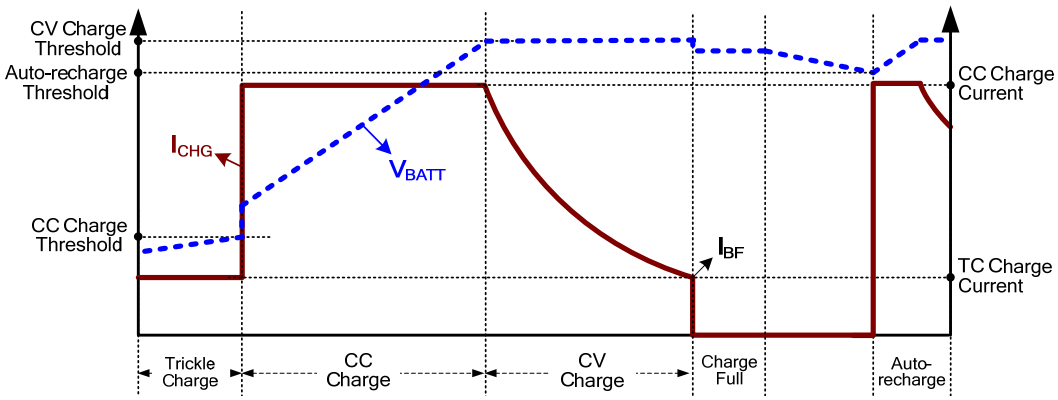

Figure 2: Li-ion Battery Charge Profile

MPS Proprietary Information. Patent Protected. Unauthorized Photocopy and Duplication Prohibited.
© 2019 MPS. All Rights Reserved.

Charge Full Termination and Auto-Recharge

When the charge current drops below the termination threshold (I_{BF}) during the CV charge phase, the charger will stop charging and the $\overline{CHGOK}$ pin becomes open drain. The timer will also be reset and turned off. Once the battery voltage decreases below the recharge threshold V_{RECH} (4.0V/Cell while connect SEL-pin to AGND), recharging will automatically kick in and the timer restarts a new charge cycle.

COT Charge Mode

The MP2615 uses the floating ground method to drive the high-side MOSFET of the buck converter. During the off-time of the high-side MOSFET, the BST capacitor is recharged and the voltage across it is used as the HS-MOS gate drive. Thus a minimum off-time 200ns is required to maintain sufficient voltage at BST capacitor.
When200ns minimum off-time is achieved due to large duty cycle, the MP2615 will enter COT (constant off-time) charge mode. In this mode of operation, switching frequency is slightly decreased in order to achieve 99% duty cycle.

Charge Status Indication

The MP2615 has two open-drain status outputs, $\overline{CHGOK}$ pin and $\overline{ACOK}$ pin. The $\overline{ACOK}$ pin goes low when the input voltage is 300mV larger than battery voltage and over the under voltage lockout threshold. Pin $\overline{CHGOK}$ is used to indicate the status of the charge cycle. Table 1 summarized the operation of both $\overline{CHGOK}$ and $\overline{ACOK}$ according to the status of charge.

Table 1: Charging Status Indication

$\overline{ACOK}$	$\overline{CHGOK}$	**Charger Status**
Low	Low	In charging
Low	High impedance	End of charge; NTC fault; Timer out: $\overline{EN}$ disable; Thermal shutdown;
High impedance	High impedance	V_{IN} absent; $V_{IN} - V_{BATT} < 0.3V$

Safety Timer Operation

The MP2615 has an internal safety timer to terminate charging during time out. The capacitor C_{TMR} connected between the TMR pin and GND is used to set the internal oscillator period,

$$T_P(\text{seconds}) = 0.46 \times C_{TMR}(\text{uF}) \quad (1)$$

This timer limits the max trickle charge time to 8192 internal oscillating periods. If the charger stays in trickle charge mode for longer than the max oscillating periods, it will be terminated and the $\overline{CHGOK}$ becomes open drain to indicate the timer-out fault. If charge cycle successfully goes through trickle charge within the allowed time limit, it enters into the CC charge mode and the timer continues to count the oscillating periods. When the battery is charged full, the timer turns off and clears the counter, waiting for the auto-recharge to restart.

If the charge time during CC/CV mode exceeds 49152 oscillating periods and the battery full has not been qualified, the charger will be terminated and a timer-out fault is also indicated by floating the $\overline{CHGOK}$. The charger can exit the timer-out fault state and the on-chip safety timer restarts counting when one of the following conditions occurs:

- The battery voltage falls below the auto-recharge threshold V_{RECH}.
- A power-on-reset (POR) event occurs;
- $\overline{EN}$ pin is toggled.

The timer can be disabled by pulling TMR-pin to AGND.

Thus, the trickle mode charge time is:

$$t_{Trickle_tmr}(\text{minutes}) = 62.8 \times C_{TMR}(\text{uF}) \quad (2)$$

If connect a C_{TMR} of 0.47uF, the trickle charge time is about 30 minutes.

The CC/CV mode charge time is:

$$t_{Total_tmr}(\text{hours}) = 6.28 \times C_{TMR}(\text{uF}) \quad (3)$$

If connect a C_{TMR} of 0.47uF, the CC/CV charge time is 2.95 hours.

MPS Proprietary Information. Patent Protected. Unauthorized Photocopy and Duplication Prohibited.
© 2019 MPS. All Rights Reserved.

Negative Thermal Coefficient (NTC) Thermistor

The NTC pin allows the MP2615 to sense the battery temperature using the Negative Thermal Coefficient (NTC) resistor available in the battery pack to ensure safe operating environment of the battery. . A resistor with appropriate value should be connected from VCC to NTC pin and the thermistor is connected from NTC pin to AGND. The voltage on the NTC-pin is determined by the resistor divider whose divide-ratio depends on the battery temperature. When the voltage at the NTC pin falls out of the NTC window range, the charging will pause until the battery temperature goes back to normal operating conditions.

As a result the MP2615 will stop charging and report this condition to the status pins. Charging will automatically resume after the temperature falls back within safe range.

Short Circuit Protection

The MP2615 has an internal comparator to check for battery short circuit. Once V_{BATT} falls below 2V, the device detects a battery-short status and the cycle-by-cycle peak current limit falls to about 2.2A to limit the current spike during the battery-short transition. Furthermore, the switching frequency also folds back to minimize the power loss.

Thermal Shutdown Protection

To prevent the chip from overheating during charging, the MP2615 monitors the junction temperature, T_J, of the die. Once T_J reaches the thermal shutdown threshold (T_{SHTDWN}) of 150°C, the charger converter turns off. Once the T_J falls below 130°C the charging will restart.

MPS Proprietary Information. Patent Protected. Unauthorized Photocopy and Duplication Prohibited.
© 2019 MPS. All Rights Reserved.

INPUT POWER UP START UP TIMING FLOW

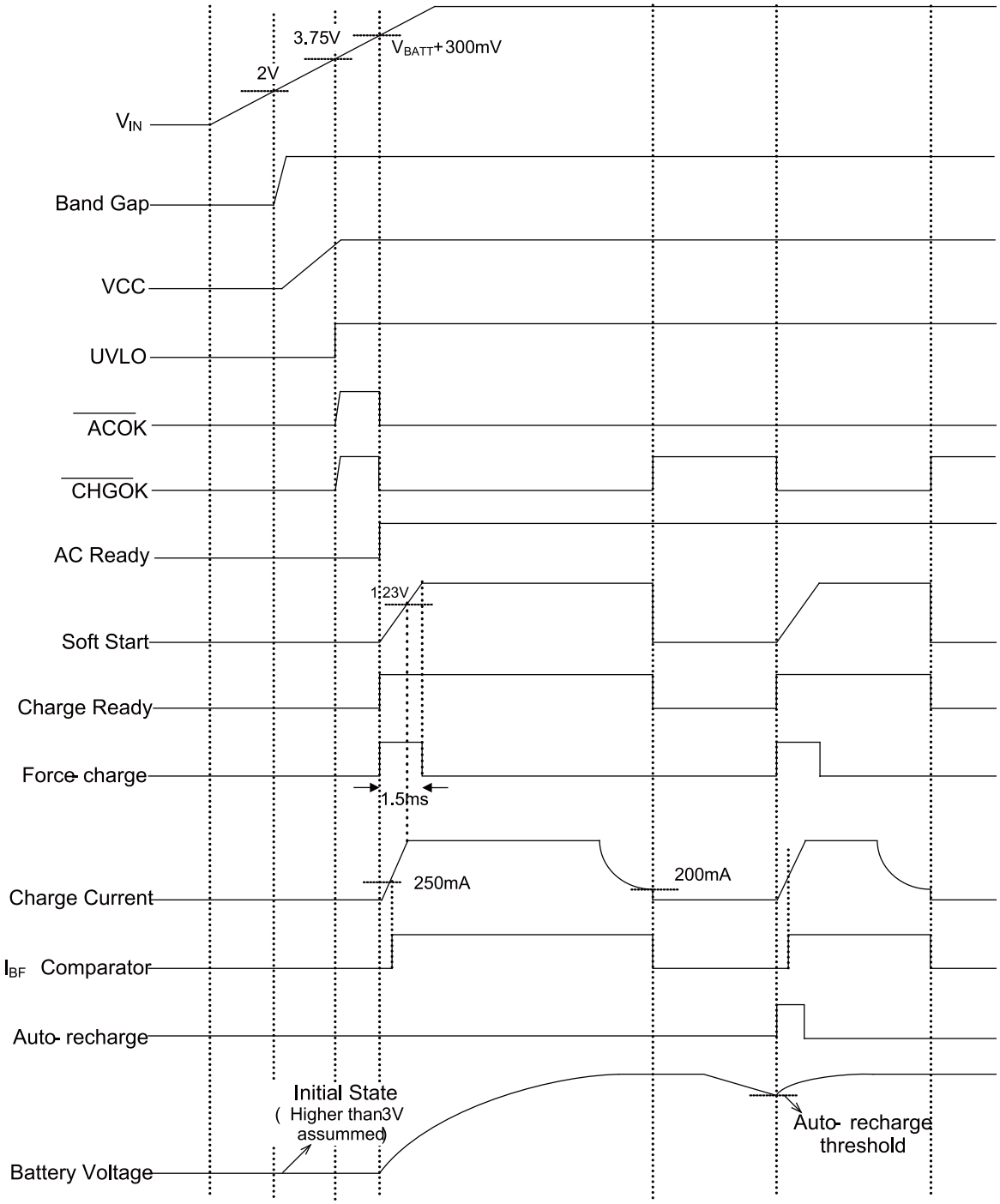

Figure 3: Input Power Start-up Timing Diagram

MPS Proprietary Information. Patent Protected. Unauthorized Photocopy and Duplication Prohibited.
© 2019 MPS. All Rights Reserved.

OPERATION FLOW CHART

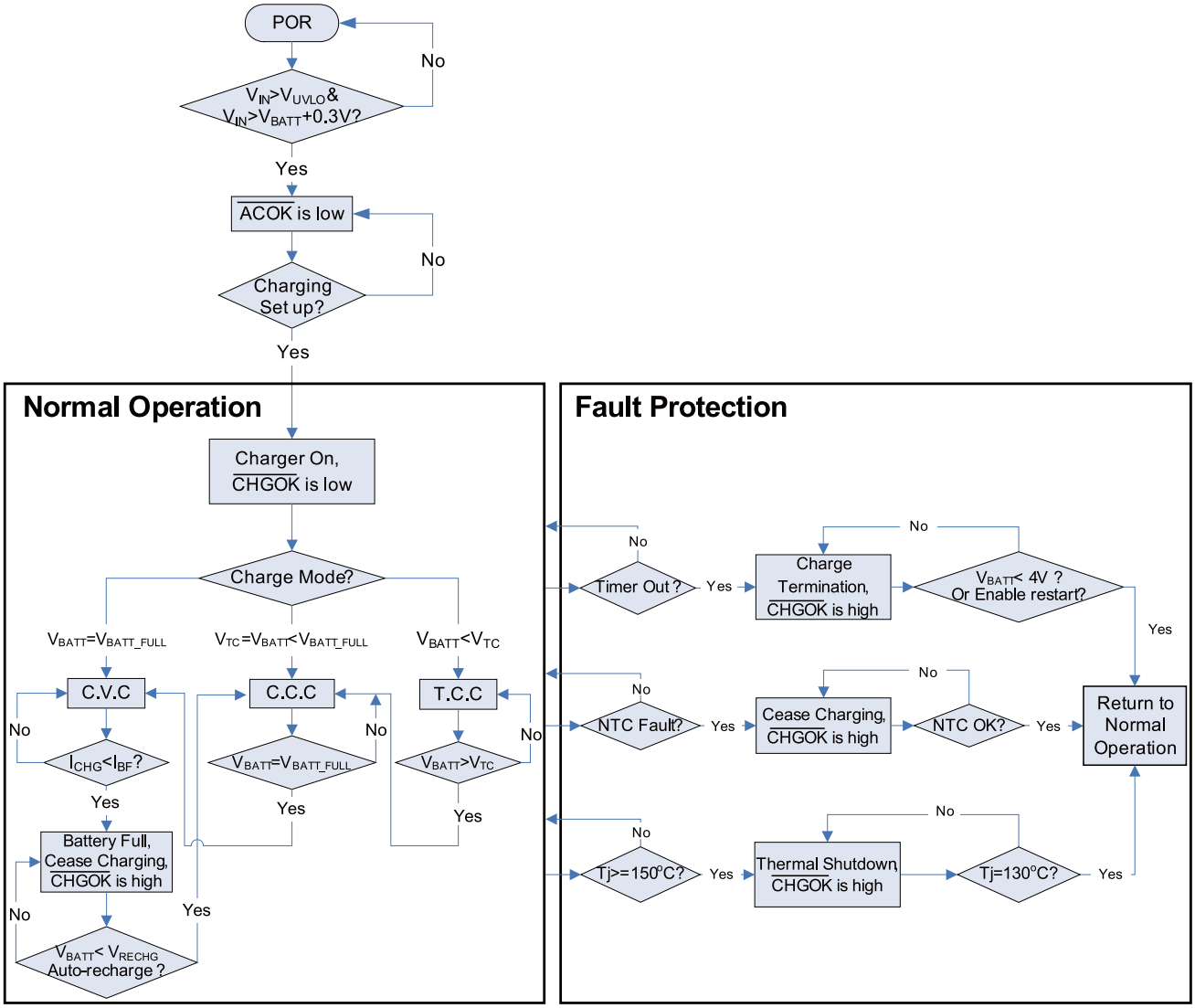

Figure 4: Operation Flow Chart

MPS Proprietary Information. Patent Protected. Unauthorized Photocopy and Duplication Prohibited.
© 2019 MPS. All Rights Reserved.

APPLICATION INFORMATION

COMPONENT SELECTION

Charge Current Setting

The constant charge current (I_{CC}) of the MP2615 can be set by the sense resistor RS1 (see Typical Application). The equation to determine the programmable CC-charge current is expressed as following,

$$I_{CC} = \frac{100mV}{RS1(m\Omega)}(A) \quad (4)$$

To get 2A I_{CC}, a RS1 of 50mΩ should be selected.

Accordingly, the trickle charge current (I_{TC}) can be obtained by the following equation,

$$I_{TC} = 10\% I_{CC} = \frac{10mV}{RS1(m\Omega)}(A) \quad (5)$$

Inductor Selection

To select the right inductor, a trade off should be made between cost, size, and efficiency. An inductor of lower inductance value corresponds with smaller size, but it results in higher ripple currents, higher magnetic hysteretic losses, and higher output capacitances. Conversely, higher inductance value is beneficial to getting a lower ripple current and smaller output filter capacitors, but resulting in higher inductor DC resistance (DCR) loss. Based on practical experience, the inductor ripple current should not exceed 30% of the maximum charge current under worst cases. For the MP2615 with a typical 12V input voltage to charge a 2-cell battery, the maximum inductor current ripple occurs at the corner point between trickle charge and CC charge (V_{BATT} = 6V). Inductance estimations are as follow:

$$L = \frac{V_{IN} - V_{BATT}}{\Delta I_{L_MAX}} \frac{V_{BATT}}{V_{IN} \cdot f_S} \quad (6)$$

Where V_{IN}, V_{BATT}, and f_S are the typical input voltage, the CC charge threshold, and the switching frequency, respectively. And ΔI_{L_MAX} is the maximum inductor ripple current, which is usually 30% of the CC charge current.

$$\Delta I_{L_MAX} = 30\% I_{CC} \quad (7)$$

Based on the condition where I_{CC} = 2A, V_{IN} = 12V, V_{BATT} = 6V and f_s = 760kHz the calculated inductance is 6.6μH. The inductor saturation current must exceed 2.6A at least and have some tolerance. To optimize efficiency, chose an inductor with a DC resistance less than 50mΩ.

NTC Resistor Divider Selection

Figure shows that an internal resistor divider is used to set the low temperature threshold and high temperature threshold at 73.3%·VCC and 29.3%·VCC, respectively. For a given NTC, thermistor, select appropriate R_{T1} and R_{T2} to set the NTC window.

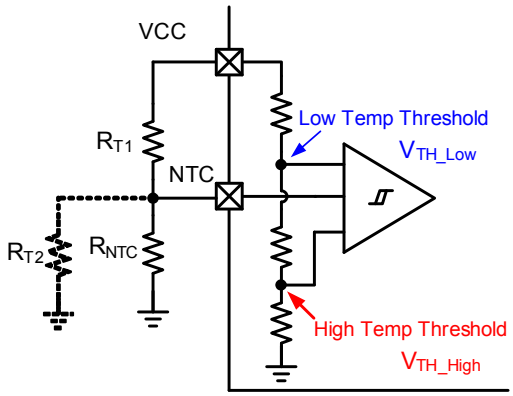

Figure 5: NTC Function Block

The thermistor (NCP18XH103) noted above has the following electrical characteristic:

- At 0°C, R_{NTC_Cold} = 27.445kΩ;
- At 50°C, R_{NTC_Hot} = 4.1601kΩ.

The following equations are derived assuming that the NTC window is between 0°C and 50°C:

$$\frac{R_{T2}//R_{NTC_Cold}}{R_{T1} + R_{T2}//R_{NTC_Cold}} = \frac{V_{TH_Low}}{VREF33} = 73.3\% \quad (8)$$

$$\frac{R_{T2}//R_{NTC_Hot}}{R_{T1} + R_{T2}//R_{NTC_Hot}} = \frac{V_{TH_High}}{VREF33} = 29.3\% \quad (9)$$

According to Equation (8) (9), and the required battery temperature range to calculate R_{T1} and R_{T2}.

Input Capacitor Selection

The input capacitors C1 from the typical application circuit absorbs the maximum ripple current from the buck converter, which is given by:

$$I_{RMS_MAX} = I_{CC} \frac{\sqrt{V_{TC}(V_{IN_MAX} - V_{TC})}}{V_{IN_MAX}} \quad (10)$$

MPS Proprietary Information. Patent Protected. Unauthorized Photocopy and Duplication Prohibited.
© 2019 MPS. All Rights Reserved.

For a given I_{CC} = 2A, V_{TC} = 6V, V_{IN_MAX} = 18V, the maximum ripple current is 1A. Select the input capacitors so that the temperature rise due to the ripple current does not exceed 10°C. Use ceramic capacitors with X5R or X7R dielectrics because of their low ESR and small temperature coefficients. For most applications, use a 22μF capacitor.

Output Capacitor Selection

The output capacitor C2 (see the typical application circuit) is in parallel with the battery. C2 absorbs the high-frequency switching ripple current and smoothes the output voltage. Its impedance must be much less than that of the battery to ensure it absorbs the ripple current. Use a ceramic capacitor because it has lower ESR and smaller size.. The output voltage ripple is given by,

$$\Delta r_O = \frac{\Delta V_O}{V_O} = \frac{1-\frac{V_O}{V_{IN}}}{8C_O f_S^2 L} \quad (11)$$

In order to guarantee ± 0.5% full battery voltage accuracy, the maximum output voltage ripple must not exceed 0.5% (e.g., 0.1%). The maximum output voltage ripple occurs at the minimum battery voltage of the CC charge and the maximum input voltage.

For V_{IN_MAX} = 18V, V_{CC_MIN} = V_{TC} =6V, L = 6.8μH, f_S = 760kHz, Δr_{O_MAX} = 0.1%, the output capacitor can be calculated as,

$$C_O = \frac{1-\frac{V_{TC}}{V_{IN_MAX}}}{8f_s^2 L \Delta r_{O_MAX}} = 21.3\mu F \quad (12)$$

We can then approximate this value and choose a 22μF ceramic capacitor.

PCB Layout Guide

PCB layout is important to meet specified noise, efficiency and stability requirements. The following design considerations can improve circuit performance,

1) Route the power stage adjacent to the grounds. Aim to minimize the high-side switching node (SW, inductor), trace lengths in the high-current paths and the current-sense resistor trace. Keep the switching node short and away from the feedback network.
2) Connect the charge current sense resistor to CSP (pin 10), BATT (pin 9). Minimize the length and area of this circuit loop.
3) Place the input capacitor as close as possible to the VIN and PGND pins. Place the output inductor close to the IC as and connect the output capacitor between the inductor and PGND of the IC. This minimizes the current path loop area from the SW pin through the LC filter and back to the PGND pin.
4) Connect AGND and PGND at a single point.
5) Figure 6 is a PCB layout reference design.

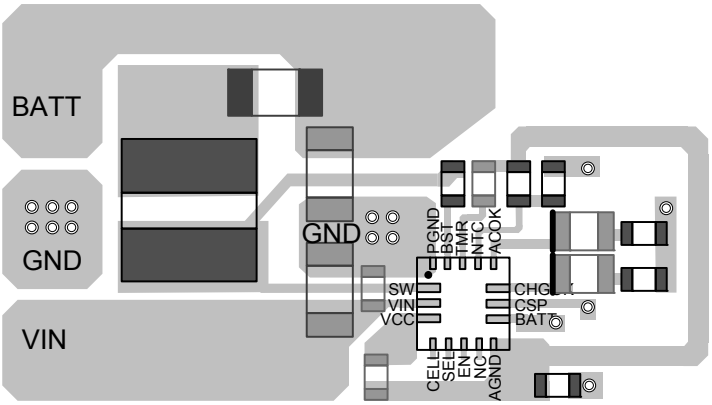

Figure 6: MP2615 PCB Guild Design

MPS Proprietary Information. Patent Protected. Unauthorized Photocopy and Duplication Prohibited.
© 2019 MPS. All Rights Reserved.

TYPICAL APPLICATION CIRCUITS

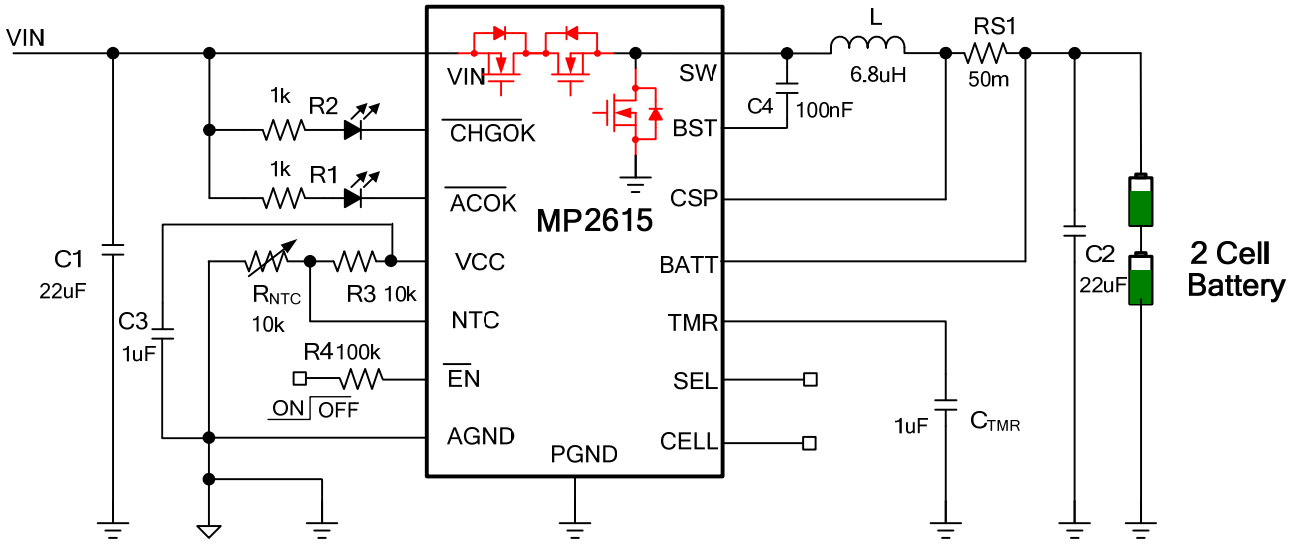

Figure 7: Typical Application Circuit to Charge a 2 Cell Battery with 12V$_{IN}$.

MPS Proprietary Information. Patent Protected. Unauthorized Photocopy and Duplication Prohibited.
© 2019 MPS. All Rights Reserved.

PACKAGE INFORMATION

QFN-16 (3mmX3mm)

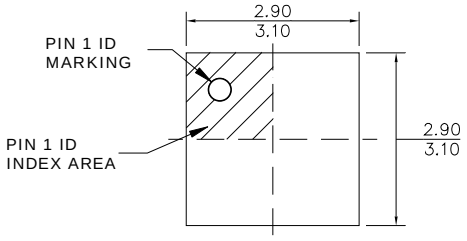

TOP VIEW

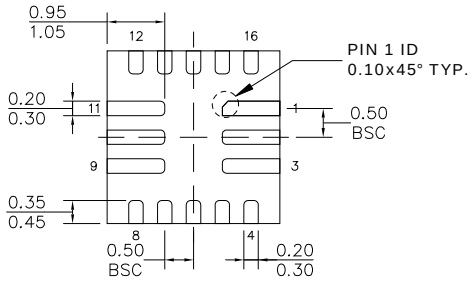

BOTTOM VIEW

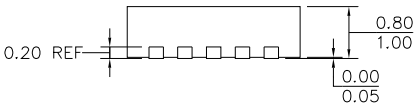

SIDE VIEW

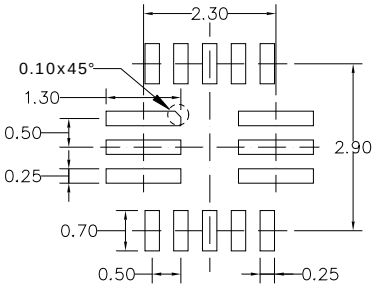

RECOMMENDED LAND PATTERN

NOTE:

1) ALL DIMENSIONS ARE IN MILLIMETERS.
2) EXPOSED PADDLE SIZE DOES NOT INCLUDE MOLD FLASH.
3) LEAD COPLANARITY SHALL BE 0.10 MILLIMETERS MAX.
4) JEDEC REFERENCE IS MO-220.
5) DRAWING IS NOT TO SCALE.

NOTICE: The information in this document is subject to change without notice. Please contact MPS for current specifications. Users should warrant and guarantee that third party Intellectual Property rights are not infringed upon when integrating MPS products into any application. MPS will not assume any legal responsibility for any said applications.

MPS Proprietary Information. Patent Protected. Unauthorized Photocopy and Duplication Prohibited.
© 2019 MPS. All Rights Reserved.