SDLS193 – MARCH 1974 – REVISED MARCH 1988

- **Separate Read/Write Addressing Permits Simultaneous Reading and Writing**
- **Fast Access Times . . . Typically 20 ns**
- **Organized as 4 Words of 4 Bits**
- **Expandable to 512 Words of n-Bits**
- **For Use as:**
  - **Scratch-Pad Memory**
  - **Buffer Storage between Processors**
  - **Bit Storage in Fast Multiplication Designs**
- **3-State Outputs**
- **SN54LS170 and SN74LS170 Are Similar But Have Open-Collector Outputs**

SN54LS670 . . . J OR W PACKAGE
SN74LS670 . . . D OR N PACKAGE
(TOP VIEW)

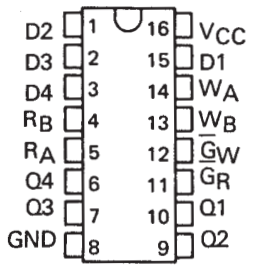

SN54LS670 . . . FK PACKAGE
(TOP VIEW)

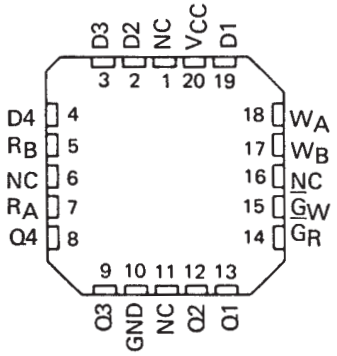

NC — No internal connection.

description

The SN54LS670 and SN74LS670 MSI 16-bit TTL register files incorporate the equivalent of 98 gates. The register file is organized as 4 words of 4 bits each and separate on-chip decoding is provided for addressing the four word locations to either write-in or retrieve data. This permits simultaneous writing into one location and reading from another word location.

Four data inputs are available which are used to supply the 4-bit word to be stored. Location of the word is determined by the write-address inputs A and B in conjunction with a write-enable signal. Data applied at the inputs should be in its true form. That is, if a high-level signal is desired from the output, a high-level is applied at the data input for that particular bit location. The latch inputs are arranged so that new data will be accepted only if both internal address gate inputs are high. When this condition exists, data at the D input is transferred to the latch output. When the write-enable input, $\overline{G}_W$, is high, the data inputs are inhibited and their levels can cause no change in the information stored in the internal latches. When the read-enable input, $\overline{G}_R$, is high, the data outputs are inhibited and go into the high-impedance state.

The individual address lines permit direct acquisition of data stored in any four of the latches. Four individual decoding gates are used to complete the address for reading a word. When the read address is made in conjunction with the read-enable signal, the word appears at the four outputs.

This arrangement—data-entry addressing separate from data-read addressing and individual sense line—eliminates recovery times, permits simultaneous reading and writing, and is limited in speed only by the write time (27 nanoseconds typical) and the read time (24 nanoseconds typical). The register file has a nondestructive readout in that data is not lost when addressed.

All inputs except read enable and write enable are buffered to lower the drive requirements to one Series 54LS/74LS standard load, and input-clamping diodes minimize switching transients to simplify system design. High-speed, double-ended AND-OR-INVERT gates are employed for the read-address function and have high-sink-current, three-state outputs. Up to 128 of these outputs may be bus connected for increasing the capacity up to 512 words. Any number of these registers may be paralleled to provide n-bit word length.

The SN54LS670 is characterized for operation over the full military temperature range of −55° C to 125° C; the SN74LS670 is characterized for operation from 0° C to 70° C.

PRODUCTION DATA information is current as of publication date. Products conform to specifications per the terms of Texas Instruments standard warranty. Production processing does not necessarily include testing of all parameters.

Copyright © 1988, Texas Instruments Incorporated

logic symbol†

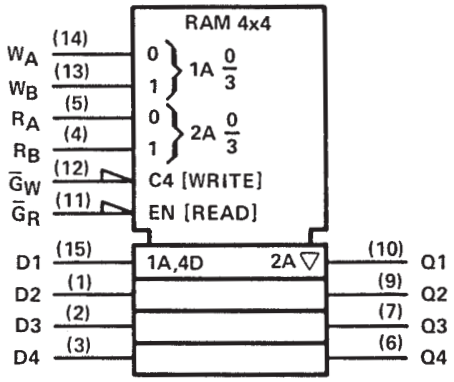

†This symbol is in accordance with ANSI/IEEE Std. 91-1984 and IEC Publication 617-12.
Pin numbers shown are for D, J, N, and W packages.

WRITE FUNCTION TABLE (SEE NOTES A, B, AND C)

WRITE INPUTS			WORD			
W_B	W_A	$\overline{G}_W$	0	1	2	3
L	L	L	Q = D	Q_0	Q_0	Q_0
L	H	L	Q_0	Q = D	Q_0	Q_0
H	L	L	Q_0	Q_0	Q = D	Q_0
H	H	L	Q_0	Q_0	Q_0	Q = D
X	X	H	Q_0	Q_0	Q_0	Q_0

READ FUNCTION TABLE (SEE NOTES A AND D)

READ INPUTS			OUTPUTS			
R_B	R_A	$\overline{G}_R$	Q1	Q2	Q3	Q4
L	L	L	W0B1	W0B2	W0B3	W0B4
L	H	L	W1B1	W1B2	W1B3	W1B4
H	L	L	W2B1	W2B2	W2B3	W2B4
H	H	L	W3B1	W3B2	W3B3	W3B4
X	X	H	Z	Z	Z	Z

NOTES: A. H = high level, L = low level, X = irrelevant, Z = high impedance (off)
B. (Q = D) = The four selected internal flip-flop outputs will assume the states applied to the four external data inputs.
C. Q_0 = the level of Q before the indicated input conditions were established.
D. W0B1 = The first bit of word 0, etc.

schematics of inputs and outputs

EQUIVALENT OF EACH INPUT

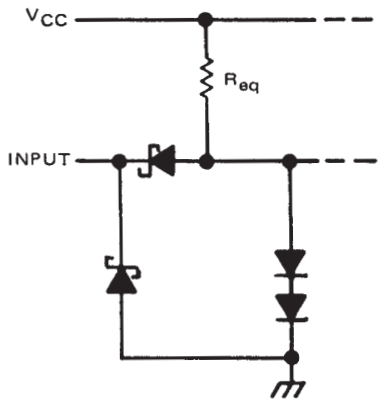

Any D, R, or W: R_{eq} = 20 kΩ NOM
G_R: R_{eq} = 6.67 kΩ NOM
G_W: R_{eq} = 10 kΩ NOM

TYPICAL OF ALL OUTPUTS

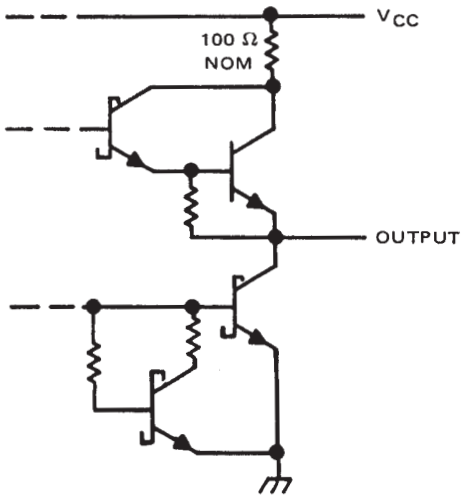

logic diagram (positive logic)

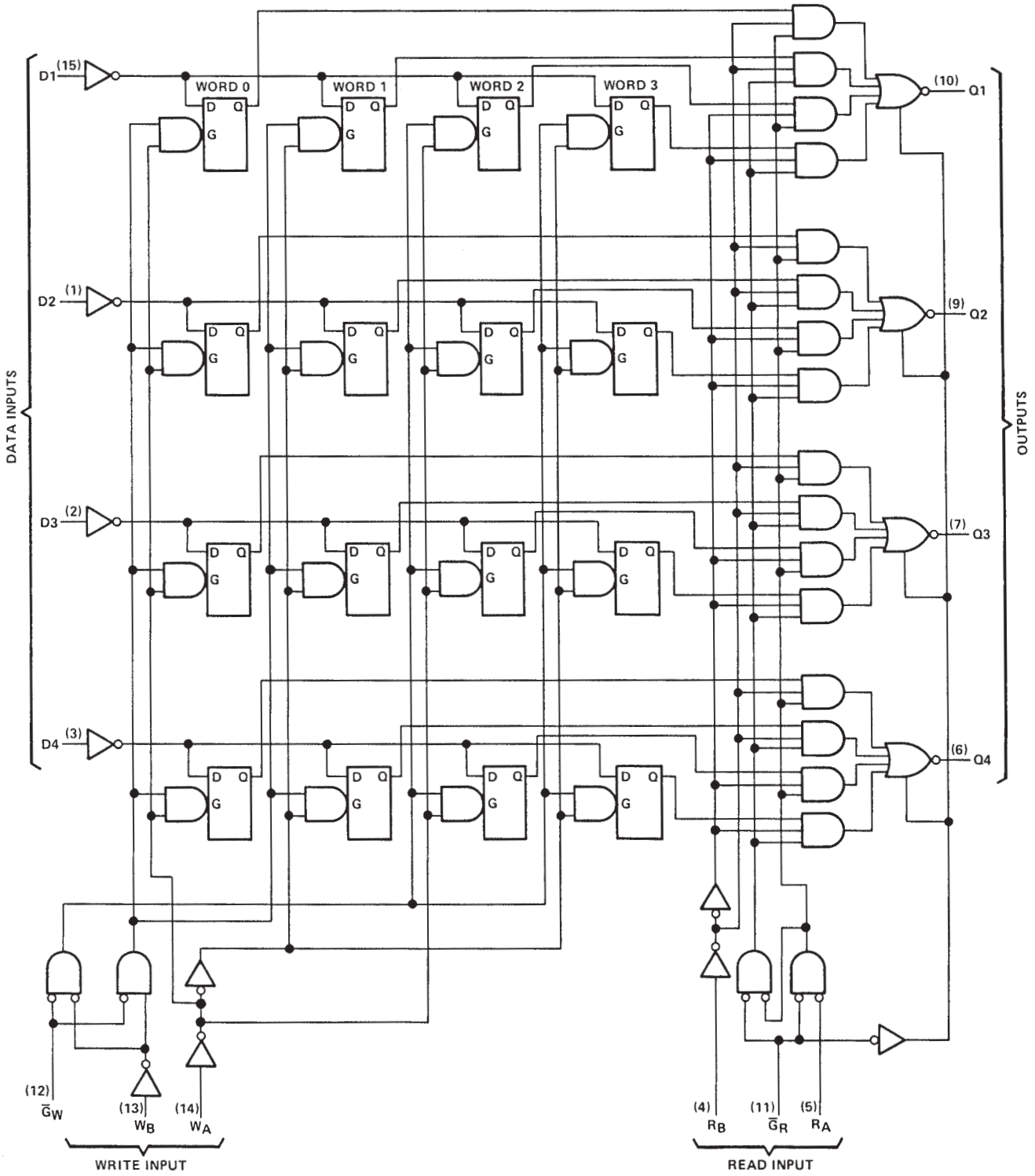

Pin numbers shown are for D, J, N, and W packages.

absolute maximum ratings over operating free-air temperature range (unless otherwise noted)

Supply voltage, V_{CC} (see Note 1)	7 V
Input voltage	7 V
Off-state output voltage	5.5 V
Operating free-air temperature range: SN54LS670	–55°C to 125°C
SN74LS670	0°C to 70°C
Storage temperature range	–65°C to 150°C

recommended operating conditions

		SN54LS670			SN74LS670			UNIT
		MIN	NOM	MAX	MIN	NOM	MAX	
Supply voltage, V_{CC}		4.5	5	5.5	4.75	5	5.25	V
High-level output current, I_{OH}				–1			–2.6	mA
Low-level output current, I_{OL}				4			8	mA
Width of write-enable or read-enable pulse, t_w		25			25			ns
Setup times, high- or low-level data (see Figure 2)	Data input with respect to write enable, $t_{su(D)}$	10			10			ns
	Write select with respect to write enable, $t_{su(W)}$	15			15			ns
Hold times, high- or low-level data (see Note 2 and Figure 2)	Data input with respect to write enable, $t_{h(D)}$	15			15			ns
	Write select with respect to write enable, $t_{h(W)}$	5			5			ns
Latch time for new data, t_{latch} (see Note 3)		25			25			ns
Operating free-air temperature range, T_A		–55		125	0		70	°C

NOTES: 1. Voltage values are with respect to network ground terminal.

2. Write-select setup time will protect the data written into the previous address. If protection of data in the previous address is not required, $t_{su(W)}$ can be ignored as any address selection sustained for the final 30 ns of the write-enable pulse and during $t_{h(W)}$ will result in data being written into that location. Depending on the duration of the input conditions, one or a number of previous addresses may have been written into.

3. Latch time is the time allowed for the internal output of the latch to assume the state of new data. See Figure 2. This is important only when attempting to read from a location immediately after that location has received new data.

electrical characteristics over recommended operating free-air temperature range (unless otherwise noted)

PARAMETER		TEST CONDITIONS†			SN54LS670 MIN	SN54LS670 TYP‡	SN54LS670 MAX	SN74LS670 MIN	SN74LS670 TYP‡	SN74LS670 MAX	UNIT
V_{IH}	High-level input voltage				2			2			V
V_{IL}	Low-level input voltage						0.7			0.8	V
V_{IK}	Input clamp voltage	V_{CC} = MIN,	I_I = −18 mA				−1.5			−1.5	V
V_{OH}	High-level output voltage	V_{CC} = MIN, $V_{IL} = V_{IL}$ max	V_{IH} = 2 V,	I_{OH} = −1 mA	2.4	3.4					V
				I_{OH} = −2.6 mA				2.4	3.1		
V_{OL}	Low-level output voltage	V_{CC} = MIN, $V_{IL} = V_{IL}$ max	V_{IH} = 2 V,	I_{OL} = 4 mA		0.25	0.4		0.25	0.4	V
				I_{OL} = 8 mA					0.35	0.5	
I_{OZH}	Off-state output current, high-level voltage applied	V_{CC} = MAX,	V_{IH} = 2 V,	V_O = 2.7 V			20			20	μA
I_{OZL}	Off-state output current, low-level voltage applied	V_{CC} = MAX,	V_{IH} = 2 V,	V_O = 0.4 V			−20			−20	μA
I_I	Input current at maximum input voltage	V_{CC} = MAX, V_I = 7 V	Any D, R, or W				0.1			0.1	mA
			$\overline{G}_W$				0.2			0.2	
			$\overline{G}_R$				0.3			0.3	
I_{IH}	High-level input current	V_{CC} = MAX, V_I = 2.7 V	Any D, R, or W				20			20	μA
			$\overline{G}_W$				40			40	
			$\overline{G}_R$				60			60	
I_{IL}	Low-level input current	V_{CC} = MAX, V_I = 0.4 V	Any D, R, or W				−0.4			−0.4	mA
			$\overline{G}_W$				−0.8			−0.8	
			$\overline{G}_R$				−1.2			−1.2	
I_{OS}	Short-circuit output current§	V_{CC} = MAX			−30		−130	−30		−130	mA
I_{CC}	Supply current	V_{CC} = MAX,	See Note 4			30	50		30	50	mA

†For conditions shown as MIN or MAX, use the appropriate value specified under recommended operating conditions.
‡All typical values are at V_{CC} = 5 V, T_A = 25°C.
§Not more than one output should be shorted at a time, and duration of the short-circuit should not exceed one second.
NOTE 4: Maximum I_{CC} is guaranteed for the following worst-case conditions: 4.5 V is applied to all data inputs and both enable inputs, all address inputs are grounded and all outputs are open.

switching characteristics, V_{CC} = 5 V, T_A = 25°C

PARAMETER	FROM (INPUT)	TO (OUTPUT)	TEST CONDITIONS	MIN	TYP	MAX	UNIT
t_{PLH}	Read select	Any Q	C_L = 15 pF, R_L = 2 kΩ, See Figures 1 and 2		23	40	ns
t_{PHL}					25	45	
t_{PLH}	Write enable	Any Q	C_L = 15 pF, R_L = 2 kΩ, See Figures 1 and 3		26	45	ns
t_{PHL}					28	50	
t_{PLH}	Data	Any Q			25	45	ns
t_{PHL}					23	40	
t_{PZH}	Read enable	Any Q	C_L = 15 pF, R_L = 2 kΩ, See Figures 1 and 4		15	35	ns
t_{PZL}					22	40	
t_{PHZ}			C_L = 5 pF, R_L = 2 kΩ, See Figures 1 and 4		30	50	ns
t_{PLZ}					16	35	

PARAMETER MEASUREMENT INFORMATION

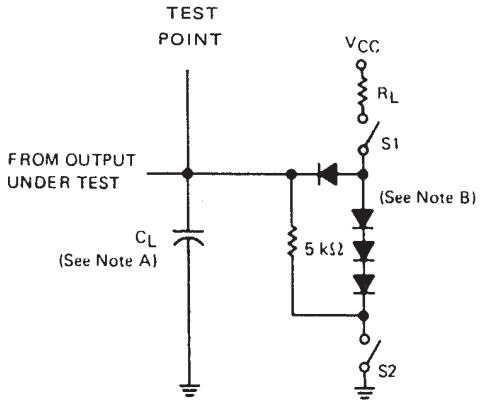

NOTES: A. C_L includes probe and jig capacitance.
B. All diodes are 1N3064 or equivalent.

LOAD CIRCUIT

FIGURE 1

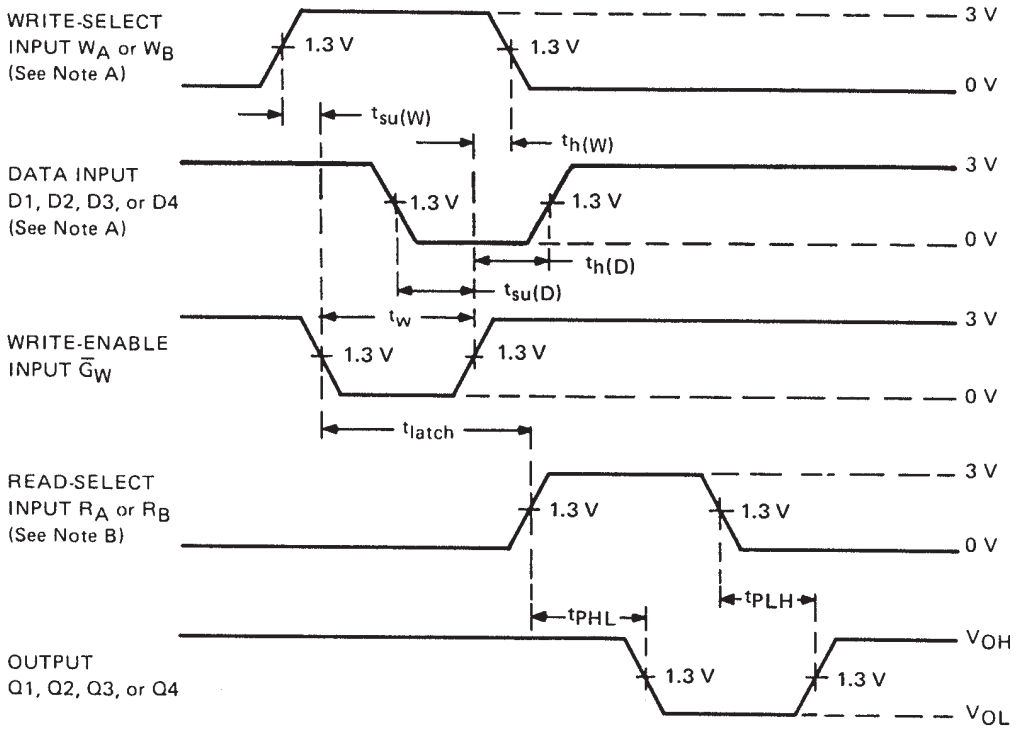

VOLTAGE WAVEFORMS (S1 AND S2 ARE CLOSED)

NOTES: A. High-level input pulses at the select and data inputs are illustrated; however, times associated with low-level pulses are measured from the same reference points.
B. When measuring delay times from a read-select input, the read-enable input is low.
C. Input waveforms are supplied by generators having the following characteristics: PRR ≤ 2 MHz, $Z_{out} \approx 50\ \Omega$, duty cycle ≤ 50%, $t_r \leq 15$ ns, $t_f \leq 6$ ns.

FIGURE 2

PARAMETER MEASUREMENT INFORMATION

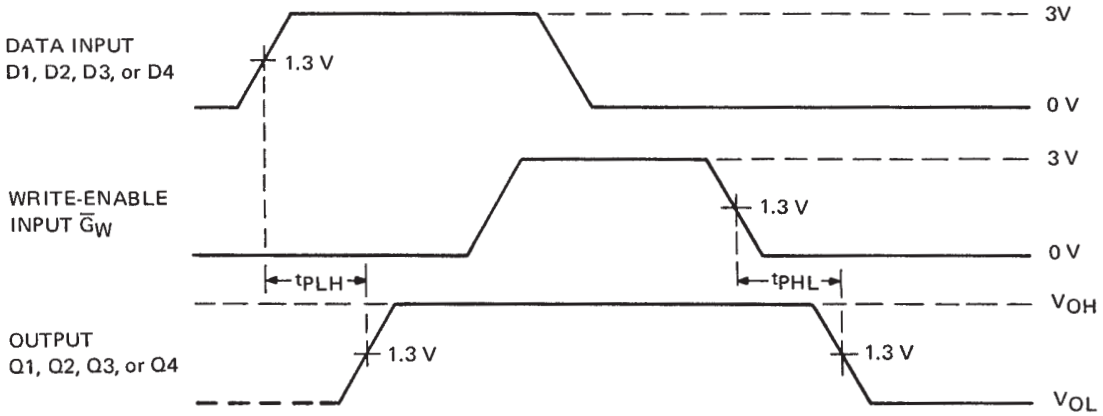

VOLTAGE WAVEFORM 1 (S1 AND S2 ARE CLOSED)

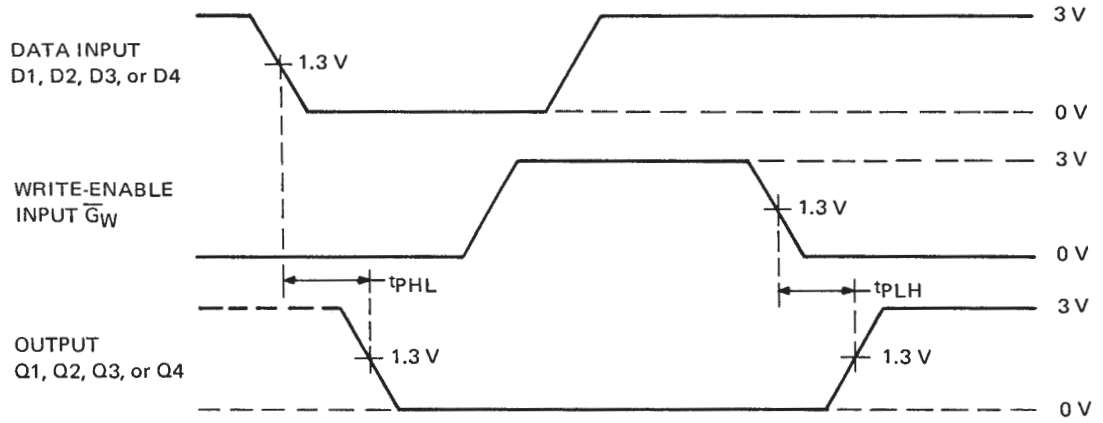

VOLTAGE WAVEFORM 2 (S1 AND S2 ARE CLOSED)

NOTES: A. Each select address is tested. Prior to the start of each of the above tests both write and read address inputs are stabilized with $W_A = R_A$ and $W_B = R_B$. During the test G_R is low.

B. Input waveforms are supplied by generators having the following characteristics: PRR ≤ 1 MHz, $Z_{out} \approx 50\ \Omega$, duty cycle ≤ 50%, $t_r \leq 15$ ns, $t_r \leq 6$ ns.

FIGURE 3

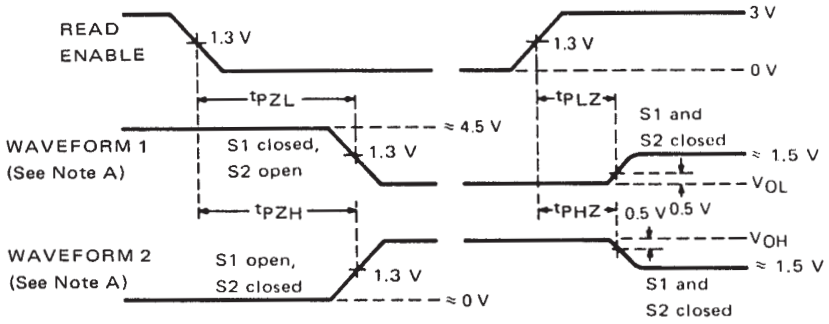

VOLTAGE WAVEFORMS
ENABLE AND DISABLE TIMES, THREE-STATE OUTPUTS

NOTES: A. Waveforms 1 is for an output with internal conditions such that the output is low except when disabled by the read-enable input. Waveform 2 is for an output with internal conditions such that the output is high except when disabled by the read-enable input.

B. When measuring delay times from the read-enable input, both read-select inputs have been established at steady states.

C. Input waveforms are supplied by generators having the following characteristics: PRR ≤ 1 MHz, $Z_{out} \approx 50\ \Omega$, duty cycle ≤ 50%, $t_r \leq 15$ ns, $t_r \leq 6$ ns.

FIGURE 4

PACKAGING INFORMATION

Orderable part number	Status (1)	Material type (2)	Package | Pins	Package qty | Carrier	RoHS (3)	Lead finish/ Ball material (4)	MSL rating/ Peak reflow (5)	Op temp (°C)	Part marking (6)
7704201EA	Active	Production	CDIP (J) | 16	25 | TUBE	No	SNPB	N/A for Pkg Type	-55 to 125	7704201EA SNJ54LS670J
7704201FA	Active	Production	CFP (W) | 16	25 | TUBE	No	SNPB	N/A for Pkg Type	-55 to 125	7704201FA SNJ54LS670W
7704201FA	Active	Production	CFP (W) | 16	25 | TUBE	No	SNPB	N/A for Pkg Type	-55 to 125	7704201FA SNJ54LS670W
SN54LS670J	Active	Production	CDIP (J) | 16	25 | TUBE	No	SNPB	N/A for Pkg Type	-55 to 125	SN54LS670J
SN54LS670J	Active	Production	CDIP (J) | 16	25 | TUBE	No	SNPB	N/A for Pkg Type	-55 to 125	SN54LS670J
SN54LS670J.A	Active	Production	CDIP (J) | 16	25 | TUBE	No	SNPB	N/A for Pkg Type	-55 to 125	SN54LS670J
SN54LS670J.A	Active	Production	CDIP (J) | 16	25 | TUBE	No	SNPB	N/A for Pkg Type	-55 to 125	SN54LS670J
SN74LS670D	Active	Production	SOIC (D) | 16	40 | TUBE	Yes	NIPDAU	Level-1-260C-UNLIM	0 to 70	LS670
SN74LS670D	Active	Production	SOIC (D) | 16	40 | TUBE	Yes	NIPDAU	Level-1-260C-UNLIM	0 to 70	LS670
SN74LS670D.A	Active	Production	SOIC (D) | 16	40 | TUBE	Yes	NIPDAU	Level-1-260C-UNLIM	0 to 70	LS670
SN74LS670D.A	Active	Production	SOIC (D) | 16	40 | TUBE	Yes	NIPDAU	Level-1-260C-UNLIM	0 to 70	LS670
SN74LS670N	Active	Production	PDIP (N) | 16	25 | TUBE	Yes	NIPDAU	N/A for Pkg Type	0 to 70	SN74LS670N
SN74LS670N	Active	Production	PDIP (N) | 16	25 | TUBE	Yes	NIPDAU	N/A for Pkg Type	0 to 70	SN74LS670N
SN74LS670N.A	Active	Production	PDIP (N) | 16	25 | TUBE	Yes	NIPDAU	N/A for Pkg Type	0 to 70	SN74LS670N
SN74LS670N.A	Active	Production	PDIP (N) | 16	25 | TUBE	Yes	NIPDAU	N/A for Pkg Type	0 to 70	SN74LS670N
SN74LS670NSR	Active	Production	SOP (NS) | 16	2000 | LARGE T&R	Yes	NIPDAU	Level-1-260C-UNLIM	0 to 70	74LS670
SN74LS670NSR	Active	Production	SOP (NS) | 16	2000 | LARGE T&R	Yes	NIPDAU	Level-1-260C-UNLIM	0 to 70	74LS670
SN74LS670NSR.A	Active	Production	SOP (NS) | 16	2000 | LARGE T&R	Yes	NIPDAU	Level-1-260C-UNLIM	0 to 70	74LS670
SN74LS670NSR.A	Active	Production	SOP (NS) | 16	2000 | LARGE T&R	Yes	NIPDAU	Level-1-260C-UNLIM	0 to 70	74LS670
SNJ54LS670FK	Active	Production	LCCC (FK) | 20	55 | TUBE	No	SNPB	N/A for Pkg Type	-55 to 125	SNJ54LS 670FK
SNJ54LS670FK	Active	Production	LCCC (FK) | 20	55 | TUBE	No	SNPB	N/A for Pkg Type	-55 to 125	SNJ54LS 670FK
SNJ54LS670FK.A	Active	Production	LCCC (FK) | 20	55 | TUBE	No	SNPB	N/A for Pkg Type	-55 to 125	SNJ54LS 670FK
SNJ54LS670FK.A	Active	Production	LCCC (FK) | 20	55 | TUBE	No	SNPB	N/A for Pkg Type	-55 to 125	SNJ54LS 670FK

Orderable part number	Status (1)	Material type (2)	Package | Pins	Package qty | Carrier	RoHS (3)	Lead finish/ Ball material (4)	MSL rating/ Peak reflow (5)	Op temp (°C)	Part marking (6)
SNJ54LS670J	Active	Production	CDIP (J) | 16	25 | TUBE	No	SNPB	N/A for Pkg Type	-55 to 125	7704201EA SNJ54LS670J
SNJ54LS670J	Active	Production	CDIP (J) | 16	25 | TUBE	No	SNPB	N/A for Pkg Type	-55 to 125	7704201EA SNJ54LS670J
SNJ54LS670J.A	Active	Production	CDIP (J) | 16	25 | TUBE	No	SNPB	N/A for Pkg Type	-55 to 125	7704201EA SNJ54LS670J
SNJ54LS670J.A	Active	Production	CDIP (J) | 16	25 | TUBE	No	SNPB	N/A for Pkg Type	-55 to 125	7704201EA SNJ54LS670J
SNJ54LS670W	Active	Production	CFP (W) | 16	25 | TUBE	No	SNPB	N/A for Pkg Type	-55 to 125	7704201FA SNJ54LS670W
SNJ54LS670W	Active	Production	CFP (W) | 16	25 | TUBE	No	SNPB	N/A for Pkg Type	-55 to 125	7704201FA SNJ54LS670W
SNJ54LS670W.A	Active	Production	CFP (W) | 16	25 | TUBE	No	SNPB	N/A for Pkg Type	-55 to 125	7704201FA SNJ54LS670W
SNJ54LS670W.A	Active	Production	CFP (W) | 16	25 | TUBE	No	SNPB	N/A for Pkg Type	-55 to 125	7704201FA SNJ54LS670W

(1) **Status:** For more details on status, see our product life cycle.

(2) **Material type:** When designated, preproduction parts are prototypes/experimental devices, and are not yet approved or released for full production. Testing and final process, including without limitation quality assurance, reliability performance testing, and/or process qualification, may not yet be complete, and this item is subject to further changes or possible discontinuation. If available for ordering, purchases will be subject to an additional waiver at checkout, and are intended for early internal evaluation purposes only. These items are sold without warranties of any kind.

(3) **RoHS values:** Yes, No, RoHS Exempt. See the TI RoHS Statement for additional information and value definition.

(4) **Lead finish/Ball material:** Parts may have multiple material finish options. Finish options are separated by a vertical ruled line. Lead finish/Ball material values may wrap to two lines if the finish value exceeds the maximum column width.

(5) **MSL rating/Peak reflow:** The moisture sensitivity level ratings and peak solder (reflow) temperatures. In the event that a part has multiple moisture sensitivity ratings, only the lowest level per JEDEC standards is shown. Refer to the shipping label for the actual reflow temperature that will be used to mount the part to the printed circuit board.

(6) **Part marking:** There may be an additional marking, which relates to the logo, the lot trace code information, or the environmental category of the part.

Multiple part markings will be inside parentheses. Only one part marking contained in parentheses and separated by a "~" will appear on a part. If a line is indented then it is a continuation of the previous line and the two combined represent the entire part marking for that device.

Important Information and Disclaimer: The information provided on this page represents TI's knowledge and belief as of the date that it is provided. TI bases its knowledge and belief on information provided by third parties, and makes no representation or warranty as to the accuracy of such information. Efforts are underway to better integrate information from third parties. TI has taken and continues to take reasonable steps to provide representative and accurate information but may not have conducted destructive testing or chemical analysis on incoming materials and chemicals. TI and TI suppliers consider certain information to be proprietary, and thus CAS numbers and other limited information may not be available for release.

In no event shall TI's liability arising out of such information exceed the total purchase price of the TI part(s) at issue in this document sold by TI to Customer on an annual basis.

OTHER QUALIFIED VERSIONS OF SN54LS670, SN74LS670 :

- Catalog : SN74LS670
- Military : SN54LS670

NOTE: Qualified Version Definitions:

- Catalog - TI's standard catalog product
- Military - QML certified for Military and Defense Applications

TAPE AND REEL INFORMATION

REEL DIMENSIONS

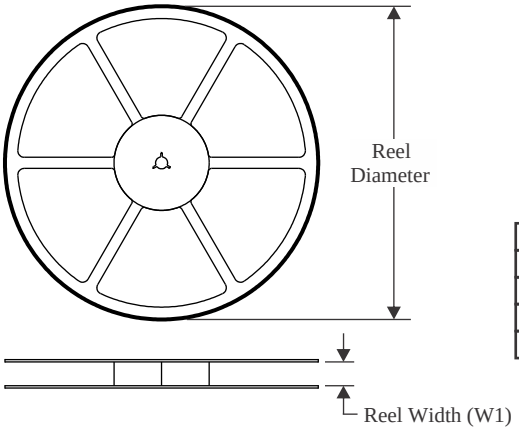

TAPE DIMENSIONS

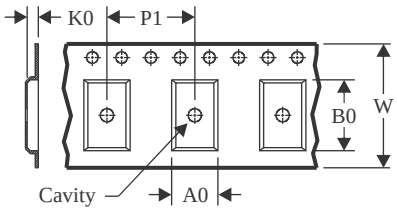

A0	Dimension designed to accommodate the component width
B0	Dimension designed to accommodate the component length
K0	Dimension designed to accommodate the component thickness
W	Overall width of the carrier tape
P1	Pitch between successive cavity centers

QUADRANT ASSIGNMENTS FOR PIN 1 ORIENTATION IN TAPE

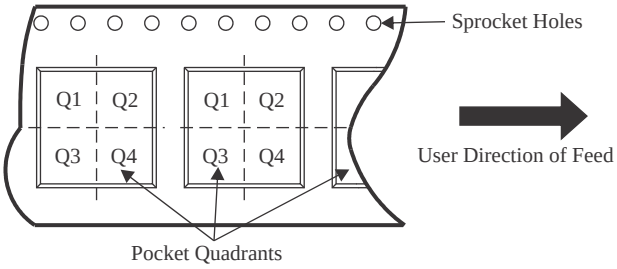

*All dimensions are nominal

Device	Package Type	Package Drawing	Pins	SPQ	Reel Diameter (mm)	Reel Width W1 (mm)	A0 (mm)	B0 (mm)	K0 (mm)	P1 (mm)	W (mm)	Pin1 Quadrant
SN74LS670NSR	SOP	NS	16	2000	330.0	16.4	8.2	10.5	2.5	12.0	16.0	Q1

TAPE AND REEL BOX DIMENSIONS

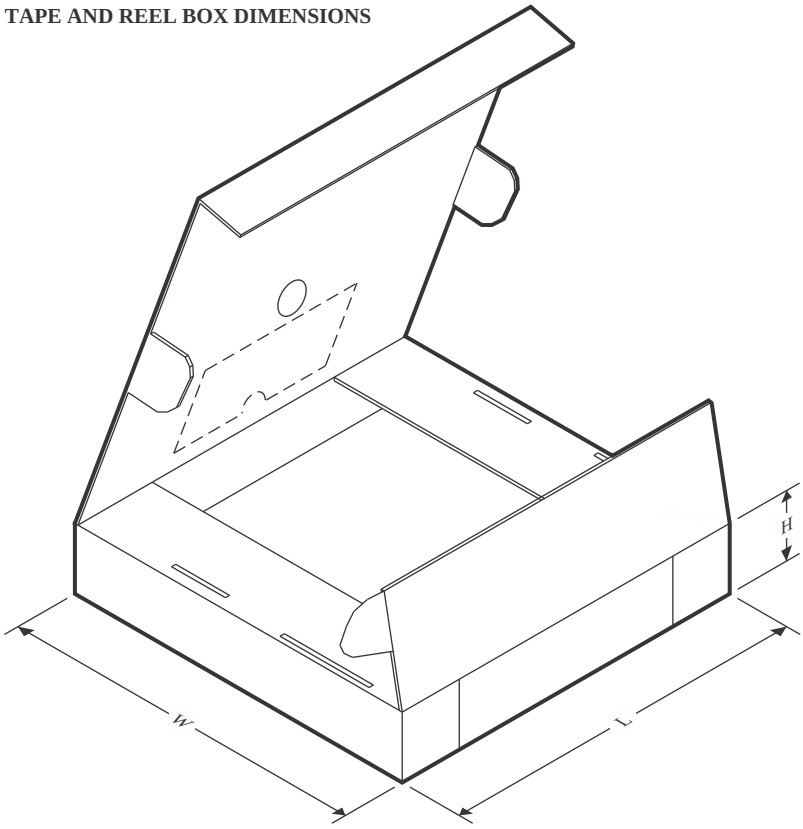

*All dimensions are nominal

Device	Package Type	Package Drawing	Pins	SPQ	Length (mm)	Width (mm)	Height (mm)
SN74LS670NSR	SOP	NS	16	2000	356.0	356.0	35.0

TUBE

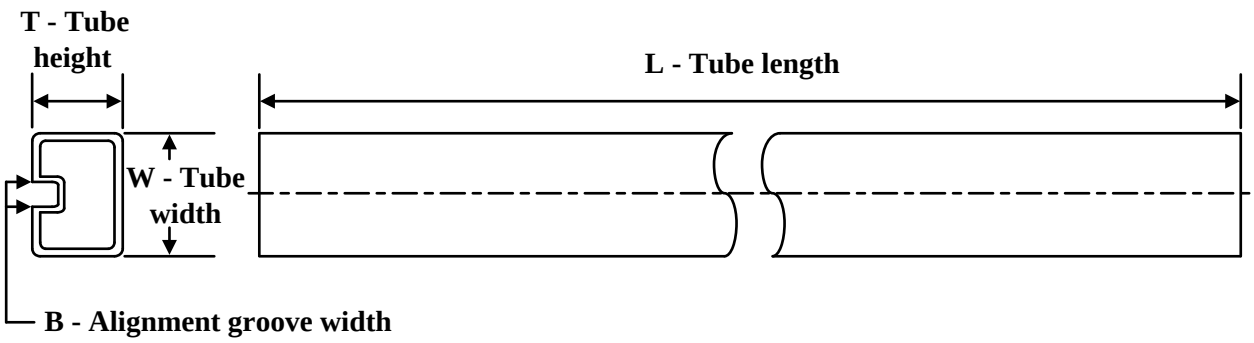

*All dimensions are nominal

Device	Package Name	Package Type	Pins	SPQ	L (mm)	W (mm)	T (µm)	B (mm)
7704201FA	W	CFP	16	25	506.98	26.16	6220	NA
SN74LS670D	D	SOIC	16	40	507	8	3940	4.32
SN74LS670D.A	D	SOIC	16	40	507	8	3940	4.32
SN74LS670N	N	PDIP	16	25	506	13.97	11230	4.32
SN74LS670N	N	PDIP	16	25	506	13.97	11230	4.32
SN74LS670N.A	N	PDIP	16	25	506	13.97	11230	4.32
SN74LS670N.A	N	PDIP	16	25	506	13.97	11230	4.32
SNJ54LS670FK	FK	LCCC	20	55	506.98	12.06	2030	NA
SNJ54LS670FK.A	FK	LCCC	20	55	506.98	12.06	2030	NA
SNJ54LS670W	W	CFP	16	25	506.98	26.16	6220	NA
SNJ54LS670W.A	W	CFP	16	25	506.98	26.16	6220	NA

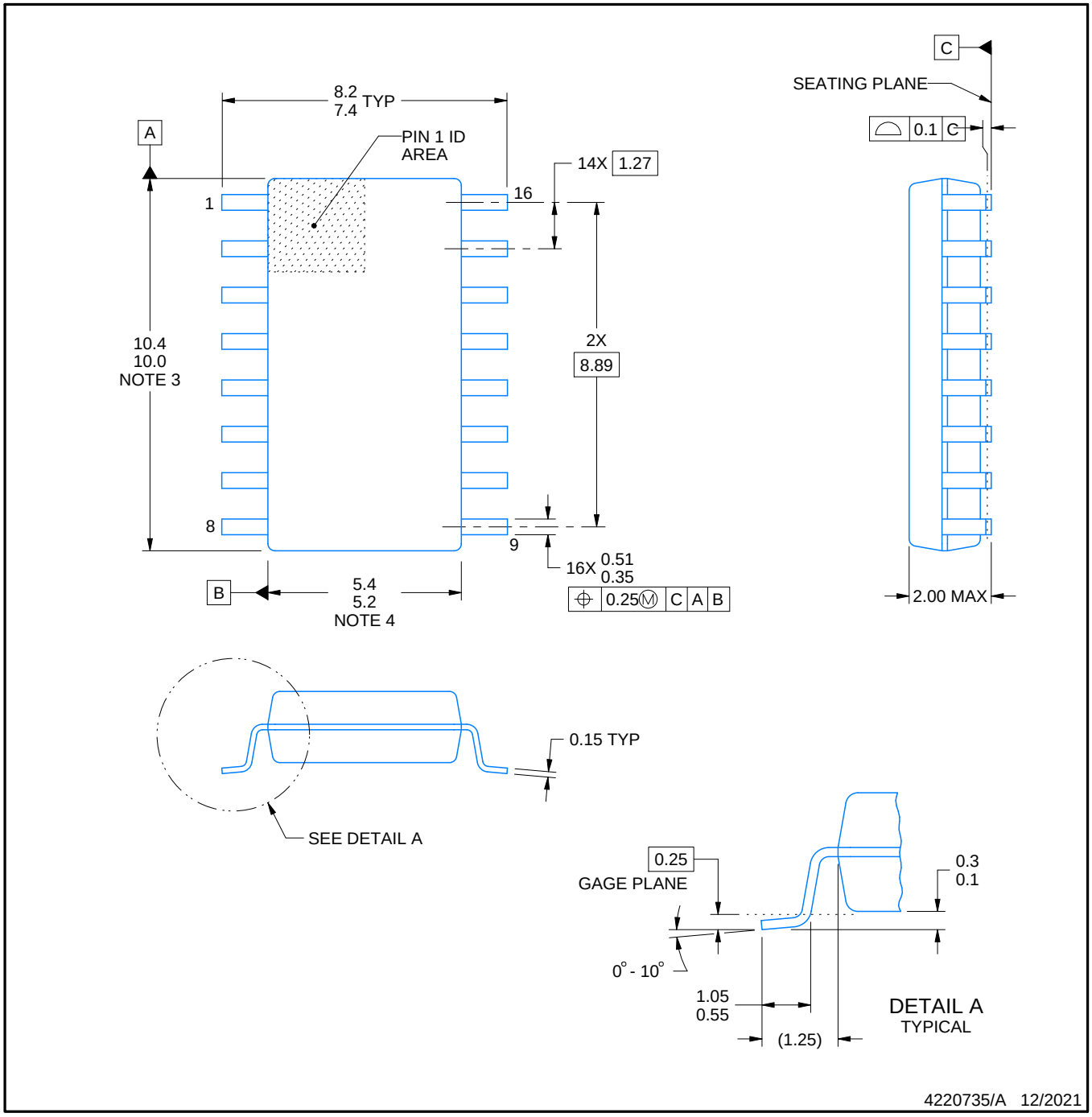

NOTES:

1. All linear dimensions are in millimeters. Dimensions in parenthesis are for reference only. Dimensioning and tolerancing per ASME Y14.5M.
2. This drawing is subject to change without notice.
3. This dimension does not include mold flash, protrusions, or gate burrs. Mold flash, protrusions, or gate burrs shall not exceed 0.15 mm, per side.
4. This dimension does not include interlead flash. Interlead flash shall not exceed 0.25 mm, per side.

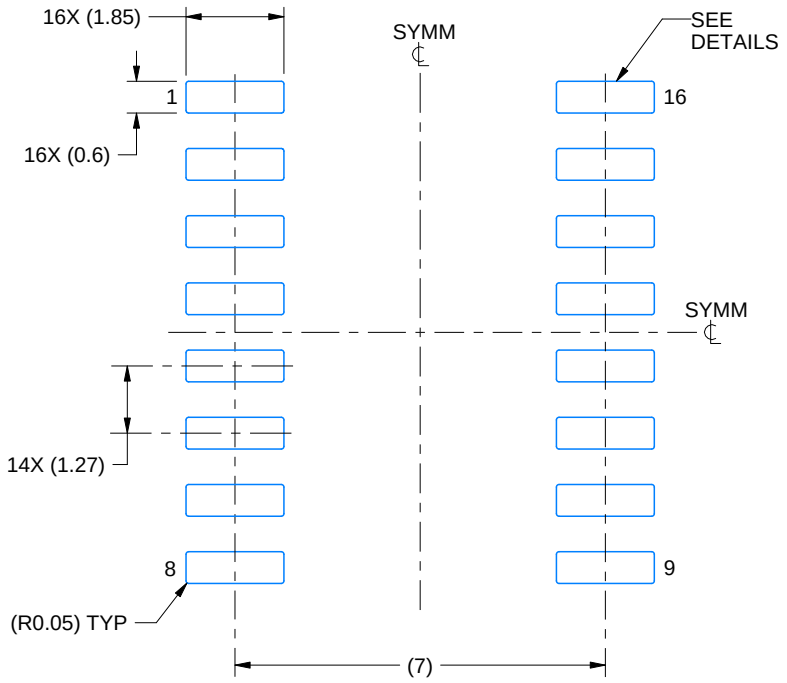

LAND PATTERN EXAMPLE
SCALE:7X

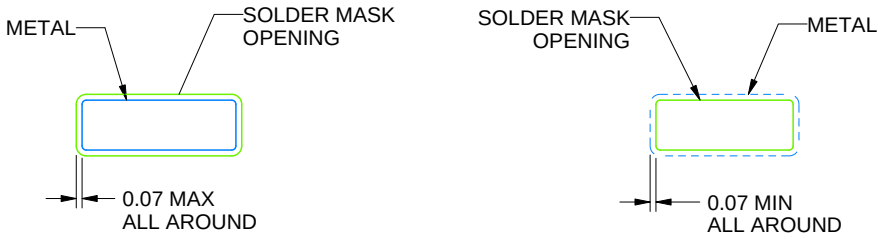

NON SOLDER MASK DEFINED

SOLDER MASK DEFINED

SOLDER MASK DETAILS

4220735/A 12/2021

NOTES: (continued)

5. Publication IPC-7351 may have alternate designs.
6. Solder mask tolerances between and around signal pads can vary based on board fabrication site.

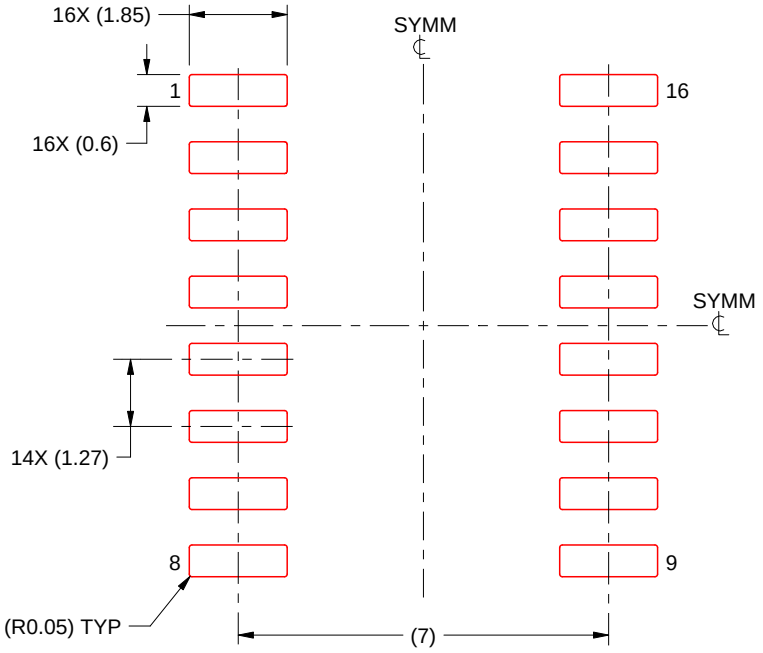

SOLDER PASTE EXAMPLE
BASED ON 0.125 mm THICK STENCIL
SCALE:7X

4220735/A 12/2021

NOTES: (continued)

7. Laser cutting apertures with trapezoidal walls and rounded corners may offer better paste release. IPC-7525 may have alternate design recommendations.
8. Board assembly site may have different recommendations for stencil design.

D (R–PDSO–G16) PLASTIC SMALL OUTLINE

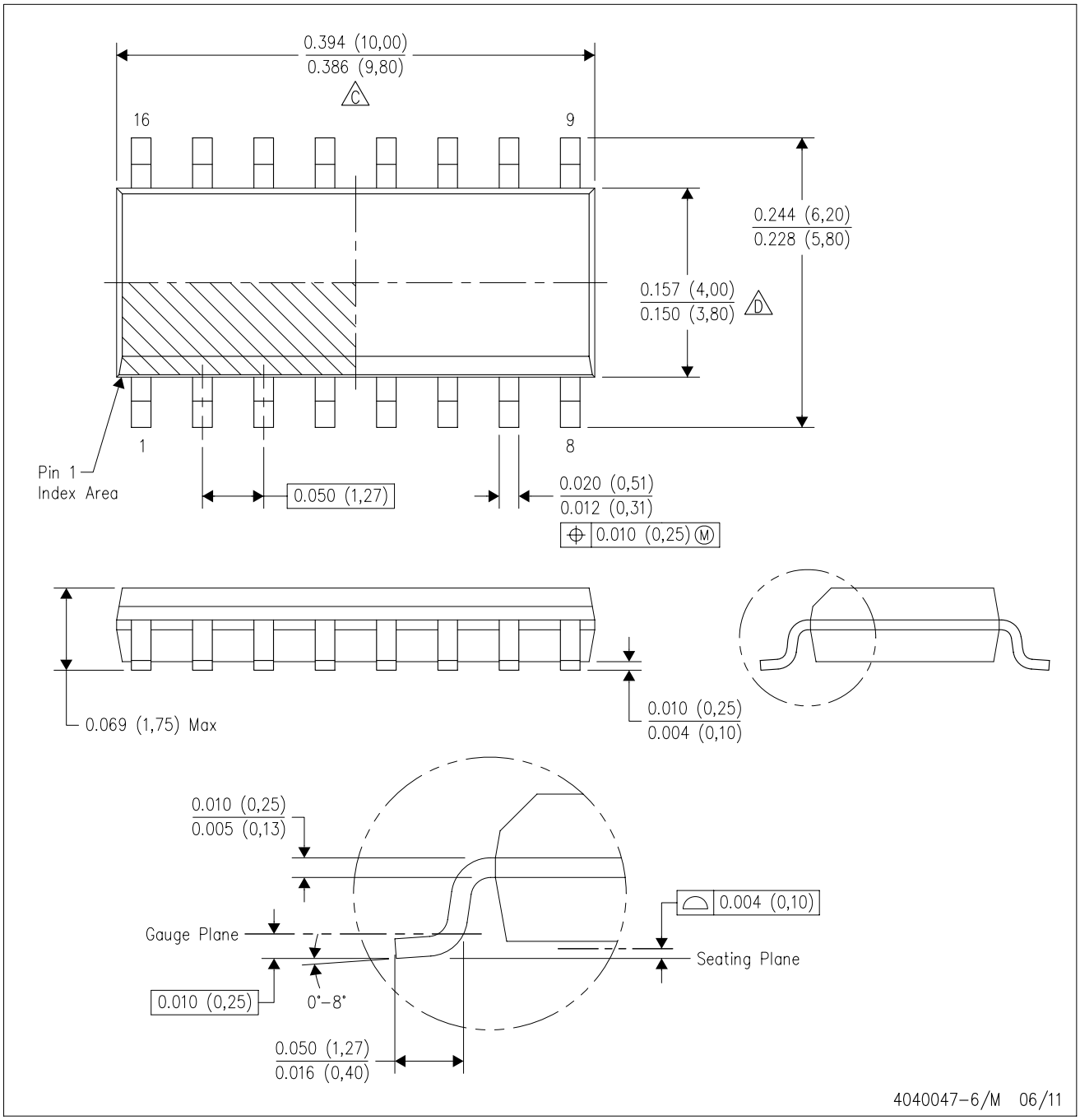

NOTES:
A. All linear dimensions are in inches (millimeters).
B. This drawing is subject to change without notice.
C. Body length does not include mold flash, protrusions, or gate burrs. Mold flash, protrusions, or gate burrs shall not exceed 0.006 (0,15) each side.
D. Body width does not include interlead flash. Interlead flash shall not exceed 0.017 (0,43) each side.
E. Reference JEDEC MS–012 variation AC.

MECHANICAL DATA

NS (R-PDSO-G)** **PLASTIC SMALL-OUTLINE PACKAGE**

14-PINS SHOWN

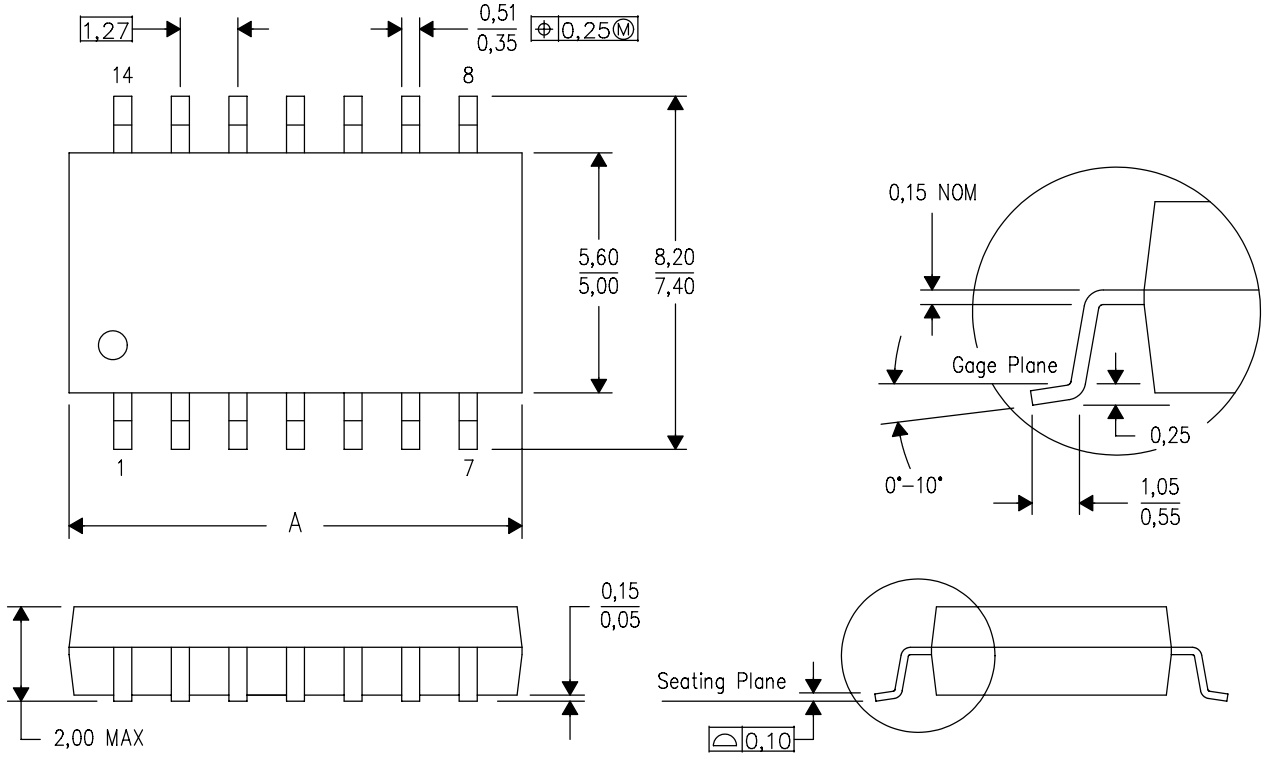

DIM \ PINS **	14	16	20	24
A MAX	10,50	10,50	12,90	15,30
A MIN	9,90	9,90	12,30	14,70

4040062/C 03/03

NOTES:
A. All linear dimensions are in millimeters.
B. This drawing is subject to change without notice.
C. Body dimensions do not include mold flash or protrusion, not to exceed 0,15.

W (R–GDFP–F16) CERAMIC DUAL FLATPACK

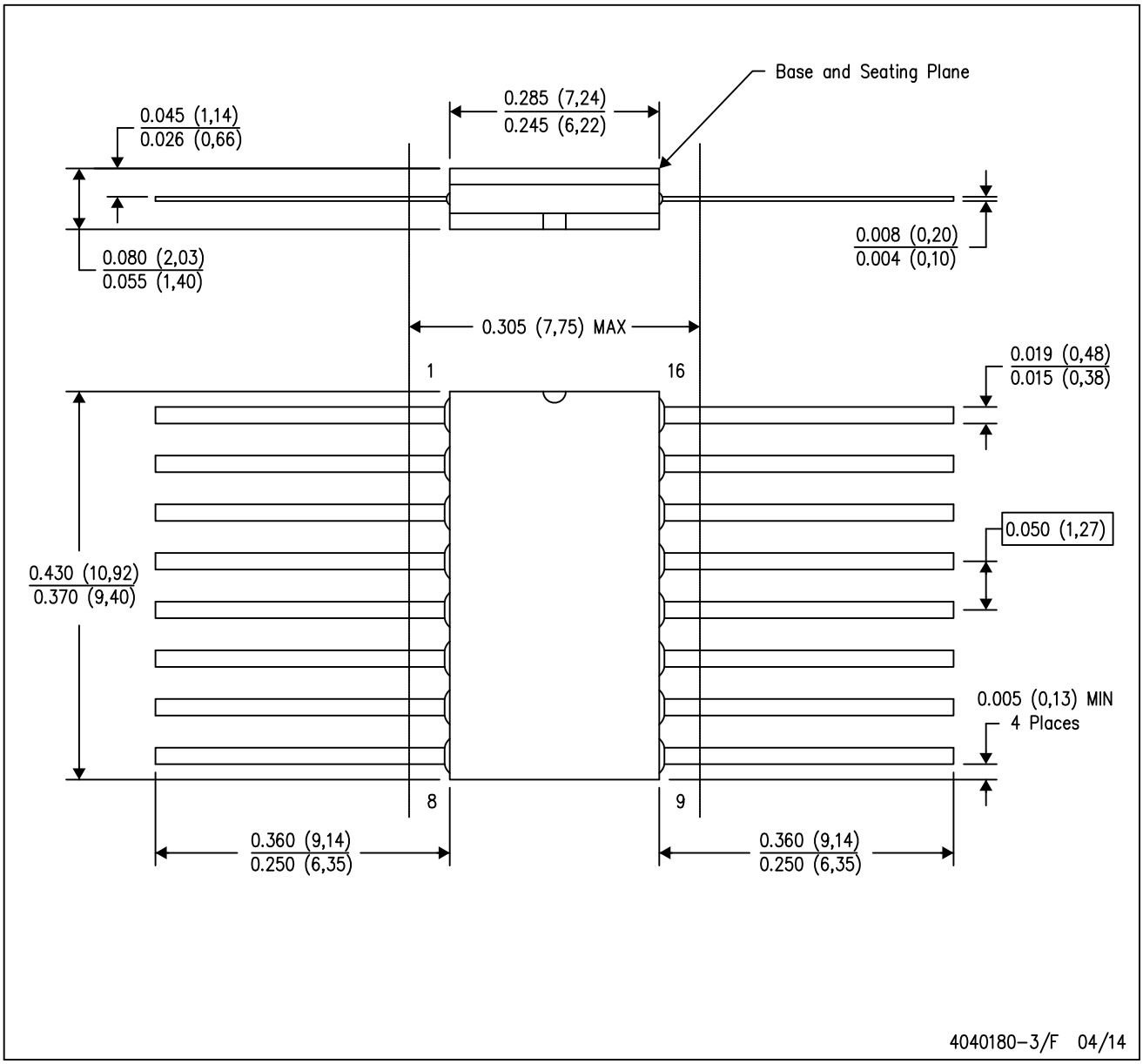

NOTES:
A. All linear dimensions are in inches (millimeters).
B. This drawing is subject to change without notice.
C. This package can be hermetically sealed with a ceramic lid using glass frit.
D. Index point is provided on cap for terminal identification only.
E. Falls within MIL STD 1835 GDFP2–F16

GENERIC PACKAGE VIEW

FK 20

LCCC - 2.03 mm max height

8.89 x 8.89, 1.27 mm pitch

LEADLESS CERAMIC CHIP CARRIER

This image is a representation of the package family, actual package may vary.
Refer to the product data sheet for package details.

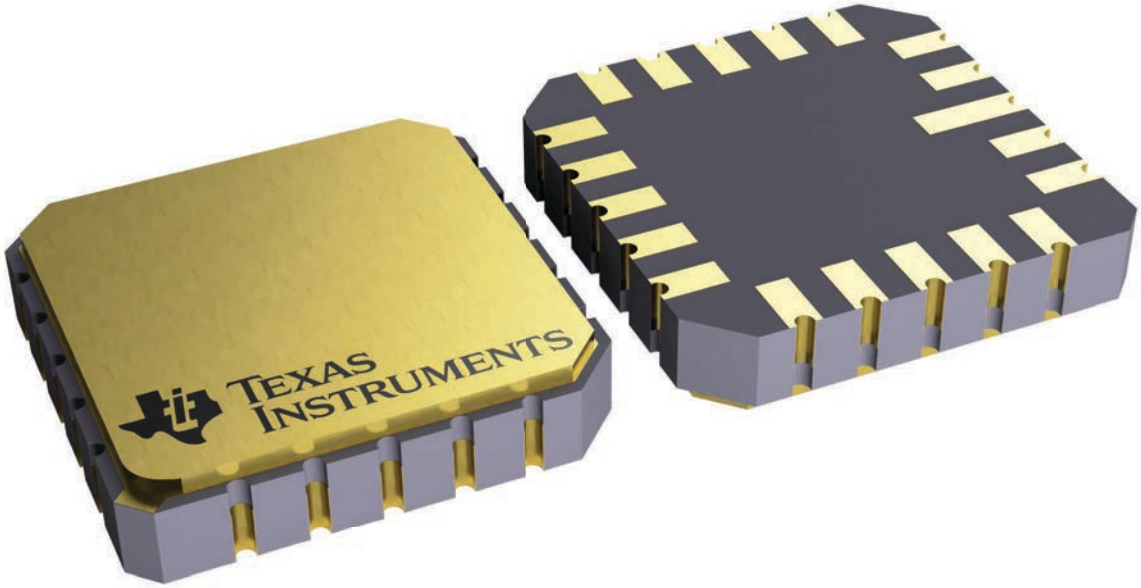

4229370VA\

J (R–GDIP–T**) CERAMIC DUAL IN–LINE PACKAGE

14 LEADS SHOWN

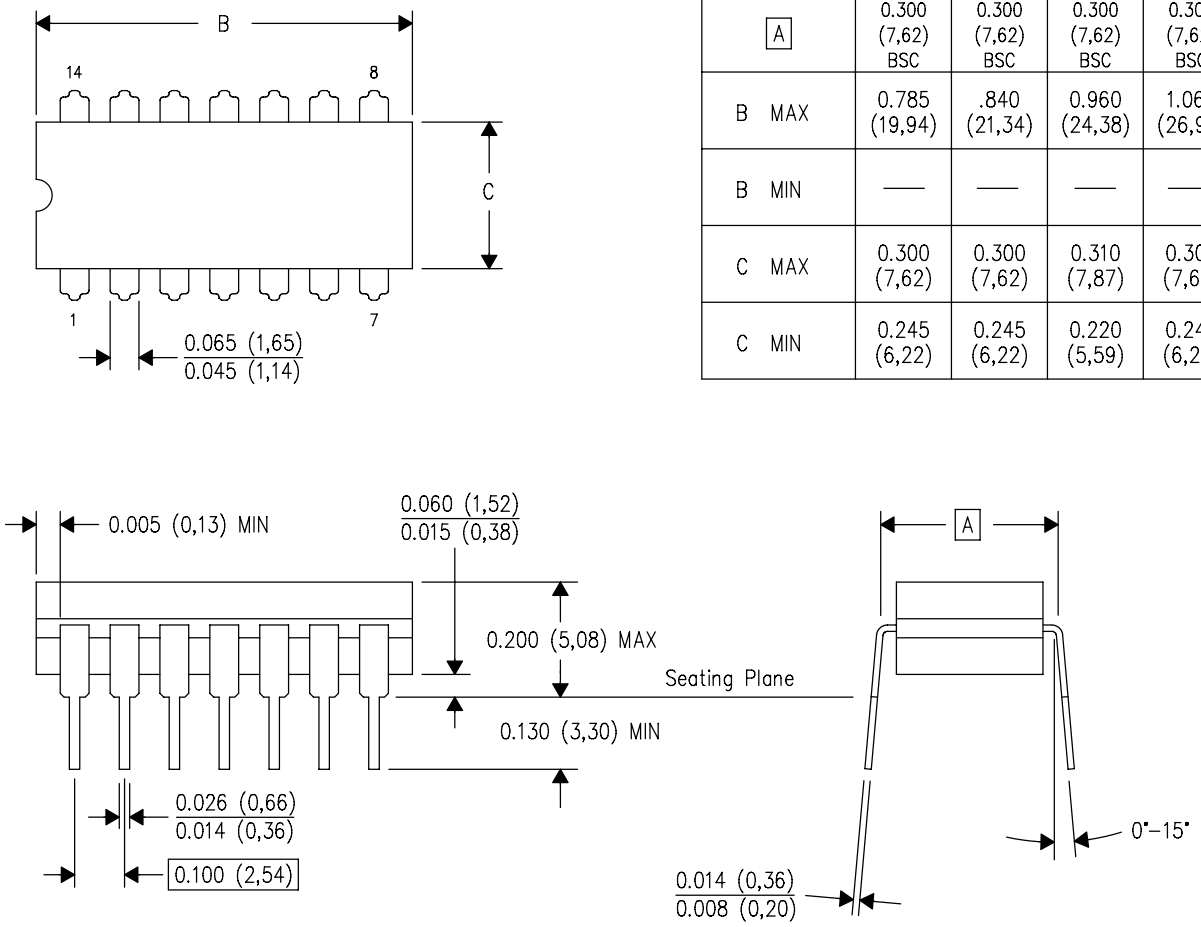

DIM \ PINS **	14	16	18	20
A	0.300 (7,62) BSC	0.300 (7,62) BSC	0.300 (7,62) BSC	0.300 (7,62) BSC
B MAX	0.785 (19,94)	.840 (21,34)	0.960 (24,38)	1.060 (26,92)
B MIN	—	—	—	—
C MAX	0.300 (7,62)	0.300 (7,62)	0.310 (7,87)	0.300 (7,62)
C MIN	0.245 (6,22)	0.245 (6,22)	0.220 (5,59)	0.245 (6,22)

4040083/F 03/03

NOTES:
- A. All linear dimensions are in inches (millimeters).
- B. This drawing is subject to change without notice.
- C. This package is hermetically sealed with a ceramic lid using glass frit.
- D. Index point is provided on cap for terminal identification only on press ceramic glass frit seal only.
- E. Falls within MIL STD 1835 GDIP1–T14, GDIP1–T16, GDIP1–T18 and GDIP1–T20.

N (R–PDIP–T**) PLASTIC DUAL–IN–LINE PACKAGE

16 PINS SHOWN

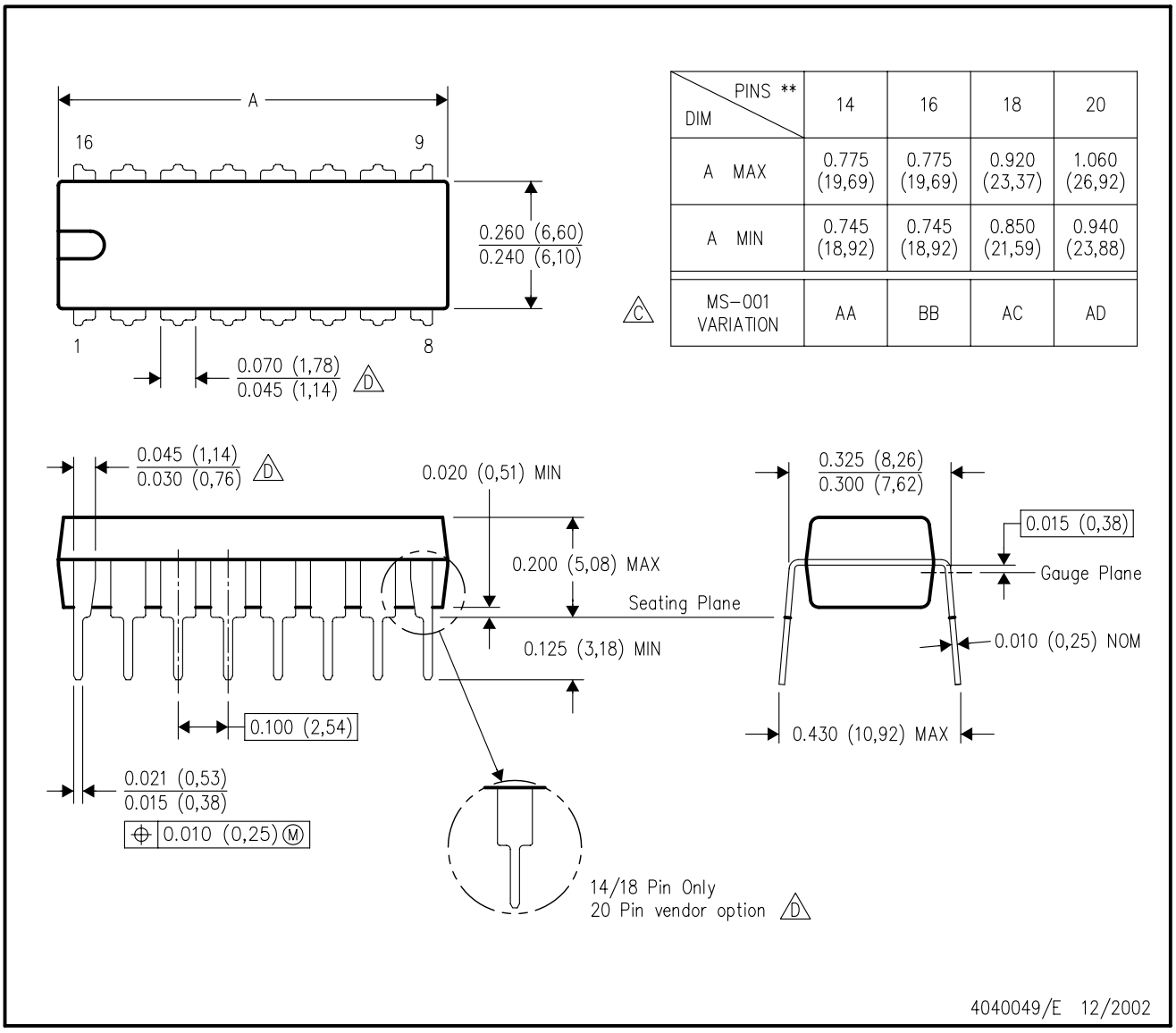

DIM \ PINS **	14	16	18	20
A MAX	0.775 (19,69)	0.775 (19,69)	0.920 (23,37)	1.060 (26,92)
A MIN	0.745 (18,92)	0.745 (18,92)	0.850 (21,59)	0.940 (23,88)
MS–001 VARIATION (C)	AA	BB	AC	AD

NOTES:
A. All linear dimensions are in inches (millimeters).
B. This drawing is subject to change without notice.
C. Falls within JEDEC MS–001, except 18 and 20 pin minimum body length (Dim A).
D. The 20 pin end lead shoulder width is a vendor option, either half or full width.

IMPORTANT NOTICE AND DISCLAIMER

TI PROVIDES TECHNICAL AND RELIABILITY DATA (INCLUDING DATA SHEETS), DESIGN RESOURCES (INCLUDING REFERENCE DESIGNS), APPLICATION OR OTHER DESIGN ADVICE, WEB TOOLS, SAFETY INFORMATION, AND OTHER RESOURCES “AS IS” AND WITH ALL FAULTS, AND DISCLAIMS ALL WARRANTIES, EXPRESS AND IMPLIED, INCLUDING WITHOUT LIMITATION ANY IMPLIED WARRANTIES OF MERCHANTABILITY, FITNESS FOR A PARTICULAR PURPOSE OR NON-INFRINGEMENT OF THIRD PARTY INTELLECTUAL PROPERTY RIGHTS.

These resources are intended for skilled developers designing with TI products. You are solely responsible for (1) selecting the appropriate TI products for your application, (2) designing, validating and testing your application, and (3) ensuring your application meets applicable standards, and any other safety, security, regulatory or other requirements.

These resources are subject to change without notice. TI grants you permission to use these resources only for development of an application that uses the TI products described in the resource. Other reproduction and display of these resources is prohibited. No license is granted to any other TI intellectual property right or to any third party intellectual property right. TI disclaims responsibility for, and you will fully indemnify TI and its representatives against, any claims, damages, costs, losses, and liabilities arising out of your use of these resources.

TI’s products are provided subject to TI’s Terms of Sale or other applicable terms available either on ti.com or provided in conjunction with such TI products. TI’s provision of these resources does not expand or otherwise alter TI’s applicable warranties or warranty disclaimers for TI products.

TI objects to and rejects any additional or different terms you may have proposed.

Mailing Address: Texas Instruments, Post Office Box 655303, Dallas, Texas 75265
Copyright © 2025, Texas Instruments Incorporated