TXU0104 / TXUN0104 4-Bit Fixed Direction Voltage-Level Translator with Schmitt-Trigger Inputs and 3-State Outputs

1 Features

- Fully configurable dual-rail design allows each port to operate from 1.1V to 5.5V
- Up to 200Mbps support for 3.3V to 5.0V
- Schmitt-trigger inputs allows for slow and noisy inputs
- Inputs with integrated static pull-down resistors prevent channels from floating
- High drive strength (up to 12mA at 5V)
- Low power consumption
  - 2.5µA maximum (25°C)
  - 6µA maximum (–40°C to 125°C)
- V_{CC} isolation and V_{CC} disconnect ($I_{off\text{-}float}$) feature
  - If either V_{CC} input is <100 mV or disconnected, all outputs are disabled and become high-impedance
- I_{off} supports partial-power-down mode operation
- Control logic (OE) with $V_{CC(MIN)}$ circuitry allows for control from either A or B port
- TXU0104 supports active high OE, TXUN0104 supports active low $\overline{OE}$
- Pinout compatible with TXB family level shifters
- Available in other variants that support common applications: TXU0204, TXU0304
- Operating temperature from –40°C to +125°C
- Latch-up performance exceeds 100mA per JESD 78, class II
- ESD protection exceeds JESD 22
  - 2500V human-body model
  - 1500V charged-device model

2 Applications

- Eliminate slow or noisy input signals
- Driving indicator LEDs or buzzers
- Debouncing a mechanical switch
- General purpose I/O level shifting
- Push-pull level shifting (UART, SPI, JTAG, and so forth)

3 Description

TXU0104 / TXUN0104 is a 4-bit, dual-supply noninverting fixed direction voltage level translation device. Ax pins are referenced to V_{CCA} logic level, OE pin can be referenced to either V_{CCA} or V_{CCB} logic levels, and Bx pins are referenced to V_{CCB} logic levels. The A port is able to accept input voltages ranging from 1.1V to 5.5V, while the B port can also accept input voltages from 1.1V to 5.5V. Fixed direction data transmission can occur from A to B or B to A when OE is set to high in reference to either supply. When OE is set to low, all output pins are in the high-impedance state. The only difference between TXU0104 and TXUN0104 is the OE / $\overline{OE}$ signal being active high and active low respectively. See Section 7.4 for a summary of the operation of the control logic.

Package Information

PART NUMBER	PACKAGE (1)	PACKAGE SIZE (2)
TXU0104	BQA (VQFN, 14)	3.00mm × 2.50mm
	PW (TSSOP, 14)	5.00mm × 4.40mm
	RUT (UQFN, 12)	2.00mm × 1.70mm
	DTR (X2SON, 12)	1.70mm × 1.00mm
TXUN0104	RUT (UQFN, 12)	2.00mm × 1.70mm

(1) For more information, see Section 11.
(2) The package size (length × width) is a nominal value and includes pins, where applicable.

An IMPORTANT NOTICE at the end of this data sheet addresses availability, warranty, changes, use in safety-critical applications, intellectual property matters and other important disclaimers. PRODUCTION DATA.

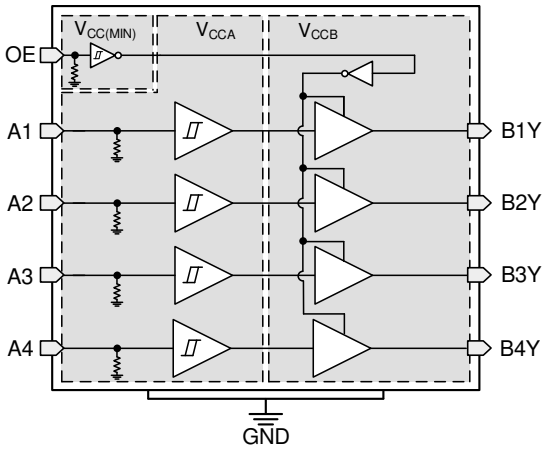

TXU0104 Functional Block Diagram

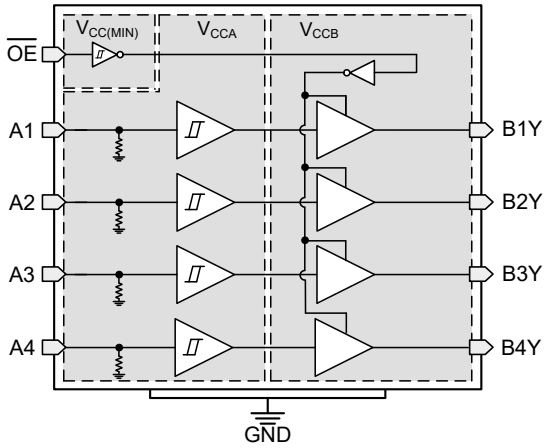

TXUN0104 Functional Block Diagram

Copyright © 2025 Texas Instruments Incorporated

Table of Contents

1 Features....1
2 Applications....1
3 Description....1
4 Pin Configuration and Functions....4
5 Specifications....6
5.1 Absolute Maximum Ratings....6
5.2 ESD Ratings....6
5.3 Recommended Operating Conditions....7
5.4 Thermal Information....7
5.5 Electrical Characteristics....8
5.6 Switching Characteristics: T_{sk}, T_{MAX}....10
5.7 Switching Characteristics, V_{CCA} = 1.2 ± 0.1V....11
5.8 Switching Characteristics, V_{CCA} = 1.5 ± 0.1V....12
5.9 Switching Characteristics, V_{CCA} = 1.8 ± 0.15V....13
5.10 Switching Characteristics, V_{CCA} = 2.5 ± 0.2V....14
5.11 Switching Characteristics, V_{CCA} = 3.3 ± 0.3V....15
5.12 Switching Characteristics, V_{CCA} = 5.0 ± 0.5V....16
5.13 Operating Characteristics....17
5.14 Typical Characteristics....18
6 Parameter Measurement Information....19
6.1 Load Circuit and Voltage Waveforms....19
7 Detailed Description....21
7.1 Overview....21
7.2 Functional Block Diagram....21
7.3 Feature Description....22
7.4 Device Functional Modes....24
8 Application and Implementation....25
8.1 Application Information....25
8.2 Typical Application....25
8.3 Power Supply Recommendations....26
8.4 Layout....26
9 Device and Documentation Support....28
9.1 Device Support....28
9.2 Documentation Support....28
9.3 Receiving Notification of Documentation Updates....28
9.4 Support Resources....28
9.5 Trademarks....28
9.6 Electrostatic Discharge Caution....28
9.7 Glossary....28
10 Revision History....28
11 Mechanical, Packaging, and Orderable Information....28

4 Pin Configuration and Functions

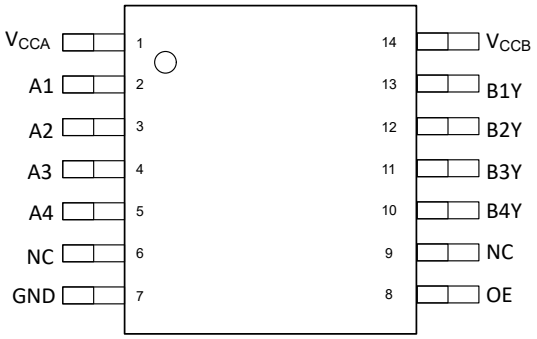

Figure 4-1. PW 14-Pin TSSOP Top View

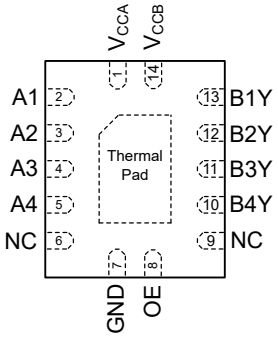

Figure 4-2. BQA Package 14-Pin VQFN Transparent Top View

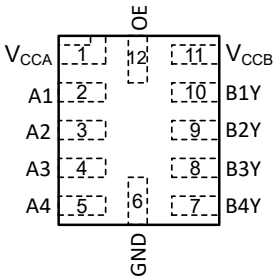

Figure 4-3. RUT Package 12-Pin UQFN Transparent Top View

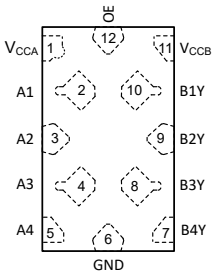

Figure 4-4. DTR Package 12-Pin X2SON Transparent Top View

Table 4-1. TXU0104 Pin Functions

PIN			I/O	DESCRIPTION
Name	PW, BQA	RUT, DTR		
A1	2	2	I	Input A1. Referenced to V_{CCA}.
A2	3	3	I	Input A2. Referenced to V_{CCA}.
A3	4	4	I	Input A3. Referenced to V_{CCA}.
A4	5	5	I	Input A4. Referenced to V_{CCA}.
B1Y	13	10	O	Output B1. Referenced to V_{CCB}.
B2Y	12	9	O	Output B2. Referenced to V_{CCB}.
B3Y	11	8	O	Output B3. Referenced to V_{CCB}.
B4Y	10	7	O	Output B4. Referenced to V_{CCB}.
GND	7	6	—	Ground
NC	6, 9		—	No internal connection.
OE	8	12	I	Output Enable. Pull to GND to place all outputs in high-impedance mode. Pull to V_{CCA} or V_{CCB} to enable all outputs.
V_{CCA}	1	1	—	A-port supply voltage. $1.1V \le V_{CCA} \le 5.5V$
V_{CCB}	14	11	—	B-port supply voltage. $1.1V \le V_{CCB} \le 5.5V$
PAD	—		—	Thermal pad. May be grounded (recommended) or left floating.

Copyright © 2025 Texas Instruments Incorporated

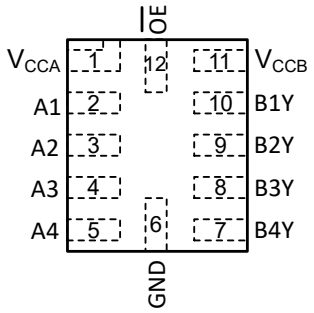

Figure 4-5. RUT Package, 12-Pin UQFN (Transparent Top View) (TXUN0104)

Table 4-2. TXUN0104 Pin Functions

PIN		TYPE	DESCRIPTION
NAME	NO.		
A1	2	I	Input A1. Referenced to V_{CCA}.
A2	3	I	Input A2. Referenced to V_{CCA}.
A3	4	I	Input A3. Referenced to V_{CCA}.
A4	5	I	Input A4. Referenced to V_{CCA}.
B1Y	10	O	Output B1. Referenced to V_{CCB}.
B2Y	9	O	Output B1. Referenced to V_{CCB}.
B3Y	8	O	Output B1. Referenced to V_{CCB}.
B4Y	7	O	Output B1. Referenced to V_{CCB}.
GND	6	-	Ground
$\overline{OE}$	12	I	Output Enable (active-low). Pull to V_{CCA} or V_{CCB} to place all outputs in high-impedance mode. Pull to GND to enable all outputs.
V_{CCA}	1	-	A-port supply voltage. 1.1V ≤ V_{CCA} ≤ 5.5V
V_{CCB}	11	-	B-port supply voltage. 1.1V ≤ V_{CCB} ≤ 5.5V

5 Specifications

5.1 Absolute Maximum Ratings

over operating free-air temperature range (unless otherwise noted)[1]

			MIN	MAX	UNIT
V_{CCA}	Supply voltage A		–0.5	6.5	V
V_{CCB}	Supply voltage B		–0.5	6.5	V
V_I	Input Voltage[2]	I/O Ports (A Port)	–0.5	6.5	V
		I/O Ports (B Port)	–0.5	6.5	
		OE	–0.5	6.5	
V_O	Voltage applied to any output in the high-impedance or power-off state[2]	A Port	–0.5	6.5	V
		B Port	–0.5	6.5	
V_O	Voltage applied to any output in the high or low state[2] [3]	A Port	–0.5	V_{CCA} + 0.5	V
		B Port	–0.5	V_{CCB} + 0.5	
I_{IK}	Input clamp current	V_I < 0	–20		mA
I_{OK}	Output clamp current	V_O < 0	–20		mA
I_O	Continuous output current		–25	25	mA
	Continuous current through V_{CC} or GND		–100	100	mA
T_j	Junction Temperature			150	°C
T_{stg}	Storage temperature		–65	150	°C

(1) Stresses beyond those listed under *Section 5.1* may cause permanent damage to the device. These are stress ratings only, which do not imply functional operation of the device at these or any other conditions beyond those indicated under *Section 5.3* Exposure beyond the limits listed in *Section 5.3* may affect device reliability.
(2) The input voltage and output negative-voltage ratings may be exceeded if the input and output current ratings are observed.
(3) The output positive-voltage rating may be exceeded up to 6.5V maximum if the output current rating is observed.

5.2 ESD Ratings

			VALUE	UNIT
$V_{(ESD)}$	Electrostatic discharge	Human body model (HBM), per ANSI/ESDA/JEDEC JS-001[1]	±2500	V
		Charged device model (CDM), per JEDEC specification JESD22-C101[2]	±1500	

(1) JEDEC document JEP155 states that 500V HBM allows safe manufacturing with a standard ESD control process.
(2) JEDEC document JEP157 states that 250V CDM allows safe manufacturing with a standard ESD control process.

Copyright © 2025 Texas Instruments Incorporated

5.3 Recommended Operating Conditions

over operating free-air temperature range (unless otherwise noted) (1) (2) (3)

			MIN	MAX	UNIT
V_{CCA}	Supply voltage A		1.08	5.5	V
V_{CCB}	Supply voltage B		1.08	5.5	V
I_{OH}	High-level output current	V_{CCO} = 1.1V		–1.5	mA
		V_{CCO} = 1.4V		–3	
		V_{CCO} = 1.65V		–4.5	
		V_{CCO} = 2.3V		–8	
		V_{CCO} = 3V		–10	
		V_{CCO} = 4.5V		–12	
I_{OL}	Low-level output current	V_{CCO} = 1.1V		1.5	mA
		V_{CCO} = 1.4V		3	
		V_{CCO} = 1.65V		4.5	
		V_{CCO} = 2.3V		8	
		V_{CCO} = 3V		10	
		V_{CCO} = 4.5V		12	
V_I	Input voltage (3)		0	5.5	V
V_O	Output voltage	Active State	0	V_{CCO}	V
		Tri-State	0	5.5	
T_A	Operating free-air temperature		–40	125	°C

(1) V_{CCI} is the V_{CC} associated with the input port.
(2) V_{CCO} is the V_{CC} associated with the output port.
(3) All control inputs and data I/Os of this device have weak pulldowns to ensure the line is not floating when undefined external to the device. The input leakage from these weak pulldowns is defined by the I_I specification indicated under Electrical Characteristics

5.4 Thermal Information

THERMAL METRIC(1)		TXU0104/TXUN0104				UNIT
		PW TSSOP)	BQA WQFN)	RUT (UQFN)	DTR (X2SON)	
		14 PINS	14 PINS	12 PINS	12 PINS	
$R_{\theta JA}$	Junction-to-ambient thermal resistance	135.8	87.2	171.9	176.6	°C/W
$R_{\theta JC(top)}$	Junction-to-case (top) thermal resistance	65.0	90.0	100.4	84.1	°C/W
$R_{\theta JB}$	Junction-to-board thermal resistance	78.8	56.0	97.1	99.1	°C/W
Y_{JT}	Junction-to-top characterization parameter	15.6	9.8	10.9	2.6	°C/W
Y_{JB}	Junction-to-board characterization parameter	78.2	56.0	95.5	98.9	°C/W
$R_{\theta JC(bottom)}$	Junction-to-case (bottom) thermal resistance	N/A	33.0	N/A	N/A	°C/W

(1) For more information about traditional and new thermal metrics, see the Semiconductor and IC Package Thermal Metrics application report.

5.5 Electrical Characteristics

over operating free-air temperature range (unless otherwise noted)[1] [2]

PARAMETER		TEST CONDITIONS	V_{CCA}	V_{CCB}	Operating free-air temperature (T_A)									UNIT
					25°C			–40°C to 85°C			–40°C to 125°C			
					MIN	TYP	MAX	MIN	TYP	MAX	MIN	TYP	MAX	
V_{T+}	Positive-going input-threshold voltage	Data Inputs (Ax, Bx) (Referenced to V_{CCI})	1.1V	1.1V				0.44		0.88	0.44		0.88	V
			1.4V	1.4V				0.60		0.98	0.60		0.98	
			1.65V	1.65V				0.76		1.13	0.76		1.13	
			2.3V	2.3V				1.08		1.56	1.08		1.56	
			3V	3V				1.48		1.92	1.48		1.92	
			4.5V	4.5V				2.19		2.74	2.19		2.74	
			5.5V	5.5V				2.65		3.33	2.65		3.33	
		OE (Referenced to V_{CCA} or V_{CCB})	1.1V	1.1V				0.44		0.88	0.44		0.88	V
			1.4V	1.4V				0.60		0.98	0.60		0.98	
			1.65V	1.65V				0.76		1.13	0.76		1.13	
			2.3V	2.3V				1.08		1.56	1.08		1.56	
			3V	3V				1.48		1.92	1.48		1.92	
			4.5V	4.5V				2.19		2.74	2.19		2.74	
			5.5V	5.5V				2.65		3.33	2.65		3.33	
V_{T-}	Negative-going input-threshold voltage	Data Inputs (Ax, Bx) (Referenced to V_{CCI})	1.1V	1.1V				0.17		0.48	0.17		0.48	V
			1.4V	1.4V				0.28		0.59	0.28		0.59	
			1.65V	1.65V				0.35		0.69	0.35		0.69	
			2.3V	2.3V				0.56		0.97	0.56		0.97	
			3V	3V				0.89		1.5	0.89		1.5	
			4.5V	4.5V				1.51		1.97	1.51		1.97	
			5.5V	5.5V				1.88		2.4	1.88		2.4	
		OE (Referenced to V_{CCA} or V_{CCB})	1.1V	1.1V				0.17		0.48	0.17		0.48	V
			1.4V	1.4V				0.28		0.59	0.28		0.59	
			1.65V	1.65V				0.35		0.69	0.35		0.69	
			2.3V	2.3V				0.56		0.97	0.56		0.97	
			3V	3V				0.89		1.5	0.89		1.5	
			4.5V	4.5V				1.51		1.97	1.51		1.97	
			5.5V	5.5V				1.88		2.46	1.88		2.46	
ΔV_T	Input-threshold hysteresis ($V_{T+} – V_{T-}$)	Data Inputs (Ax, Bx) (Referenced to V_{CCI})	1.1V	1.1V				0.20		0.40	0.20		0.40	V
			1.4V	1.4V				0.25		0.50	0.25		0.50	
			1.65V	1.65V				0.30		0.55	0.30		0.55	
			2.3V	2.3V				0.38		0.65	0.38		0.65	
			3V	3V				0.46		0.72	0.46		0.72	
			4.5V	4.5V				0.58		0.93	0.58		0.93	
			5.5V	5.5V				0.69		1.06	0.69		1.06	
		OE (Referenced to V_{CCA} or V_{CCB})	1.1V	1.1V				0.15		0.41	0.15		0.41	V
			1.4V	1.4V				0.20		0.50	0.20		0.50	
			1.65V	1.65V				0.23		0.55	0.23		0.55	
			2.3V	2.3V				0.32		0.65	0.32		0.65	
			3V	3V				0.39		0.72	0.39		0.72	
			4.5V	4.5V				0.57		0.97	0.57		0.97	
			5.5V	5.5V				0.69		1.18	0.69		1.18	

Copyright © 2025 Texas Instruments Incorporated

over operating free-air temperature range (unless otherwise noted)[1] [2]

PARAMETER		TEST CONDITIONS	V_{CCA}	V_{CCB}	Operating free-air temperature (T_A)									UNIT
					25°C			–40°C to 85°C			–40°C to 125°C			
					MIN	TYP	MAX	MIN	TYP	MAX	MIN	TYP	MAX	
V_{OH}	High-level output voltage [3]	I_{OH} = –0.1mA	1.1V – 5.5V	1.1V – 5.5V				Vcco - 0.1			Vcco - 0.1			V
		I_{OH} = –0.5mA	1.1V	1.1V				0.82			0.82			
		I_{OH} = –3mA	1.4V	1.4V				1.0			1.0			
		I_{OH} = –4.5mA	1.65V	1.65V				1.2			1.2			
		I_{OH} = –8mA	2.3V	2.3V				1.7			1.7			
		I_{OH} = –10mA	3V	3V				2.2			2.2			
		I_{OH} = –12mA	4.5V	4.5V				3.7			3.7			
V_{OL}	Low-level output voltage [4]	I_{OL} = 0.1mA	1.1V – 5.5V	1.1V – 5.5V						0.1			0.1	V
		I_{OL} = 0.5mA	1.1V	1.1V						0.27			0.27	
		I_{OL} = 3mA	1.4V	1.4V						0.35			0.35	
		I_{OL} = 4.5mA	1.65V	1.65V						0.45			0.45	
		I_{OL} = 8mA	2.3V	2.3V						0.7			0.7	
		I_{OL} = 10 mA	3V	3V						0.8			0.8	
		I_{OL} = 8mA	4.5V	4.5V						0.55			0.55	
		I_{OL} = 12mA	4.5V	4.5V						0.8			0.8	
I_I	Input leakage current	OE V_I = V_{CC} or GND	1.1V – 5.5V	1.1V – 5.5V	-0.1		1.5	-0.1		1.5	-0.1		2	µA
		Data Inputs (Ax, Bx) V_I = V_{CCI} or GND	1.1V – 5.5V	1.1V – 5.5V	-0.1		1.5	-0.1		1.5	-2		2	µA
I_{off}	Partial power down current	A Port or B Port V_I or V_O = 0V - 5.5 V	0 V	0 V - 5.5V	-1.5		1.5	-2		2	-2.5		2.5	µA
			0V - 5.5V	0V	-1.5		1.5	-2		2	-2.5		2.5	
$I_{off\text{-}float}$	Floating supply Partial power down current	A Port or B Port V_I or V_O = GND	Floating[5]	0 V - 5.5V	-1.5		1.5	-2		2	-2.5		2.5	µA
			0 V - 5.5V	Floating[5]	-1.5		1.5	-2		2	-2.5		2.5	
I_{OZ}	Tri-state output current	A or B Port: V_I = V_{CCI} or GND V_O = V_{CCO} or GND OE = GND	1.1V – 5.5V	1.1V – 5.5V	-0.3		0.3	-1		1	-2		2	µA
I_{CCA}	V_{CCA} supply current	V_I = V_{CCI} or GND I_O = 0	1.1V – 5.5V	1.1V – 5.5V			1.5			2.5			6	µA
			0V	5.5V	-0.3			-1			-1			
			5.5V	0V			1			1.5			3	
		V_I = GND I_O = 0	5.5V	Floating[5]			1.5			7			15	
I_{CCB}	V_{CCB} supply current	V_I = V_{CCI} or GND I_O = 0	1.1V – 5.5V	1.1V – 5.5V			1.5			2.5			6	µA
			0V	5.5V			1			1.5			3	
			5.5V	0V	-0.3			-1			-1			
		V_I = GND I_O = 0	Floating[5]	5.5V			1.5			7			15	
I_{CCA} + I_{CCB}	Combined supply current	V_I = V_{CCI} or GND I_O = 0	1.1V – 5.5V	1.1V – 5.5V			2.5			3			6	µA
C_i	Control Input Capacitance	V_I = 3.3V or GND	3.3V	3.3V		2.75			3			3.5		pF

over operating free-air temperature range (unless otherwise noted)[(1) (2)]

PARAMETER		TEST CONDITIONS	V_{CCA}	V_{CCB}	Operating free-air temperature (T_A)									UNIT
					25°C			–40°C to 85°C			–40°C to 125°C			
					MIN	TYP	MAX	MIN	TYP	MAX	MIN	TYP	MAX	
C_{io}	Data I/O Capacitance	OE = GND, V_O = 1.65V DC +1MHz -16dBm sine wave	3.3V	3.3V		3			4			4		pF

(1) V_{CCI} is the V_{CC} associated with the input port
(2) V_{CCO} is the V_{CC} associated with the output port
(3) Tested at $V_I = V_{T+(MAX)}$
(4) Tested at $V_I = V_{T-(MIN)}$
(5) Floating is defined as a node that is both not actively driven by an external device and has leakage not exeeding 10nA

5.6 Switching Characteristics: T_{sk}, T_{MAX}

over operating free-air temperature range (unless otherwise noted)

PARAMETER	TEST CONDITIONS		V_{CCI}	V_{CCO}	Operating free-air temperature (T_A) -40°C to 125°C			UNIT
					MIN	TYP	MAX	
T_{MAX} - Maximum Data Rate	50% Duty Cycle Input One channel switching 20% of pulse > 0.7*V_{CCO} 20% of pulse < 0.3*V_{CCO}	Up Translation	3.0V - 3.6V	4.5V - 5.5V	200			Mbps
			1.65V - 1.95V	4.5V - 5.5V	150			
			1.1V - 1.3V	4.5V - 5.5V	30			
			1.65V - 1.95V	3.0V - 3.6V	100			
			1.1V - 1.3V	3.0V - 3.6 V	30			
			1.1V - 1.3V	1.65V - 1.95V	20			
		Down Translation	4.5V - 5.5V	3.0V - 3.6V	125			
			4.5V - 5.5V	1.65V - 1.95V	50			
			4.5V - 5.5V	1.1V - 1.3V	10			
			3.0V - 3.6V	1.65V - 1.95V	50			
			3.0V - 3.6V	1.1V - 1.3V	10			
			1.65V - 1.95V	1.1V - 1.3V	10			
t_{sk} - Output skew	Timing skew between any switching outputs on the rising or falling edge	Up Translation	3.0V - 3.6V	4.5V - 5.5V			3	ns
			1.65V - 1.95V	4.5V - 5.5V			10	
			1.1V - 1.3V	4.5V - 5.5V			42	
			1.65V - 1.95V	3.0V - 3.6V			8	
			1.1V - 1.3V	3.0V - 3.6V			42	
			1.1V - 1.3V	1.65V - 1.95V			45	
		Down Translation	4.5V - 5.5V	3.0V - 3.6V			3	
			4.5V - 5.5V	1.65V - 1.95V			10	
			4.5V - 5.5V	1.1V - 1.3V			42	
			3.0V - 3.6V	1.65V - 1.95V			8	
			3.0V - 3.6V	1.1V - 1.3V			42	
			1.65V - 1.95V	1.1V - 1.3V			45	

Copyright © 2025 Texas Instruments Incorporated

5.7 Switching Characteristics, V_{CCA} = 1.2 ± 0.1V

See Figure 7-1 and Table 7-1 for test circuit and loading. See Figure 7-2, Figure 7-3, and Figure 7-4 for measurement waveforms.

PARAMETER		FROM	TO	TEST CONDITIONS	B-Port Supply Voltage (V_{CCB})																		UNIT
					1.2 ± 0.1V			1.5 ± 0.1V			1.8 ± 0.15V			2.5 ± 0.2V			3.3 ± 0.3V			5.0 ± 0.5V			
					MIN	TYP	MAX	MIN	TYP	MAX	MIN	TYP	MAX	MIN	TYP	MAX	MIN	TYP	MAX	MIN	TYP	MAX	
t_{pd}	Propagation delay	A	B	-40°C to 85°C	3.3		96	0.5		43	0.5		37	0.5		32	0.5		30	0.5		31	ns
				-40°C to 125°C	5.7		60	3		39	1.4		33	0.5		28	0.5		27	0.5		26	
		B	A	-40°C to 85°C	3.3		95	1.9		80	0.5		75	0.5		70	0.5		69	0.5		69	
				-40°C to 125°C	5.7		60	4.1		51	2.9		48	1.8		45	1.5		44	1.3		44	
t_{dis}	Disable time	OE	A	-40°C to 85°C	28.8		133	28.5		130	28.4		133	28.8		137	28.4		143	18.7		211	ns
				-40°C to 125°C	43.3		133	43.3		130	43.7		130	44.7		131	45.4		134	31.8		140	
		OE	B	-40°C to 85°C	32.5		150	27.6		117	25.8		110	22.5		104	22.1		112	20.1		181	
				-40°C to 125°C	48.3		149	43.2		120	40.8		113	36.8		104	36.5		107	33.8		111	
t_{en}	Enable time	OE	A	-40°C to 85°C	24.1		237	22.1		229	21.4		230	21.3		232	21.7		235	22.7		244	ns
				-40°C to 125°C	34.9		156	33.3		167	32		169	31.7		173	32		177	34.2		187	
		OE	B	-40°C to 85°C	21.3		237	14.3		152	11.2		140	8.8		130	8.2		130	8.4		132	
				-40°C to 125°C	29.8		143	23		116	18.6		107	15.4		97	14.5		97	14.8		103	

Copyright © 2025 Texas Instruments Incorporated

5.8 Switching Characteristics, V_{CCA} = 1.5 ± 0.1V

See Figure 7-1 and Table 7-1 for test circuit and loading. See Figure 7-2, Figure 7-3, and Figure 7-4 for measurement waveforms.

PARAMETER		FROM	TO	TEST CONDITIONS	B-Port Supply Voltage (V_{CCB})																		UNIT
					1.2 ± 0.1V			1.5 ± 0.1V			1.8 ± 0.15V			2.5 ± 0.2V			3.3 ± 0.3V			5.0 ± 0.5V			
					MIN	TYP	MAX	MIN	TYP	MAX	MIN	TYP	MAX	MIN	TYP	MAX	MIN	TYP	MAX	MIN	TYP	MAX	
t_{pd}	Propagation delay	A	B	-40°C to 85°C	1.9		80	0.5		31	0.5		25	0.5		19	0.5		17	0.5		15	ns
				-40°C to 125°C	4.1		51	1.6		31	0.5		25	0.5		20	0.5		18	0.5		16	
		B	A	-40°C to 85°C	0.5		43	0.5		31	0.5		28	0.5		26	0.5		25	0.5		24	
				-40°C to 125°C	3		39	1.6		31	0.5		28	0.5		26	0.5		25	0.5		24	
t_{dis}	Disable time	OE	A	-40°C to 85°C	20		91	19		82	18.8		81	19.2		82	19.6		83	12.2		87	ns
				-40°C to 125°C	34.9		95	32.6		86	32.8		85	33.4		87	34.2		88	24.6		92	
		OE	B	-40°C to 85°C	27.4		127	21.7		91	19.9		82	16.3		71	15.9		71	13.7		70	
				-40°C to 125°C	44.4		130	36.7		95	34.7		86	30.2		75	29.8		75	26.6		74	
t_{en}	Enable time	OE	A	-40°C to 85°C	14.9		102	14.4		86	13.5		88	12.7		90	12.6		92	13.2		97	ns
				-40°C to 125°C	25.5		102	25.2		89	24.1		91	22.8		93	22.8		86	23.5		100	
		OE	B	-40°C to 85°C	17.9		175	12.7		80	9.1		69	6.1		57	4.9		53	4.5		54	
				-40°C to 125°C	26.6		135	21		81	16.8		71	12.5		60	10.8		56	10.4		57	

Copyright © 2025 Texas Instruments Incorporated

5.9 Switching Characteristics, V_{CCA} = 1.8 ± 0.15V

See Figure 7-1 and Table 7-1 for test circuit and loading. See Figure 7-2, Figure 7-3, and Figure 7-4 for measurement waveforms.

PARAMETER		FROM	TO	TEST CONDITIONS	B-Port Supply Voltage (V_{CCB})																		UNIT
					1.2 ± 0.1V			1.5 ± 0.1V			1.8 ± 0.15V			2.5 ± 0.2V			3.3 ± 0.3V			5.0 ± 0.5V			
					MIN	TYP	MAX	MIN	TYP	MAX	MIN	TYP	MAX	MIN	TYP	MAX	MIN	TYP	MAX	MIN	TYP	MAX	
t_{pd}	Propagation delay	A	B	-40°C to 85°C	0.5		75	0.5		28	0.5		22	0.5		17	0.5		14	0.5		12	ns
				-40°C to 125°C	2.9		48	0.5		28	0.5		23	0.5		17	0.5		15	0.5		13	
		B	A	-40°C to 85°C	0.5		37	0.5		25	0.5		22	0.5		19	0.5		19	0.5		18	
				-40°C to 125°C	1.4		33	0.5		25	0.5		23	0.5		20	0.5		19	0.5		19	
t_{dis}	Disable time	OE	A	-40°C to 85°C	17.2		79	14.7		67	14.5		65	14.3		65	14.4		66	8.5		68	ns
				-40°C to 125°C	30.9		83	28		71	26.6		69	27.5		70	27.2		71	20		73	
		OE	B	-40°C to 85°C	25.4		121	18.7		81	16.5		71	12.8		60	12.5		58	9.8		55	
				-40°C to 125°C	41.7		123	34		86	30.3		76	26.2		64	25.3		62	21.8		59	
t_{en}	Enable time	OE	A	-40°C to 85°C	10.9		88	9.5		66	9.4		63	8.6		65	8.2		66	8.1		69	ns
				-40°C to 125°C	20.3		87	19		69	18.9		67	17.6		68	17.1		70	17.1		73	
		OE	B	-40°C to 85°C	16.7		177	10.4		75	8.1		58	4.9		46	3.3		42	2.2		39	
				-40°C to 125°C	25.1		135	18.7		77	15.5		60	11		49	8.7		44	7.3		42	

Copyright © 2025 Texas Instruments Incorporated

5.10 Switching Characteristics, V_{CCA} = 2.5 ± 0.2V

See Figure 7-1 and Table 7-1 for test circuit and loading. See Figure 7-2, Figure 7-3, and Figure 7-4 for measurement waveforms.

PARAMETER		FROM	TO	TEST CONDITIONS	B-Port Supply Voltage (V_{CCB})																		UNIT
					1.2 ± 0.1V			1.5 ± 0.1V			1.8 ± 0.15V			2.5 ± 0.2V			3.3 ± 0.3V			5.0 ± 0.5V			
					MIN	TYP	MAX	MIN	TYP	MAX	MIN	TYP	MAX	MIN	TYP	MAX	MIN	TYP	MAX	MIN	TYP	MAX	
t_{pd}	Propagation delay	A	B	-40°C to 85°C	0.5		70	0.5		26	0.5		20	0.5		14	0.5		12	0.5		9	ns
				-40°C to 125°C	1.8		45	0.5		26	0.5		20	0.5		14	0.5		12	0.5		10	
		B	A	-40°C to 85°C	0.5		32	0.5		19	0.5		17	0.5		14	0.5		13	0.5		13	
				-40°C to 125°C	0.5		28	0.5		20	0.5		17	0.5		14	0.5		13	0.5		13	
t_{dis}	Disable time	OE	A	-40°C to 85°C	12.9		65	10.5		51	9		51	8.1		43	8.4		44	5		45	ns
				-40°C to 125°C	24.9		68	21.8		55	19.7		50	18.2		47	18.6		48	15		49	
		OE	B	-40°C to 85°C	23.2		112	16.5		74	14		61	9		46	9.1		44	6.4		39	
				-40°C to 125°C	38.7		115	30.9		79	27.1		66	21.6		51	20.5		48	16.8		43	
t_{en}	Enable time	OE	A	-40°C to 85°C	7.9		80	5.9		50	5.1		44	4.7		39	4.4		40	3.7		41	ns
				-40°C to 125°C	15.6		74	13.5		53	12.4		47	12		42	11.5		43	10.8		44	
		OE	B	-40°C to 85°C	16.3		183	9.2		74	6		54	4		36	2.1		31	0.5		27	
				-40°C to 125°C	24.4		139	17.2		76	13		57	9.8		38	7.1		33	4.7		29	

Copyright © 2025 Texas Instruments Incorporated

5.11 Switching Characteristics, V_{CCA} = 3.3 ± 0.3V

See Figure 7-1 and Table 7-1 for test circuit and loading. See Figure 7-2, Figure 7-3, and Figure 7-4 for measurement waveforms.

PARAMETER		FROM	TO	TEST CONDITIONS	B-Port Supply Voltage (V_{CCB})																		UNIT
					1.2 ± 0.1V			1.5 ± 0.1V			1.8 ± 0.15V			2.5 ± 0.2V			3.3 ± 0.3V			5.0 ± 0.5V			
					MIN	TYP	MAX	MIN	TYP	MAX	MIN	TYP	MAX	MIN	TYP	MAX	MIN	TYP	MAX	MIN	TYP	MAX	
t_{pd}	Propagation delay	A	B	-40°C to 85°C	0.5		69	0.5		25	0.5		19	0.5		13	0.5		11	0.5		8	ns
				-40°C to 125°C	1.5		44	0.5		25	0.5		19	0.5		13	0.5		11	0.5		9	
		B	A	-40°C to 85°C	0.5		30	0.5		17	0.5		14	0.5		12	0.5		11	0.5		10	
				-40°C to 125°C	0.5		27	0.5		18	0.5		15	0.5		12	0.5		11	0.5		10	
t_{dis}	Disable time	OE	A	-40°C to 85°C	12.9		62	10.1		47	8.7		42	6.9		39	6.6		39	6.9		40	ns
				-40°C to 125°C	24		65	20.6		51	18.4		46	15.7		40	15.3		39	15.9		40	
		OE	B	-40°C to 85°C	22.7		109	15.7		71	13.2		59	8.5		42	7.6		38	4.7		34	
				-40°C to 125°C	37.6		111	29.5		75	25.4		63	19.2		46	18.5		42	14.2		36	
t_{en}	Enable time	OE	A	-40°C to 85°C	6.6		85	4.2		45	3		37	2.4		31	2.2		30	1.7		30	ns
				-40°C to 125°C	13.6		72	10.9		47	9.3		40	8.2		33	8.1		32	7.5		33	
		OE	B	-40°C to 85°C	16.3		192	8.9		76	5.4		55	2.6		34	1.8		27	0.5		22	
				-40°C to 125°C	24.3		144	16.7		78	12.2		57	8		36	6.6		29	3.7		24	

Copyright © 2025 Texas Instruments Incorporated

5.12 Switching Characteristics, V_{CCA} = 5.0 ± 0.5V

See Figure 7-1 and Table 7-1 for test circuit and loading. See Figure 7-2, Figure 7-3, and Figure 7-4 for measurement waveforms.

PARAMETER		FROM	TO	TEST CONDITIONS	B-Port Supply Voltage (V_{CCB})																		UNIT
					1.2 ± 0.1V			1.5 ± 0.1V			1.8 ± 0.15V			2.5 ± 0.2V			3.3 ± 0.3V			5.0 ± 0.5V			
					MIN	TYP	MAX	MIN	TYP	MAX	MIN	TYP	MAX	MIN	TYP	MAX	MIN	TYP	MAX	MIN	TYP	MAX	
t_{pd}	Propagation delay	A	B	-40°C to 85°C	0.5		69	0.5		24	0.5		18	0.5		13	0.5		10	0.5		8	ns
				-40°C to 125°C	1.3		44	0.5		24	0.5		19	0.5		13	0.5		11	0.5		8	
		B	A	-40°C to 85°C	0.5		31	0.5		15	0.5		12	0.5		9	0.5		8	0.5		8	
				-40°C to 125°C	0.5		26	0.5		16	0.5		13	0.5		10	0.5		9	0.5		8	
t_{dis}	Disable time	OE	A	-40°C to 85°C	10.8		58	7.7		42	5.9		36	4.2		31	3.4		30	2.8		26	ns
				-40°C to 125°C	20.8		61	17		46	14.5		40	11.8		33	10.4		31	9.6		29	
		OE	B	-40°C to 85°C	9.7		109	5.9		69	13.2		56	8.4		40	6.9		36	3.7		29	
				-40°C to 125°C	37.4		111	29.2		73	24.6		60	18.1		43	16.4		39	12.2		31	
t_{en}	Enable time	OE	A	-40°C to 85°C	6		102	2.8		44	1.2		33	0.5		25	0.5		22	0.5		21	ns
				-40°C to 125°C	12.4		81	8.8		46	6.5		36	4.7		27	4.2		24	4.4		23	
		OE	B	-40°C to 85°C	16.7		212	8.8		82	4.8		58	1.6		35	0.5		26	0.5		19	
				-40°C to 125°C	24.8		158	16.7		83	11.7		60	6.9		37	4.7		28	3.5		21	

Copyright © 2025 Texas Instruments Incorporated

5.13 Operating Characteristics

T_A = 25°C [1]

PARAMETER		Test Conditions	Supply Voltage (V_{CCB} = V_{CCA})						UNIT
			1.2 ± 0.1V	1.5 ± 0.1V	1.8 ± 0.15V	2.5 ± 0.2V	3.3 ± 0.3V	5.0 ± 0.5V	
			TYP	TYP	TYP	TYP	TYP	TYP	
C_{pdA} [2]	A to B: outputs enabled	A Port C_L = 0, R_L = Open f = 10MHz t_{rise} = t_{fall} = 1 ns	2	2	2	2	2	3	pF
	A to B: outputs disabled		2	2	2	2	2	3	
	B to A: outputs enabled		12	12	12	13	13	16	
	B to A: outputs disabled		2	2	2	2	2	3	
C_{pdB} [3]	A to B: outputs enabled	B Port C_L = 0, R_L = Open f = 10MHz t_{rise} = t_{fall} = 1ns	12	12	12	13	13	16	pF
	A to B: outputs disabled		2	2	2	2	2	3	
	B to A: outputs enabled		2	2	2	2	2	3	
	B to A: outputs disabled		2	2	2	2	2	3	

(1) For additional information about how power dissipation capacitance affects power consumption, see the CMOS Power Consumption and C_{pd} Calculation application report
(2) A-Port power dissipation capacitance per transceiver
(3) B-Port power dissipation capacitance per transceiver

5.14 Typical Characteristics

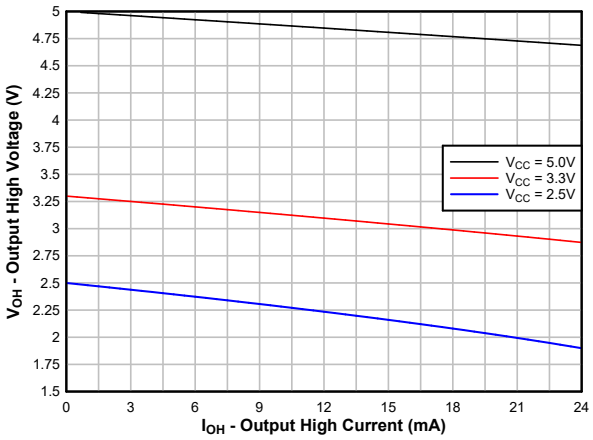

Figure 5-1. Typical (T_A=25°C) Output High Voltage (V_{OH}) vs Source Current (I_{OH})

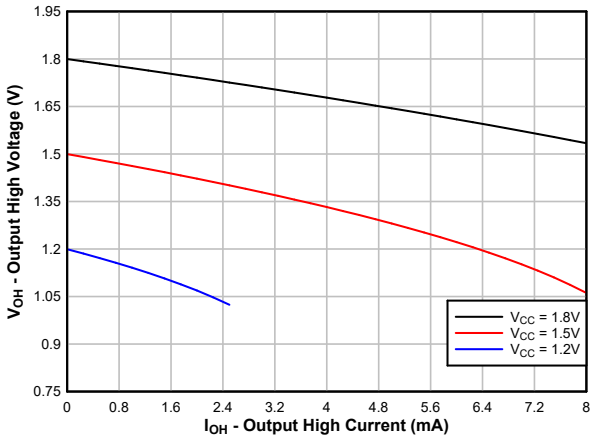

Figure 5-2. Typical (T_A=25°C) Output High Voltage (V_{OH}) vs Source Current (I_{OH})

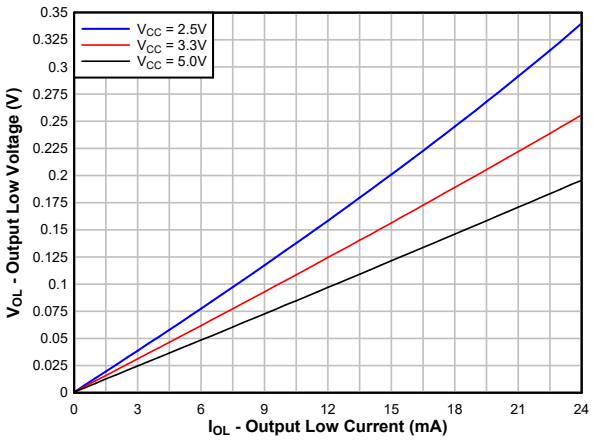

Figure 5-3. Typical (T_A=25°C) Output Low Voltage (V_{OL}) vs Sink Current (I_{OL})

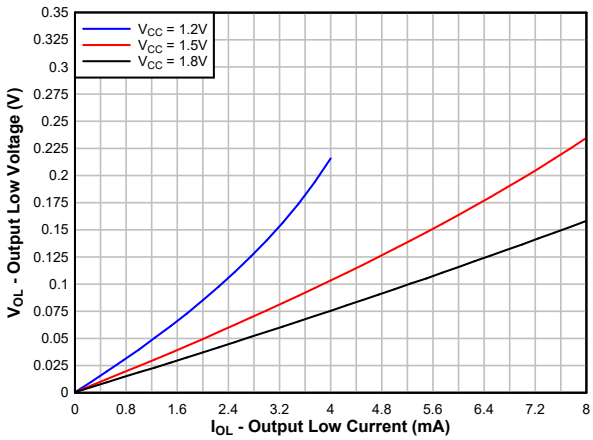

Figure 5-4. Typical (T_A=25°C) Output Low Voltage (V_{OL}) vs Sink Current (I_{OL})

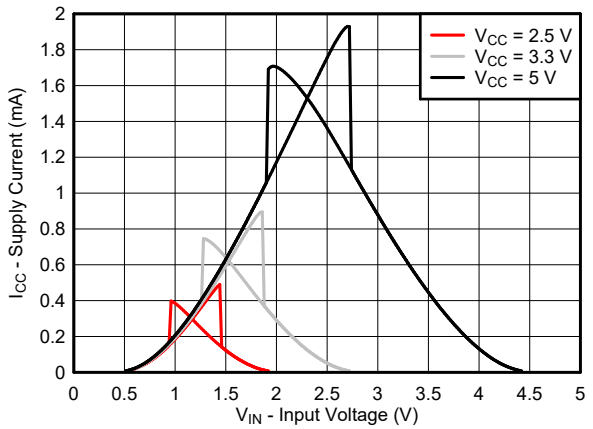

Figure 5-5. Typical (T_A=25°C) Supply Current (I_{CC}) vs Input Voltage (V_{IN})

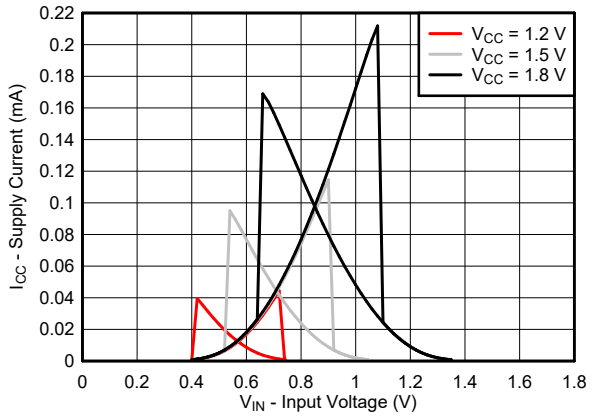

Figure 5-6. Typical (T_A=25°C) Supply Current (I_{CC}) vs Input Voltage (V_{IN})

Copyright © 2025 Texas Instruments Incorporated

6 Parameter Measurement Information

6.1 Load Circuit and Voltage Waveforms

Unless otherwise noted, generators supply all input pulses that have the following characteristics:

- f = 1MHz
- Z_O = 50Ω
- Δt/ΔV ≤ 1ns/V

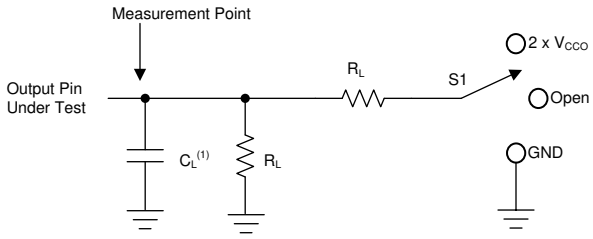

A. C_L includes probe and jig capacitance.

Figure 6-1. Load Circuit

Table 6-1. Load Circuit Conditions

Parameter	V_{CCO}	R_L	C_L	S_1	V_{TP}
t_{pd} Propagation (delay) time	1.1V – 5.5V	10kΩ	5pF	Open	N/A
t_{en}, t_{dis} Enable time, disable time	1.1V – 1.6V	10kΩ	5pF	2 × V_{CCO}	0.1V
	1.65V – 2.7V	10kΩ	5pF	2 × V_{CCO}	0.15V
	3.0V – 5.5V	10kΩ	5pF	2 × V_{CCO}	0.3V
t_{en}, t_{dis} Enable time, disable time	1.1V – 1.6V	10kΩ	5pF	GND	0.1V
	1.65V – 2.7V	10kΩ	5pF	GND	0.15V
	3.0V – 5.5V	10kΩ	5pF	GND	0.3V

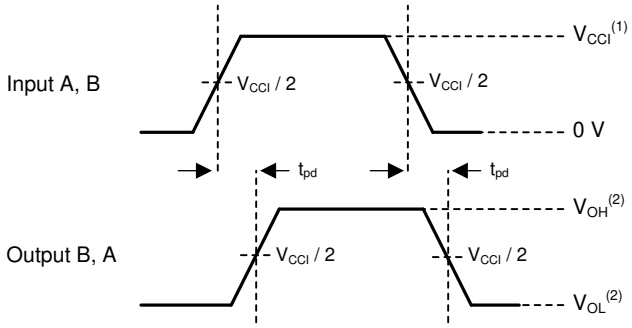

1. V_{CCI} is the supply pin associated with the input port.
2. V_{OH} and V_{OL} are typical output voltage levels that occur with specified R_L, C_L, and S_1

Figure 6-2. Propagation Delay

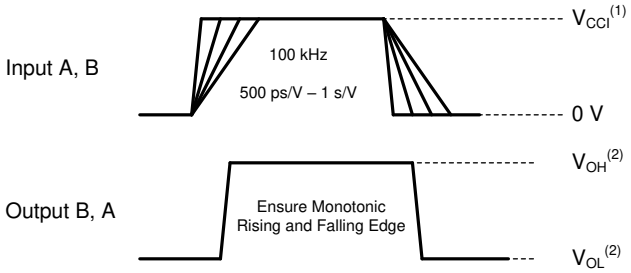

1. V_{CCI} is the supply pin associated with the input port.
2. V_{OH} and V_{OL} are typical output voltage levels that occur with specified R_L, C_L, and S_1

Figure 6-3. Input Transition Rise and Fall Rate

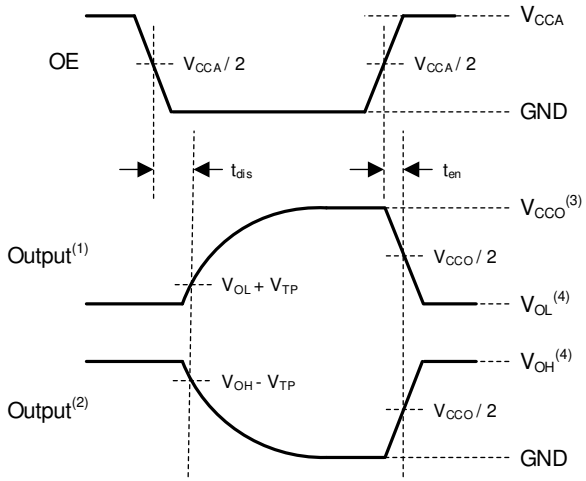

1. Output waveform on the condition that input is driven to a valid Logic Low.
2. Output waveform on the condition that input is driven to a valid Logic High.
3. V_{CCO} is the supply pin associated with the output port.
4. V_{OH} and V_{OL} are typical output voltage levels with specified R_L, C_L, and S_1.

Figure 6-4. Enable Time And Disable Time

Copyright © 2025 Texas Instruments Incorporated

7 Detailed Description

7.1 Overview

The TXU0104 / TXUN0104 is a 4-bit translating transceiver that uses two individually configurable power-supply rails. The device is operational with V_{CCA} and V_{CCB} supplies as low as 1.1V and as high as 5.5V. Additionally, the device can be operated with V_{CCA} = V_{CCB}. The A port is designed to track V_{CCA}, and the B port is designed to track V_{CCB}.

The TXU0104 / TXUN0104 device is designed for asynchronous communication between data buses, and transmits data with fixed direction from the A bus to the B bus on some channels and from the B bus to the A bus on the remaining channels. The output-enable input is used to disable the outputs so the buses are effectively isolated. The output-enable pin of the TXU0104 / TXUN0104 can be referenced to either V_{CCA} or V_{CCB}. On the TXU0104, the OE pin can be left floating or externally pulled down to ground to ensure the high-impedance state of the level shifter outputs during power up or power down. On the TXUN0104, the $\overline{OE}$ pin needs to be externally pulled up to VCC to ensure the high-impedance state of the level shifter outputs during power up or power down.

This device is fully specified for partial-power-down applications using the I_{off} current. The I_{off} protection circuitry ensures that no excessive current is drawn from or sourced into an input or output while the device is powered down.

The VCC isolation or VCC disconnect feature ensures that if either VCC is less than 100 mV or disconnected with the complementary supply within recommended operating conditions, outputs are disabled and set to the high-impedance state while the supply current is maintained. The $I_{off\text{-}float}$ circuitry ensures that no excessive current is drawn from or sourced into an input or output while the supply is floating.

Glitch-free power supply sequencing allows either supply rail to be powered on or off in any order while providing robust power sequencing performance.

7.2 Functional Block Diagram

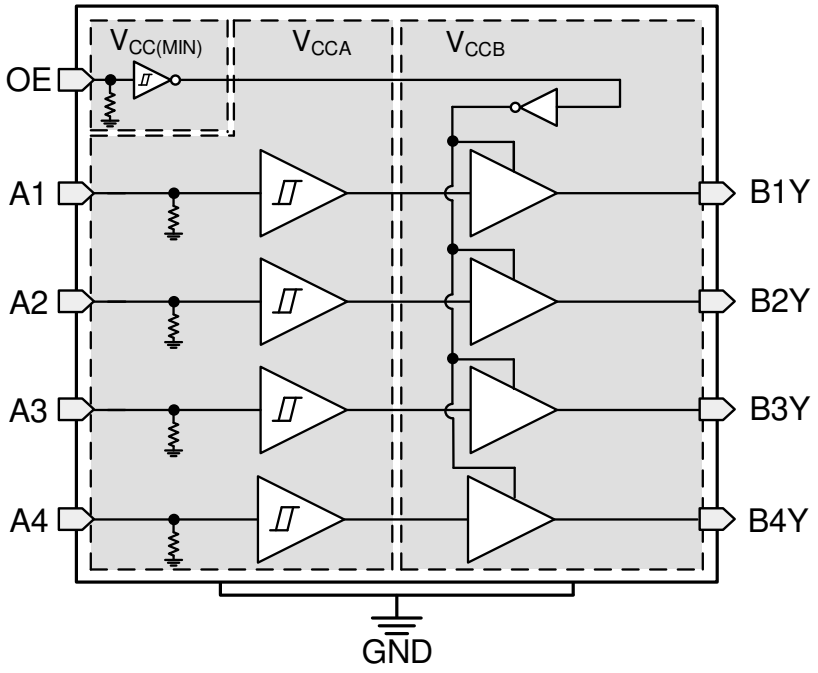

7.3 Feature Description

7.3.1 CMOS Schmitt-Trigger Inputs with Integrated Pulldowns

Standard CMOS inputs are high impedance and are typically modeled as a resistor in parallel with the input capacitance given in the *Section 5.5*. The worst case resistance is calculated with the maximum input voltage, given in the *Section 5.1*, and the maximum input leakage current, given in the Electrical Characteristics, using ohm's law (R = V ÷ I).

The Schmitt-trigger input architecture provides hysteresis as defined by ΔV_T in the Electrical Characteristics, which makes this device extremely tolerant to slow or noisy inputs. Driving the inputs slowly will increase dynamic current consumption of the device. See Understanding Schmitt Triggers for additional information regarding Schmitt-trigger inputs.

7.3.1.1 Inputs with Integrated Static Pull-Down Resistors

This device has 5MΩ typical integrated weak pull-downs for each input. This feature allows all inputs to be left floating without the concern for unstable outputs or increased current consumption. This also helps to reduce external component count for applications where not all channels are used or need to be fixed low. If an external pull-up is required, it should be no larger than 1MΩ to avoid contention with the 5MΩ internal pull-down.

7.3.2 Control Logic (OE / $\overline{OE}$) with $V_{CC(MIN)}$ Circuitry

The output-enable input (OE / $\overline{OE}$) is used to disable the outputs so the buses are effectively isolated. The output-enable pin of the TXU0x04 has $V_{CC(MIN)}$ circuitry, which allows the OE / $\overline{OE}$ pins to operate with the lower supply voltage. The *Over-Voltage Tolerant Inputs* feature allows the OE / $\overline{OE}$ pins to operate with the higher supply voltage. This combination means that the enable pin can be referenced to either V_{CCA} or V_{CCB} supply. Multiple permutations of each device are possible since the controller can be placed on either the A or B port and can still control the enable pin.

7.3.3 Balanced High-Drive CMOS Push-Pull Outputs

A balanced output allows the device to sink and source similar currents. The high drive capability of this device creates fast edges into light loads, so routing and load conditions should be considered to prevent ringing. Additionally, the outputs of this device are capable of driving larger currents than the device can sustain without being damaged. *Section 5.1* defines the electrical and thermal limits that must be followed at all times.

7.3.4 Partial Power Down (I_{off})

The inputs and outputs for this device enter a high-impedance state when the device is powered down, inhibiting current backflow into the device. The I_{off} in the *Section 5.5* specifies the maximum leakage into or out of any input or output pin on the device.

7.3.5 VCC Isolation and V_{CC} Disconnect

The outputs for this device are disabled and enter a high-impedance state when either supply is <100 mV or left floating (disconnected), with the complementary supply within recommended operating conditions. It is recommended that the inputs are kept low before floating (disconnecting) either supply.

The $I_{CCx(floating)}$ in the *Section 5.5* specifies the maximum supply current. The $I_{off(float)}$ in the *Section 5.5* specifies the maximum leakage into or out of any input or output pin on the device.

Copyright © 2025 Texas Instruments Incorporated

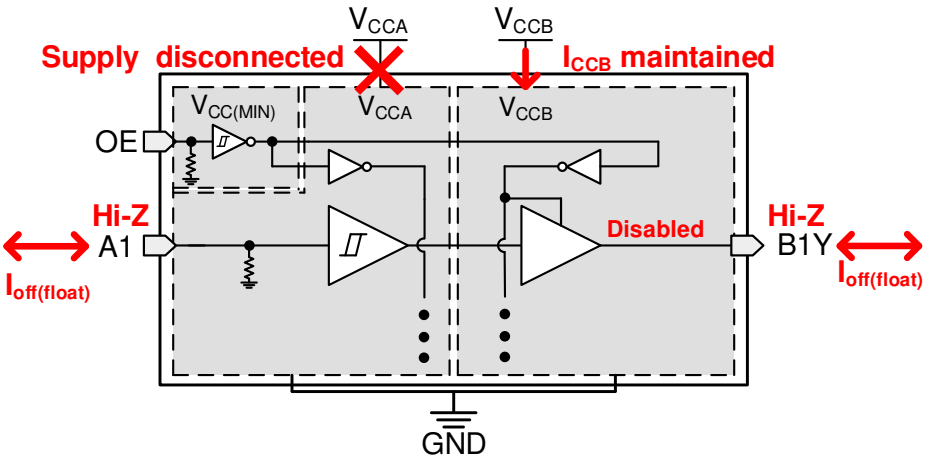

Figure 7-1. V_{CC} Disconnect Feature (TXU0104)

7.3.6 Over-Voltage Tolerant Inputs

Input signals to this device can be driven above the supply voltage so long as they remain below the maximum input voltage value specified in the Section 5.3.

7.3.7 Glitch-Free Power Supply Sequencing

Either supply rail may be powered on or off in any order without producing a glitch on the inputs or outputs (that is, where the output erroneously transitions to VCC when it should be held low or vice versa). Glitches of this nature can be misinterpreted by a peripheral as a valid data bit, which could trigger a false device reset of the peripheral, a false device configuration of the peripheral, or even a false data initialization by the peripheral.

Copyright © 2025 Texas Instruments Incorporated

7.3.8 Negative Clamping Diodes

Figure 7-2 depicts the inputs and outputs to this device that have negative clamping diodes.

CAUTION

Voltages beyond the values specified in the Section 5.1 table can cause damage to the device. The input negative-voltage and output voltage ratings may be exceeded if the input and output clamp-current ratings are observed.

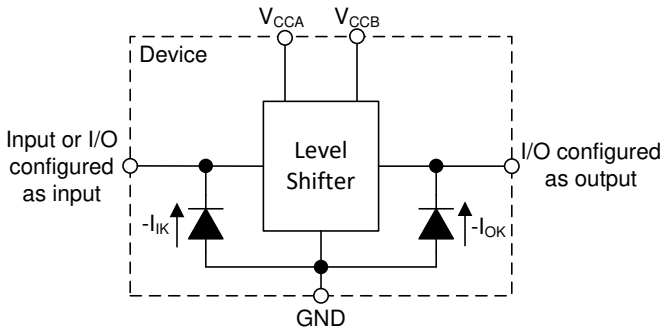

Figure 7-2. Electrical Placement of Clamping Diodes for Each Input and Output

7.3.9 Fully Configurable Dual-Rail Design

The V_{CCA} and V_{CCB} pins can be supplied at any voltage from 1.1V to 5.5V, making the device suitable for translating between any of the voltage nodes (1.2V, 1.5V, 1.8V, 3.3V, and 5.0V).

7.3.10 Supports High-Speed Translation

The TXU0104 / TXUN0104 device can support high data-rate applications. The translated signal data rate can be up to 200 Mbps when the signal is translated from 3.3 V to 5.0 V.

7.4 Device Functional Modes

Table 7-1. Function Table

CONTROL INPUTS		Port Status		OPERATION
OE (TXU0104)	$\overline{OE}$ (TXUN0104)	Input	Output	
H	L	L	L	Unidirectional non-inverting voltage translation
H	L	H	H	Unidirectional non-inverting voltage translation
L	H	X	Hi-Z	Isolation

Copyright © 2025 Texas Instruments Incorporated

8 Application and Implementation

Note

Information in the following applications sections is not part of the TI component specification, and TI does not warrant its accuracy or completeness. TI's customers are responsible for determining suitability of components for their purposes, as well as validating and testing their design implementation to confirm system functionality.

8.1 Application Information

The TXU0104 / TXUN0104 device can be used in level-translation applications for interfacing devices or systems operating at different interface voltages with one another. The TXU0104 / TXUN0104 device is ideal for use in applications where a push-pull driver is connected to the data Inputs. The maximum data rate can be up to 200Mbps when device translates a signal from 3.3V to 5.0V.

8.2 Typical Application

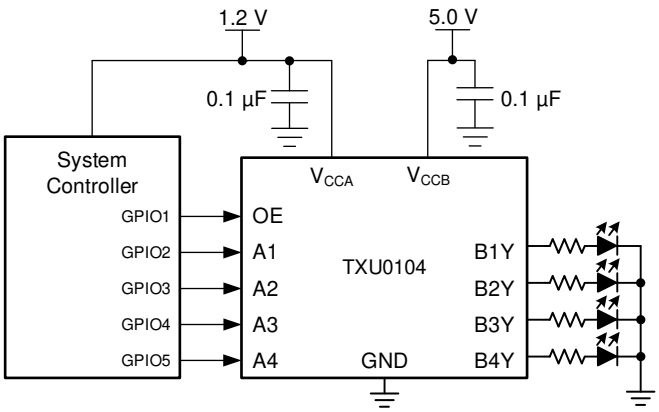

Figure 8-1. TXU0104 LED Driver Application

8.2.1 Design Requirements

Use the parameters listed in Table 8-1 for this design example.

Table 8-1. Design Parameters

DESIGN PARAMETERS	EXAMPLE VALUES
Input voltage range	1.1V to 5.5V
Output voltage range	1.1V to 5.5V

8.2.2 Detailed Design Procedure

To begin the design process, determine the following:

- Input voltage range
  - Use the supply voltage of the device that is driving the TXU0104 device to determine the input voltage range. For a valid logic-high, the value must exceed the positive-going input-threshold voltage (V_{T+}) of the input port. For a valid logic low the value must be less than the negative-going input-threshold voltage (V_{T-}) of the input port.
- Output voltage range
  - Use the supply voltage of the device that the TXU0104 device is driving to determine the output voltage range.

8.2.3 Application Curve

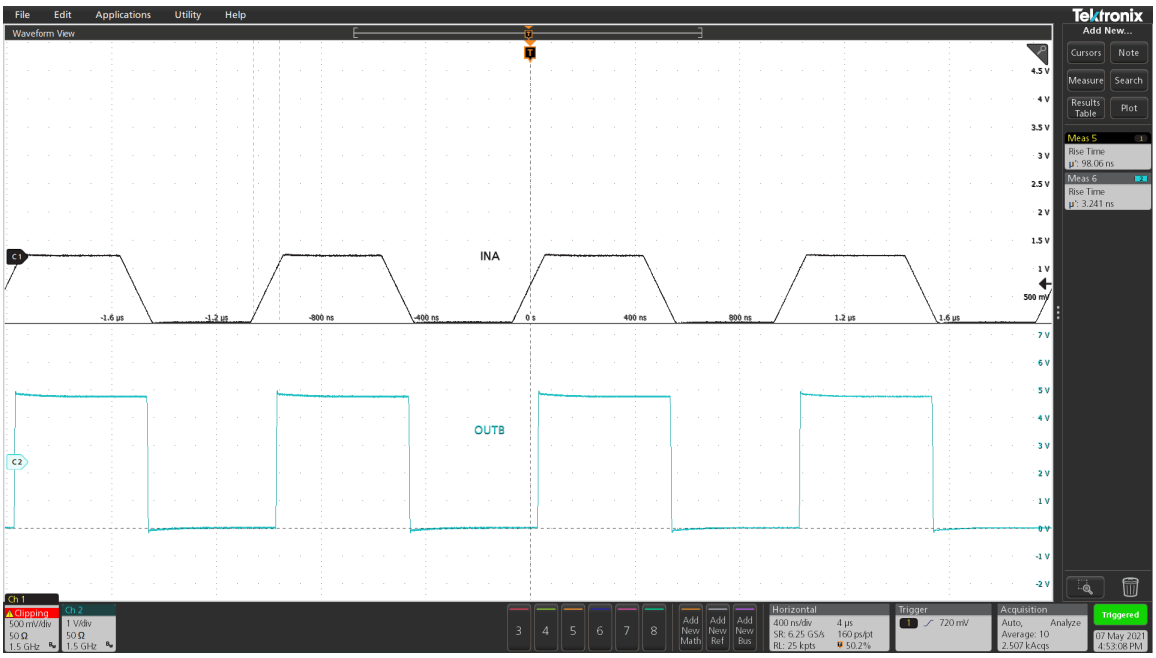

Figure 8-2. Up Translation at 1MHz (1.2V to 5V)

8.3 Power Supply Recommendations

Always apply a ground reference to the GND pins first. This device is designed for glitch free power sequencing without any supply sequencing requirements such as ramp order or ramp rate.

Section 7.3.7 describes how this device was designed with various power supply sequencing methods in mind to help prevent unintended triggering of downstream devices.

8.4 Layout

8.4.1 Layout Guidelines

To ensure reliability of the device, following common printed-circuit board layout guidelines are recommended:

- Use bypass capacitors on the power supply pins and place them as close to the device as possible. A 0.1μF capacitor is recommended, but transient performance can be improved by having 1μF and 0.1μF capacitors in parallel as bypass capacitors.
- The high drive capability of this device creates fast edges into light loads so routing and load conditions should be considered to prevent ringing.

Copyright © 2025 Texas Instruments Incorporated

8.4.2 Layout Example

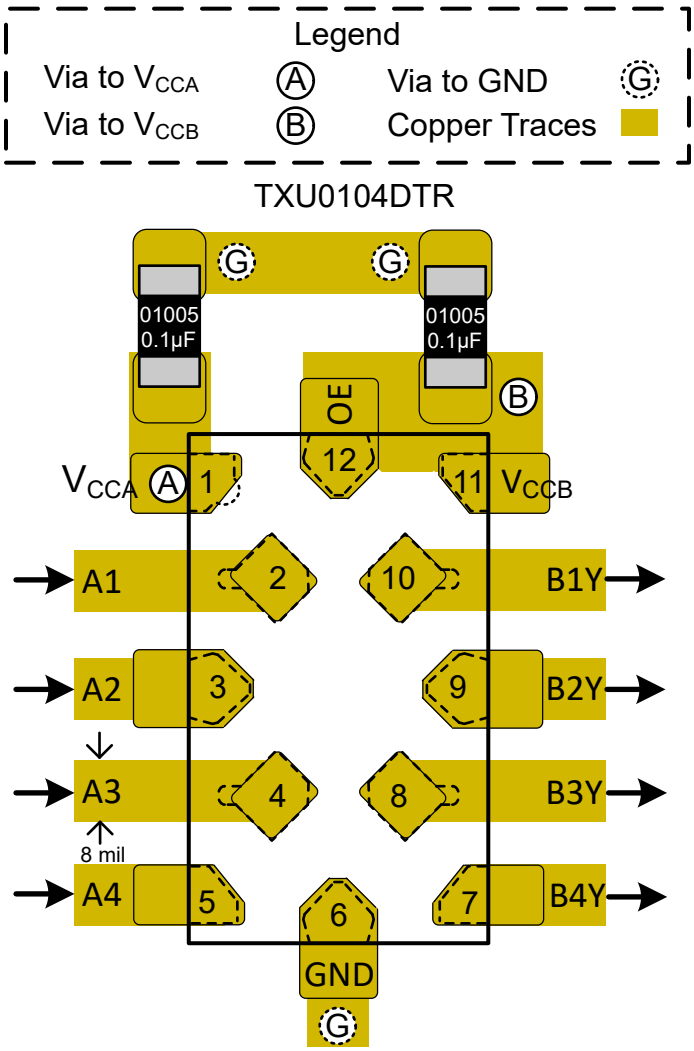

Figure 8-3. Layout Example – TXU0104

9 Device and Documentation Support

9.1 Device Support

9.2 Documentation Support

9.2.1 Related Documentation

- Texas Instruments, *Understanding Schmitt Triggers* application report
- Texas Instruments, *CMOS Power Consumption and C_{pd} Calculation* application report

9.3 Receiving Notification of Documentation Updates

To receive notification of documentation updates, navigate to the device product folder on ti.com. Click on *Notifications* to register and receive a weekly digest of any product information that has changed. For change details, review the revision history included in any revised document.

9.4 Support Resources

TI E2E™ support forums are an engineer's go-to source for fast, verified answers and design help — straight from the experts. Search existing answers or ask your own question to get the quick design help you need.

Linked content is provided "AS IS" by the respective contributors. They do not constitute TI specifications and do not necessarily reflect TI's views; see TI's Terms of Use.

9.5 Trademarks

TI E2E™ is a trademark of Texas Instruments.
All trademarks are the property of their respective owners.

9.6 Electrostatic Discharge Caution

This integrated circuit can be damaged by ESD. Texas Instruments recommends that all integrated circuits be handled with appropriate precautions. Failure to observe proper handling and installation procedures can cause damage.

ESD damage can range from subtle performance degradation to complete device failure. Precision integrated circuits may be more susceptible to damage because very small parametric changes could cause the device not to meet its published specifications.

9.7 Glossary

TI Glossary	This glossary lists and explains terms, acronyms, and definitions.

10 Revision History

NOTE: Page numbers for previous revisions may differ from page numbers in the current version.

Changes from Revision A (September 2021) to Revision B (February 2025)	Page
• Added TXUN0104 information throughout the datasheet	1

Changes from Revision * (May 2021) to Revision A (September 2021)	Page
• Changed the status of the TXU0104BQA, TXU0104RUT, and TXU0104DTR devices from: *Product Preview* to: *Production Data*	1

11 Mechanical, Packaging, and Orderable Information

The following pages include mechanical, packaging, and orderable information. This information is the most current data available for the designated devices. This data is subject to change without notice and revision of this document. For browser-based versions of this data sheet, refer to the left-hand navigation.

Copyright © 2025 Texas Instruments Incorporated

PACKAGING INFORMATION

Orderable part number	Status (1)	Material type (2)	Package | Pins	Package qty | Carrier	RoHS (3)	Lead finish/ Ball material (4)	MSL rating/ Peak reflow (5)	Op temp (°C)	Part marking (6)
TXU0104BQAR	Active	Production	WQFN (BQA) | 14	3000 | LARGE T&R	Yes	NIPDAU	Level-1-260C-UNLIM	-40 to 125	TX0104
TXU0104BQAR.A	Active	Production	WQFN (BQA) | 14	3000 | LARGE T&R	Yes	NIPDAU	Level-1-260C-UNLIM	-40 to 125	TX0104
TXU0104BQARG4	Active	Production	WQFN (BQA) | 14	3000 | LARGE T&R	Yes	NIPDAU	Level-1-260C-UNLIM	-40 to 125	TX0104
TXU0104BQARG4.A	Active	Production	WQFN (BQA) | 14	3000 | LARGE T&R	Yes	NIPDAU	Level-1-260C-UNLIM	-40 to 125	TX0104
TXU0104DTRR	Active	Production	X2QFN (DTR) | 12	3000 | LARGE T&R	Yes	NIPDAU	Level-1-260C-UNLIM	-40 to 125	1KJ
TXU0104DTRR.A	Active	Production	X2QFN (DTR) | 12	3000 | LARGE T&R	Yes	NIPDAU	Level-1-260C-UNLIM	-40 to 125	1KJ
TXU0104DTRRG4.A	Active	Production	X2QFN (DTR) | 12	3000 | LARGE T&R	Yes	NIPDAU	Level-1-260C-UNLIM	-40 to 125	1KJ
TXU0104PWR	Active	Production	TSSOP (PW) | 14	2000 | LARGE T&R	Yes	NIPDAU	Level-1-260C-UNLIM	-40 to 125	TXU0104
TXU0104PWR.A	Active	Production	TSSOP (PW) | 14	2000 | LARGE T&R	Yes	NIPDAU	Level-1-260C-UNLIM	-40 to 125	TXU0104
TXU0104PWRG4	Active	Production	TSSOP (PW) | 14	2000 | LARGE T&R	Yes	NIPDAU	Level-1-260C-UNLIM	-40 to 125	TXU0104
TXU0104PWRG4.A	Active	Production	TSSOP (PW) | 14	2000 | LARGE T&R	Yes	NIPDAU	Level-1-260C-UNLIM	-40 to 125	TXU0104
TXU0104RUTR	Active	Production	UQFN (RUT) | 12	3000 | LARGE T&R	Yes	NIPDAU	Level-1-260C-UNLIM	-40 to 125	1J4
TXU0104RUTR.A	Active	Production	UQFN (RUT) | 12	3000 | LARGE T&R	Yes	NIPDAU	Level-1-260C-UNLIM	-40 to 125	1J4
TXU0104RUTRG4.A	Active	Production	UQFN (RUT) | 12	3000 | LARGE T&R	Yes	NIPDAU	Level-1-260C-UNLIM	-40 to 125	1J4
TXUN0104RUTR	Active	Production	UQFN (RUT) | 12	3000 | LARGE T&R	Yes	NIPDAU	Level-1-260C-UNLIM	-40 to 125	1UE
TXUN0104RUTR.A	Active	Production	UQFN (RUT) | 12	3000 | LARGE T&R	Yes	NIPDAU	Level-1-260C-UNLIM	-40 to 125	1UE

(1) **Status:** For more details on status, see our product life cycle.

(2) **Material type:** When designated, preproduction parts are prototypes/experimental devices, and are not yet approved or released for full production. Testing and final process, including without limitation quality assurance, reliability performance testing, and/or process qualification, may not yet be complete, and this item is subject to further changes or possible discontinuation. If available for ordering, purchases will be subject to an additional waiver at checkout, and are intended for early internal evaluation purposes only. These items are sold without warranties of any kind.

(3) **RoHS values:** Yes, No, RoHS Exempt. See the TI RoHS Statement for additional information and value definition.

(4) **Lead finish/Ball material:** Parts may have multiple material finish options. Finish options are separated by a vertical ruled line. Lead finish/Ball material values may wrap to two lines if the finish value exceeds the maximum column width.

(5) **MSL rating/Peak reflow:** The moisture sensitivity level ratings and peak solder (reflow) temperatures. In the event that a part has multiple moisture sensitivity ratings, only the lowest level per JEDEC standards is shown. Refer to the shipping label for the actual reflow temperature that will be used to mount the part to the printed circuit board.

(6) **Part marking:** There may be an additional marking, which relates to the logo, the lot trace code information, or the environmental category of the part.

Multiple part markings will be inside parentheses. Only one part marking contained in parentheses and separated by a "~" will appear on a part. If a line is indented then it is a continuation of the previous line and the two combined represent the entire part marking for that device.

Important Information and Disclaimer: The information provided on this page represents TI's knowledge and belief as of the date that it is provided. TI bases its knowledge and belief on information provided by third parties, and makes no representation or warranty as to the accuracy of such information. Efforts are underway to better integrate information from third parties. TI has taken and continues to take reasonable steps to provide representative and accurate information but may not have conducted destructive testing or chemical analysis on incoming materials and chemicals. TI and TI suppliers consider certain information to be proprietary, and thus CAS numbers and other limited information may not be available for release.

In no event shall TI's liability arising out of such information exceed the total purchase price of the TI part(s) at issue in this document sold by TI to Customer on an annual basis.

OTHER QUALIFIED VERSIONS OF TXU0104 :

- Automotive : TXU0104-Q1

NOTE: Qualified Version Definitions:

- Automotive - Q100 devices qualified for high-reliability automotive applications targeting zero defects

TAPE AND REEL INFORMATION

REEL DIMENSIONS

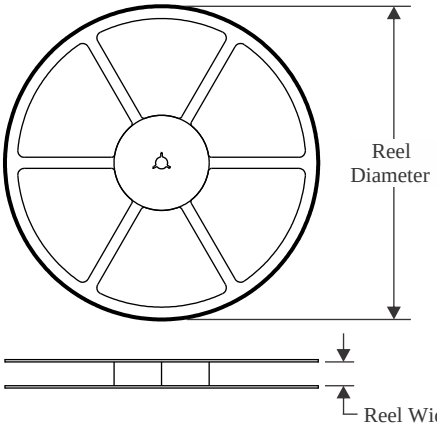

TAPE DIMENSIONS

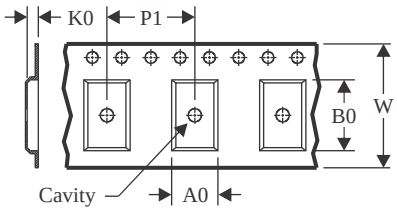

A0	Dimension designed to accommodate the component width
B0	Dimension designed to accommodate the component length
K0	Dimension designed to accommodate the component thickness
W	Overall width of the carrier tape
P1	Pitch between successive cavity centers

QUADRANT ASSIGNMENTS FOR PIN 1 ORIENTATION IN TAPE

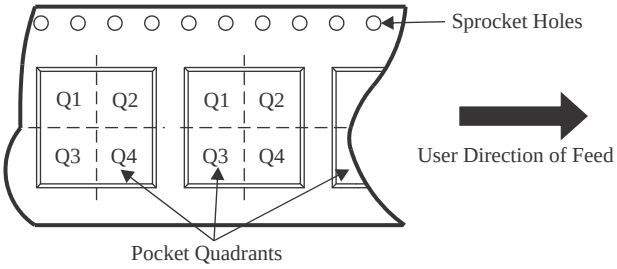

*All dimensions are nominal

Device	Package Type	Package Drawing	Pins	SPQ	Reel Diameter (mm)	Reel Width W1 (mm)	A0 (mm)	B0 (mm)	K0 (mm)	P1 (mm)	W (mm)	Pin1 Quadrant
TXU0104BQAR	WQFN	BQA	14	3000	180.0	12.4	2.8	3.3	1.1	4.0	12.0	Q1
TXU0104BQARG4	WQFN	BQA	14	3000	180.0	12.4	2.8	3.3	1.1	4.0	12.0	Q1
TXU0104DTRR	X2QFN	DTR	12	3000	180.0	9.5	0.93	1.49	0.43	2.0	8.0	Q1
TXU0104PWR	TSSOP	PW	14	2000	330.0	12.4	6.9	5.6	1.6	8.0	12.0	Q1
TXU0104PWRG4	TSSOP	PW	14	2000	330.0	12.4	6.9	5.6	1.6	8.0	12.0	Q1
TXU0104RUTR	UQFN	RUT	12	3000	180.0	9.5	1.9	2.2	0.7	4.0	8.0	Q1
TXUN0104RUTR	UQFN	RUT	12	3000	180.0	8.4	2.0	2.3	0.75	4.0	8.0	Q1

TAPE AND REEL BOX DIMENSIONS

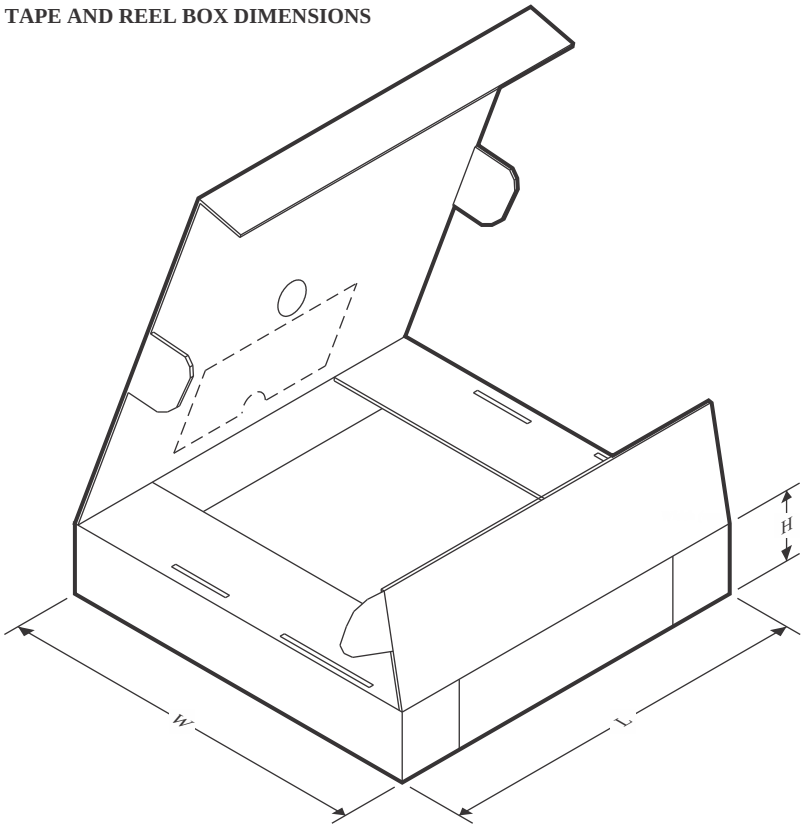

*All dimensions are nominal

Device	Package Type	Package Drawing	Pins	SPQ	Length (mm)	Width (mm)	Height (mm)
TXU0104BQAR	WQFN	BQA	14	3000	210.0	185.0	35.0
TXU0104BQARG4	WQFN	BQA	14	3000	210.0	185.0	35.0
TXU0104DTRR	X2QFN	DTR	12	3000	189.0	185.0	36.0
TXU0104PWR	TSSOP	PW	14	2000	356.0	356.0	35.0
TXU0104PWRG4	TSSOP	PW	14	2000	356.0	356.0	35.0
TXU0104RUTR	UQFN	RUT	12	3000	189.0	185.0	36.0
TXUN0104RUTR	UQFN	RUT	12	3000	210.0	185.0	35.0

GENERIC PACKAGE VIEW

BQA 14

WQFN - 0.8 mm max height

2.5 x 3, 0.5 mm pitch

PLASTIC QUAD FLATPACK - NO LEAD

This image is a representation of the package family, actual package may vary.
Refer to the product data sheet for package details.

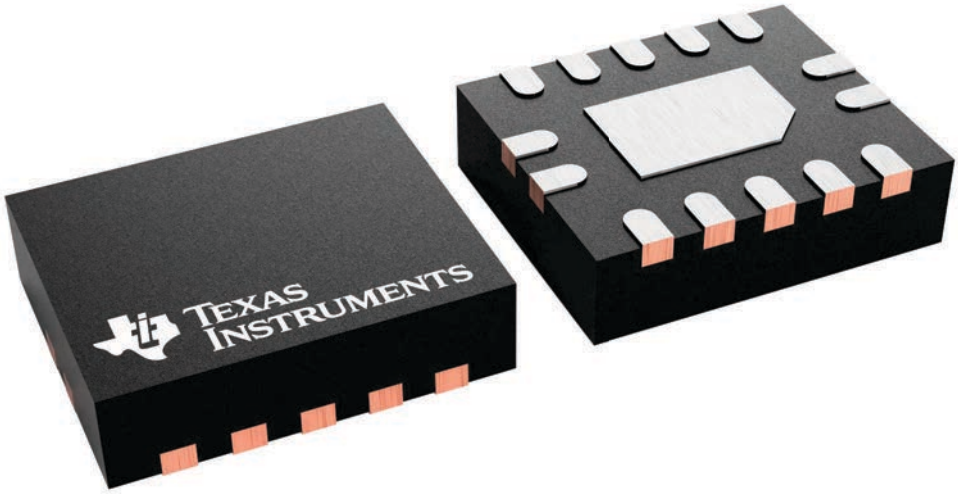

4227145/A

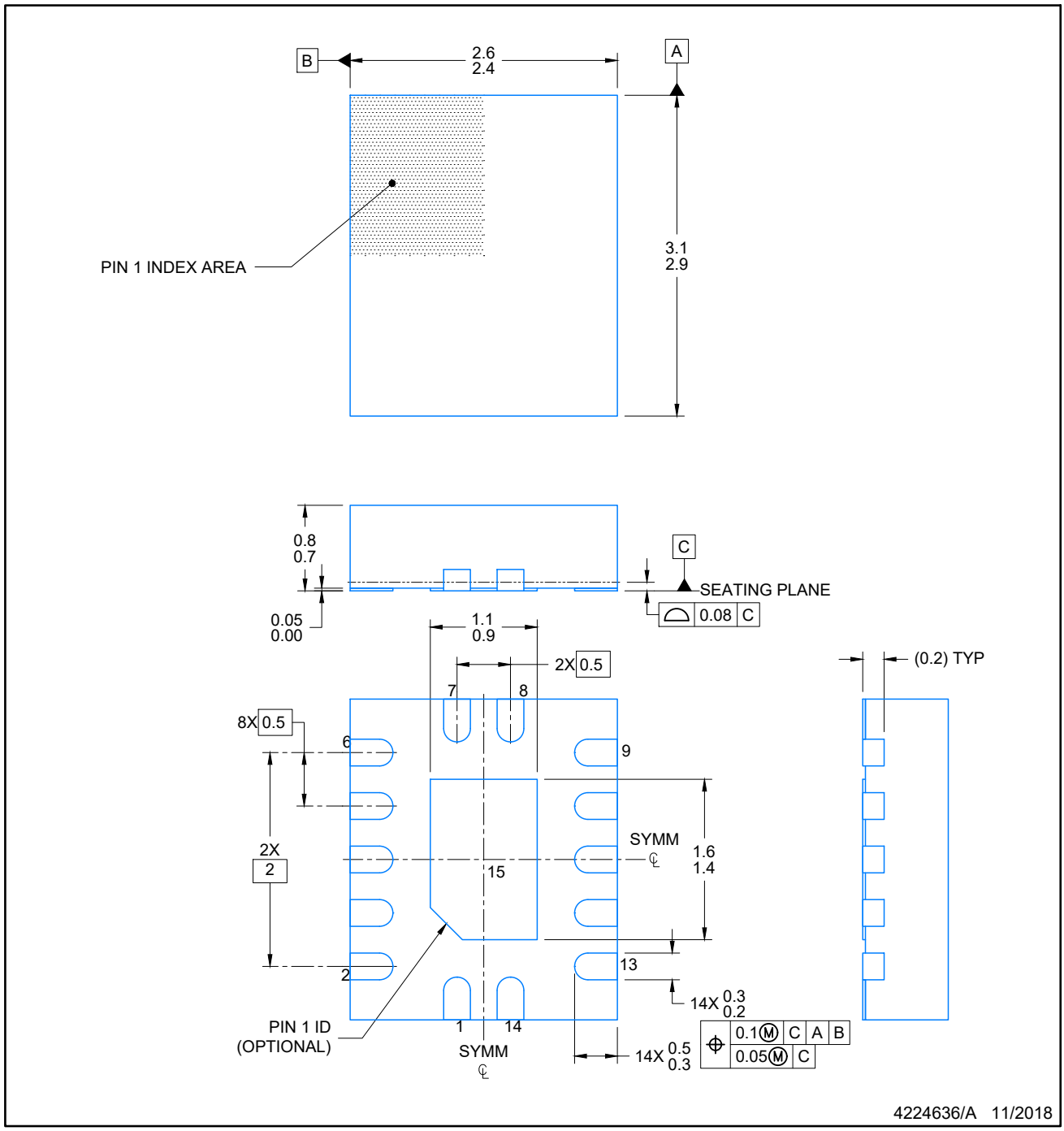

NOTES:

1. All linear dimensions are in millimeters. Any dimensions in parenthesis are for reference only. Dimensioning and tolerancing per ASME Y14.5M.
2. This drawing is subject to change without notice.
3. The package thermal pad must be soldered to the printed circuit board for optimal thermal and mechanical performance.

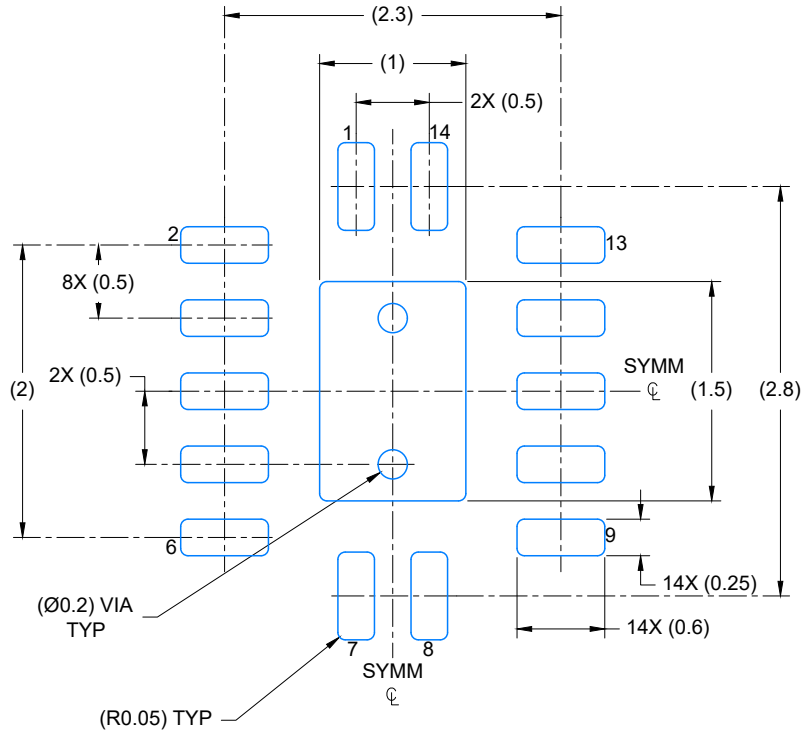

LAND PATTERN EXAMPLE
EXPOSED METAL SHOWN
SCALE: 20X

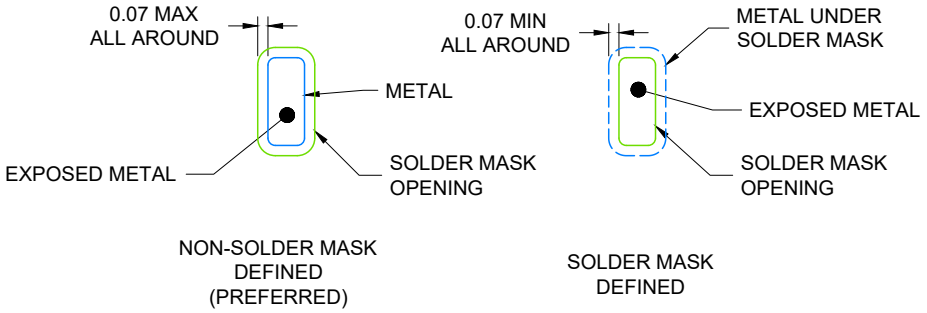

4224636/A 11/2018

NOTES: (continued)

4. This package is designed to be soldered to a thermal pad on the board. For more information, see Texas Instruments literature number SLUA271 (www.ti.com/lit/slua271).
5. Vias are optional depending on application, refer to device data sheet. If any vias are implemented, refer to their locations shown on this view. It is recommended that vias under paste be filled, plugged or tented.

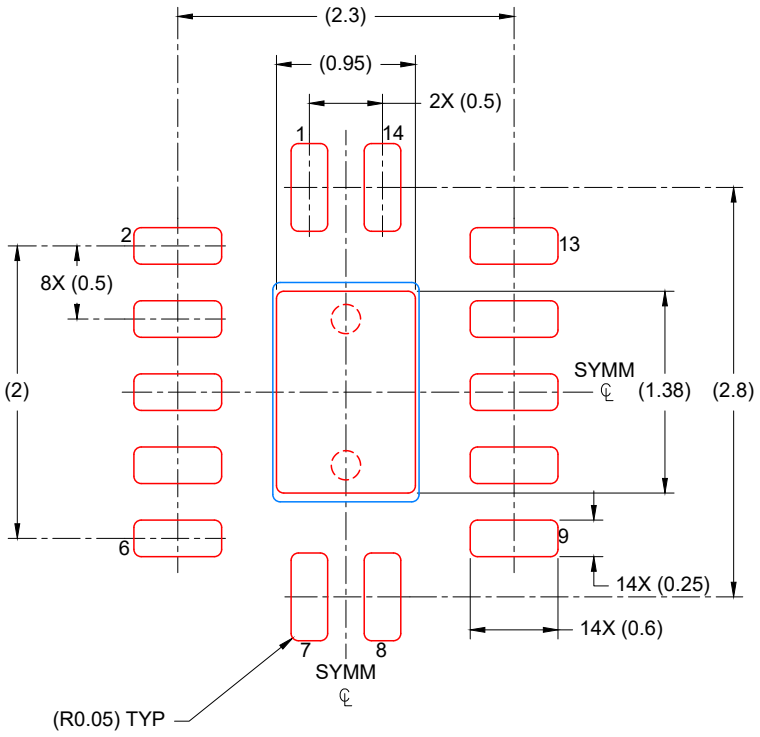

SOLDER PASTE EXAMPLE
BASED ON 0.125 mm THICK STENCIL

EXPOSED PAD
88% PRINTED COVERAGE BY AREA
SCALE: 20X

4224636/A 11/2018

NOTES: (continued)

6. Laser cutting apertures with trapezoidal walls and rounded corners may offer better paste release. IPC-7525 may have alternate design recommendations.

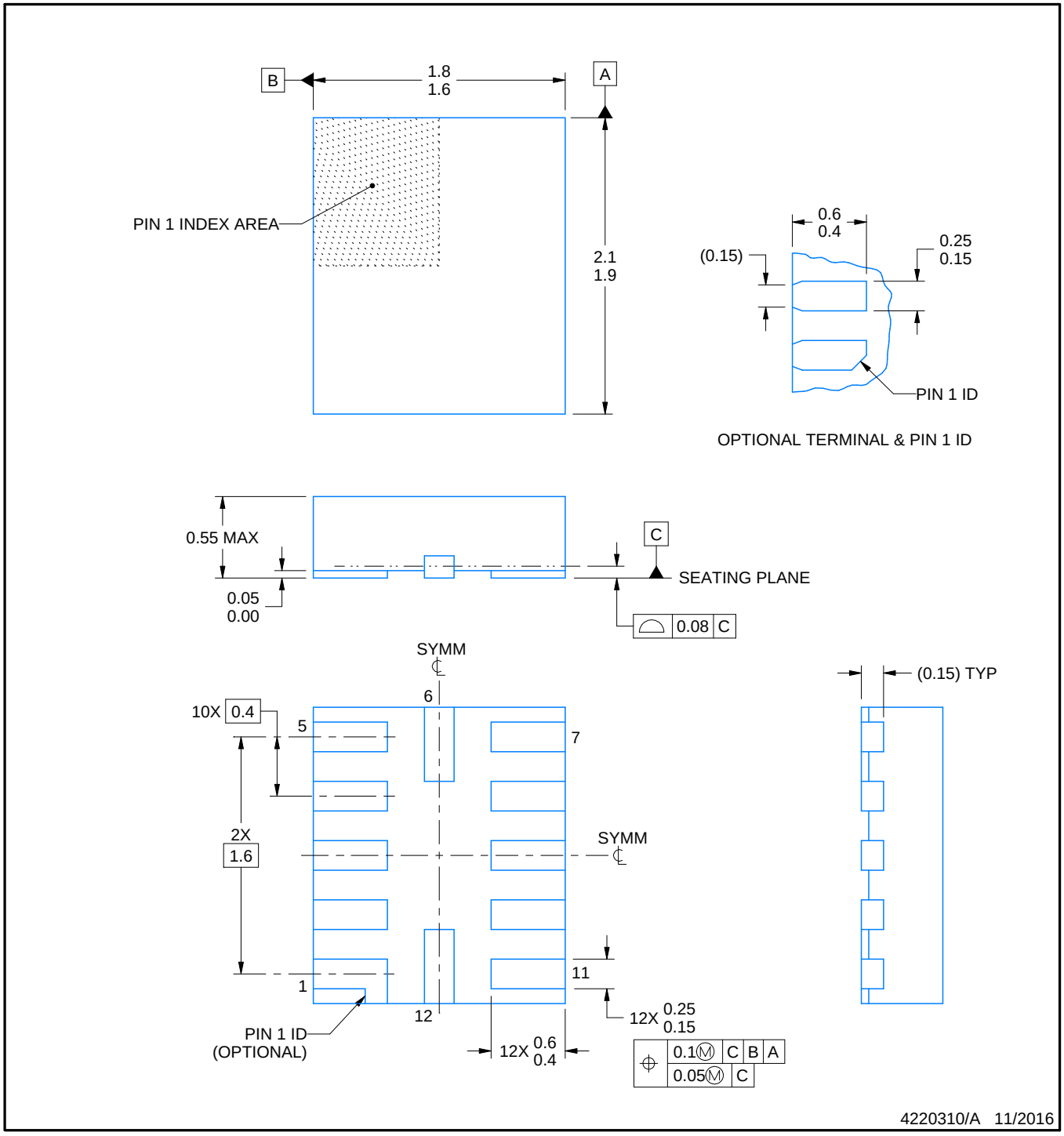

NOTES:

1. All linear dimensions are in millimeters. Any dimensions in parenthesis are for reference only. Dimensioning and tolerancing per ASME Y14.5M.
2. This drawing is subject to change without notice.

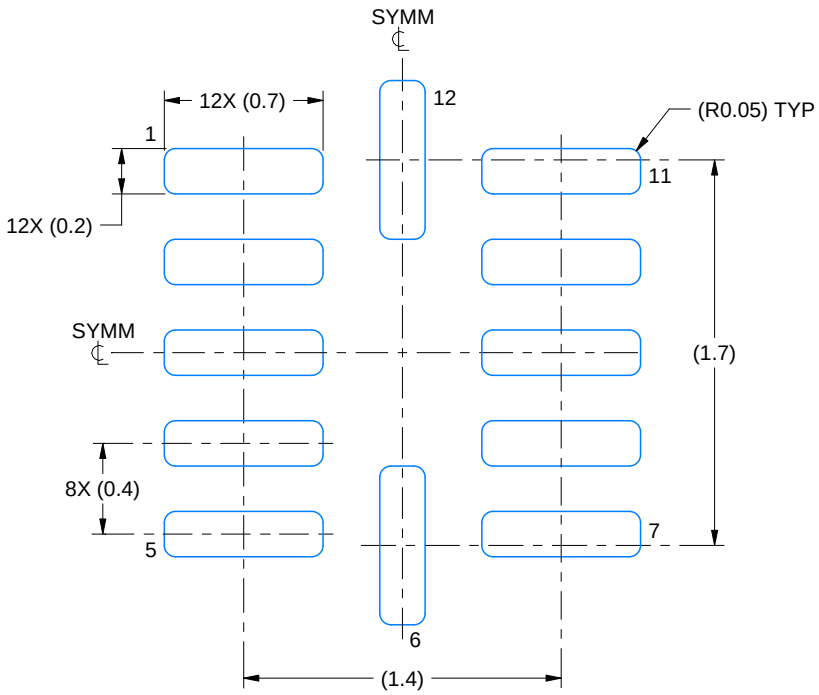

LAND PATTERN EXAMPLE
SCALE:30X

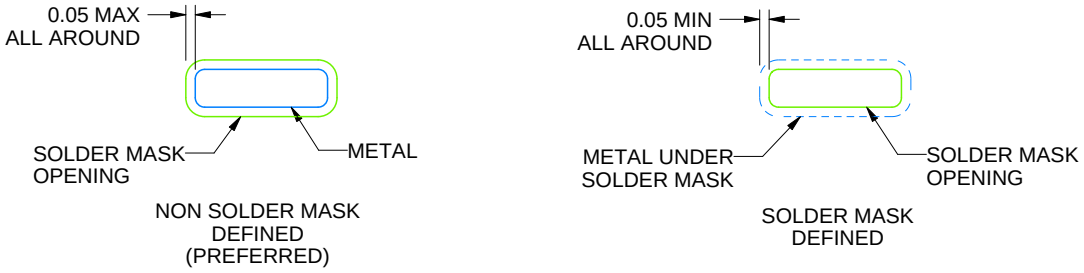

SOLDER MASK DETAILS

4220310/A 11/2016

NOTES: (continued)

3. For more information, see Texas Instruments literature number SLUA271 (www.ti.com/lit/slua271).

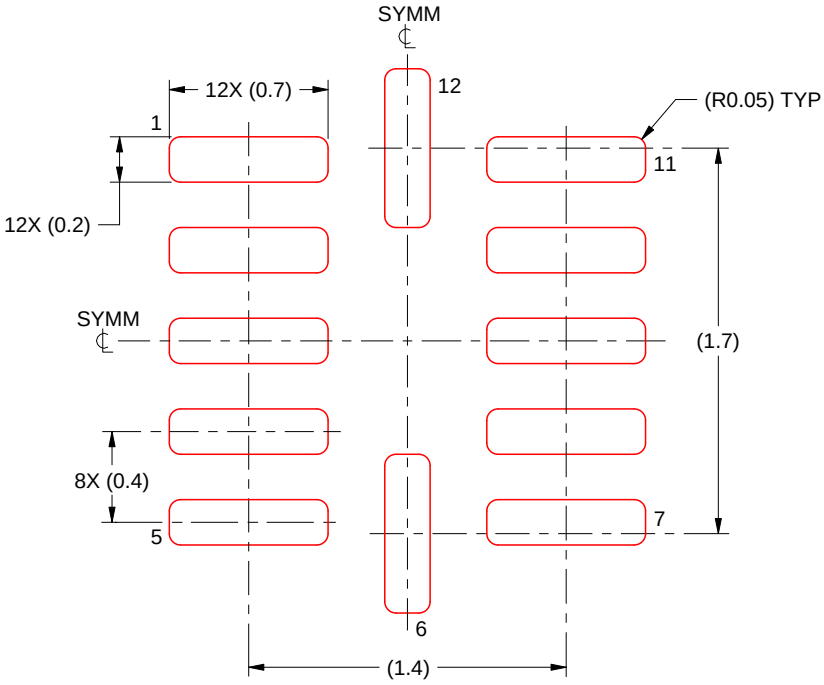

SOLDER PASTE EXAMPLE
BASED ON 0.1 mm THICK STENCIL
SCALE: 30X

4220310/A 11/2016

NOTES: (continued)

4. Laser cutting apertures with trapezoidal walls and rounded corners may offer better paste release. IPC-7525 may have alternate design recommendations.

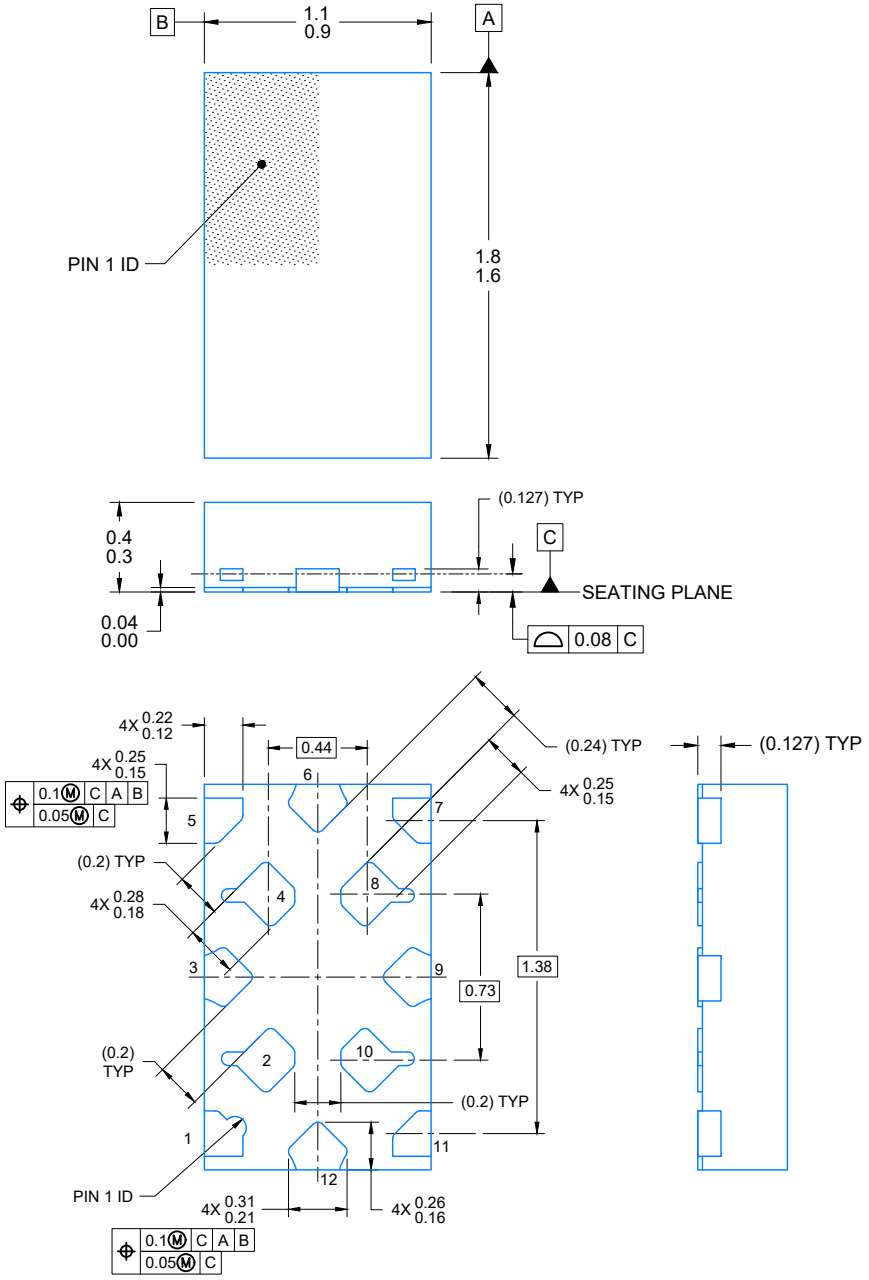

4226527/B 04/2021

NOTES:

1. All linear dimensions are in millimeters. Any dimensions in parenthesis are for reference only. Dimensioning and tolerancing per ASME Y14.5M.
2. This drawing is subject to change without notice.

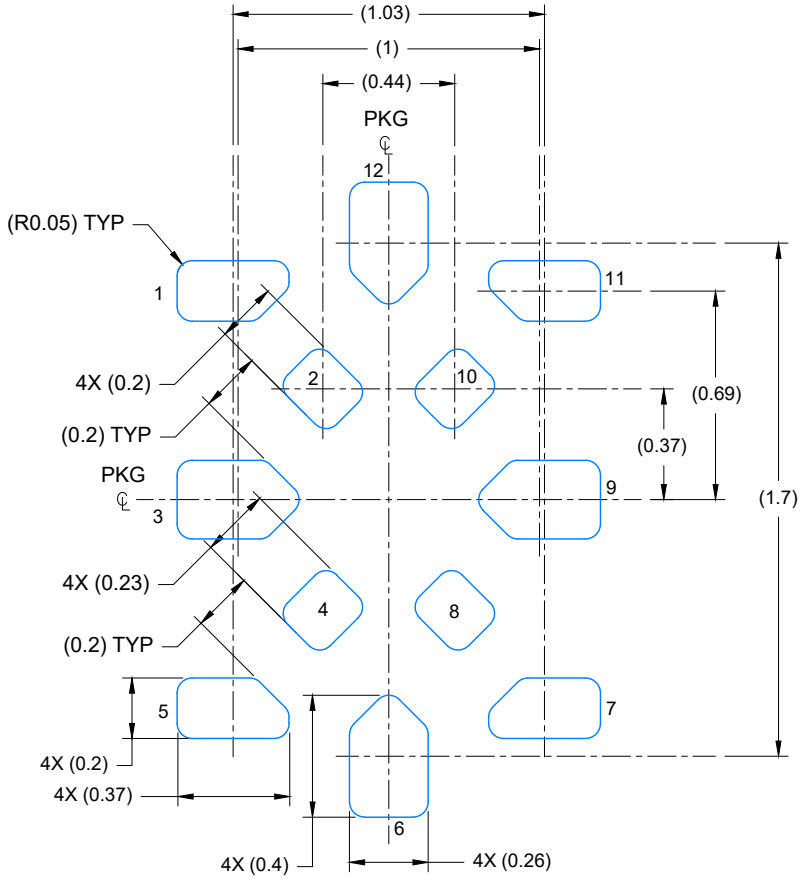

LAND PATTERN EXAMPLE
EXPOSED METAL SHOWN
SCALE: 40X

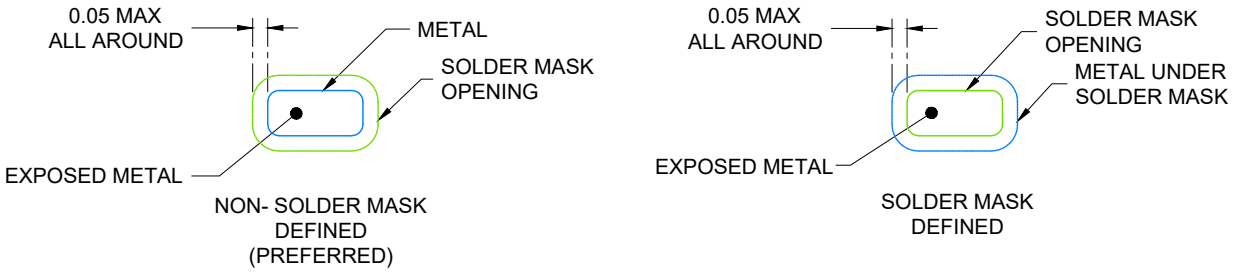

SOLDER MASK DETAILS
NOT TO SCALE

4226527/B 04/2021

NOTES: (continued)

3. For more information, see Texas Instruments literature number SLUA271 (www.ti.com/lit/slua271).
4. Solder mask tolerances between and around signal pads can vary based on board fabrication site.

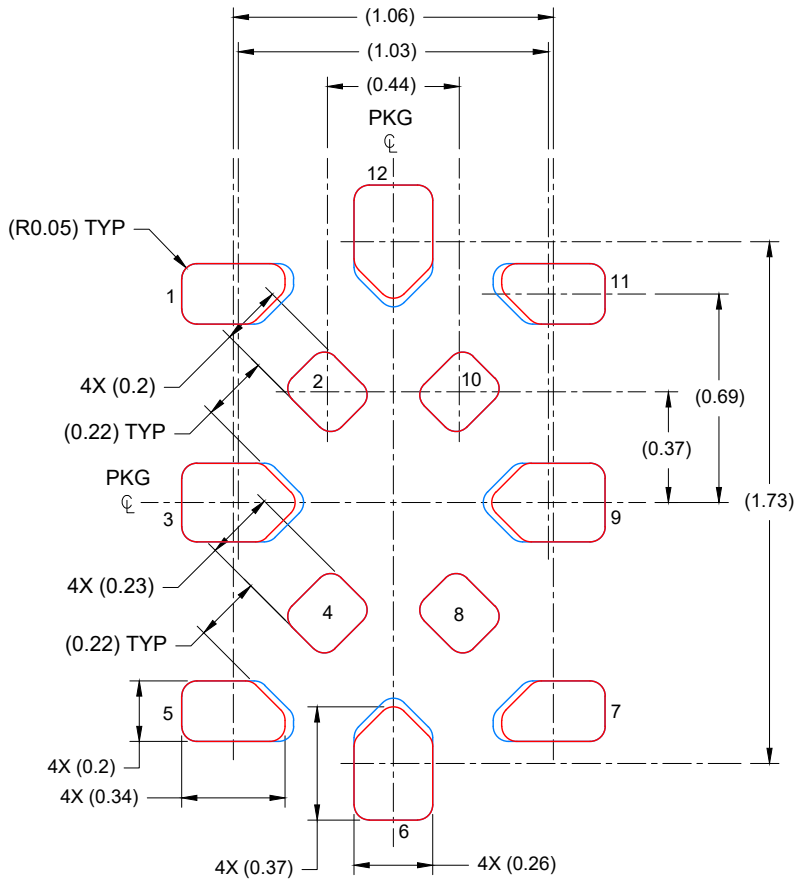

SOLDER PASTE EXAMPLE
BASED ON 0.1 mm THICK STENCIL

SCALE: 40X

4226527/B 04/2021

NOTES: (continued)

5. Laser cutting apertures with trapezoidal walls and rounded corners may offer better paste release. IPC-7525 may have alternate design recommendations.

PW0014A

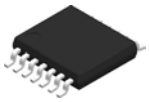

PACKAGE OUTLINE

TSSOP - 1.2 mm max height

SMALL OUTLINE PACKAGE

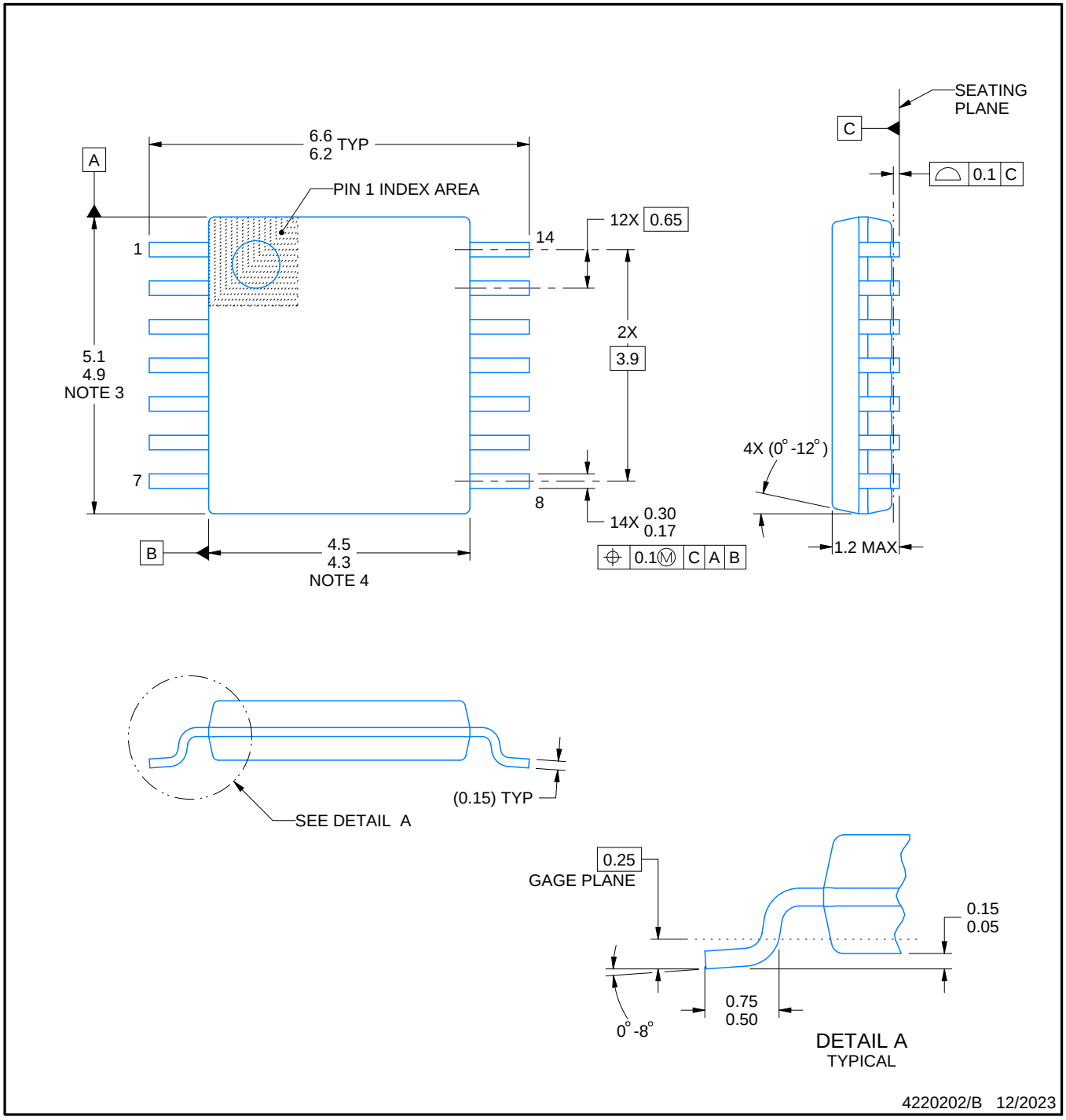

NOTES:

1. All linear dimensions are in millimeters. Any dimensions in parenthesis are for reference only. Dimensioning and tolerancing per ASME Y14.5M.
2. This drawing is subject to change without notice.
3. This dimension does not include mold flash, protrusions, or gate burrs. Mold flash, protrusions, or gate burrs shall not exceed 0.15 mm per side.
4. This dimension does not include interlead flash. Interlead flash shall not exceed 0.25 mm per side.
5. Reference JEDEC registration MO-153.

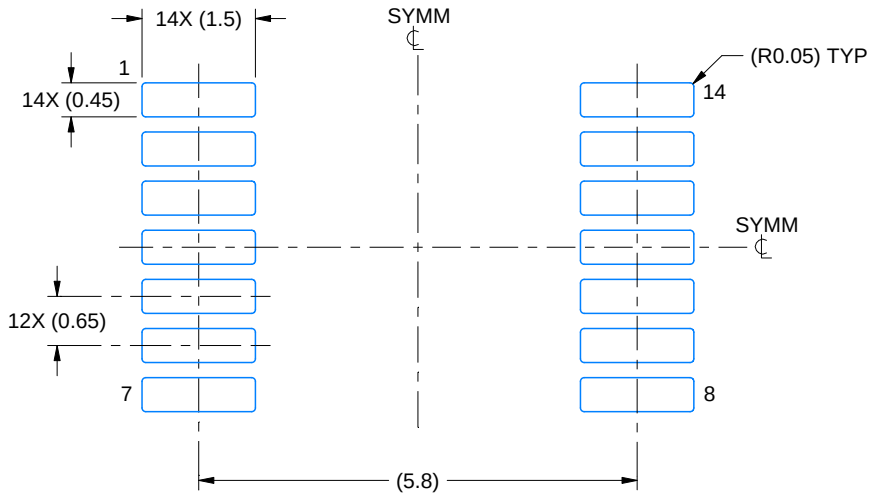

LAND PATTERN EXAMPLE
EXPOSED METAL SHOWN
SCALE: 10X

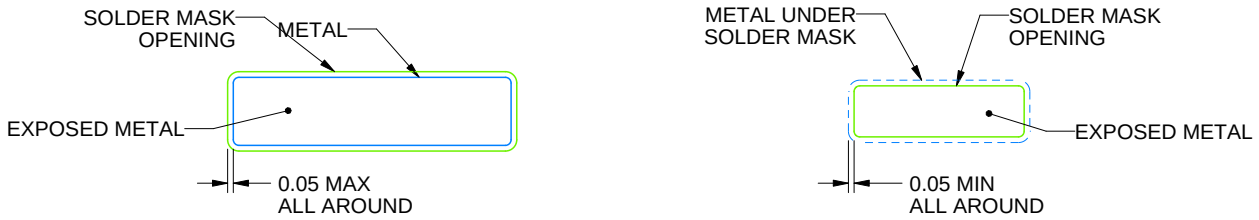

NON-SOLDER MASK DEFINED (PREFERRED)

SOLDER MASK DEFINED

SOLDER MASK DETAILS

4220202/B 12/2023

NOTES: (continued)

6. Publication IPC-7351 may have alternate designs.
7. Solder mask tolerances between and around signal pads can vary based on board fabrication site.

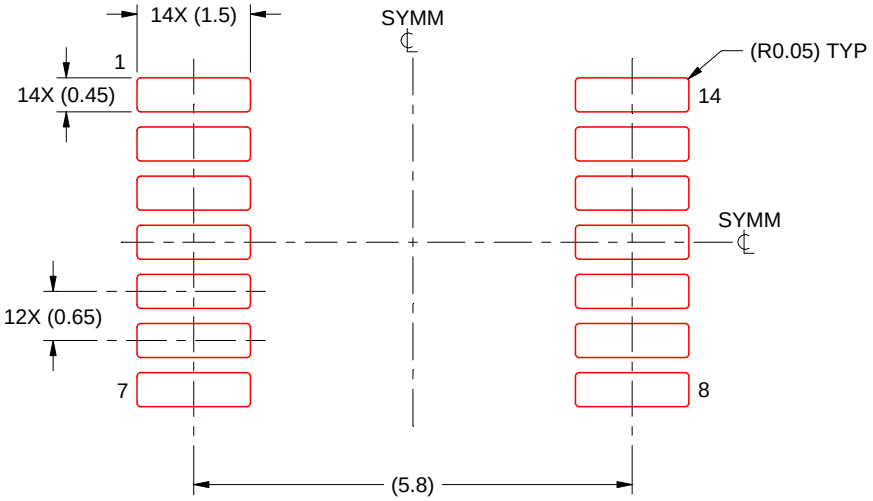

SOLDER PASTE EXAMPLE
BASED ON 0.125 mm THICK STENCIL
SCALE: 10X

4220202/B 12/2023

NOTES: (continued)

8. Laser cutting apertures with trapezoidal walls and rounded corners may offer better paste release. IPC-7525 may have alternate design recommendations.
9. Board assembly site may have different recommendations for stencil design.

IMPORTANT NOTICE AND DISCLAIMER

TI PROVIDES TECHNICAL AND RELIABILITY DATA (INCLUDING DATA SHEETS), DESIGN RESOURCES (INCLUDING REFERENCE DESIGNS), APPLICATION OR OTHER DESIGN ADVICE, WEB TOOLS, SAFETY INFORMATION, AND OTHER RESOURCES “AS IS” AND WITH ALL FAULTS, AND DISCLAIMS ALL WARRANTIES, EXPRESS AND IMPLIED, INCLUDING WITHOUT LIMITATION ANY IMPLIED WARRANTIES OF MERCHANTABILITY, FITNESS FOR A PARTICULAR PURPOSE OR NON-INFRINGEMENT OF THIRD PARTY INTELLECTUAL PROPERTY RIGHTS.

These resources are intended for skilled developers designing with TI products. You are solely responsible for (1) selecting the appropriate TI products for your application, (2) designing, validating and testing your application, and (3) ensuring your application meets applicable standards, and any other safety, security, regulatory or other requirements.

These resources are subject to change without notice. TI grants you permission to use these resources only for development of an application that uses the TI products described in the resource. Other reproduction and display of these resources is prohibited. No license is granted to any other TI intellectual property right or to any third party intellectual property right. TI disclaims responsibility for, and you will fully indemnify TI and its representatives against, any claims, damages, costs, losses, and liabilities arising out of your use of these resources.

TI’s products are provided subject to TI’s Terms of Sale or other applicable terms available either on ti.com or provided in conjunction with such TI products. TI’s provision of these resources does not expand or otherwise alter TI’s applicable warranties or warranty disclaimers for TI products.

TI objects to and rejects any additional or different terms you may have proposed.

Mailing Address: Texas Instruments, Post Office Box 655303, Dallas, Texas 75265
Copyright © 2025, Texas Instruments Incorporated