TPS8804 Smoke Detector AFE

1 Features

- Photo Chamber AFE
  - Dual 8-bit programmable current LED drivers
  - Temperature compensation of LED current
  - Ultra-low offset op-amp for photodiodes
  - Programmable and bypassable gain stage
- Carbon Monoxide Sensor AFE
  - Ultra-low offset gain stage
  - Programmable gain and reference
- Power Management
  - Programmable LDO for external microcontroller
- SLC interface transmitter and receiver
- Ultra-low power consumption
- I^2C serial interface
- Wide input voltage range

2 Applications

- Smoke and CO detector

3 Description

The TPS8804 integrates all of the amplifiers and drivers required for a dual-wave photoelectric smoke detection and carbon monoxide detection system. Its high flexibility is ideal for smoke detection systems where precision and power consumption are critical.

Device Information(1)

PART NUMBER	PACKAGE	BODY SIZE (NOM)
TPS8804	TSSOP (38)	9.7 mm x 4.4 mm

(1) For all available packages, see the orderable addendum at the end of the data sheet.

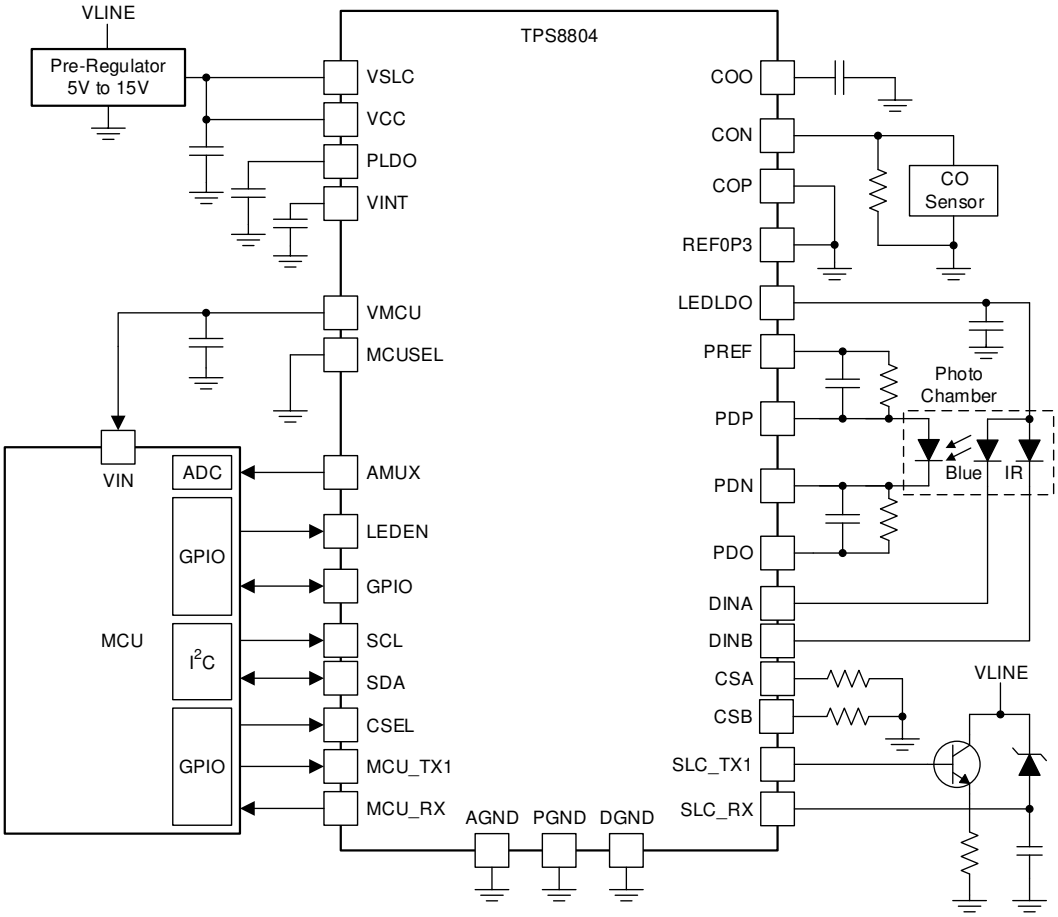

Simplified Application

An IMPORTANT NOTICE at the end of this data sheet addresses availability, warranty, changes, use in safety-critical applications, intellectual property matters and other important disclaimers. PRODUCTION DATA.

Table of Contents

1 Features....1
2 Applications....1
3 Description....1
4 Revision History....2
5 Pin Configuration and Functions....3
Pin Functions....3
6 Specifications....5
6.1 Absolute Maximum Ratings....5
6.2 ESD Ratings....5
6.3 Recommended Operating Conditions....5
6.4 Thermal Information....6
6.5 Electrical Characteristics....6
6.6 Typical Characteristics....16
7 Detailed Description....17
7.1 Overview....17
7.2 Functional Block Diagram....18
7.3 Feature Description....19
7.4 Device Functional Modes....29
7.5 Programming....30
7.6 Register Maps....30
8 Application and Implementation....39
8.1 Application Information....39
8.2 Typical Application....39
9 Power Supply Recommendations....43
10 Layout....44
10.1 Layout Guidelines....44
10.2 Layout Example....44
11 Device and Documentation Support....47
11.1 Receiving Notification of Documentation Updates....47
11.2 Support Resources....47
11.3 Trademarks....47
11.4 Electrostatic Discharge Caution....47
11.5 Glossary....47
12 Mechanical, Packaging, and Orderable Information....48

4 Revision History

NOTE: Page numbers for previous revisions may differ from page numbers in the current version.

Changes from Revision B (March 2021) to Revision C (August 2021)	Page
• Updated Figure 7-3	22
• Added *Connect a capacitor with a value between 1 µF and 100 µF to the LEDLDO.* to Section 7.3.4.2	23
• Updated VCCLOW description in Section 7.6.2	31

Changes from Revision A (March 2020) to Revision B (March 2021)	Page
• Changed typical $I_{MCULDO,Q}$ based on measurement data	6
• Changed typical $I_{CO,Q}$ based on measurement data	6

Changes from Revision * (October 2019) to Revision A (March 2020)	Page
• Changed document status from *Advanced Information* to *Production Data*	1
• Added typical value to $V_{PDIN,OFS}$	6
• Added typical value to $V_{OFFS,CO}$	6
• Added typical value to $V_{MUX,OFFS}$	6

Copyright © 2021 Texas Instruments Incorporated

5 Pin Configuration and Functions

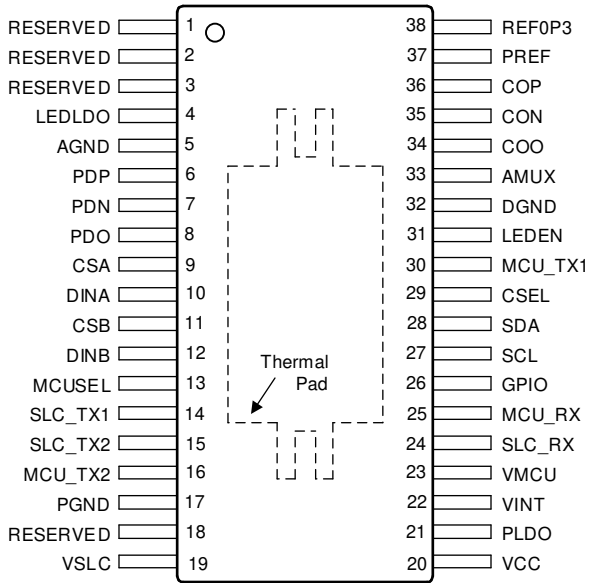

Figure 5-1. DCP Package 38-Pin TSSOP Top View

Pin Functions

PIN		I/O	DESCRIPTION
NAME	NO.		
AGND	5	I	Analog ground. Connect to ground plane.
AMUX	33	O	Analog multiplexer output.
CON	35	I	Negative terminal of CO operational amplifier. Connect to GND if unused.
COO	34	O	Output of CO operational amplifier. Connect to GND if unused.
COP	36	I	Positive terminal of CO operational amplifier. Connect to GND if unused.
CSA	9	I	LED driver A current sense.
CSB	11	I	LED driver B current sense. Connect to GND if unused.
CSEL	29	I	Device address select pin for I^2C serial interface. Pull to GND for I^2C address 0x3F. Pull to VMCU for I^2C address 0x2A. Do not leave floating.
DGND	32	I	Digital ground. Connect to AGND.
DINA	10	I	LED driver A current sink. Connect to cathode of LED.
DINB	12	I	LED driver B current sink. Connect to cathode of LED. Connect to GND if unused.
GPIO	26	I/O	Multi-purpose digital input and output.
LEDEN	31	I	LED driver enable. Do not leave floating while device is powered.
LEDLDO	4	O	LDO output for charging LED supply capacitor. Connect to GND if unused.
MCU_RX	25	O	SLC interface output for receiving data from VLINE.
MCU_TX1	30	I	Primary SLC interface input for transmitting data to VLINE.
MCU_TX2	16	I	Secondary SLC interface input for transmitting data to VLINE.
MCUSEL	13	I	Default MCULDO voltage selection input. Leave floating for VMCU = 3.3 V. Tie to VINT for VMCU = 2.5 V. Tie to GND for VMCU = 1.8 V. Connect to GND with 620-Ω resistor for VMCU = 1.5 V.
PDN	7	I	Photo input amplifier negative input. Connect to cathode of photodiode.
PDO	8	O	Photo input amplifier output pin.
PDP	6	I	Photo input amplifier positive Input. Connect to anode of photodiode.
PGND	17	I	Power ground connection . Connect to AGND.

Copyright © 2021 Texas Instruments Incorporated

PIN		I/O	DESCRIPTION
NAME	NO.		
PLDO	21	O	Capacitor connection to PLDO regulator.
PREF	37	O	Photo reference voltage and output for testing CO sensor connectivity.
REF0P3	38	O	300mV reference. Connect to GND if unused.
RESERVED	1, 2, 3, 18	N/A	Connect to GND.
SCL	27	I	Clock input for I^2C serial interface.
SDA	28	I/O	Data line for I^2C serial interface.
SLC_RX	24	I	SLC interface input for receiving data from VLINE.
SLC_TX1	14	O	Primary SLC interface output for transmitting data to VLINE.
SLC_TX2	15	O	Secondary SLC interface output for transmitting data to VLINE.
VCC	20	I	Input supply pin.
VINT	22	O	Capacitor connection to internal supply LDO.
VMCU	23	I/O	LDO supply for external microcontroller and internal IO buffers.
VSLC	19	I	SLC transmitter supply.
Thermal Pad	39	N/A	Metal connection for thermal dissipation. Connect to ground plane.

Copyright © 2021 Texas Instruments Incorporated

6 Specifications

6.1 Absolute Maximum Ratings

over operating free-air temperature range (unless otherwise noted)[(1)]

PARAMETER		MIN	MAX	UNIT
Power IO	SLC_TX1, SLCTX_2, VCC, VSLC	–0.3	16.5	V
Analog IO	DINA, DINB, LEDLDO	–0.3	12	V
Analog connections	AMUX, CON, COO, COP, PREF, MCUSEL, PDO, REF0P3	–0.3	VINT + 0.3 or 3.6, whichever is lower	V
LDO outputs	VINT, VMCU	–0.3	PLDO + 0.3 or 3.6, whichever is lower	V
LED current sense	CSA	–0.3	DINA + 0.3 or 3.6, whichever is lower	V
LED current sense	CSB	–0.3	DINB + 0.3 or 3.6, whichever is lower	V
Photo amplifier inputs	PDN, PDP	–0.3	3.6	V
PLDO voltage	PLDO	–0.3	7.0	V
SLC receiver	SLC_RX	–0.3	18	V
Digital IO	CSEL, GPIO, LEDEN, MCU_RX, MCU_TX1, MCU_TX2, SCL, SDA	–0.3	VMCU + 0.3 or 3.6, whichever is lower	V
Max operating ambient temperature	T_A	-40	125	°C
Max operating junction temperature	T_J	-40	125	°C

(1) Stresses beyond those listed under *Absolute Maximum Rating* may cause permanent damage to the device. These are stress ratings only, which do not imply functional operation of the device at these or any other conditions beyond those indicated under *Recommended Operating Condition*. Exposure to absolute-maximum-rated conditions for extended periods may affect device reliability.

6.2 ESD Ratings

over operating free-air temperature range (unless otherwise noted)

			Value	UNIT
$V_{(ESD)}$	Electrostatic discharge	Human-body model (HBM), per ANSI/ESDA/JEDEC JS-001 [1]	±3000	V
		Charged-device model (CDM), per JEDEC specification JESD22-C101 [2]	±1500	

6.3 Recommended Operating Conditions

over operating free-air temperature range (unless otherwise noted)

PARAMETER		MIN	MAX	UNIT
SLC transmitter supply	VSLC	4.5	15.6	V
Power supply	VCC	2.6	15.6	V
LED driver	DINA, DINB	0	11.5	V
SLC receiver	SLC_RX	0	17	V

[1] JEDEC document JEP155 states that 500-V HBM allows safe manufacturing with a standard ESD control process.
[2] JEDEC document JEP157 states that 250-V CDM allows safe manufacturing with a standard ESD control process.

Copyright © 2021 Texas Instruments Incorporated

over operating free-air temperature range (unless otherwise noted)

PARAMETER		MIN	MAX	UNIT
Digital IO	CSEL, GPIO, LEDEN, MCU_RX, MCU_TX1, MCU_TX2, SCL, SDA	0	VMCU	V
Digital IO supply	VMCU	1.425	3.6	V
Ambient temperature	T_A	–40	85	°C
Junction temperature	T_J	–40	85	°C

6.4 Thermal Information

THERMAL METRIC[1]		TPS8804 DCP 38 PINS	UNIT
$R_{\theta JA}$	Junction-to-ambient thermal resistance	29.3	°C/W
$R_{\theta JC(top)}$	Junction-to-case (top) thermal resistance	20.0	°C/W
$R_{\theta JB}$	Junction-to-board thermal resistance	10.1	°C/W
Ψ_{JT}	Junction-to-top characterization parameter	0.3	°C/W
Ψ_{JB}	Junction-to-board characterization parameter	10.0	°C/W
$R_{\theta JC(bot)}$	Junction-to-case (bottom) thermal resistance	2.2	°C/W

(1) For more information about traditional and new thermal metrics, see the Semiconductor and IC Package Thermal Metrics application report.

6.5 Electrical Characteristics

over operating free-air temperature range (unless otherwise noted)

PARAMETER		TEST CONDITIONS	MIN	TYP	MAX	UNIT
INPUT VOLTAGE AND CURRENTS						
V_{PWRUP}	Power up threshold. Note: Device enters active state when MCU_PG=1.	VCC rising	1.2	1.55	2.0	V
$V_{PWRDOWN}$	Power down threshold	VCC falling	0.932	1.15	2.0	V
$V_{PWR, HYS}$	VCC power up to power down hysteresis		6.4	400	580	mV
$V_{VCCLOW, RISE}$	VCC low warning reset threshold	PLDO voltage rising	2.35	2.54	2.7	V
		Deglitch time	110	141	172	µs
$V_{VCCLOW, FALL}$	VCC low warning assert threshold	PLDO voltage falling	2.15	2.42	2.6	V
		Deglitch time	110	141	172	µs
$I_{STANDBY}$	Standby Supply Current	All blocks that can be disabled are off, T_J=27C, VCC=3V, VMCU=1.8V		3.8	4.4	µA
		All blocks that can be disabled are off, T_J=27C, VCC=9V, VMCU=3.3V		7.7	9.1	µA
POWER LDO						
V_{PLDO}	Output Voltage	VCC = 2.0 V, I_{PLDO} = 10 mA	1.93	1.96	1.99	V
		VCC = 2.0 V, I_{PLDO} = 30 mA	1.8	1.89	1.95	V
		VCC = 3.3 V, I_{PLDO} = 30 mA	3.1	3.22	3.3	V
		VCC = 9 V, I_{PLDO} = 30 mA	4.1	4.9	6.7	V
		VCC = 11.5 V, I_{PLDO} = 30 mA	4.1	5	6.7	V
C_{PLDO}	PLDO capacitor required for stability		0.7	1	1.3	µF

Copyright © 2021 Texas Instruments Incorporated

over operating free-air temperature range (unless otherwise noted)

PARAMETER		TEST CONDITIONS	MIN	TYP	MAX	UNIT
INTERNAL LDO						
V_{INTLDO}	Output Voltage	I_{VINT} < 10 mA	2.25	2.3	2.35	V
		I_{VINT} < 10 uA, T>80C	2.25	2.3	2.40	V
	DC Output Voltage Accuacy	No external/internal load, VCC = 2.6 V - 11.5 V	–2		2	%
	Line Regulation	VCC = 2.6 V-11.5 V, IOUT = 10 mA	–2		2	%
	Load Regulation	I_{VINT} = 0 mA - 10 mA, VCC = 3 V	–2		2	%
	Transient regulation	I_{VINT} stepped from 0 mA to 10 mA in 1us	–8		8	%
		I_{VINT} stepped from 10 mA to 0 mA in 1us	–5		5	%
	PSRR	V_{IN} = 3.0 V, I_{OUT} = 10 mA, f = 60 Hz (200 mVpp)	50			dB
$I_{INTLDO, OUT}$	Output current range		0		10	mA
$I_{INTLDO, SC}$	Short Circuit Current Limit		30	280	500	mA
$V_{INTLDO, DO}$	Dropout Voltage	From PLDO to VINT, I_{VINT} = 10 mA, PLDO = 2.2 V		52	66	mV
$C_{INTLDO, OUT}$	Output Capacitor	Ceramic	0.7	1	1.3	µF
	ESR of Output Capacitor				100	mΩ
MCU LDO						
V_{MCULDO}	Output Voltage[1]	I_{MCULDO} < 30 mA, V_{CC} > 2.2 V, VMCUSET = 00 (T < 80°C for no load)	1.425	1.5	1.575	V
		I_{MCULDO} < 10 uA, V_{CC} > 2.2 V, VMCUSET = 00, T > 80°C	1.425	1.5	1.65	V
		I_{MCULDO} < 30 mA, V_{CC} > 2.6 V, VMCUSET = 01 (T < 80°C for no load)	1.71	1.8	1.89	V
		I_{MCULDO} < 10 uA, V_{CC} > 2.6 V, VMCUSET = 01, T > 80°C	1.71	1.8	1.98	V
		I_{MCULDO} < 30 mA, V_{CC} > 3.65 V, VMCUSET = 10 (T < 80°C for no load)	2.38	2.5	2.63	V
		I_{MCULDO} < 10 uA, V_{CC} > 3.65 V, VMCUSET = 10, T > 80°C	2.38	2.5	2.75	V
		I_{MCULDO} < 10 mA, V_{CC} > 3.65 V, VMCUSET = 11 (T < 80°C for no load)	3.13	3.3	3.47	V
		I_{MCULDO} < 10 uA, V_{CC} > 4.5 V, VMCUSET = 11, T > 80°C	3.13	3.3	3.60	V
		I_{MCULDO} < 50 mA, VCC > 5.5 V, VMCUSET = 11	3.13	3.3	3.47	V
	DC Output Voltage Accuracy	T < 80°C	–5		5	%
$V_{MCULDO,PG}$	MCULDO power good threshold	VMCU rising	75	82	95	%
		VMCU falling	65	78	85	%
I_{MCULDO}	Output Current Range	V_{CC} > 2.2 V, VMCUSET = 00	0		30	mA
		V_{CC} > 2.6 V, VMCUSET = 01	0		30	mA
		V_{CC} > 3.65 V, VMCUSET = 10	0		30	mA
		V_{CC} > 4.5 V, VMCUSET = 11	0		50	mA

over operating free-air temperature range (unless otherwise noted)

PARAMETER		TEST CONDITIONS	MIN	TYP	MAX	UNIT
$V_{MCULDO, TR}$	MCULDO load transient regulation	I_{MCULDO} stepped from 0 mA to 10 mA in 1us, T < 80°C	–7		7	%
		I_{MCULDO} stepped from 0 mA to 10 mA in 1us, T > 80°C	–8		8	%
		I_{MCULDO} stepped from 10 mA to 0 mA in 1us, T < 80°C	–5		5	%
		I_{MCULDO} stepped from 10 mA to 0 mA in 1us, T > 80°C	–8		8	%
$I_{MCULDO, SC}$	Short Circuit current limit		72	162	253	mA
$t_{MCULDO, PWR}$	Power Up Time	C_{MCULDO} = 1µF, time from VMCU=0V to 90% of target voltage		600	1100	µs
$T_{MCULDO, PG}$	MCULDO power good deglitch time		92	125	158	µs
$T_{MCULDO, MASK}$	MCULDO low voltage error mask time. MCULDO_ERR is masked for T_MCULDO,MASK after VMCUSET or MCU_DIS is changed.			10		ms
$I_{MCULDO, Q}$	Quiescent Current	I_{MCULDO} = 0µA		2.04	3	µA
C_{MCULDO}	Output Capacitor	Ceramic	0.7	1	10	µF
	ESR of Output Capacitor				100	mΩ
R_{MCUSEL}	MCUSEL component requirements. Not tested in production	Pull-down resistance to set VMCUSET[1:0]=00 on powerup	558	620	682	Ω
		Pull-down resistance to set VMCUSET[1:0]=01 on powerup	0		10	Ω
		Pull-up resistance to VINT to set VMCUSET[1:0]=10 on powerup	0		10	Ω
		Capacitance to set VMCUSET[1:0]=11 on powerup	300		1000	pF
PHOTO CHAMBER INPUT STAGE AMPLIFIER						
V_{PDO}	Output voltage range	PAMP_EN=1, Feedback network: 1.5M Ω, 10pF	0		0.5	V
$f_{PDIN, BW}$	Unity Gain Bandwidth		1		5	MHz
$V_{PDIN, OFS}$	Input Offset Voltage		-530	-195	240	µV
$V_{PDO, OFS}$	Output Offset Voltage	50mV applied to PDP with 1.5MΩ series resistor. 1.5MΩ resistor connects PDN to PDO. Voltage measured between 50mV and PDO.	-10		10	mV
$f_{PDIN, CHOP}$	Chop Frequency			2		MHz
$T_{PDIN, SET}$	Input amplifier settling time. Time between stepping the current and measuring 90% of the final value + 10% of the initial value at PDO	Feedback network: 1.5M Ω, 10pF. 1 nA to 10 nA applied from PDN to PDP. 0V reference	0	30	40	µs
		Feedback network: 1.5MΩ, 5pF. 1.5MΩ connected from PDP to PREF. 1 nA to 10 nA applied from PDN to PDP. PREF_SEL=1	0	20	40	µs

Copyright © 2021 Texas Instruments Incorporated

over operating free-air temperature range (unless otherwise noted)

PARAMETER		TEST CONDITIONS	MIN	TYP	MAX	UNIT
$I_{PDIN, ACT}$	Active current. Current does not include bias block or 8 MHz oscillator.			175	210	µA
PHOTO CHAMBER GAIN STAGE AMPLIFIER						
G_{PGAIN}	Closed Loop Gain Slope (V_{AOUT_PH2}-V_{AOUT_PH1})/(V_{SIG2}-V_{SIG1}). Apply V_{SIG1} from PREF to PDO and measure AOUT_PH. Apply V_{SIG2} from COTEST to PDO and measure AOUT_PH	V_{PDO1}=10mV, V_{PDO2}=20mV, PREF_SEL=0, PGAIN[1:0] = 00	4.75	4.9	5.05	V/V
		V_{PDO1}=10mV, V_{PDO2}=20mV, PREF_SEL=0, PGAIN[1:0] = 01	10.67	11	11.33	V/V
		V_{PDO1}=10mV, V_{PDO2}=20mV, PREF_SEL=0, PGAIN[1:0] = 10	19.4	20	20.6	V/V
		V_{PDO1}=10mV, V_{PDO2}=20mV, PREF_SEL=0, PGAIN[1:0] = 11	33.95	35	36.05	V/V
	Closed Loop Gain Slope (V_{AOUT_PH2}-V_{AOUT_PH1})/(V_{SIG2}-V_{SIG1}). Apply V_{SIG1} from PREF to PDO and measure AOUT_PH. Apply V_{SIG2} from PREF to PDO and measure AOUT_PH	V_{SIG1}=10mV, V_{SIG2}=20mV, PREF_SEL=1, PGAIN[1:0] = 00	4.61	4.75	4.89	V/V
		V_{SIG1}=10mV, V_{SIG2}=20mV, PREF_SEL=1, PGAIN[1:0] = 01	10.09	10.4	10.71	V/V
		V_{SIG1}=10mV, V_{SIG2}=20mV, PREF_SEL=1, PGAIN[1:0] = 10	17.94	18.5	19.06	V/V
		V_{SIG1}=10mV, V_{SIG2}=20mV, PREF_SEL=1, PGAIN[1:0] = 11	31.28	32.25	33.22	V/V
$F_{PGAIN, BW}$	Unity Gain Bandwidth		1	5	8	MHz
$V_{PGAIN, OFS}$	Input offset Voltage		-6		5	mV
$T_{PGAIN, SET}$	Gain amplifier settling time. Time between stepping the voltage and measuring 90% of the final value + 10% of the initial value at AOUT_PH	PGAIN[1:0]=00. PDO stepped from 3mV to 30mV. PREF_SEL=0		1.8	2.522	µs
$I_{PGAIN, ACT}$	Active current. Current does not include bias block.	1.0 V input voltage, PGAIN[1:0] = 00, PGAIN_EN = 1		40	70	µA
LED LDO						
V_{LEDLDO}	LEDLDO output voltage range		7.5		10	V
$V_{LEDLDO,ACC}$	LDO output accuracy	I_LEDLDO = 0uA to 100uA	-5		5	%
$V_{LEDLDO, RES}$	LED LDO output step size			0.5		V
$I_{LEDLDO, OUT}$	LDO output current limit		1	3	6	mA
$I_{LEDLDO, Q}$	Quiescent current. Current does not include bias block.			31	60	µA
$V_{LEDLDO, DROP}$	LED LDO dropout voltage	VSLC=7V, I_{LEDLDO}=100uA		565	1000	mV
LED DRIVER A						
$N_{PDACA, RES}$	Resolution			8		Bits

over operating free-air temperature range (unless otherwise noted)

PARAMETER		TEST CONDITIONS	MIN	TYP	MAX	UNIT
V_{CSA}	CSA output voltage	T_J = 27°C TEMPCOA[1:0] = 00, PDAC_A = 00, R_{CSA}=1 kOhms, V_{DINA}=3V	274	299	323	mV
		T_J = 27°C TEMPCOA[1:0] = 00, PDAC_A = FF, R_{CSA}=1 kOhms, V_{DINA}=3V	567	593	619	mV
		T_J = 27°C TEMPCOA[1:0] = 01, PDAC_A = 00, R_{CSA}=1 kOhms, V_{DINA}=3V	252	277	301	mV
		T_J = 27°C TEMPCOA[1:0] = 01, PDAC_A = FF, R_{CSA}=1 kOhms, V_{DINA}=3V	546	572	597	mV
		T_J = 27°C TEMPCOA[1:0] = 10, PDAC_A = 00, R_{CSA}=1 kOhms, V_{DINA}=3V	164	188	213	mV
		T_J = 27°C TEMPCOA[1:0] = 10, PDAC_A = FF, R_{CSA}=1 kOhms, V_{DINA}=3V	458	484	510	mV
		T_J = 27°C TEMPCOA[1:0] = 11, PDAC_A = 00, R_{CSA}=1 kOhms, V_{DINA}=3V	54	79	104	mV
		T_J = 27°C TEMPCOA[1:0] = 11, PDAC_A = FF, R_{CSA}=1 kOhms, V_{DINA}=3V	350	376	403	mV
$V_{PDACA, STEP}$	DAC step size			1.18		mV
	INL		-10		10	LSB
	DNL		-1.5		1.5	LSB
$t_{PDACA, SET}$	Settling Time			1	5	µs
$K_{PDACA, COMP}$	CSA temperature compensation coefficient	TEMPCOA[1:0] = 00, PDAC_A[7:0] = 0x00, R_{CSA}=1 kOhms, V_{DINA}=3V, T_J=0°C, 50°C	0.174	0.347	0.521	mV/°C
		TEMPCOA[1:0] = 01, PDAC_A[7:0] = 0x00, R_{CSA}=1 kOhms, V_{DINA}=3V, T_J=0°C, 50°C	0.208	0.416	0.624	mV/°C
		TEMPCOA[1:0] = 10, PDAC_A[7:0] = 0x00, R_{CSA}=1 kOhms, V_{DINA}=3V, T_J=0°C, 50°C	0.346	0.693	1.039	mV/°C
		TEMPCOA[1:0] = 11, PDAC_A[7:0] = 0x00, R_{CSA}=1 kOhms, V_{DINA}=3V, T_J=0°C, 50°C	0.520	1.040	1.560	mV/°C
$V_{DINA, DROP}$	Dropout voltage. Voltage required between DINA and CSA for current regulation.	PLDO=3.6V, R_{CSA}=820mΩ, TEMPCOA[1:0]=11, PDAC_A[7:0]=0x28, T_J=27°C (I_LED≈158mA, 0.8% temp coefficient)			300	mV
		PLDO=3.6V, R_{CSA}=820mΩ, TEMPCOA[1:0]=01, PDAC_A[7:0]=0x79, T_J=27°C (I_LED≈507mA, 0.1% temp coefficient)			500	mV
I_{DINA}	LED current		0		550	mA
LED DRIVER B						
$N_{PDACB, RES}$	Resolution			8		Bits

Copyright © 2021 Texas Instruments Incorporated

over operating free-air temperature range (unless otherwise noted)

PARAMETER		TEST CONDITIONS	MIN	TYP	MAX	UNIT
V_{CSB}	CSB output voltage	T_J = 27°C TEMPCOB[1:0] = 00, PDAC_B = 00, R_{CSB}=1 kOhms, V_{DINB}=3V	271	299	327	mV
		T_J = 27°C TEMPCOB[1:0] = 00, PDAC_B = FF, R_{CSB}=1 kOhms, V_{DINB}=3V	562	594	626	mV
		T_J = 27°C TEMPCOB[1:0] = 01, PDAC_B = 00, R_{CSB}=1 kOhms, V_{DINB}=3V	250	277	305	mV
		T_J = 27°C TEMPCOB[1:0] = 01, PDAC_B = FF, R_{CSB}=1 kOhms, V_{DINB}=3V	541	572	604	mV
		T_J = 27°C TEMPCOB[1:0] = 10, PDAC_B = 00, R_{CSB}=1 kOhms, V_{DINB}=3V	163	189	216	mV
		T_J = 27°C TEMPCOB[1:0] = 10, PDAC_B = FF, R_{CSB}=1 kOhms, V_{DINB}=3V	456	486	516	mV
		T_J = 27°C TEMPCOB[1:0] = 11, PDAC_B = 00, R_{CSB}=1 kOhms, V_{DINB}=3V	55	81	108	mV
		T_J = 27°C TEMPCOB[1:0] = 11, PDAC_B = FF, R_{CSB}=1 kOhms, V_{DINB}=3V	350	379	408	mV
$V_{PDACB, STEP}$	DAC step size			1.18		mV
	INL		-10		10	LSB
	DNL		-1.5		1.5	LSB
$t_{PDACB, SET}$	Settling time			1	5	µs
$K_{PDACB, COMP}$	CSB temperature compensation coefficient	TEMPCOB[1:0] = 00, PDAC[7:0] = 0x00, R_{CSB}=1 kOhms, V_{DINB}=3V, T_J=0°C, 50°C	0.174	0.347	0.521	mV/°C
		TEMPCOB[1:0] = 01, PDAC[7:0] = 0x00, R_{CSB}=1 kOhms, V_{DINB}=3V, T_J=0°C, 50°C	0.208	0.416	0.624	mV/°C
		TEMPCOB[1:0] = 10, PDAC[7:0] = 0x00, R_{CSB}=1 kOhms, V_{DINB}=3V, T_J=0°C, 50°C	0.346	0.693	1.039	mV/°C
		TEMPCOB[1:0] = 11, PDAC[7:0] = 0x00, R_{CSB}=1 kOhms, V_{DINB}=3V, T_J=0°C, 50°C	0.520	1.040	1.560	mV/°C
$V_{DINB, DROP}$	Dropout voltage. Voltage required between DINB and CSB for current regulation.	PLDO=3.6V, R_{CSA}=820mΩ, TEMPCOB[1:0]=11, PDAC[7:0]=0x28, TJ=27°C (I_LED≈158mA, 0.8% temp coefficient)			300	mV
		PLDO=3.6V, R_{CSA}=820mΩ, TEMPCOB[1:0]=01, PDAC[7:0]=0x79, TJ=27°C (I_LED≈507mA, 0.1% temp coefficient)			500	mV
I_{DINB}	LED current		0		550	mA
CO TRANSIMPEDANCE AMPLIFIER						
$R_{I, CO}$	CO input resistance	COSWRI = 1	0.7	1	1.5	kΩ

over operating free-air temperature range (unless otherwise noted)

PARAMETER		TEST CONDITIONS	MIN	TYP	MAX	UNIT
$R_{F, CO}$	CO feedback resistance	COGAIN[1:0] = 00, COSWRG = 1	770	1100	1430	kΩ
		COGAIN[1:0] = 01, COSWRG = 1	210	300	390	kΩ
		COGAIN[1:0] = 10, COSWRG = 1	350	500	650	kΩ
		COGAIN[1:0] = 11, COSWRG = 1	560	800	1040	kΩ
$V_{IN, COP}$	CO amplifier input voltage (COP pin)		0		0.6	V
$V_{IN, CON}$	CO amplifier input voltage (CON pin)		0		0.6	V
$V_{OFFS, CO}$	CO amplifier input offset voltage		-130	94	300	µV
$V_{OUT, COO}$	CO amplifier output voltage (COO pin)		0.1		2	V
$I_{CO, Q}$	CO amplifier quiescent current			0.63	2.1	µA
$f_{CO, BW}$	CO amplifier unity gain bandwidth		5	12	20	kHz
$f_{CO, CHOP}$	CO amplifier chop frequency		3.8	4	4.2	kHz
R_{COO}	CO amplifier output resistance	COSWRO = 1	70	95	130	kΩ
V_{COPREF}	CO amplifier reference voltage	COSWREF=1, COREF[1:0] = 00, T_J = 27°C	0.89	1.14	1.47	mV
		COSWREF=1, COREF[1:0] = 00, T_J = -40°C to 85°C	0.86	1.14	1.66	
		COSWREF=1, COREF[1:0] = 01, T_J = 27°C	1.75	2.23	2.7	
		COSWREF=1, COREF[1:0] = 01, T_J = -40°C to 85°C	1.7	2.23	2.95	
		COSWREF=1, COREF[1:0] = 10, T_J = 27°C	2.6	3.23	4	
		COSWREF=1, COREF[1:0] = 10, T_J = -40°C to 85°C	2.55	3.23	4.24	
		COSWREF=1, COREF[1:0] = 11, T_J = 27°C	3.45	4.43	5.38	
		COSWREF=1, COREF[1:0] = 11, T_J = -40°C to 85°C	3.4	4.43	5.48	
$R_{COTEST, PU}$	COTEST pull up FET resistance		0.36	0.76	1.1	kΩ
$R_{COTEST, PD}$	COTEST pull-down FET resistance		0.25	0.37	0.82	kΩ
SLC INTERFACE						
$t_{SLCRX, DEG}$	SLC receiver deglitch time	SLCRX_EN=1, SLCRX_DEG[1:0]=00	0	0	0.065	ms
		SLCRX_EN=1, SLCRX_DEG[1:0]=01	0.090	0.125	0.160	
		SLCRX_EN=1, SLCRX_DEG[1:0]=10	0.9	1	1.1	
		SLCRX_EN=1, SLCRX_DEG[1:0]=11	19.8	20	20.2	
$I_{SLCRX, Q}$	SLC receiver standby current	SLCRX_EN = 1		0.25	0.5	uA

Copyright © 2021 Texas Instruments Incorporated

over operating free-air temperature range (unless otherwise noted)

PARAMETER		TEST CONDITIONS	MIN	TYP	MAX	UNIT
$V_{SLCRX,IHI}$	SLC receiver input high threshold voltage	SLCRX_HYS=0	1.3	2.0	2.7	V
		SLCRX_HYS=1	1.3	2.0	2.7	V
$V_{SLCRX,ILO}$	SLC receiver input low threshold voltage	SLCRX_HYS=0	0.5	0.8	1.1	V
		SLCRX_HYS=1	1.2	1.8	2.7	V
$V_{SLCRX,HYS}$	SLC receiver input hysteresis	SLCRX_HYS=0	0.7	1.2	1.7	V
		SLCRX_HYS=1	0.01	0.2	0.3	V
$R_{SLCRX,PD}$	SLC receiver input pulldown resistance	SLCRX_PD=1	65	107	165	kΩ
		SLCRX_PD=0	3.5	41	56	MΩ
$V_{SLCTXx\ ,OH}$	SLC transmitter output high voltage	VSLC=11.5V, I_{SLC_TXx}=−16mA	11.0	11.3	11.5	V
$V_{SLCTXx,OL}$	SLC transmitter output low voltage	VSLC=11.5V, I_{SLC_TXx}=16mA	0	0.1	0.5	V
ANALOG MULTIPLEXER						
V_{MUX}	Multiplexer buffer input signal voltage range	AMUX_BYP=0	0.05		2	V
$G_{MUX,\ GAIN}$	Multiplexer bufffer output gain	AMUX_BYP=0	0.99	1	1.01	V/V
$V_{MUX,\ OFFS}$	Multiplexer buffer offset voltage	AMUX_BYP=0	-8	-0.5	8	mV
$t_{MUX,\ EN}$	Multiplexer buffer enable settling time	AMUX_BYP=0, AMUX_SEL stepped from 000 to 011 with PDO=2V, PAMP_EN=0. Time until AMUX reaches 99% of its final value	0	10	15	us
$t_{MUX,\ STEP}$	Multiplexer buffer input step settling time	AMUX_BYP=0, AMUX_SEL=011, PDO stepped from 50mV to 2V, PAMP_EN=0. Time until AMUX reaches 99% of its final value	0	10	15	us
$f_{MUX,\ BW}$	Multiplexer bandwidth	AMUX_BYP=0	0.5	1	25	MHz
$I_{MUX,\ OUT}$	Multiplexer output current	AMUX_BYP=0	–10		10	uA
$I_{MUX,\ Q}$	Multiplexer quiescent current. Current does not include bias block.	AMUX_BYP=0		8.3	50	uA
C_{MUX}	Multiplexer buffer output capacitor required for stability	AMUX_BYP=0	150		1000	pF
OSCILLATOR, REFERENCE SYSTEM						
f_{OSC8}	Oscillator frequency			8		MHz
	Frequency accuracy	T_A = -10°C to 70°C	–3		3	%
f_{OSC32}	Low-power Oscillator frequency			32		kHz
	Frequency accuracy	T_A = -10°C to 70°C	–3		3	%
$T_{TIMEOUT}$	Error timeout time		0.9	1	1.1	s
$I_{REF0P3,\ Q}$	REF0P3 buffer quiescent current	VCC current difference between REF0P3_EN=0 and REF0P3=1. I_{REF0P3}=0 µA		0.38	0.76	µA
C_{REF0P3}	REF0P3 output capacitor required for stability		0.7	1	1.5	nF
$T_{REF0P3,\ SET}$	REF0P3 settling time	From REF0P3 enabled to 99% of final output voltage. C_{REF0P3}=1nF, I_{REF0P3}=0 µA		1	1.8	ms

over operating free-air temperature range (unless otherwise noted)

PARAMETER		TEST CONDITIONS	MIN	TYP	MAX	UNIT
$V_{REF0P3, OUT}$	REF0P3 output voltage	I_{REF0P3} = 10 µA	270	300	330	mV
		I_{REF0P3} = -25 µA	270	300	330	mV
$I_{VCCLOW,Q}$	VCC_LOW monitor quiescent current			0.9	2	uA
IO BUFFERS						
$V_{IO, ILO}$	IO buffer input low threshold	LEDEN, CSEL, MCU_TX1, MCU_TX2, GPIO	0.3×VMCU		0.7× VMCU	V
$V_{IO, IHI}$	IO buffer input high threshold	LEDEN, CSEL, MCU_TX1, MCU_TX2, GPIO	0.3×VMCU		0.7× VMCU	V
$I_{IO, LEAK}$	IO buffer input leakage current	LEDEN			100	nA
		MCU_TX1			100	nA
		CSEL			100	nA
$V_{IO, OL}$	IO buffer output low-level	MCU_RX, GPIO. IIO = 3 mA, VMCU = 1.8 V	0	0.19	0.6	V
		MCU_RX, GPIO. IIO = 1 mA, VMCU = 1.5 V	0	0.20	0.6	V
$V_{IO, OH}$	IO buffer output high-level. Spec is the voltage drop from VMCU (i.e. VMCU - VOH)	MCU_RX, GPIO. I_{IO} = -3 mA, VMCU = 1.8 V	0	0.30	0.6	V
		MCU_RX, GPIO. I_{IO} = -1 mA, VMCU = 1.5 V	0	0.37	0.6	V
$C_{IN, IO}$	Input capacitance	LEDEN, CSEL		2	10	pF
$C_{IN, IO}$	Input capacitance	MCU_TX1, MCU_TX2		2	10	pF
$C_{IN, IO}$	Pin capacitance	MCU_RX, GPIO		2	10	pF
$R_{IO,PD}$	IO pulldown resistor	MCU_RX, GPIO	0.8	10	50	MΩ
THERMAL WARNING						
$T_{WARNING}$	Thermal trip point			110		C
THERMAL SHUTDOWN						
T_{SHTDWN}	Thermal trip point			125		C
	Thermal hysteresis		5	15	20	
$t_{OTS,MASK}$	Thermal error mask time. OTS_ERR is masked for $t_{OTS,MASK}$ after device fully powers up or OTS_EN set to 1			300	350	us
I2C IO						
$V_{I2C,IL}$	Low-level input voltage		-0.5		0.3 × V_{MCU}	V
$V_{I2C,IH}$	High-level input voltage		0.7 × V_{MCU}			V
$V_{I2C,HYS}$	Hysteresis of Schmitt trigger inputs		0.05 × V_{MCU}			V
$V_{I2C,OL}$	Low-level output voltage	3 mA sink current; VMCU >2V	0		0.4	V
		2 mA sink current; VMCU < 2V	0		0.2 × V_{MCU}	V
$I_{I2C,OL}$	Low-level output current	V_{OL} = 0.4 V	2.5			mA
		V_{OL} = 0.6 V	4			mA
$I_{I2C,IN}$	Input current to each I/O pin	0.1V_{MCU} < V_I < 0.9V_{MCUmax}	-10		10	µA
$C_{I2C,IN}$	Capacitance for each I/O pin				10	pF

Copyright © 2021 Texas Instruments Incorporated

over operating free-air temperature range (unless otherwise noted)

PARAMETER		TEST CONDITIONS	MIN	TYP	MAX	UNIT
$t_{I2C,OF}$	Output fall time	From V_{IHmin} to V_{ILmax}, Standard-Mode			250	ns
		From V_{IHmin} to V_{ILmax}, Fast-Mode			250	ns
$t_{I2C,SP}$	Pulse width of spikes that must be suppressed by the input filter		0		50	ns
I2C BUS LINES						
f_{SCL}	SCL clock frequency, Standard-Mode		0		100	kHz
	SCL clock frequency Fast-Mode		0		400	kHz
$t_{HD;STA}$	hold time (repeated) START condition, Standard-Mode	After this period, the first clock pulse is generated.	4			µs
	hold time (repeated) START condition, Fast-Mode	After this period, the first clock pulse is generated.	0.6			µs
$t_{SCL\ ,LOW}$	LOW period of the SCL clock, Standard-Mode		4.7			µs
	LOW period of the SCL clock, Fast-Mode		1.3			µs
$t_{SCL,HIGH}$	HIGH period of the SCL clock, Standard-Mode		4			µs
	HIGH period of the SCL clock, Fast-Mode		0.6			µs
$t_{SU;STA}$	set-up time for a repeated START condition, Standard-Mode		4.7			µs
	set-up time for a repeated START condition, Fast-Mode		0.6			µs
$t_{HD;DAT}$	data hold time, Standard-Mode	CBUS compatible masters	5			µs
$t_{HD;DAT}$		I2C-bus devices	0			µs
$t_{HD;DAT}$	data hold time, Fast-Mode	CBUS compatible masters	0			µs
$t_{HD;DAT}$		I2C-bus devices	0			µs
$t_{SU;DAT}$	data set-up time, Standard-Mode		250			ns
	data set-up time, Fast-Mode		100			ns
$t_{I2C,RISE}$	rise time of both SDA and SCL signals, Standard-Mode				1000	ns
	rise time of both SDA and SCL signals, Fast-Mode		20		300	ns
$t_{I2C,FALL}$	fall time of both SDA and SCL signals, Standard-Mode				300	ns
	fall time of both SDA and SCL signals, Fast-Mode		20 × (VMCU / 5.5 V)		300	ns
$t_{SU;STO}$	set-up time for STOP condition, Standard-Mode		4			µs
	set-up time for STOP condition, Fast-Mode		0.6			µs
t_{BUF}	bus free time between a STOP and START condition, Standard-Mode		4.7			µs
	bus free time between a STOP and START condition, Fast-Mode		1.3			µs

Copyright © 2021 Texas Instruments Incorporated

over operating free-air temperature range (unless otherwise noted)

PARAMETER		TEST CONDITIONS	MIN	TYP	MAX	UNIT
$t_{VD;DAT}$	data valid time, Standard-Mode				3.45	µs
	data valid time, Fast-Mode				0.9	µs
$t_{VD;ACK}$	data valid acknowledge time, Standard-Mode				3.45	µs
	data valid acknowledge time, Fast-Mode				0.9	µs
C_{BUS}	capacitive load for each bus line, Standard-Mode				400	pF
	capacitive load for each bus line, Fast-Mode				250	pF
V_{NL}	noise margin at the LOW level	for each connected device (including hysteresis)	0.1 × V_{MCU}			V
V_{NH}	noise margin at the HIGH level	for each connected device (including hysteresis)	0.2 × V_{MCU}			V

(1) MCU LDO output voltage on power-up is determined by the MCUSEL pin state.

6.6 Typical Characteristics

T_A = 27°C, VCC = 3.65 V

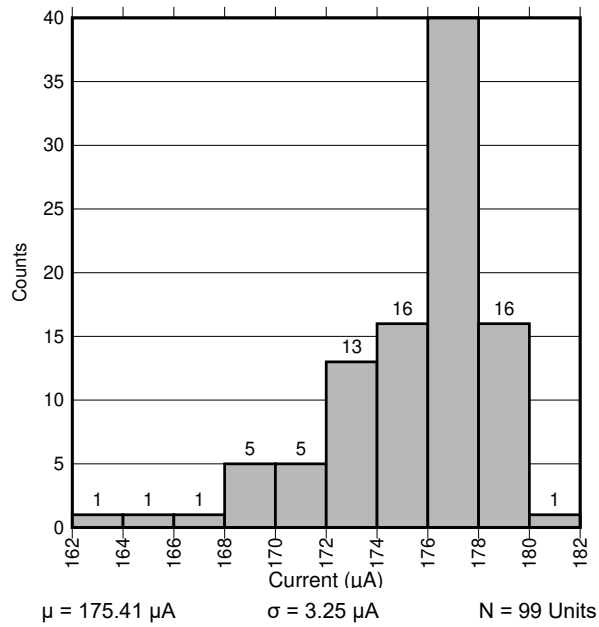

Figure 6-1. 8 MHz Oscillator Current

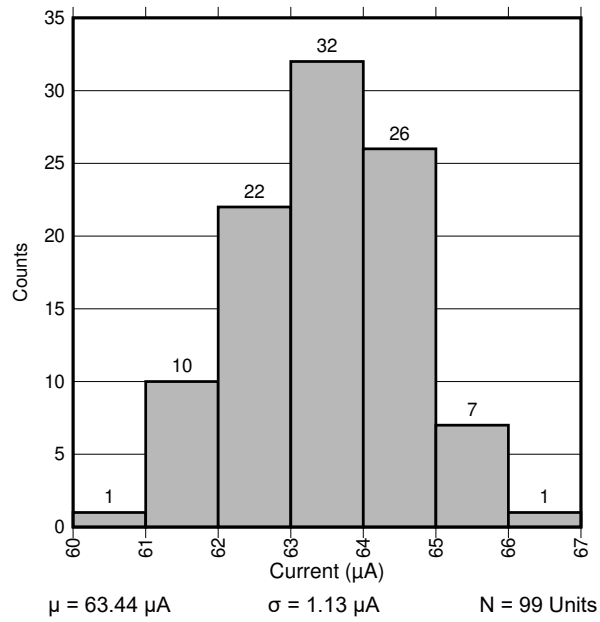

Figure 6-2. Bias Block Current

Copyright © 2021 Texas Instruments Incorporated

7 Detailed Description

7.1 Overview

The TPS8804 integrates an analog supply LDO, digital supply LDO, photoelectric chamber analog front end (AFE), carbon monoxide sensor AFE, SLC interface driver, analog multiplexer, and digital core. The high integration greatly reduces component count in smoke detectors and carbon monoxide detectors. The two LED drivers have highly configurable temperature compensation to support IR and blue LEDs over a wide range of currents. The wide bandwidth of the photo-amplifier saves power due to reduced LED on-time. The CO amplifier has integrated gain resistors. The SLC interface driver connects to the two-wire power line, driving it low and sensing when the line has been pulled low. Each block is highly configurable with the digital core I^2C interface, supporting on-the-fly adjustment of amplifier gains, regulator voltages, and driver currents. Configurable status and interrupt signal registers alert the MCU of fault conditions such as under-voltage, over-temperature, and SLC power alerts.

Copyright © 2021 Texas Instruments Incorporated

7.2 Functional Block Diagram

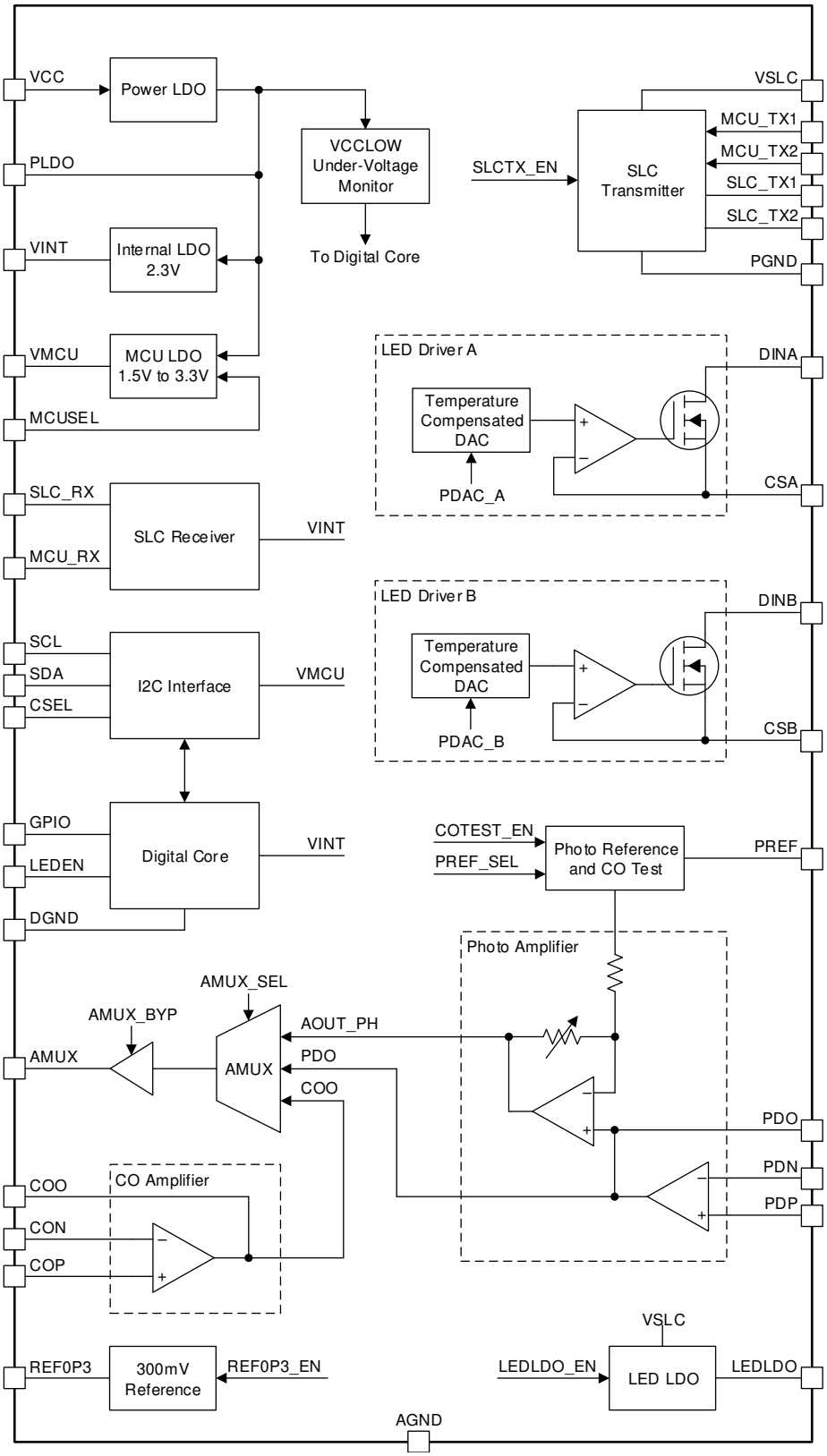

Copyright © 2021 Texas Instruments Incorporated

7.3 Feature Description

7.3.1 System Power-up

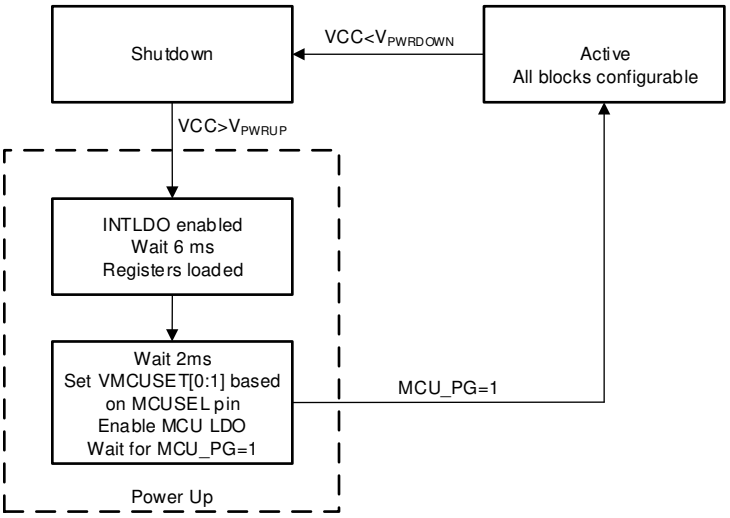

Figure 7-1. Power-up State Diagram

The TPS8804 can power-up from a DC power supply above 3.6 V connected to the VCC pin. When the VCC voltage exceeds the V_{PWRUP} threshold, the TPS8804 initializes for 6 ms. After the initialization, the MCUSEL pin is sensed for 2 ms to determine the MCULDO voltage and program the VMCUSET register. Table 7-1 indicates the VMCU setting for each MCUSEL configuration. The MCULDO is enabled and the system waits for VMCU to reach its power-good threshold (typically 85% of its target voltage). It is only after VMCU reaches its power-good threshold that I^2C communication is allowed with the TPS8804. This sequence of events is outlined in Figure 7-1.

Table 7-1. VMCU Power-up Voltage

MCUSEL Connection	VMCU (V)
620-Ω to GND	1.5
Short to GND	1.8
Short to VINT	2.5
330-pF to GND	3.3

7.3.2 LDO Regulators

7.3.2.1 Power LDO Regulator

The power LDO is a voltage clamp that supplies many of the internal blocks in the TPS8804, including the internal LDO and MCU LDO. Because the power LDO is designed to clamp the VCC voltage, it is not precise and varies with VCC voltage and load. The power LDO shorts VCC and PLDO when the VCC voltage is below approximately 5 V, and regulates VCC when VCC is above approximately 5 V. The power LDO has a dropout voltage of approximately 1 V when it is regulating VCC. When the power LDO transitions from shorting to regulating, the PLDO voltage drops by approximately 1 V. Connect a 1-µF capacitor to PLDO to stabilize the PLDO voltage.

The power LDO is designed for use by the device and can be used to supply external circuitry that has a voltage limit of 7 V. The power LDO can also be used to supply the IR or blue LED anode through a diode.

7.3.2.2 Internal LDO Regulator

The internal LDO (INT LDO) regulator powers the TPS8804 amplifiers and digital core with a stable 2.3 V supply. Connect a 1-µF capacitor to VINT to stabilize the output. The INT LDO is always enabled when the device is powered. The INT LDO can be used to supply external circuitry. It is not recommended to power noisy or

switching loads with INT LDO, as any noise on VINT couples to the internal amplifiers and can generate noise. The INT LDO can be used in the CO connectivity test circuitry and the photo reference circuitry.

7.3.2.3 Microcontroller LDO Regulator

The microcontroller LDO (MCU LDO) powers the internal digital input and output buffers (IO buffers) and external MCU that controls and programs the TPS8804. Connect a 1-µF capacitor to VMCU to stabilize the output. The MCU LDO can be programmed to output 1.5 V, 1.8 V, 2.5 V, and 3.3 V. The default MCU LDO setting is determined by the configuration on the MCUSEL pin (see Table 7-1). After the device is powered, the MCU LDO voltage can be changed using the VMCUSET register. The MCU LDO can also be disabled using the MCU_DIS register.

The MCU LDO output VMCU powers the IO buffers on SCL, SDA, CSEL, GPIO, LEDEN, MCU_RX, MCU_TX1, MCU_TX2. The IO buffers level shift signals from the digital core to a level suitable for the microcontroller and signals from the microcontroller to a level suitable for the digital core. In general, connect VMCU to the microcontroller supply voltage to guarantee logic level compatibility. If the MCU LDO is disabled, connect an external supply to VMCU.

The MCU LDO has a power good signal MCU_PG that indicates whether the MCU LDO is above 85% the regulation voltage. A 125-µs deglitch filter prevents noise from affecting the MCU_PG signal. If MCU_PG is low after 10 ms of changing the MCU LDO voltage or enabling the MCU LDO, the MCU_ERR flag is set high. If the MCU_ERR flag is high and MCUERR_DIS is low, the MCU LDO fault state is entered. See Section 7.4.1.1 section for more information.

7.3.3 Photo Chamber AFE

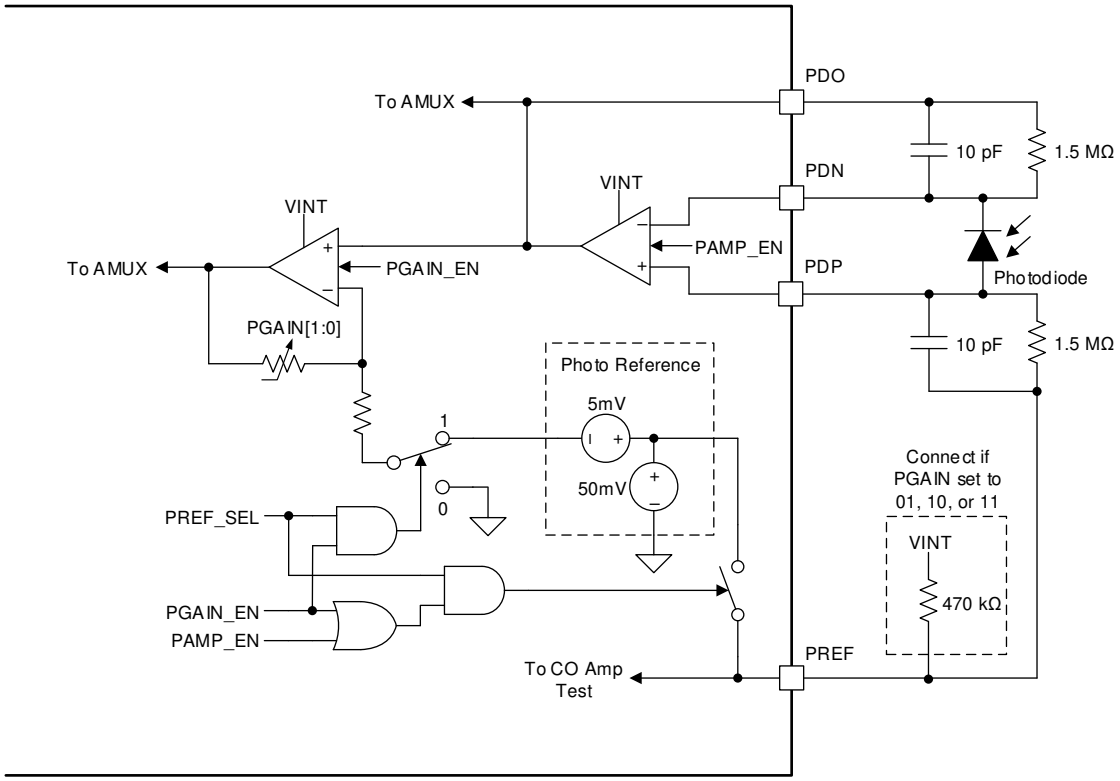

Figure 7-2. Photo Amplifier Circuit

The TPS8804 photo amplifier connects to a photoelectric chamber photodiode and has two stages—an input stage and gain stage. When the photoelectric chamber LED is enabled, light scatters off smoke particles in the chamber into the photodiode, producing a signal proportional to the smoke concentration. The output of each photo amplifier stage is connected to the AMUX for ADC reading. This configuration provides high bandwidth and dynamic range for the photodiode signal chain as the gain stage is on-the-fly adjustable.

Copyright © 2021 Texas Instruments Incorporated

7.3.3.1 Photo Input Amplifier

The input stage is a wide-bandwidth, low-offset op-amp designed for amplifying photodiode currents. In Figure 7-2, negative feedback causes the photodiode to conduct with zero voltage bias. The photo-current flows through resistors connected from PDP to a reference (GND or PREF) and PDN to PDO. These two resistors determine the gain of the input stage. The same value must be used for these two resistors because PDP and PDN leakage is amplified by these resistors. Capacitors installed in parallel with the resistors compensate the op-amp feedback loop for optimal response. The optimal compensation capacitance depends on the photodiode's capacitance. The compensation capacitance should be adjusted to minimize settling time without having overshoot on the output of the amplifier. Overshoot adds unnecessary noise in the output. The input stage outputs through the PDO pin, which is internally connected to the integrated photo gain stage and AMUX.

The input stage has the option of being referenced to GND or PREF. PREF is a reference that is normally pulled to VINT and is set to 50 mV when PREF_SEL = 1 and either PAMP_EN = 1 or PGAIN_EN = 1. The 50 mV reference keeps the input amplifier in a linear operating region when no signal is applied, improving the speed and zero-current sensitivity of the amplifier. It is generally recommended to set PREF_SEL=1 and connect the external gain resistor and compensation capacitor to PREF. Connect a 100-pF filtering capacitor from PREF to GND to reduce high frequency noise on PREF.

When measuring the photo amplifier output, it is recommended to take multiple ADC samples. Averaging ADC samples approximately reduces the noise by the square root of the amount of samples. The power consumed in a photoelectric smoke measurement is dominated by the LED power consumption, which is proportional to the LED on-time multiplied by the LED current. To maximize the signal-to-noise ratio for a given power level, set the LED pulse length to approximately twice the photo amplifier rise time and take multiple ADC samples while the output is stabilized.

In systems where the compensation capacitor is selected for a slower rise time and lower noise, take multiple ADC samples around the peak of the photo amplifier output.

7.3.3.2 Photo Gain Amplifier

The high-bandwidth, low noise photo gain amplifier connects to the output of the photo input stage to further amplify the photodiode signal. The gain amplifier is adjustable on-the-fly using the I^2C interface. The gain amplifier has four settings:

- 5x (4.75x if PREF_SEL=1)
- 11x (10.4x if PREF_SEL=1)
- 20x (18.5x if PREF_SEL=1)
- 35x (32.3x if PREF_SEL=1)

The gain stage has the option of being referenced to GND or PREF with the PREF_SEL bit. When PREF_SEL=1, a 5 mV reference offset counteracts the gain stage's input offset voltage to keep the gain stage output above 50 mV. The 5 mV reference offset is amplified by the gain stage, causing the output to change when the gain is changed, even when there is zero photo-current. It is recommended to connect a 470 kΩ resistor from PREF to VINT if the gain is set to 11x, 20x, or 35x. This resistor changes the PREF voltage to 70 mV and prevents the output from dropping below 50 mV in worst-case conditions. Referencing the gain stage to PREF causes the 50 mV reference to change with signal level due to the finite impedance of the reference. Because the reference is changing with the signal level, the gain is slightly less with PREF_SEL=1.

Copyright © 2021 Texas Instruments Incorporated

7.3.4 LED Driver

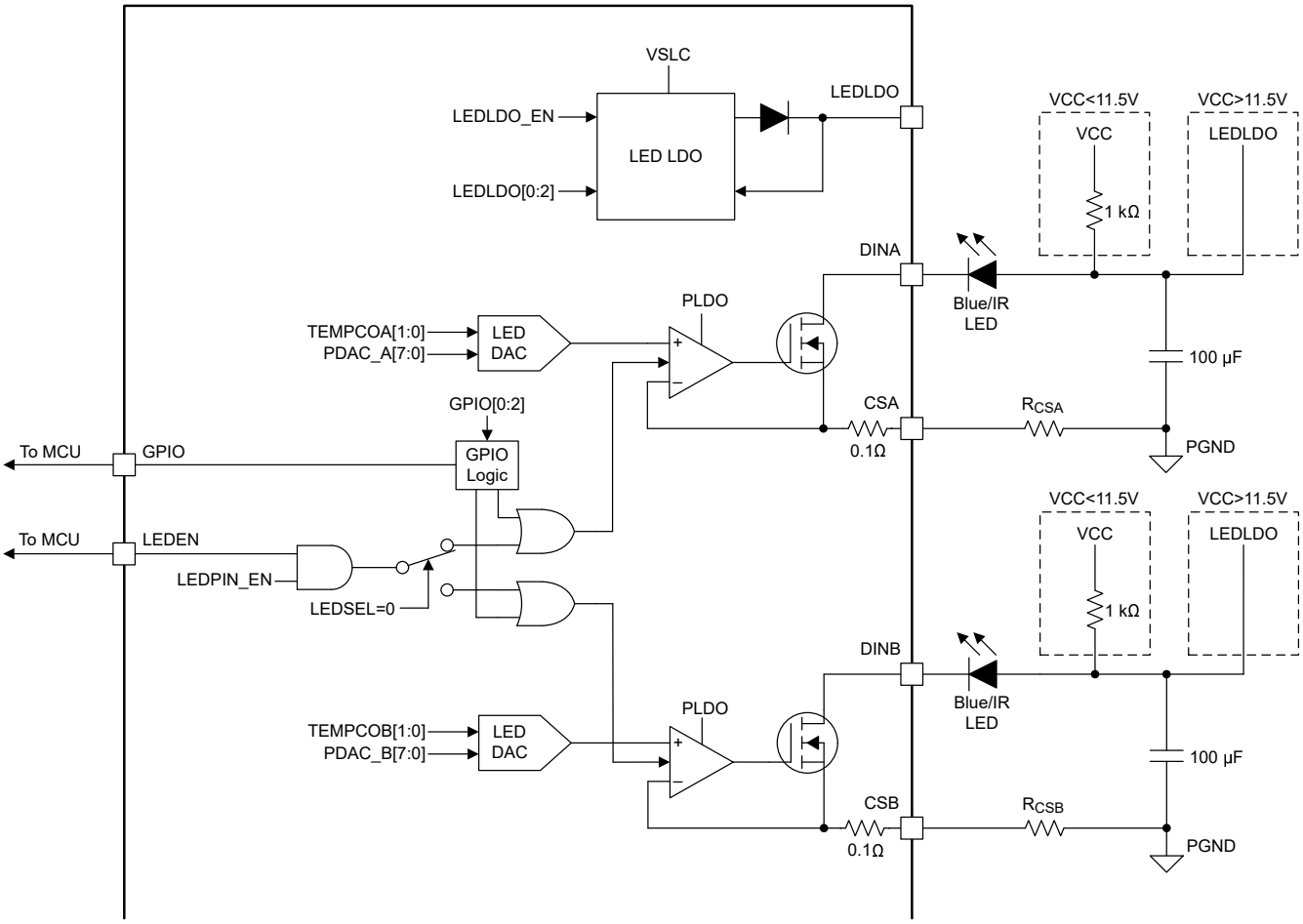

Figure 7-3. LED Driver Circuit

7.3.4.1 LED Current Sink

The two LED drivers are current regulated, temperature compensated, and adjustable with an 8-bit DAC. When the LED driver is enabled, the CSA voltage is regulated, and the current through the CSA resistor also flows through the LED and the DINA pin. A current sense resistor connects to the CSA pin. The LED driver is enabled with the LEDEN pin and LEDPIN_EN bit. Both the pin and bit must be high for the LED driver to operate. The LEDSEL bit switches which driver the LEDEN signal connects to. The GPIO pin can be configured to enable either LED driver.

The LED driver is temperature compensated to account for reduced LED intensity with increasing temperature. Four temperature compensation settings are available to support a variety of IR and blue LEDs. Temperature compensation is implemented by varying the CSA regulated voltage with temperature, thus the temperature compensation also depends on the CSA resistor. Each temperature compensation setting has a different DAC output at room temperature. To achieve a specific temperature compensation and current, the PDAC, TEMPCO, and CSA resistor must all be adjusted according to the Section 8.2.2.2 procedure.

The two LED drivers are interchangeable and support both IR and blue LEDs. The only difference between the two LED drivers is a code CSA_BIN available to improve the LED A driver current accuracy for IR LEDs. CSA_BIN in register 0x00 categorizes CSA voltage for each unit as close to the minimum, below average, above average, or close to the maximum (see Section 7.6). Use CSA_BIN to adjust the DAC and compensate for the variation on the LED A driver's current. After adjusting the DAC, the effective variation is reduced by a factor of 4 for the TEMPCOA = 11, PDAC_A = 00 setting. IR LEDs typically require the TEMPCOA = 11 temperature compensation setting. Therefore, use the LED driver A for powering IR LEDs. If better accuracy is required,

Copyright © 2021 Texas Instruments Incorporated

calibrate the LED driver current by connecting the CSA or CSB pin to the microcontroller ADC port, measuring the CSA or CSB voltage, and adjusting PDAC_A or PDAC_B until the required current is achieved.

Ensure that the LED current remains below 550 mA, the pulse width remains below 1 ms, and the duty cycle remains below 1%. There is no protection to prevent operation outside these conditions. Ensure the PDAC and TEMPCO registers are programmed before enabling the LED driver.

7.3.4.2 LED Voltage Supply

Enough voltage must be provided to the LED such that the DINA voltage is at least the dropout voltage ($V_{DINA,DROP}$) above the CSA voltage while the LED driver is enabled. Ensure the DINA voltage does not exceed 11.5 V. Because of the high LED drive currents, a large capacitor connected to the LED anode is required to provide pulsed power to the LED. Any of the internal regulators (PLDO, LEDLDO) or external supply (VDC) meeting the voltage requirements can be used to charge the LED capacitor. Connect the LED anode to LEDLDO when VCC > 11.5 V.

The LED LDO clamps the VSLC voltage and blocks reverse current with an integrated diode. It is current limited to prevent inrush current caused by charging the large capacitor. The regulation voltage is adjustable in the LEDLDO register. The LED LDO may be operated with VSLC below the regulation voltage. In this case, the LEDLDO voltage stabilizes to VSLC minus a diode voltage drop.

The LED driver current and rise time can vary by a few millivolts and microseconds across the LED anode supply and VCC voltages. It is recommended to use a consistent LED anode voltage whenever the LED driver is enabled.

Connect a capacitor with a value between 1 µF and 100 µF to the LEDLDO.

Copyright © 2021 Texas Instruments Incorporated

7.3.5 Carbon Monoxide Sensor AFE

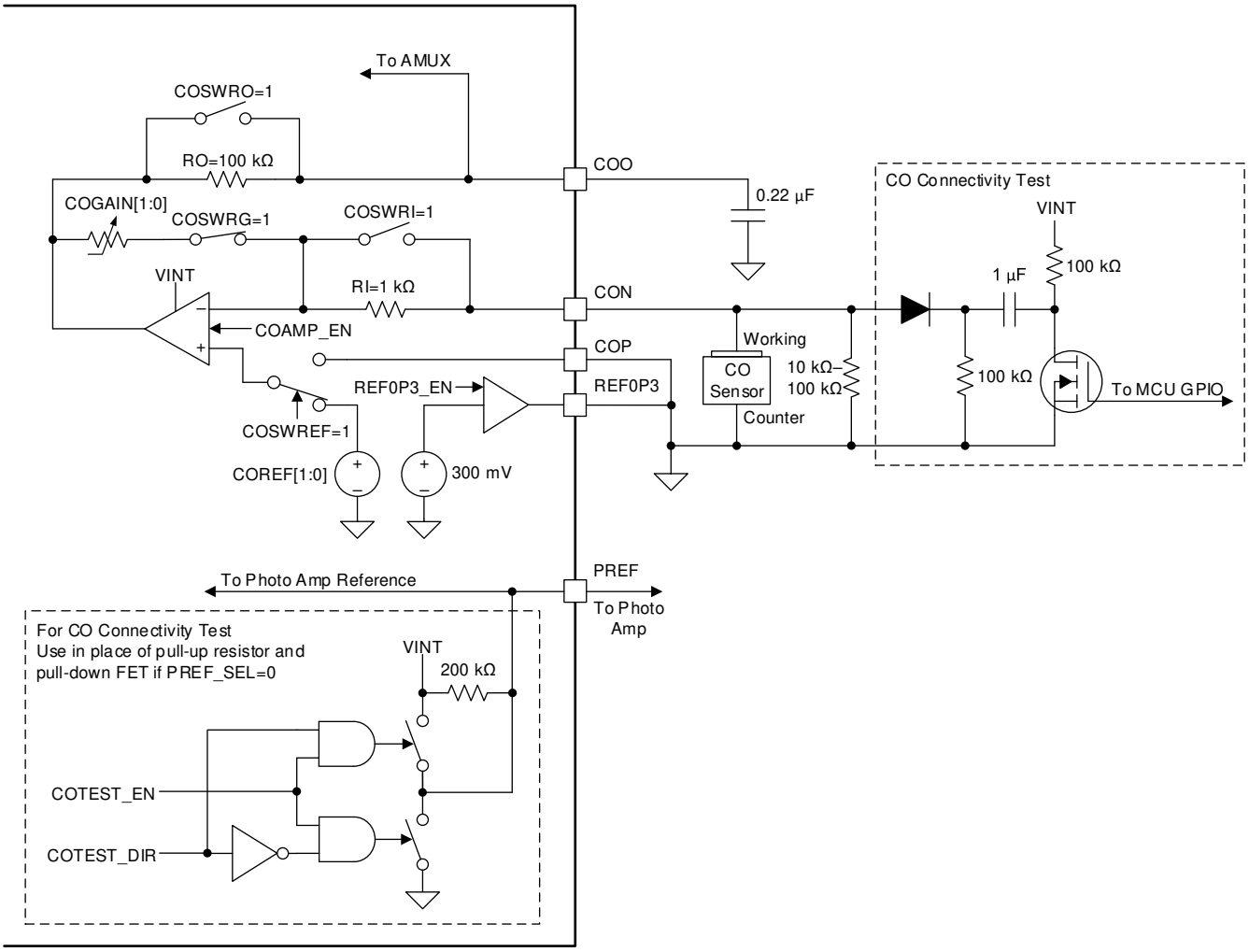

Figure 7-4. Carbon Monoxide Detection Circuit Referenced to GND

Copyright © 2021 Texas Instruments Incorporated

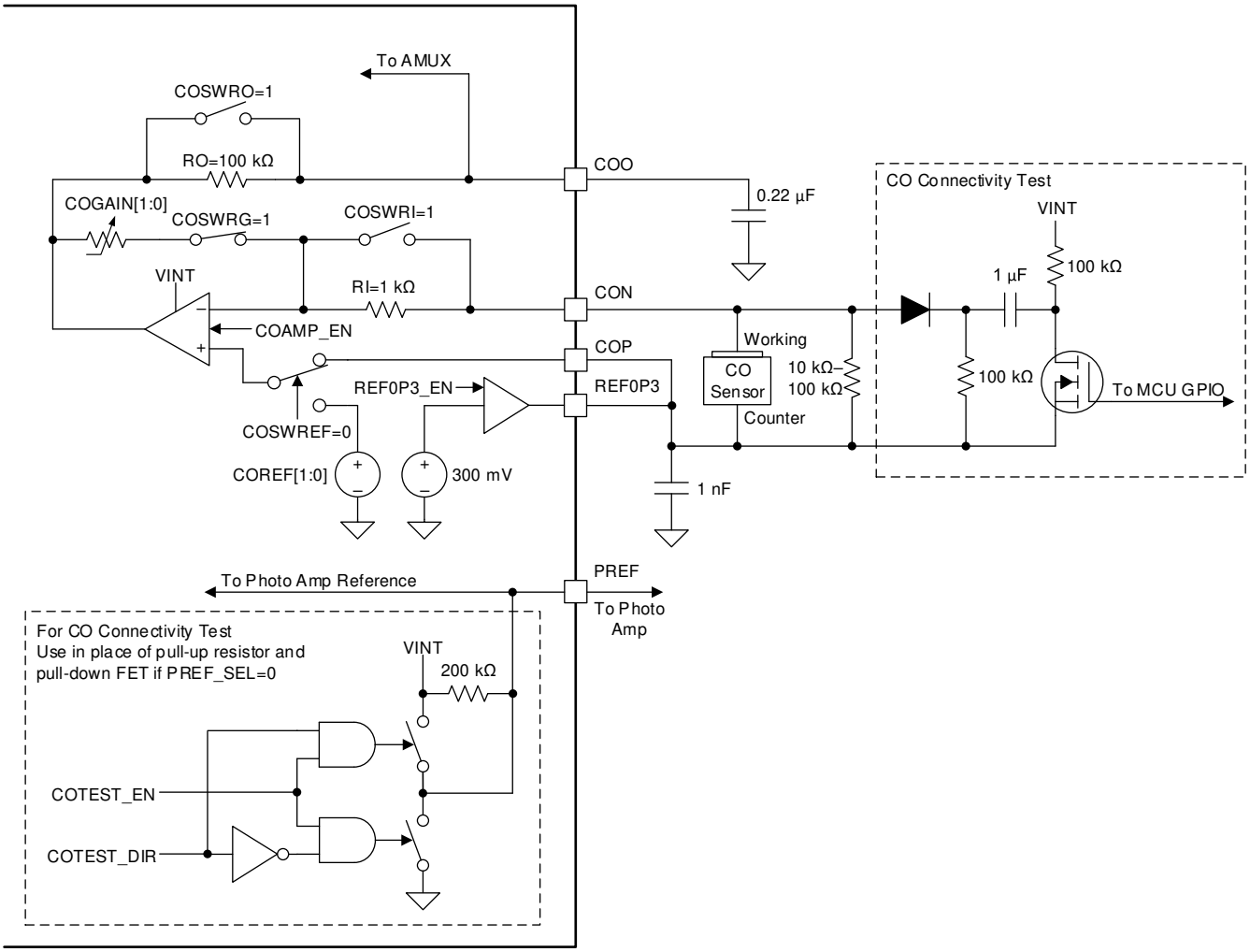

Figure 7-5. Carbon Monoxide Detection Circuit Referenced to 300mV

The TPS8804 CO AFE connects to an electrochemical CO sensor. The amplifier converts the microamps of sensor current into a voltage readable by an ADC. This is achieved with a low-offset, low-power op-amp with configurable input, gain, and output resistors.

7.3.5.1 CO Transimpedance Amplifier

The CO transimpedance amplifier is a low-offset, low-power op-amp with integrated input, gain, and output resistors. Each of these resistors can be disconnected using the COSW register bits if using external resistors. The input resistor limits amplifier current during a CO sensor connectivity test. The gain resistor amplifies the CO sensor signal. Adjust the gain resistor by changing the COGAIN register bits. Use the output resistor with an external capacitor to filter the CO amplifier output signal.

The CO amplifier has two integrated references. A programmable 1.25-mV to 5-mV reference COREF is internally connected to the op-amp positive terminal. A 300-mV reference is connected to the REF0P3 pin. When the millivolt reference is used, the CO sensor must be connected to GND. The millivolt reference is amplified to offset the amplifier output above GND. When the 300 mV reference is used, the reference offsets the CO amplifier output by 300 mV. In general, either reference can be used. The 300-mV reference offers better DC accuracy at the cost of extra power consumption. The 300 mV reference is generated with a reference and op-amp buffer for high precision. The REF0P3 pin must connect to a 1 nF capacitor for stability if it is enabled. The buffer is designed to source and sink small currents as required by the CO amplifier. The 300 mV reference and the 1.25 mV to 5mV reference cannot be enabled simultaneously.

A resistor connected in parallel with the CO sensor prevents charge from accumulating across its terminals. The output of the CO amplifier is connected to the COO pin for continuous monitoring and the AMUX for periodic sampling.

7.3.5.2 CO Connectivity Test

The built-in CO connectivity test function connects to the PREF pin and is available when the photo amplifier is not referenced to PREF. The COTEST_EN and COTEST_DIR register bits program a pull-up and pull-down switch on PREF. A 200 kΩ pull-up resistor charges the 1 µF capacitor when the CO test is not in use. When PREF is pulled low, charge is injected into the amplifier and the output pulse shape can be used to determine if the sensor is connected. An external MOSFET and pull-up resistor achieves the same function as the internal COTEST circuitry.

7.3.6 SLC Interface Transmitter and Receiver

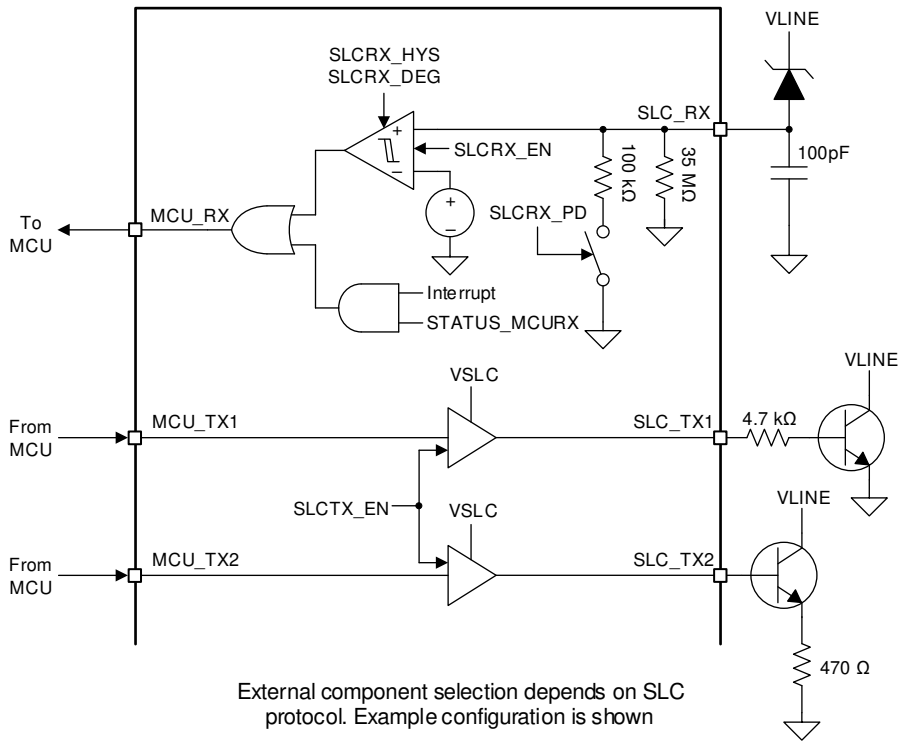

External component selection depends on SLC protocol. Example configuration is shown

Figure 7-6. SLC Interface Circuit

In smoke detection systems where the power line carries communication signals between smoke detectors and central fire panels, the SLC interface connects to the power line to transmit and receive data from the MCU. The interface isolates the high voltage power line from the microcontroller, mitigating risk of damage and reducing external component count.

7.3.6.1 SLC Transmitter

Signals are transmitted to the power line by pulling the line low with a controlled current sink. When the driver is enabled, the microcontroller controls the SLC_TX1 and SLC_TX2 outputs by driving MCU_TX1 and MCU_TX2 high. In Figure 7-6, the SLC_TX2 output driver connects to an external transistor and current-limiting resistor. The current drawn from the power line is shown in Equation 1. The SLC_TX1 output driver is able to pull the line completely low. This configuration allows for multi-level communication.

Copyright © 2021 Texas Instruments Incorporated

$$I_{SINK} = \frac{V_{SLC} - V_{BE}}{R_E} \quad (1)$$

7.3.6.2 SLC Receiver

The SLC receiver transmits signals from the power line to the microcontroller. A reverse biased Zener diode level shifts the power line. The Zener diode is selected to drop the voltage such that when V_{LINE} is high, the SLCRX pin is above 3 V and when V_{LINE} is low, the SLCRX pin is below 0.5 V. The 100-pF capacitor filters voltage spikes that may occur on V_{LINE}. The hysteretic and deglitched comparator filters spurious noise on VLINE. The comparator output is synchronized with the 32 kHz clock before being deglitched. The hysteresis voltage and deglitch time are programmable with the SLCRX_HYS and SLCRX_DEG register bits. An internal pulldown resistor biases the Zener diode to maintain the SLC_RX voltage below 17 V, the recommended maximum.

7.3.7 AMUX

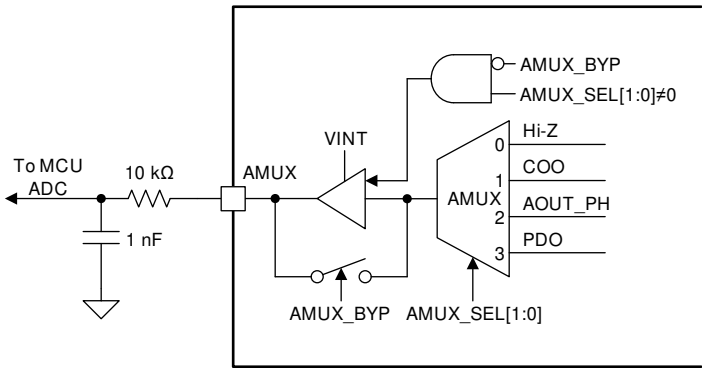

Figure 7-7. Analog Multiplexer Circuit

The AMUX switch and buffer are used to connect the various TPS8804 amplifier outputs to a single ADC. The unity-gain amplifier improves the drive strength and fidelity of the analog signals when connected to an ADC. A 330 pF to 1 nF capacitor must be connected to the AMUX pin to stabilize its output. The 10-kΩ resistor filters high-frequency noise in the analog signal. Using a 10-kΩ resistor and 1-nF capacitor reduces noise levels in the photo amplifier signal. The buffer has the option of being bypassed to remove the added offset introduced by the unity-gain amplifier. Because the AMUX requires the bias block (see Section 7.3.8), bypassing the buffer does not eliminate the AMUX current consumption.

7.3.8 Analog Bias Block and 8 MHz Oscillator

A central analog bias block connects to many of the amplifiers, drivers, and regulators. This block is enabled when any of its connected blocks are enabled. Similarly, an internal 8-MHz oscillator is enabled when the photo input amplifier is enabled. Table 7-2 lists the conditions when the bias block and 8-MHz oscillator are enabled. The bias block and 8-MHz oscillator consume current in addition to the connecting blocks whenever they are enabled. Because the specified current consumption of each block does not include the bias block or the 8-MHz oscillator, add the bias block and 8-MHz oscillator currents when calculating system power consumption. Typical values of the bias block and 8-MHz oscillator current are shown in Section 6.6.

Table 7-2. Conditions for Enabling the Bias Block and 8 MHz Oscillator

BLOCK	CONDITION	BIAS ENABLED?	8-MHZ OSC ENABLED?
Photo input amplifier	PAMP_EN = 1	Yes	Yes
AMUX buffer	AMUX_SEL[0:2] ≠ 000	Yes	No
LED LDO	LEDLDO_EN = 1	Yes	No
Photo gain amplifier	PGAIN_EN = 1	Yes	No
LED driver	LEDEN = VMCU and LEDPIN_EN = 1	Yes	No

Table 7-2. Conditions for Enabling the Bias Block and 8 MHz Oscillator (continued)

BLOCK	CONDITION	BIAS ENABLED?	8-MHZ OSC ENABLED?
Temperature monitor	OTS_EN = 1	Yes	No
SLC transmitter	SLCTX_EN = 1	Yes	No

7.3.9 Interrupt Signal Alerts

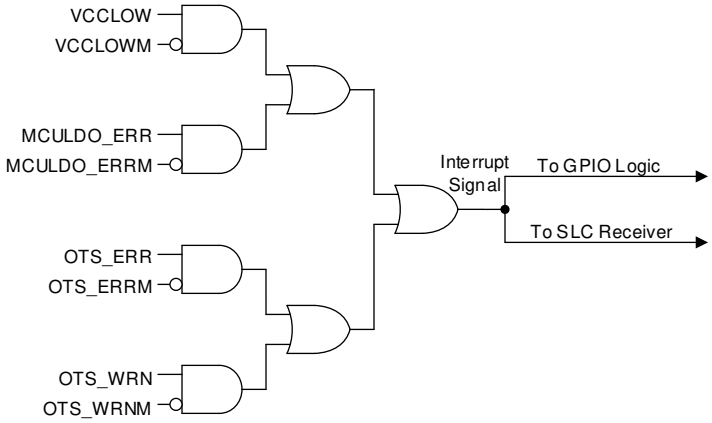

Figure 7-8. Interrupt Signal Alert Logic

Configurable interrupt signals notify the MCU when a system anomaly occurs. The interrupt signal indicates the STATUS1 register, which has bits that latch high when reaching various condition limits such as temperature or voltage. Each of the bits in the STATUS1 register can be independently configured to send an interrupt signal by setting the MASK register bit corresponding to each STATUS1 bit. The GPIO bits must be set to 0x2 to output interrupt signals through the GPIO pin, and the STATUS_MCURX bit must be set to 1 to output interrupt signals through the MCU_RX pin. By connecting the GPIO or MCU_RX pin to the microcontroller, the MCU can be immediately notified when a STATUS1 bit changes instead of having to repeatedly read the STATUS1 register. After the device sends the interrupt signal, the signal remains high until the STATUS1 register is read, at which point the fault clears if the error condition is removed.

Copyright © 2021 Texas Instruments Incorporated

7.4 Device Functional Modes

7.4.1 Fault States

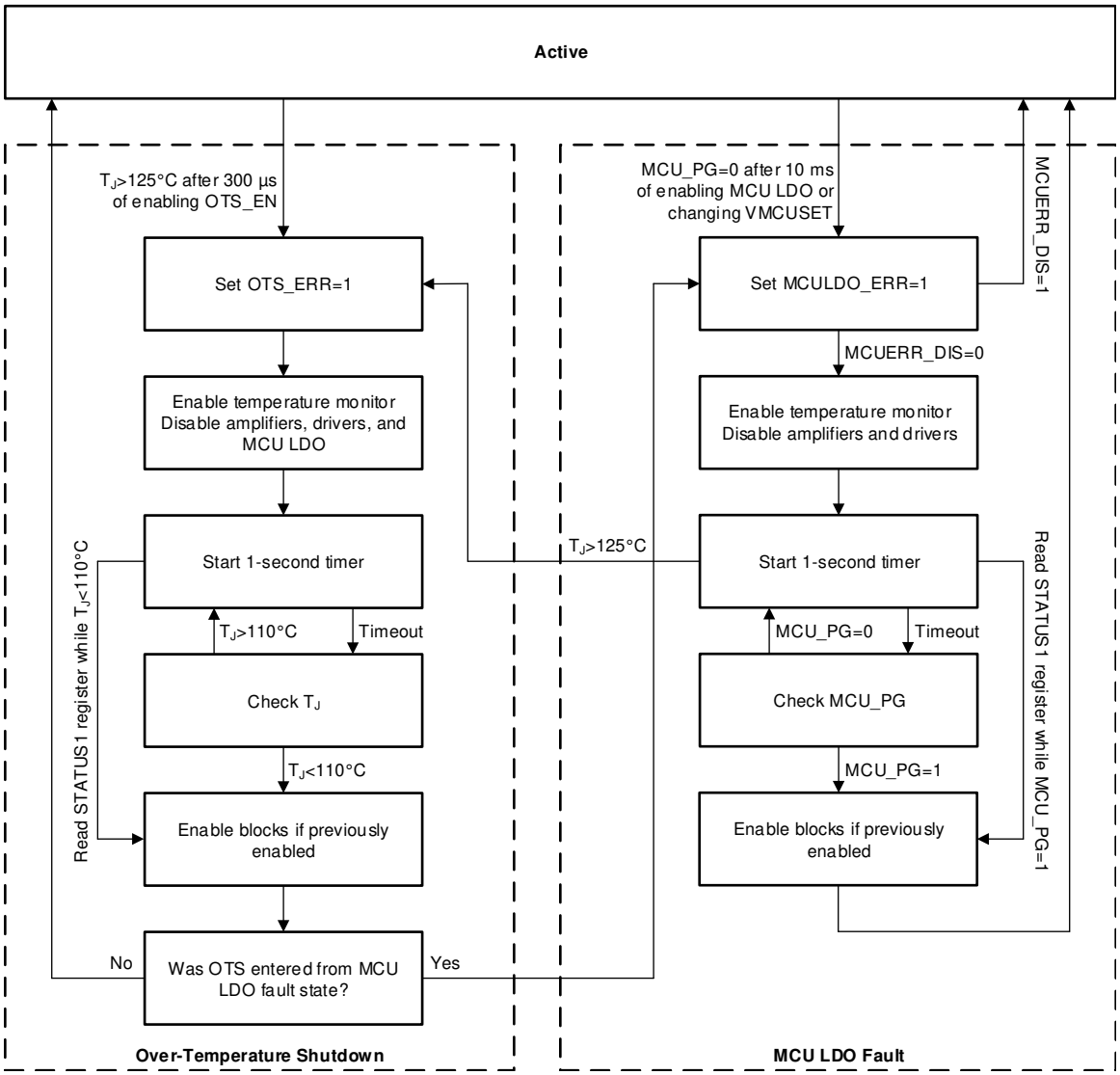

Figure 7-9. Fault States Diagram

The TPS8804 device uses several monitors to alert the MCU when system irregularities occur. In addition to alerting the MCU, two monitors cause the device to enter protective fault states:

- MCULDO under-voltage
- system over-temperature

The fault states reduce risk of damage and brown-outs to the system in the event of short circuits or other power errors.

7.4.1.1 MCU LDO Fault

The MCU LDO has an undervoltage monitor to notify the MCU if the LDO falls out of regulation. This monitor is enabled any time the MCU LDO is enabled and its status is in the MCU_PG register bit. A 125-µs deglitch time rejects load and line transient spikes that may briefly drop the MCU LDO voltage below the under-voltage threshold. If MCU_PG is low while the MCU LDO is enabled and it has been more than 10 ms since the LDO was enabled or changed voltage, the MCU_ERR register bit latches high. When the MCU_ERR bit is set high and the MCUERR_DIS bit is low, the MCU LDO fault state is entered.

When the MCU LDO fault state is entered, all amplifiers and drivers are disabled. The MCU LDO remains enabled to attempt to recover the system. The device enables the over-temperature monitor (OTS_EN) to prevent a VMCU short circuit from overheating the TPS8804 device. If a VMCU short circuit causes the temperature of the TPS8804 to rise, an over-temperature shutdown occurs and the MCU LDO shuts off.

There are two methods to exit the fault state. Every second in the fault state, the MCU_PG register bit is automatically read. If high, the fault state is exited. The MCU_ERR bit remains high until the STATUS1 register is read. Alternatively, if the STATUS1 register is read and MCU_PG is high, the fault state is exited. When the device exits the MCU_ERR fault state, the device re-enables all blocks that were enabled before the fault state occurred.

If an over-temperature fault occurs while in the MCU LDO fault state, the device enters the over-temperature fault state. The over-temperature fault state disables the MCU LDO in addition to the blocks that are disabled by the MCU LDO fault state. After the device exits the over-temperature fault state, it immediately re-enters the MCU LDO fault state to confirm the MCU LDO status.

7.4.1.2 Over-Temperature Fault

An over-temperature shutdown (OTS) fault occurs if OTS_EN = 1 and the die temperature exceeds 125°C. The fault is masked for 300 µs after setting OTS_EN = 1. OTS_EN must be enabled for at least 300 µs in order to determine if the die has overheated. After the device detects an over-temperature condition, it disables all drivers, amplifiers, and regulators and sets OTS_ERR to 1. This action prevents additional temperature stress caused by a short circuit.

Similar to the MCU LDO fault, the device exits the OTS fault state with two methods:

- The device checks the die temperature once every second. If the temperature is below 110°C, the device exits the fault state.
- Reading the STATUS1 register with the die temperature below 110°C exits the fault state.

When the device exits the OTS fault state, it re-enables all blocks that were enabled before the OTS fault occurred.

7.5 Programming

The TPS8804 serial interface follows the I^2C industry standard. The device supports both standard and fast mode, and it supports auto-increment for fast reading and writing of sequential registers. A 33-kΩ pullup resistor connecting the SDA and SCL pins to VMCU is recommended for fast mode operation. The VMCU voltage determines the logic level for I^2C communication. The CSEL pin selects the device address. When CSEL is pulled to GND, the device address is 0x3F. When CSEL is pulled to VMCU, the device address is 0x2A.

7.6 Register Maps

Table 7-3 lists the memory-mapped registers for the Device registers. All register offset addresses not listed in Table 7-3 should be considered as reserved locations and the register contents should not be modified.

Table 7-3. Device Registers

Offset	Acronym	Register Name	Section
0h	REVID	Device Information	Go
1h	STATUS1	Status 1	Go
2h	STATUS2	Status 2	Go
3h	MASK	Interrupt Mask	Go
4h	CONFIG1	Config 1	Go
5h	CONFIG2	Config 2	Go
6h	ENABLE1	Enable 1	Go
7h	ENABLE2	Enable 2	Go
8h	CONTROL	Control	Go

Copyright © 2021 Texas Instruments Incorporated

Table 7-3. Device Registers (continued)

Offset	Acronym	Register Name	Section
Bh	GPIO_AMUX	GPIO and AMUX	Go
Ch	COSW	CO Switch	Go
Dh	CO	CO Amplifier	Go
Fh	LEDLDO	LED LDO	Go
10h	PH_CTRL	Photo Amplifier	Go
11h	LED_DAC_A	LED DAC A	Go
12h	LED_DAC_B	LED DAC B	Go

Complex bit access types are encoded to fit into small table cells. Table 7-4 shows the codes that are used for access types in this section.

Table 7-4. Device Access Type Codes

Access Type	Code	Description
Read Type		
R	R	Read
RC	R C	Read to Clear
Write Type		
W	W	Write
Reset or Default Value		
-n		Value after reset or the default value

7.6.1 REVID Register (Offset = 0h) [reset = 0h]

REVID is shown in Table 7-5.

Return to Summary Table.

Table 7-5. REVID Register Field Descriptions

Bit	Field	Type	Reset	Description
7-6	CSA_BIN	R	0h	CSA voltage bin for TEMPCOA=11, PDAC_A=00 setting 0h = CSA voltage between specified minimum and typical, closer to minimum 1h = CSA voltage between specified minimum and typical, closer to typical 2h = CSA voltage between specified maximum and typical, closer to typical 3h = CSA voltage between specified maximum and typical, closer to maximum
5-0	RESERVED	R	0h	Reserved

7.6.2 STATUS1 Register (Offset = 1h) [reset = 0h]

STATUS1 is shown in Table 7-6.

Return to Summary Table.

Table 7-6. STATUS1 Register Field Descriptions

Bit	Field	Type	Reset	Description
7	RESERVED	R	0h	Reserved
6	VCCLOW	RC	0h	VCC low warning 0h = no VCCLOW error has occurred 1h = VCC below V_VCCLOW,FALL threshold and VCCLOW_DIS=1 for VCCLOW deglitch time. VCCLOW is masked for 1 ms after VCCLOW_DIS is set to 0
5	MCULDO_ERR	RC	0h	MCU LDO power good error 0h = no MCULDO error has occurred 1h = MCU_PG=0 and MCU_EN=1 for TMCULDO,PG. MCULDO_ERR is masked for TMCULDO,MASK after VMCUSET or MCU_DIS has changed
4	OTS_ERR	RC	0h	Thermal shutdown error 0h = no thermal shutdown error has occurred 1h = junction temperature has exceeded T_SHUTDOWN
3	OTS_WRN	RC	0h	Thermal warning flag 0h = no thermal warning has occurred 1h = junction temperature has exceeded T_WARNING
2-1	RESERVED	R	0h	Reserved
0	SLC_RX	RC	0h	SLC_RX status 0h = deglitched SLC_RX is low or SLCRX_EN=0 1h = deglitched SLC_RX is high and SLCRX_EN=1

7.6.3 STATUS2 Register (Offset = 2h) [reset = 0h]

STATUS2 is shown in Table 7-7.

Return to Summary Table.

Table 7-7. STATUS2 Register Field Descriptions

Bit	Field	Type	Reset	Description
7-2	RESERVED	R	0h	Reserved
1	MCU_PG	R	0h	MCU LDO power good indicator 0h = MCU LDO is below power good threshold or MCU_DIS=1 1h = MCU LDO is above power good threshold and MCU_DIS=0
0	RESERVED	R	0h	Reserved

7.6.4 MASK Register (Offset = 3h) [reset = 0h]

MASK is shown in Table 7-8.

Return to Summary Table.

Table 7-8. MASK Register Field Descriptions

Bit	Field	Type	Reset	Description
7	RESERVED	R	0h	Reserved
6	VCCLOWM	R/W	0h	V_{CC} low warning interrupt mask 0h = interrupt on VCC low 1h = no interrupt on VCC low
5	MCULDO_ERRM	R/W	0h	MCU LDO power good error interrupt mask 0h = interrupt on MCULDO power good error 1h = no interrupt on MCULDO power good error

Copyright © 2021 Texas Instruments Incorporated

Table 7-8. MASK Register Field Descriptions (continued)

Bit	Field	Type	Reset	Description
4	OTS_ERRM	R/W	0h	Thermal shutdown error interrupt mask 0h = interrupt on thermal shutdown error 1h = no interrupt on thermal shutdown error
3	OTS_WRNM	R/W	0h	Thermal warning flag interrupt mask 0h = interrupt on thermal warning 1h = no interrupt on thermal warning
2-1	RESERVED	R	0h	Reserved
0	STATUS_MCURX	R/W	0h	Status interrupt on the MCU_RX pin 0h = disable 1h = MCU_RX outputs high if any unmasked STATUS1 flags

7.6.5 CONFIG1 Register (Offset = 4h) [reset = 20h]

CONFIG1 is shown in Table 7-9.

Return to Summary Table.

Table 7-9. CONFIG1 Register Field Descriptions

Bit	Field	Type	Reset	Description
7-6	SLCRX_DEG	R/W	0h	SLC_RX deglitch control 0h = none 1h = 125us 2h = 1ms 3h = 20ms
5	SLCRX_PD	R/W	1h	SLC_RX pulldown resistor enable 0h = >1MOhm pulldown resistor on SLC_RX 1h = 100k pulldown resistor on SLC_RX
4-3	VMCUSET	R/W	0h	MCU LDO voltage. Default value is set by MCUSEL on power-up. 0h = 1.5V 1h = 1.8V 2h = 2.5V 3h = 3.3V
2-0	RESERVED	R	0h	Reserved

7.6.6 CONFIG2 Register (Offset = 5h) [reset = 0h]

CONFIG2 is shown in Table 7-10.

Return to Summary Table.

Table 7-10. CONFIG2 Register Field Descriptions

Bit	Field	Type	Reset	Description
7-6	RESERVED	R	0h	Reserved
5	SLCRX_HYS	R/W	0h	SLC receiver comparator hysteresis 0h = 1.2V hysteresis 1h = 0.1V hysteresis
4-0	RESERVED	R	0h	Reserved

7.6.7 ENABLE1 Register (Offset = 6h) [reset = 0h]

ENABLE1 is shown in Table 7-11.

Return to Summary Table.

Copyright © 2021 Texas Instruments Incorporated

Table 7-11. ENABLE1 Register Field Descriptions

Bit	Field	Type	Reset	Description
7-6	RESERVED	R	0h	Reserved
5	SLCRX_EN	R/W	0h	Control of SLC receiver 0h = disable 1h = enable
4	RESERVED	R	0h	Reserved
3	PAMP_EN	R/W	0h	Photo input amplifier control 0h = amplifier disabled 1h = amplifier enabled
2	PGAIN_EN	R/W	0h	Photo Gain amplifier control 0h = amplifier disabled 1h = amplifier enabled
1	RESERVED	R	0h	Reserved
0	LEDLDO_EN	R/W	0h	LED LDO control 0h = disabled 1h = enabled

7.6.8 ENABLE2 Register (Offset = 7h) [reset = 0h]

ENABLE2 is shown in Table 7-12.

Return to Summary Table.

Table 7-12. ENABLE2 Register Field Descriptions

Bit	Field	Type	Reset	Description
7	LEDSEL	R/W	0h	LED input select 0h = LEDENA 1h = LEDENB
6-3	RESERVED	R	0h	Reserved
2	LEDPIN_EN	R/W	0h	LEDEN pin enable 0h = LEDEN pin does not enable LED block 1h = LEDEN pin enables LED block
1	SLCTX_EN	R/W	0h	SLC transmitter enable 0h = SLC transmitter disabled 1h = SLC transmitter enabled
0	RESERVED	R	0h	Reserved

7.6.9 CONTROL Register (Offset = 8h) [reset = 0h]

CONTROL is shown in Table 7-13.

Return to Summary Table.

Table 7-13. CONTROL Register Field Descriptions

Bit	Field	Type	Reset	Description
7-6	RESERVED	R	0h	Reserved
5	MCU_DIS	R/W	0h	MCU LDO disable 0h = MCU LDO enabled 1h = MCU LDO disabled
4	VCCLOW_DIS	R/W	0h	VCCLOW brown-out monitor disable 0h = VCCLOW monitor is enabled 1h = VCCLOW monitor is disabled

Copyright © 2021 Texas Instruments Incorporated

Table 7-13. CONTROL Register Field Descriptions (continued)

Bit	Field	Type	Reset	Description
3	MCUERR_DIS	R/W	0h	MCULDO error mode disable 0h = in case of MCULDO error, FAULT mode is entered 1h = disable entering FAULT mode in case of MCULDO error
2	OTS_EN	R/W	0h	Over-temperature shutdown mode disable 0h = disable entering over-temperature FAULT mode. 1h = in case of over-temperature, FAULT mode is entered and OTS_ERR flag is raised.
1	SOFTRESET	R/W	0h	Set registers to the default value 0h = do not reset registers 1h = reset all registers. SOFTRESET is reset. VMCUSET bits and STATUS1 register is unchanged.
0	RESERVED	R	0h	Reserved

7.6.10 GPIO_AMUX Register (Offset = Bh) [reset = 0h]

GPIO_AMUX is shown in Table 7-14.

Return to Summary Table.

Table 7-14. GPIO_AMUX Register Field Descriptions

Bit	Field	Type	Reset	Description
7	AMUX_BYP	R/W	0h	Analog multiplexer bypass 0h = analog multiplexer buffer is enabled when AMUX_SEL[1:0] != 0h 1h = analog multiplexer buffer is bypassed with a low-resistance switch
6	RESERVED	R	0h	Reserved
5-4	AMUX_SEL	R/W	0h	Analog multiplexer input select 0h = AMUX off 1h = COO 2h = AOUT_PH 3h = PDO
3	RESERVED	R	0h	Reserved
2-0	GPIO_2:0	R/W	0h	Multi-purpose digital input and output 0h = Hi-Z 1h = TI Reserved 2h = output low if no status errors, high if any unmasked errors 3h = TI Reserved 4h = GPIO or LEDENA enables LED A 5h = GPIO or LEDENB enables LED B 6h = TI Reserved 7h = TI Reserved

7.6.11 COSW Register (Offset = Ch) [reset = 0h]

COSW is shown in Table 7-15.

Return to Summary Table.

Table 7-15. COSW Register Field Descriptions

Bit	Field	Type	Reset	Description
7	COSWRO	R/W	0h	CO amplifier output resistor (output of amplifier to COO pin) enable 0h = 0 Ohms 1h = 100 kOhms

Copyright © 2021 Texas Instruments Incorporated

Table 7-15. COSW Register Field Descriptions (continued)

Bit	Field	Type	Reset	Description
6	COSWRG	R/W	0h	CO gain resistor (output of amplifier to inverting input of amplifier) enable 0h = Hi-Z 1h = Resistance set by COGAIN register
5	COSWRI	R/W	0h	CO input resistor (inverting input of amplifier to CON pin) enable 0h = 0 Ohms 1h = 1 kOhms
4	COSWREF	R/W	0h	CO reference switch enable 0h = positive input of amplifier connected to COP 1h = positive input of amplifier connected to 1mV to 5mV COREF
3-0	RESERVED	R	0h	Reserved

7.6.12 CO Register (Offset = Dh) [reset = 0h]

CO is shown in Table 7-16.

Return to Summary Table.

Table 7-16. CO Register Field Descriptions

Bit	Field	Type	Reset	Description
7	REF0P3_EN	R/W	0h	300mV reference enable 0h = Buffer disabled 1h = Buffer enabled
6-5	COREF	R/W	0h	Reference voltage for CO amplifier 0h = 1.25mV 1h = 2.5mV 2h = 3.75mV 3h = 5mV
4-3	COGAIN	R/W	0h	CO amplifier feedback resistance 0h = 1100 kOhm 1h = 300 kOhm 2h = 500 kOhm 3h = 800 kOhm
2	COTEST_DIR	R/W	0h	CO test output direction 0h = pull-down 1h = pull-up
1	COTEST_EN	R/W	0h	Enable COTEST output on PREF 0h = disabled 1h = enabled
0	COAMP_EN	R/W	0h	CO amplifier control 0h = disabled 1h = enabled

7.6.13 LEDLDO Register (Offset = Fh) [reset = 0h]

LEDLDO is shown in Table 7-17.

Return to Summary Table.

Table 7-17. LEDLDO Register Field Descriptions

Bit	Field	Type	Reset	Description
7-4	RESERVED	R	0h	Reserved

Copyright © 2021 Texas Instruments Incorporated

Table 7-17. LEDLDO Register Field Descriptions (continued)

Bit	Field	Type	Reset	Description
3-1	LEDLDO	R/W	0h	LED LDO settings 0h = 7.5V 1h = 8.0V 2h = 8.5V 3h = 9.0V 4h = 9.5V 5h = 10V 6h = Reserved 7h = Reserved
0	RESERVED	R	0h	Reserved

7.6.14 PH_CTRL Register (Offset = 10h) [reset = 0h]

PH_CTRL is shown in Table 7-18.

Return to Summary Table.

Table 7-18. PH_CTRL Register Field Descriptions

Bit	Field	Type	Reset	Description
7	RESERVED	R	0h	Reserved
6-5	TEMPCOB	R/W	0h	LED B Temperature Coefficient Setting 0h = 0.347 mV/C 1h = 0.416 mV/C 2h = 0.693 mV/C 3h = 1.040 mV/C
4-3	TEMPCOA	R/W	0h	LED A Temperature Coefficient Setting 0h = 0.347 mV/C 1h = 0.416 mV/C 2h = 0.693 mV/C 3h = 1.040 mV/C
2	PREF_SEL	R/W	0h	Photo Reference setting 0h = Photo gain amplifier referenced to 0mV 1h = Photo gain amplifier and PREF pin connected to 50mV internal reference
1-0	PGAIN	R/W	0h	Photo Gain setting 0h = 5 1h = 11 2h = 20 3h = 35

7.6.15 LED_DAC_A Register (Offset = 11h) [reset = 0h]

LED_DAC_A is shown in Table 7-19.

Return to Summary Table.

Table 7-19. LED_DAC_A Register Field Descriptions

Bit	Field	Type	Reset	Description
7-0	PDAC_A	R/W	0h	LED DAC A setting 00h to FFh = 0mV to 300mV

7.6.16 LED_DAC_B Register (Offset = 12h) [reset = 0h]

LED_DAC_B is shown in Table 7-20.

Return to Summary Table.

Table 7-20. LED_DAC_B Register Field Descriptions

Bit	Field	Type	Reset	Description
7-0	PDAC_B	R/W	0h	LED DAC B setting 00h to FFh = 0mV to 300mV

Copyright © 2021 Texas Instruments Incorporated

8 Application and Implementation

Note

Information in the following applications sections is not part of the TI component specification, and TI does not warrant its accuracy or completeness. TI's customers are responsible for determining suitability of components for their purposes, as well as validating and testing their design implementation to confirm system functionality.

8.1 Application Information

The TPS8804 supports a variety of smoke alarm platforms, including single-wave or dual-wave photoelectric smoke and CO detection.

8.2 Typical Application

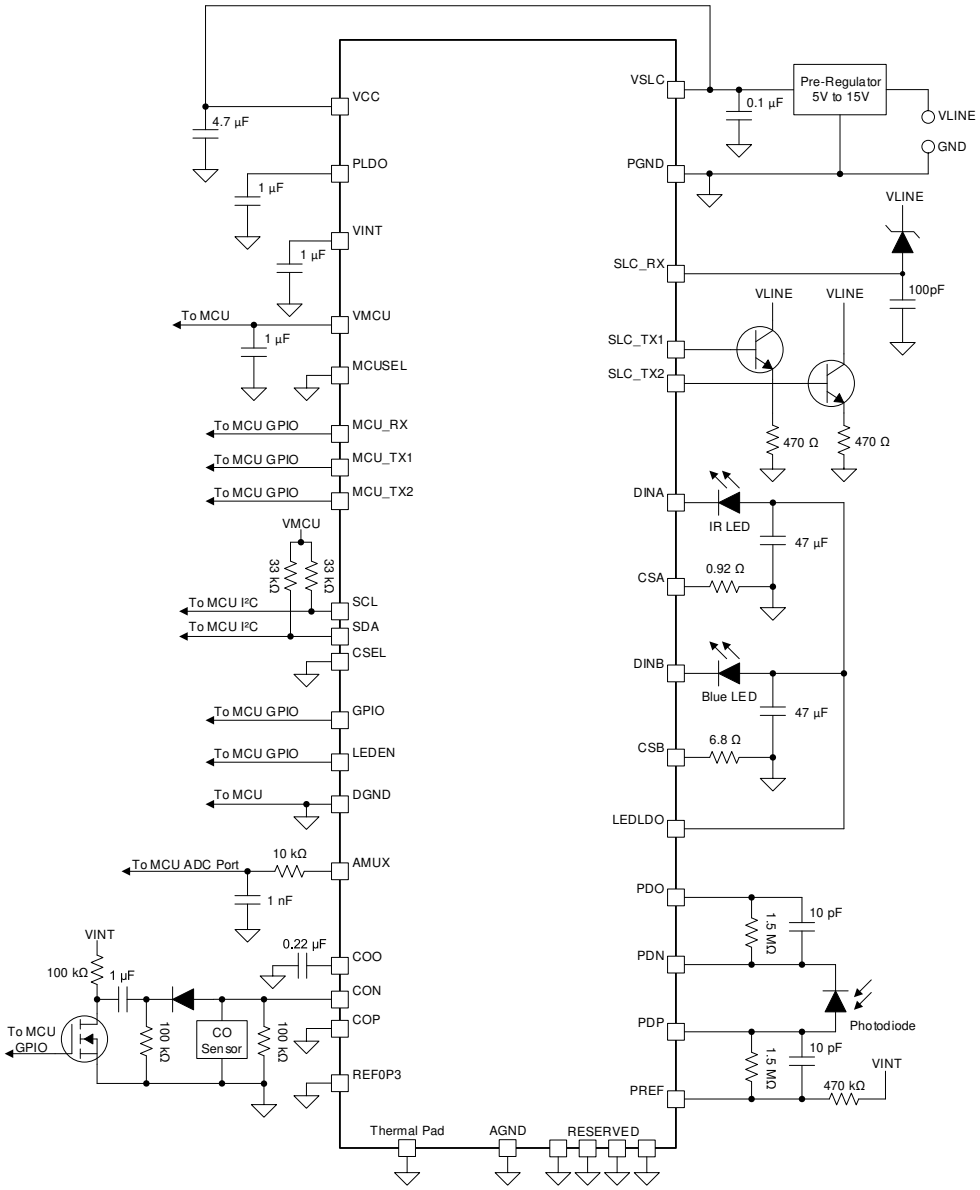

Figure 8-1. Dual-Wave Photoelectric Smoke and CO Detector

8.2.1 Design Requirements

In this example, a smoke alarm requires the following:

- 100 MΩ photoamplifier transconductance with sub-nanoamp detection
- 100 mA IR LED current with 1-mA/°C temperature compensation
- 50mA blue LED current with 0.1mA/°C temperature compensation

8.2.2 Detailed Design Procedure

8.2.2.1 Photo Amplifier Component Selection

To meet the 100-MΩ photoamplifier transconductance requirement, set the gain stage to 35x with PGAIN = 11. Because the application requires sub-nanoamp current detection, reference the photo amplifier to PREF and set PREF_SEL = 1. This reference offsets the input stage output by 50 mV and offsets the gain stage output by 225 mV. Because the application uses PREF, the gain stage amplification reduces to 32.25x. Divide 100 MΩ by 32.25x to get 3.1 MΩ. The gain is distributed across two resistors, therefore use a resistor with a value of approximately 1.55 MΩ. A 1.5-MΩ resistor is selected. The achieved transconductance is 96.8 MΩ. Use 10-pF of compensation capacitance in parallel with the 1.5-MΩ resistors. Use an oscilloscope with averaging to verify the photo amplifier is quickly settling but not overshooting. If the photo amplifier has overshoot, increase the compensation capacitance. If the photo amplifier is settling slowly, decrease the compensation capacitance.

8.2.2.2 LED Driver Component Selection

The LED current depends on the TEMPCO bits, PDAC register and CSA and CSB resistors. Changing any of these values affects the LED current and temperature compensation. The following method selects the TEMPCO, PDAC, and CSA resistor value based on the required LED current and temperature compensation. The 100-mA LED current and 1 mA/°C temperature compensation is used as an example for LED A. Repeat the process for LED B.

1. Determine the room temperature current and temperature compensation required by the application.
   - 100mA and 1mA/°C is required by the design.
2. Calculate the compensation in percentage per degree by dividing the compensation coefficient by the current and multiplying by 100.
   - 1 mA/°C divided by 100 mA is 1%/°C.
3. Use Table 8-1 or Table 8-2 to select a TEMPCO setting which contains the required compensation. If the required compensation is in two ranges, use the range with a higher TEMPCO setting. If the required temperature coefficient is not in any of the ranges, choose the TEMPCO and PDAC setting closest to the required temperature coefficient, then go to step 5.
   - 1%/°C is between the mimumum and maximum for TEMPCO = 11.
4. Calculate the target CSA voltage. Divide the driver temperature coefficient [mV/°C] by the desired temperature coefficient [%/°C] and multiply by 100.
   - 1.040 mV/°C divided by 1 %/°C is 104 mV.
5. Calculate the CSA resistor by dividing the target CSA voltage by the required current and subtracting 0.1 Ω for internal resistance.
   - 104 mV divided by 100 mA is 1.04 Ω. Subtract 0.1 Ω to get 0.94 Ω.
6. Select the closest available resistor and calculate the final CSA voltage by multiplying the required current by the total resistance (external and internal).
   - Use a 0.92 Ω resistor. Multiply 100 mA and 1.02 Ω to get 102mV CSA voltage.
7. Calculate the PDAC value by subtracting the final CSA voltage by the specified CSA voltage at PDAC = 0x00 and dividing the result by 1.176 mV (the DAC LSB, equal to 300 mV divided by 255).
   - 102 mV minus 79 mV is 23 mV, divided by 1.176 mV is 20. Write 0x14 to the PDAC register.
8. Calibrate the PDAC value. If using the LED A driver, read the CSA_BIN register bits and add 0x11 if CSA_BIN=00b, add 0x06 if CSA_BIN=01b, subtract 0x06 if CSA_BIN=10b, or subtract 0x11 if CSA_BIN=11b. The CSA_BIN value varies from unit to unit and must be read on each unit calibrated using this method. Alternatively, measure the CSA or CSB voltage using the MCU ADC and adjust PDAC accordingly.
   - The microcontroller reads that a unit has CSA_BIN=01b. 0x20 is written to PDAC_A.

Copyright © 2021 Texas Instruments Incorporated

Table 8-1. Temperature Coefficients for Each TEMPCOA and DAC_A Setting

Register Setting	CSA Voltage [mV], T = 27°C	Temperature Coefficient [mV/°C]	Temperature Coefficient [%/°C]	Coefficient Information
TEMPCOA[1:0] = 11, PDAC_A = 0x00	79	1.040	1.316%	Max for TEMPCO = 11b
TEMPCOA[1:0] = 11, PDAC_A = 0xFF	376	1.040	0.277%	Min for TEMPCO = 11b
TEMPCOA[1:0] = 10, PDAC_A = 0x00	188	0.693	0.369%	Max for TEMPCO = 10b
TEMPCOA[1:0] = 10, PDAC_A = 0xFF	484	0.693	0.143%	Min for TEMPCO = 10b
TEMPCOA[1:0] = 01, PDAC_A = 0x00	277	0.416	0.150%	Max for TEMPCO = 01b
TEMPCOA[1:0] = 01, PDAC_A = 0xFF	572	0.416	0.073%	Min for TEMPCO = 01b
TEMPCOA[1:0] = 00, PDAC_A = 0x00	299	0.347	0.116%	Max for TEMPCO = 00b
TEMPCOA[1:0] = 00, PDAC_A = 0xFF	593	0.347	0.059%	Min for TEMPCO = 00b

Table 8-2. Temperature Coefficients for Each TEMPCOB and DAC_B Setting

Register Setting	CSB Voltage [mV], T = 27°C	Temperature Coefficient [mV/°C]	Temperature Coefficient [%/°C]	Coefficient Information
TEMPCOB[1:0] = 11, PDAC_B = 0x00	81	1.040	1.284%	Max for TEMPCO = 11b
TEMPCOB[1:0] = 11, PDAC_B = 0xFF	379	1.040	0.272%	Min for TEMPCO = 11b
TEMPCOB[1:0] = 10, PDAC_B = 0x00	189	0.693	0.369%	Max for TEMPCO = 10b
TEMPCOB[1:0] = 10, PDAC_B = 0xFF	486	0.693	0.143%	Min for TEMPCO = 10b
TEMPCOB[1:0] = 01, PDAC_B = 0x00	277	0.416	0.150%	Max for TEMPCO = 01b
TEMPCOB[1:0] = 01, PDAC_B = 0xFF	572	0.416	0.073%	Min for TEMPCO = 01b
TEMPCOB[1:0] = 00, PDAC_B = 0x00	299	0.347	0.116%	Max for TEMPCO = 00b
TEMPCOB[1:0] = 00, PDAC_B = 0xFF	594	0.347	0.059%	Min for TEMPCO = 00b

Use the same procedure for the blue LED, requiring 50 mA and 0.1 mA/°C, to calculate TEMPCOB = 10, RCSB = 6.8 Ω, VCSB = 345 mV, PDAC_B = 0x85 (before calibration).

The two drivers are identical, except for the CSA_BIN code to improve the accuracy of the LED_A driver for IR LEDs. Connect the IR LED to the LED A driver and the blue LED to the LED B driver in multi-wave systems.

8.2.2.3 LED Voltage Supply Selection

Each of the LED anodes must have enough voltage to forward bias the LED, regulate the CSA and CSB voltage, and exceed the driver dropout voltage requirement from DINA to CSA and DINB to CSB. A typical IR LED at 100 mA has 1.5-V forward voltage. The LED driver dropout voltage at 100 mA is 300 mV. With the CSA voltage set to 100 mV, the dropout voltage of 300 mV, and forward voltage of 1.5 V, at least 1.9 V must be applied to the IR LED anode for current regulation. Connect the IR LED anode to LEDLDO and set LEDLDO_EN = 1 to charge the IR LED anode capacitor.

A typical blue LED at 50 mA has 4 V forward voltage. For the blue LED, the CSB voltage is 340 mV, the dropout voltage is 300 mV, and the forward voltage is 4 V. Supply over 4.64 V to the anode for the duration of the LED pulse. With a 47 µF capacitor derated to 30 µF, 100 µs LED pulse, the anode voltage drops by 170 mV.

Copyright © 2021 Texas Instruments Incorporated

Thus, the capacitor must be charged to 4.81 V. If the VCC voltage is between 5 V and 6 V, connect the blue LED anode to VCC through a 1-kΩ resistor. If VCC is between 6 V and 15 V, connect the blue LED anode to LEDLDO and set LEDLDO_EN = 1 to charge the blue LED anode capacitor. The LED LDO has a diode voltage drop between the VSLC voltage and LEDLDO voltage. The LEDLDO prevents the DINA pin from exceeding its recommended operating limit of 11.5 V.

8.2.2.4 Regulator Component Selection

To stabilize the output voltage on each regulator, install 1-µF capacitors on VINT, VMCU, and PLDO. Connect the MCUSEL pin to GND to set the MCU LDO voltage to 1.8V. The MCU LDO can be set to other voltages by changing the MCUSEL pin connection. Connect the MCUSEL pin to GND through a 1 nF capacitor to set the MCU LDO voltage to 3.3 V. Connect MCUSEL to VINT to set the MCU LDO to 2.5 V. Connect MCUSEL to GND with a 620-Ω resistor to set the MCU LDO to 1.5 V.

8.2.3 Application Curves

All curves use the schematics shown in Figure 8-1. The photo amplifier curves do not have the 470 kΩ PREF resistor installed.

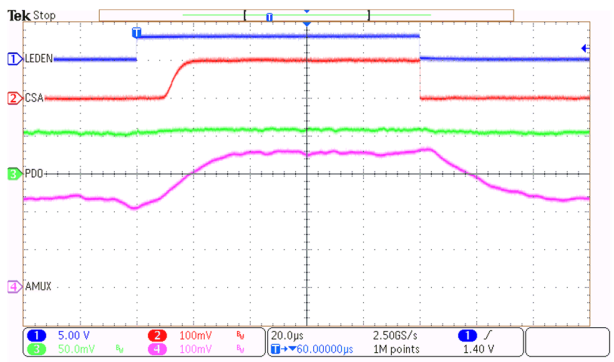

Figure 8-2. LED Driver and Photo Amplifier Waveforms

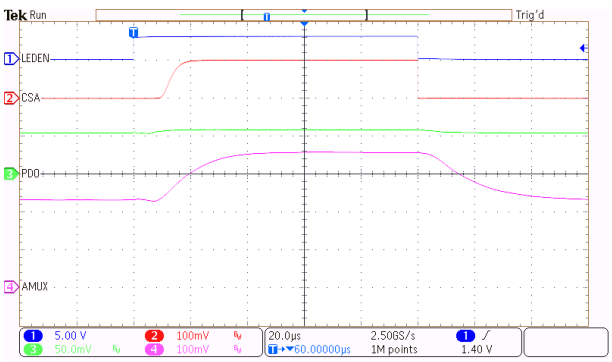

Figure 8-3. LED Driver and Photo Amplifier Waveforms with 128 Averages

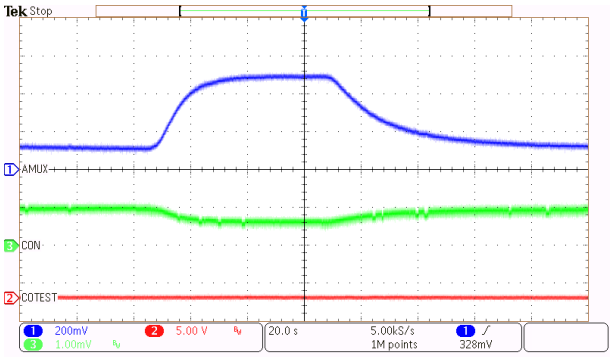

Figure 8-4. Carbon Monoxide Amplifier Waveforms with Calibration Gas

Copyright © 2021 Texas Instruments Incorporated

9 Power Supply Recommendations

A 4.5-V to 15-V power supply is recommended on VCC and VSLC. If a blue LED is used with the LED driver, higher voltage may be required. Ensure the power supply can tolerate transient currents caused by the LED driver. A supply capable of 5 mA average current is generally sufficient. Ensure the power supply's rise time is less than 100 ms.

Copyright © 2021 Texas Instruments Incorporated

10 Layout

10.1 Layout Guidelines

These blocks require careful layout placement:

- Photo amplifier
- CO amplifier
- Ground plane and traces

10.1.1 Photo Amplifier Layout

The photo amplifier is a very sensitive analog block in the TPS8804 device. Minimal trace lengths must be used to connect the photodiode and relevant external components to PDP, PDN, PDO, PREF and AGND. It is recommended to shield the PDP, PDN, PDO, and PREF traces with the AGND plane.

10.1.2 CO Amplifier Layout

Similar to the photo amplifier, the CO amplifier is very sensitive to noise. Connect the CO electrochemical sensor close to the TPS8804 device and shield the COP, CON, and COO traces with the AGND plane.

10.1.3 Ground Plane Layout

Connect AGND and DGND to the ground plane. Ensure there is a short path from AGND to DGND. Route PGND and its associated blocks (LED driver, SLC transmitter) separately from the ground plane. Connect PGND to AGND at a single point near the IC.

10.2 Layout Example

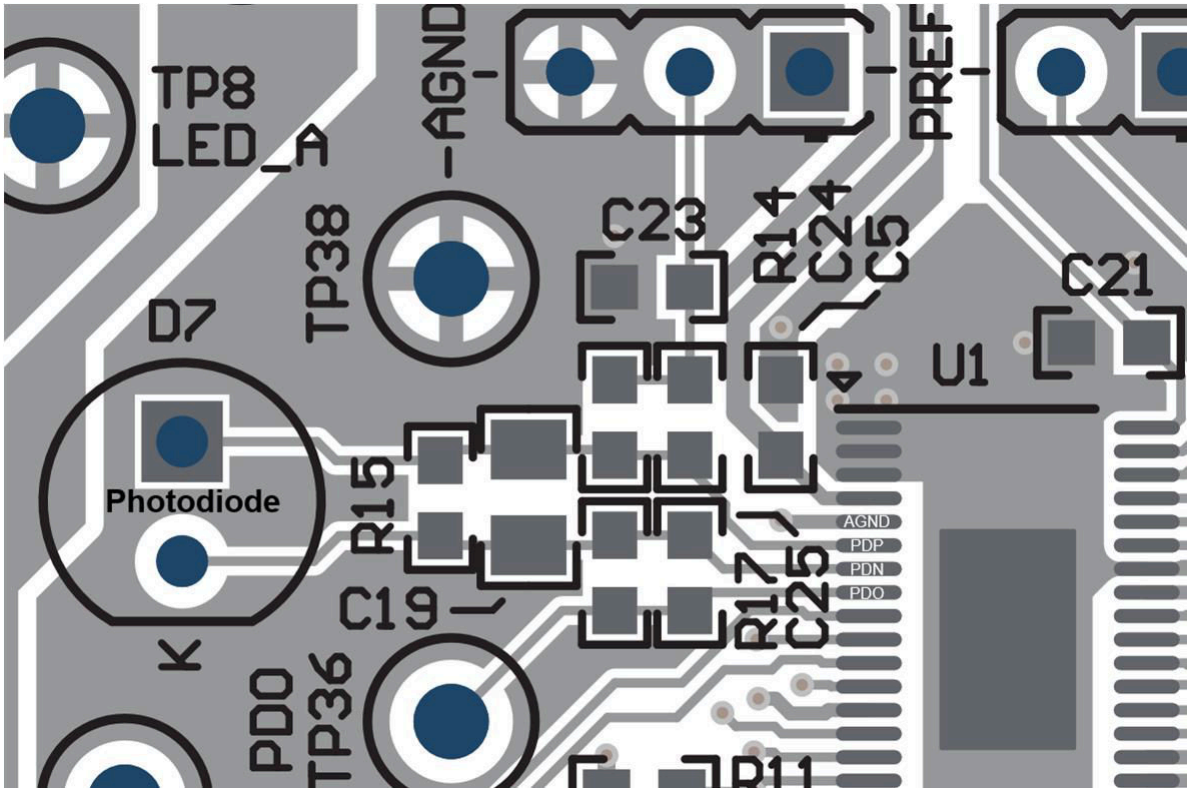

Figure 10-1. Photo Amplifier Layout

Copyright © 2021 Texas Instruments Incorporated

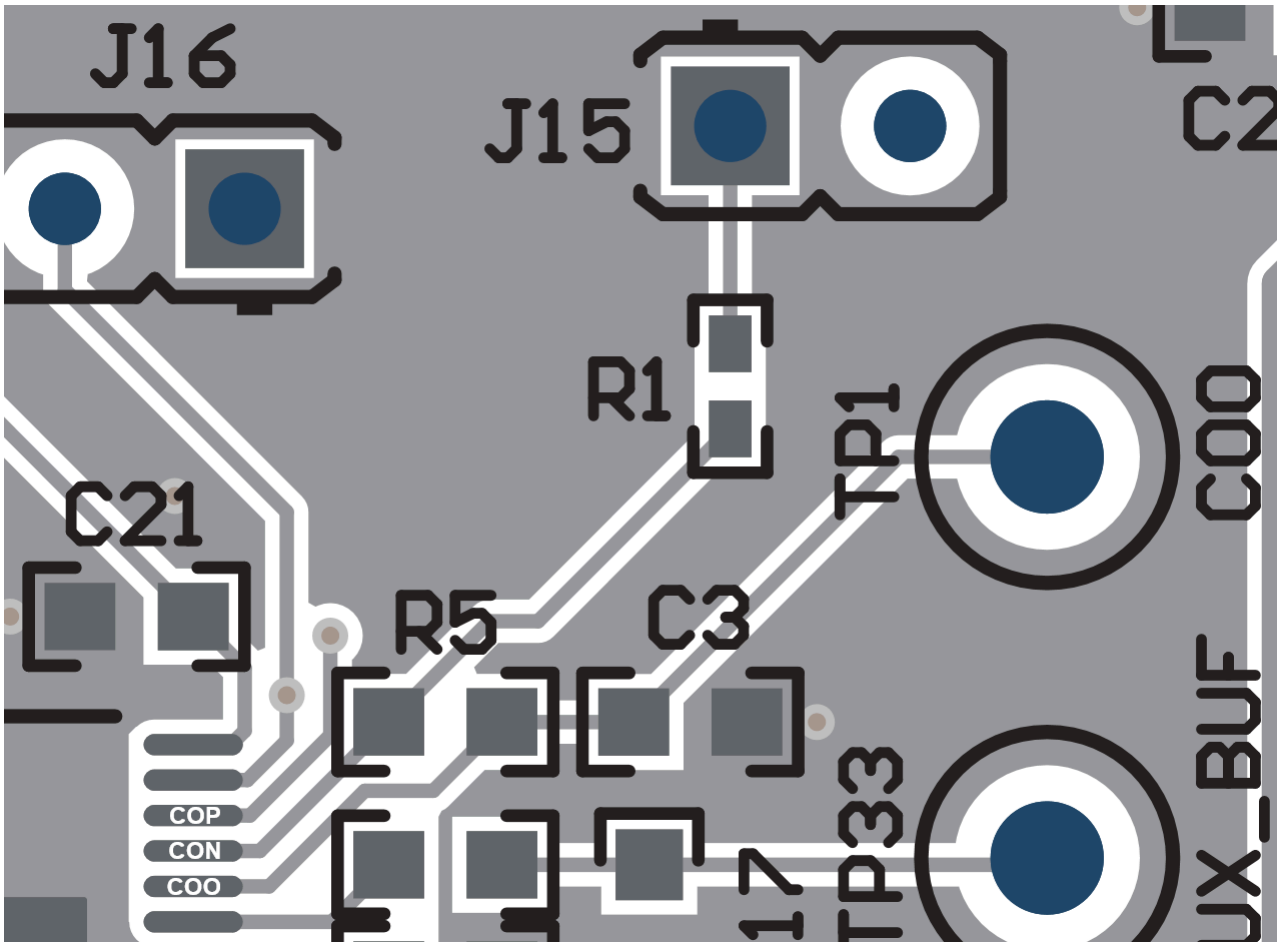

Figure 10-2. CO Amplifier Layout

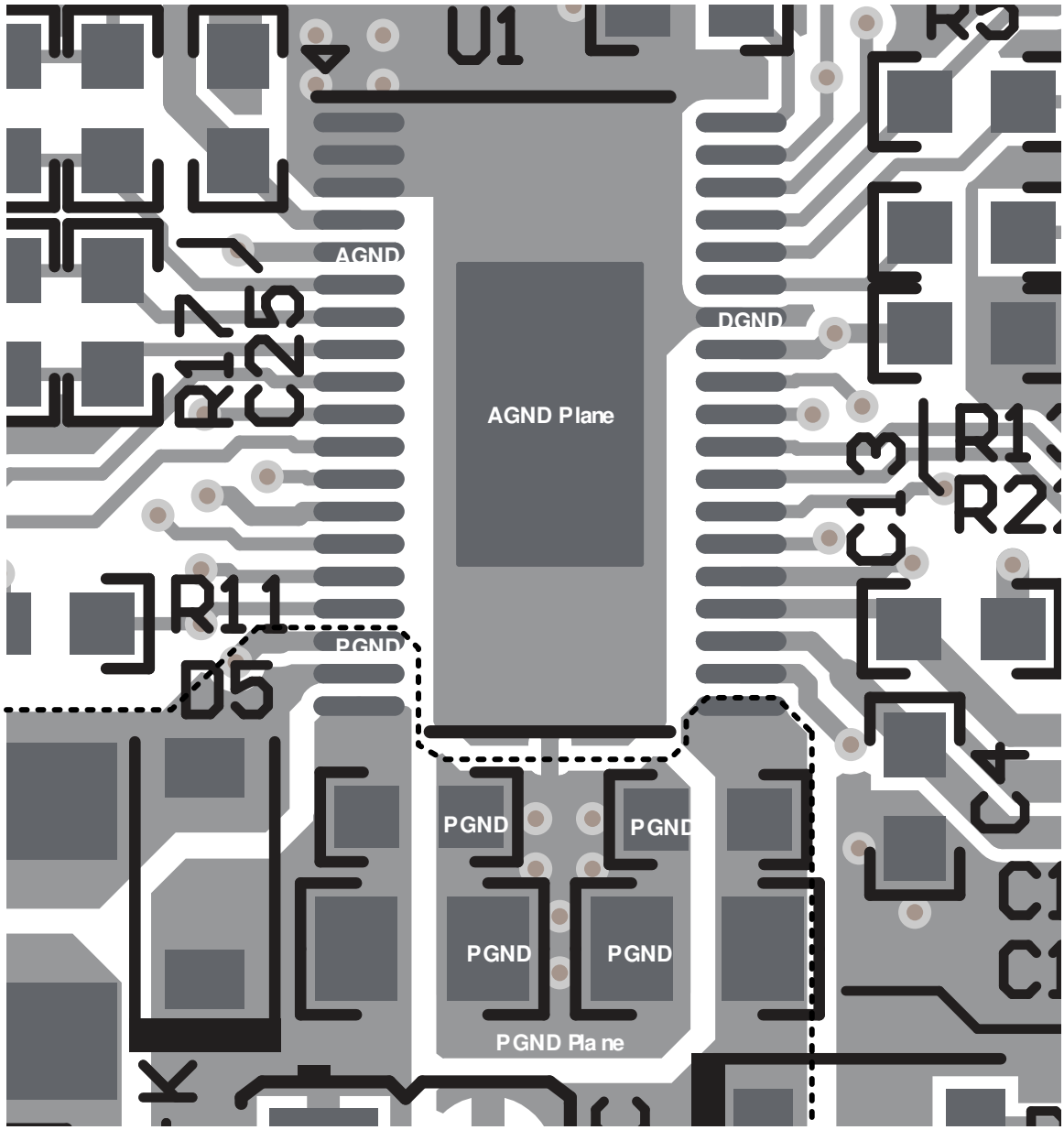

Figure 10-3. Ground Layout

Copyright © 2021 Texas Instruments Incorporated

11 Device and Documentation Support

11.1 Receiving Notification of Documentation Updates

To receive notification of documentation updates, navigate to the device product folder on ti.com. Click on *Subscribe to updates* to register and receive a weekly digest of any product information that has changed. For change details, review the revision history included in any revised document.

11.2 Support Resources

TI E2E™ support forums are an engineer's go-to source for fast, verified answers and design help — straight from the experts. Search existing answers or ask your own question to get the quick design help you need.

Linked content is provided "AS IS" by the respective contributors. They do not constitute TI specifications and do not necessarily reflect TI's views; see TI's Terms of Use.

11.3 Trademarks

TI E2E™ is a trademark of Texas Instruments.
All trademarks are the property of their respective owners.

11.4 Electrostatic Discharge Caution

This integrated circuit can be damaged by ESD. Texas Instruments recommends that all integrated circuits be handled with appropriate precautions. Failure to observe proper handling and installation procedures can cause damage.

ESD damage can range from subtle performance degradation to complete device failure. Precision integrated circuits may be more susceptible to damage because very small parametric changes could cause the device not to meet its published specifications.

11.5 Glossary

TI Glossary	This glossary lists and explains terms, acronyms, and definitions.

12 Mechanical, Packaging, and Orderable Information

The following pages include mechanical, packaging, and orderable information. This information is the most current data available for the designated devices. This data is subject to change without notice and revision of this document. For browser-based versions of this data sheet, refer to the left-hand navigation.

Copyright © 2021 Texas Instruments Incorporated

PACKAGING INFORMATION

Orderable part number	Status (1)	Material type (2)	Package | Pins	Package qty | Carrier	RoHS (3)	Lead finish/ Ball material (4)	MSL rating/ Peak reflow (5)	Op temp (°C)	Part marking (6)
TPS8804DCPR	Active	Production	HTSSOP (DCP) | 38	2000 | LARGE T&R	Yes	NIPDAU	Level-3-260C-168 HR	-40 to 85	TPS8804DCP
TPS8804DCPR.A	Active	Production	HTSSOP (DCP) | 38	2000 | LARGE T&R	Yes	NIPDAU	Level-3-260C-168 HR	-40 to 85	TPS8804DCP

(1) **Status:** For more details on status, see our product life cycle.

(2) **Material type:** When designated, preproduction parts are prototypes/experimental devices, and are not yet approved or released for full production. Testing and final process, including without limitation quality assurance, reliability performance testing, and/or process qualification, may not yet be complete, and this item is subject to further changes or possible discontinuation. If available for ordering, purchases will be subject to an additional waiver at checkout, and are intended for early internal evaluation purposes only. These items are sold without warranties of any kind.

(3) **RoHS values:** Yes, No, RoHS Exempt. See the TI RoHS Statement for additional information and value definition.

(4) **Lead finish/Ball material:** Parts may have multiple material finish options. Finish options are separated by a vertical ruled line. Lead finish/Ball material values may wrap to two lines if the finish value exceeds the maximum column width.

(5) **MSL rating/Peak reflow:** The moisture sensitivity level ratings and peak solder (reflow) temperatures. In the event that a part has multiple moisture sensitivity ratings, only the lowest level per JEDEC standards is shown. Refer to the shipping label for the actual reflow temperature that will be used to mount the part to the printed circuit board.

(6) **Part marking:** There may be an additional marking, which relates to the logo, the lot trace code information, or the environmental category of the part.

Multiple part markings will be inside parentheses. Only one part marking contained in parentheses and separated by a "~" will appear on a part. If a line is indented then it is a continuation of the previous line and the two combined represent the entire part marking for that device.

Important Information and Disclaimer: The information provided on this page represents TI's knowledge and belief as of the date that it is provided. TI bases its knowledge and belief on information provided by third parties, and makes no representation or warranty as to the accuracy of such information. Efforts are underway to better integrate information from third parties. TI has taken and continues to take reasonable steps to provide representative and accurate information but may not have conducted destructive testing or chemical analysis on incoming materials and chemicals. TI and TI suppliers consider certain information to be proprietary, and thus CAS numbers and other limited information may not be available for release.

In no event shall TI's liability arising out of such information exceed the total purchase price of the TI part(s) at issue in this document sold by TI to Customer on an annual basis.

TAPE AND REEL INFORMATION

REEL DIMENSIONS

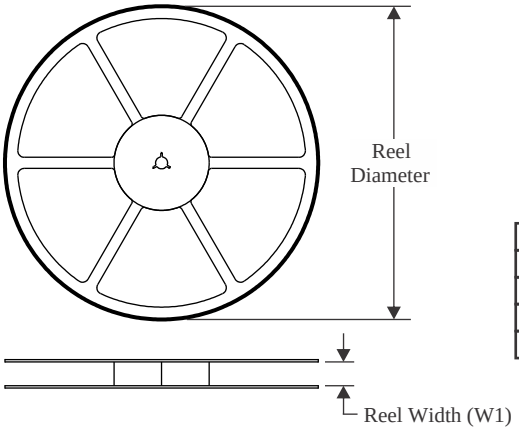

TAPE DIMENSIONS

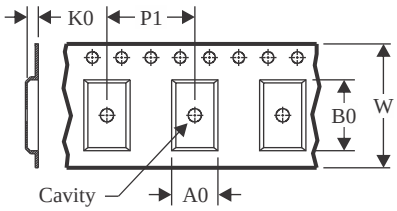

A0	Dimension designed to accommodate the component width
B0	Dimension designed to accommodate the component length
K0	Dimension designed to accommodate the component thickness
W	Overall width of the carrier tape
P1	Pitch between successive cavity centers

QUADRANT ASSIGNMENTS FOR PIN 1 ORIENTATION IN TAPE

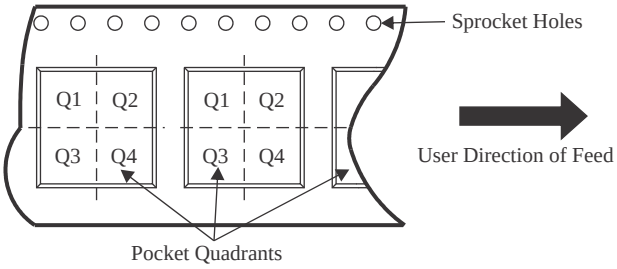

*All dimensions are nominal

Device	Package Type	Package Drawing	Pins	SPQ	Reel Diameter (mm)	Reel Width W1 (mm)	A0 (mm)	B0 (mm)	K0 (mm)	P1 (mm)	W (mm)	Pin1 Quadrant
TPS8804DCPR	HTSSOP	DCP	38	2000	330.0	16.4	6.9	10.2	1.8	12.0	16.0	Q1
TPS8804DCPR	HTSSOP	DCP	38	2000	330.0	16.4	6.9	10.2	1.8	12.0	16.0	Q1

TAPE AND REEL BOX DIMENSIONS

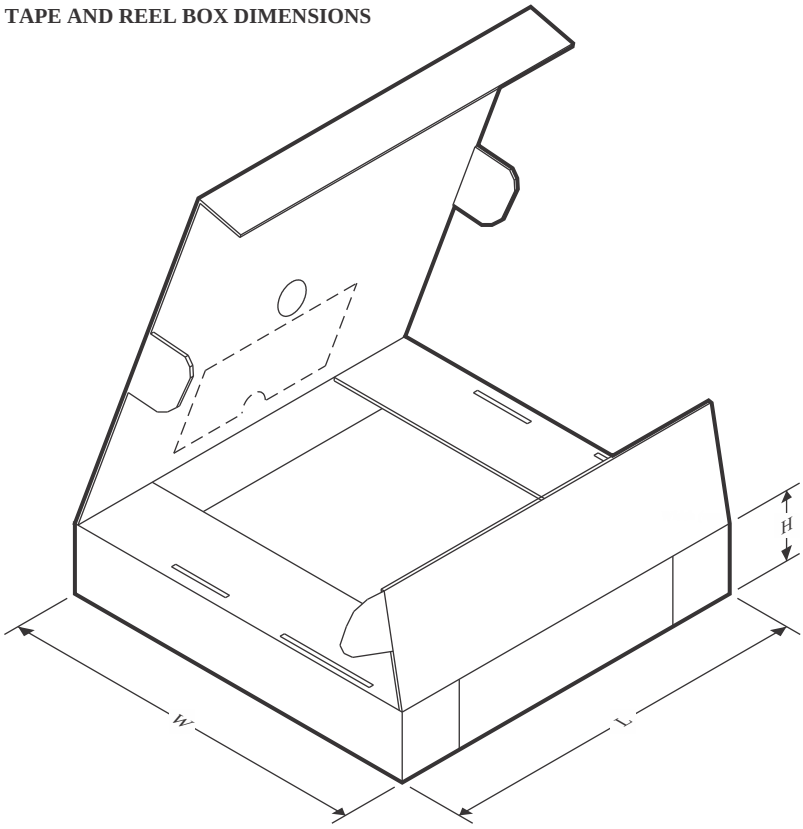

*All dimensions are nominal

Device	Package Type	Package Drawing	Pins	SPQ	Length (mm)	Width (mm)	Height (mm)
TPS8804DCPR	HTSSOP	DCP	38	2000	367.0	367.0	38.0
TPS8804DCPR	HTSSOP	DCP	38	2000	356.0	356.0	35.0

GENERIC PACKAGE VIEW

DCP 38

PowerPAD TSSOP - 1.2 mm max height

4.4 x 9.7, 0.5 mm pitch

SMALL OUTLINE PACKAGE

This image is a representation of the package family, actual package may vary.
Refer to the product data sheet for package details.

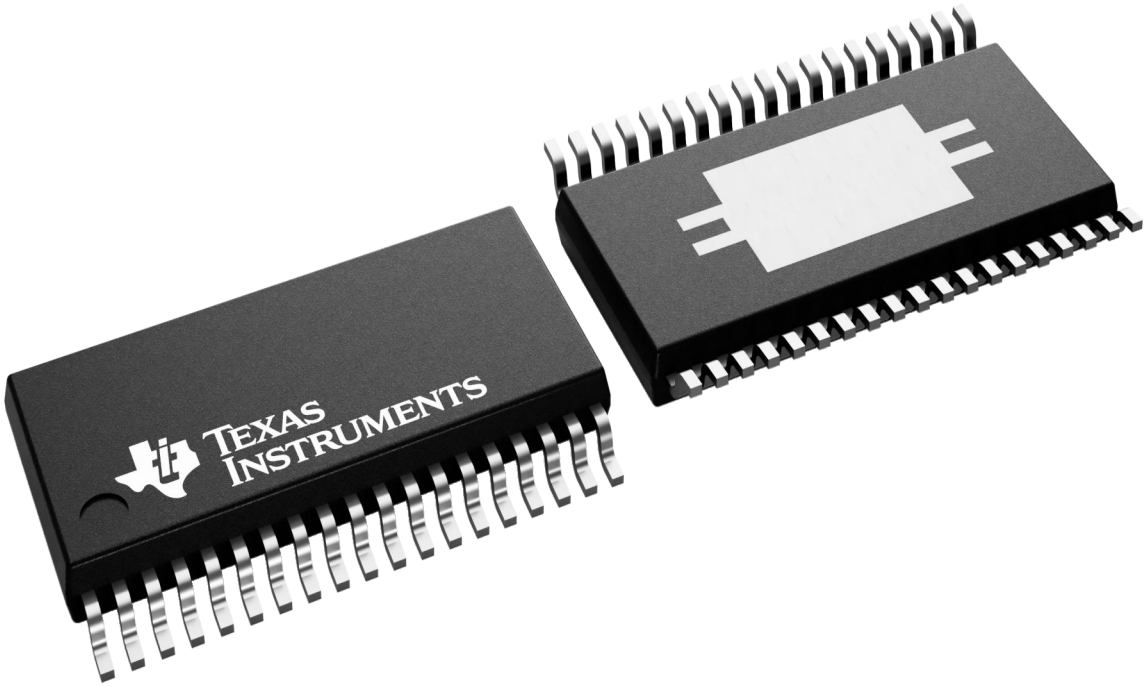

4224560/B

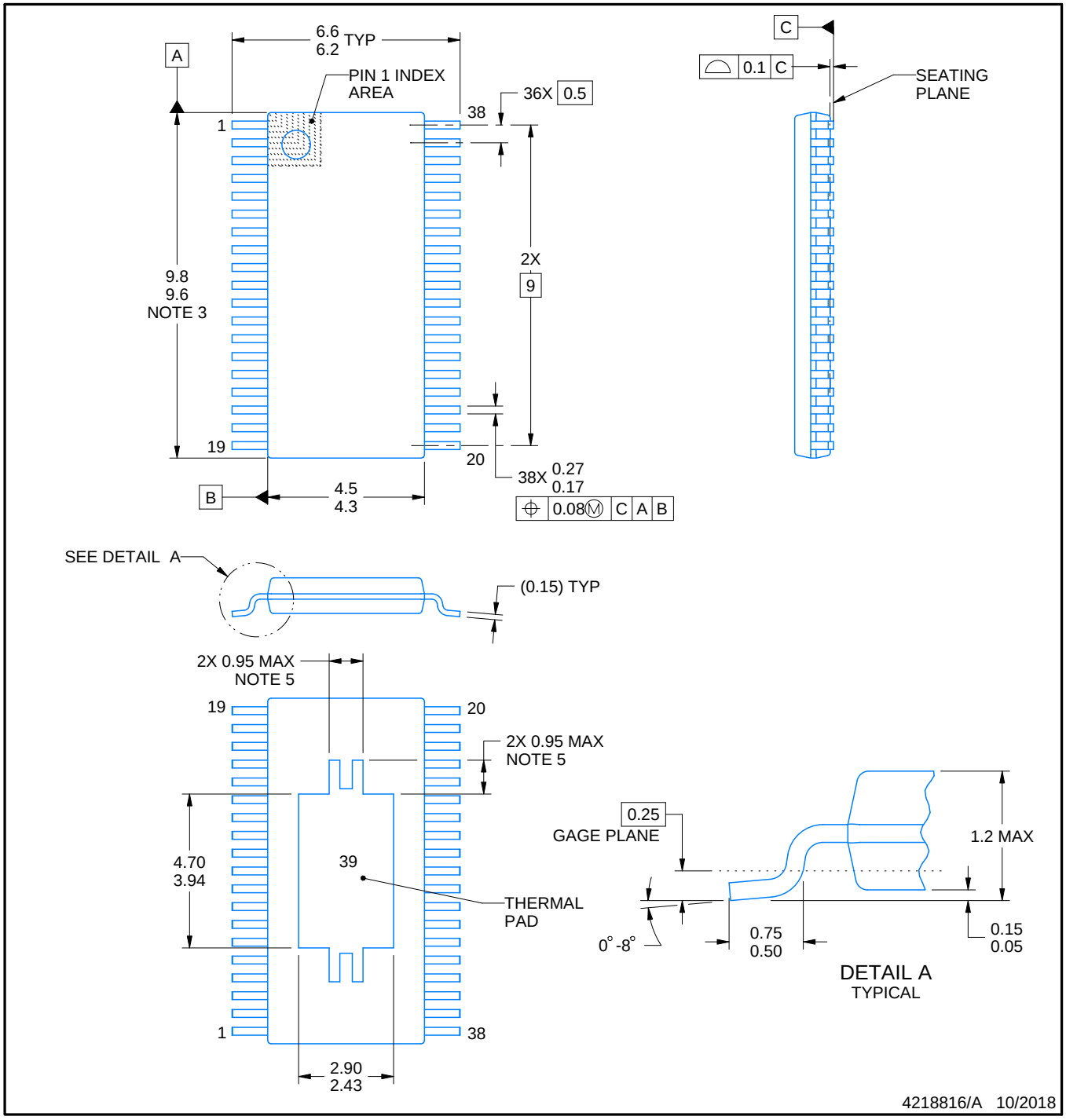

PowerPAD is a trademark of Texas Instruments.

NOTES:

1. All linear dimensions are in millimeters. Any dimensions in parenthesis are for reference only. Dimensioning and tolerancing per ASME Y14.5M.
2. This drawing is subject to change without notice.
3. This dimension does not include mold flash, protrusions, or gate burrs. Mold flash, protrusions, or gate burrs shall not exceed 0.15 mm per side.
4. Reference JEDEC registration MO-153.
5. Features may differ or may not be present.

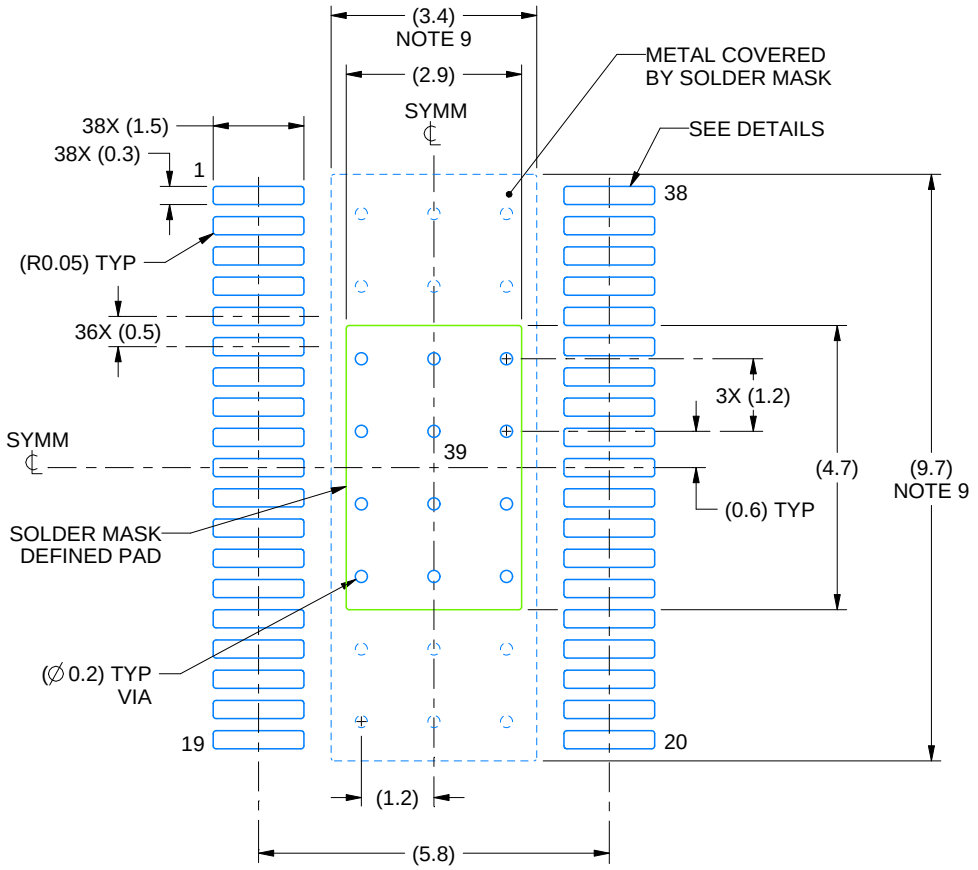

LAND PATTERN EXAMPLE
EXPOSED METAL SHOWN
SCALE: 8X

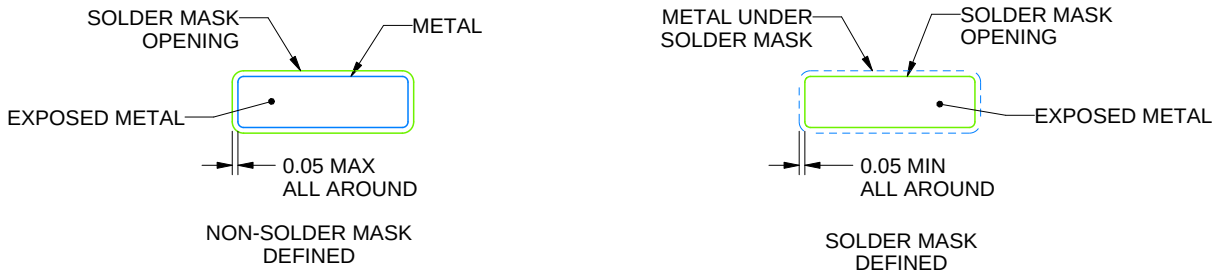

SOLDER MASK DETAILS

4218816/A 10/2018

NOTES: (continued)

6. Publication IPC-7351 may have alternate designs.
7. Solder mask tolerances between and around signal pads can vary based on board fabrication site.
8. This package is designed to be soldered to a thermal pad on the board. For more information, see Texas Instruments literature numbers SLMA002 (www.ti.com/lit/slma002) and SLMA004 (www.ti.com/lit/slma004).
9. Size of metal pad may vary due to creepage requirement.
10. Vias are optional depending on application, refer to device data sheet. It is recommended that vias under paste be filled, plugged or tented.

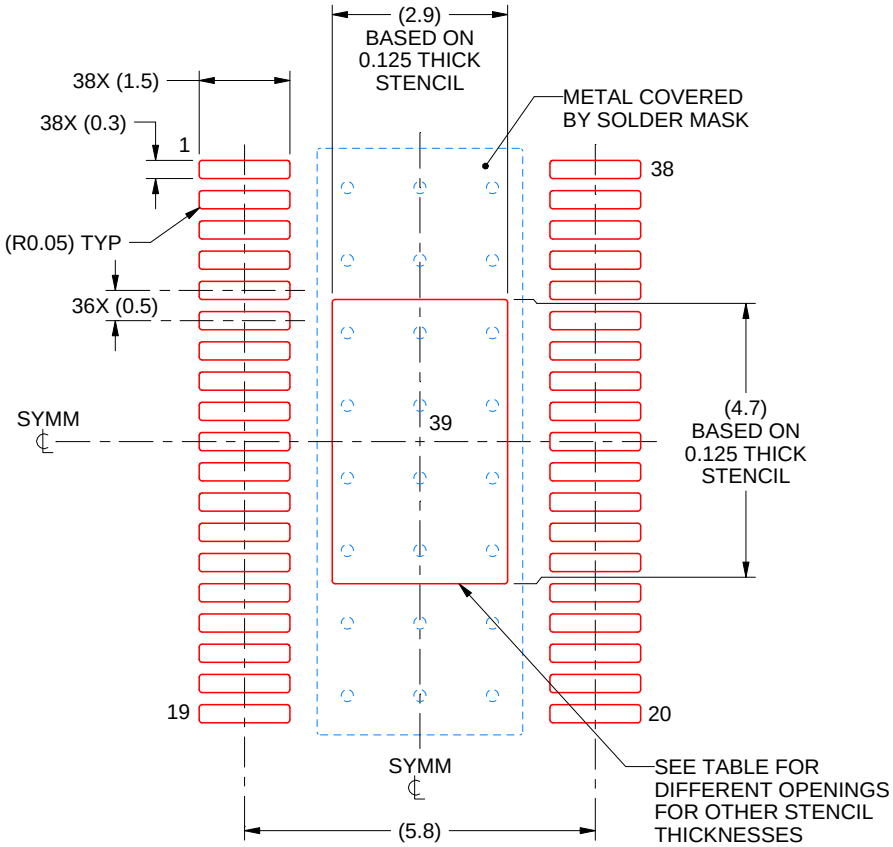

SOLDER PASTE EXAMPLE
BASED ON 0.125 mm THICK STENCIL
SCALE: 8X

STENCIL THICKNESS	SOLDER STENCIL OPENING
0.1	3.24 X 5.25
0.125	2.90 X 4.70 (SHOWN)
0.15	2.65 X 4.29
0.175	2.45 X 3.97

4218816/A 10/2018

NOTES: (continued)

11. Laser cutting apertures with trapezoidal walls and rounded corners may offer better paste release. IPC-7525 may have alternate design recommendations.
12. Board assembly site may have different recommendations for stencil design.

IMPORTANT NOTICE AND DISCLAIMER

TI PROVIDES TECHNICAL AND RELIABILITY DATA (INCLUDING DATA SHEETS), DESIGN RESOURCES (INCLUDING REFERENCE DESIGNS), APPLICATION OR OTHER DESIGN ADVICE, WEB TOOLS, SAFETY INFORMATION, AND OTHER RESOURCES “AS IS” AND WITH ALL FAULTS, AND DISCLAIMS ALL WARRANTIES, EXPRESS AND IMPLIED, INCLUDING WITHOUT LIMITATION ANY IMPLIED WARRANTIES OF MERCHANTABILITY, FITNESS FOR A PARTICULAR PURPOSE OR NON-INFRINGEMENT OF THIRD PARTY INTELLECTUAL PROPERTY RIGHTS.

These resources are intended for skilled developers designing with TI products. You are solely responsible for (1) selecting the appropriate TI products for your application, (2) designing, validating and testing your application, and (3) ensuring your application meets applicable standards, and any other safety, security, regulatory or other requirements.

These resources are subject to change without notice. TI grants you permission to use these resources only for development of an application that uses the TI products described in the resource. Other reproduction and display of these resources is prohibited. No license is granted to any other TI intellectual property right or to any third party intellectual property right. TI disclaims responsibility for, and you will fully indemnify TI and its representatives against, any claims, damages, costs, losses, and liabilities arising out of your use of these resources.

TI’s products are provided subject to TI’s Terms of Sale or other applicable terms available either on ti.com or provided in conjunction with such TI products. TI’s provision of these resources does not expand or otherwise alter TI’s applicable warranties or warranty disclaimers for TI products.

TI objects to and rejects any additional or different terms you may have proposed.

Mailing Address: Texas Instruments, Post Office Box 655303, Dallas, Texas 75265
Copyright © 2025, Texas Instruments Incorporated