LP8550 High-Efficiency LED Backlight Driver for Notebooks

1 Features

- High-Voltage DC/DC Boost Converter with Integrated FET with Four Switching Frequency Options: 156/312/625/1250 kHz
- 2.7-V to 22-V Input Voltage Range to Support 1x to 5x Cell Li-Ion Batteries
- Programmable PWM Resolution
  - 8 to 13 True Bits (Steady State)
  - Additional 1 to 3 Bits Using Dithering During Brightness Changes
- I^2C and PWM Brightness Control
- Automatic PWM & Current Dimming for Improved Efficiency
- PWM output frequency and LED Current set through Resistors
- Optional Synchronization to Display VSYNC Signal
- Six LED Outputs with LED Fault (Short/Open) Detection
- Low Input Voltage, Overtemperature, Overcurrent Detection, and Shutdown
- Minimum Number of External Components

2 Applications

- Notebook and Netbook LCD Display LED Backlight
- LED Lighting

3 Description

The LP8550 is a white-LED driver with integrated boost converter. It has six adjustable current sinks which can be controlled by PWM input or with I^2C-compatible serial interface. The boost converter has adaptive output voltage control based on the LED driver voltages. This feature minimizes the power consumption by adjusting the voltage to lowest sufficient level in all conditions.

LED outputs have 8-bit current resolution and up to 13-bit PWM resolution with additional 1- to 3-bit dithering to achieve smooth and precise brightness control. Proprietary Phase Shift PWM control is used for LED outputs to reduce peak current from the boost converter, thus making the boost capacitors smaller. The Phase Shifting scheme also eliminates audible noise.

Automatic PWM dimming at lower brightness values and current dimming at higher brightness values can be used to improve the optical efficiency. Internal EEPROM is used for storing the configuration data. This makes it possible to have minimum external component count and make the solution very small.

The LP8550 has safety features which make it possible to detect LED outputs with open or short fault — low input voltage and boost overcurrent conditions are monitored, and chip is turned off in case of these events. Thermal de-rating function prevents overheating of the device by reducing backlight brightness when set temperature has been reached.

Device Information(1)

PART NUMBER	PACKAGE	BODY SIZE (MAX)
LP8550	DSBGA (25)	2.49 x 2.49 mm

(1) For all available packages, see the orderable addendum at the end of the datasheet.

Simplified Schematic

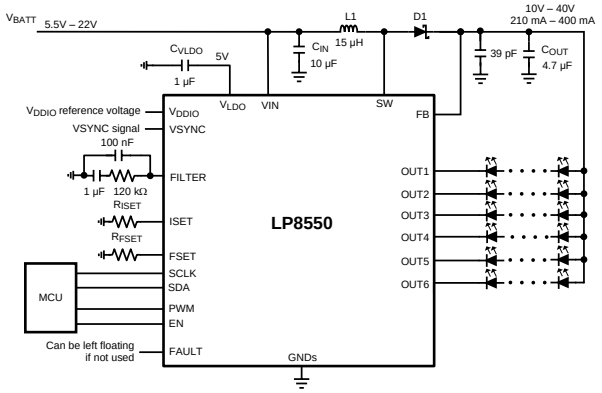

LED Efficiency

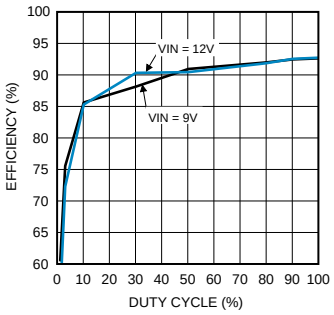

An IMPORTANT NOTICE at the end of this data sheet addresses availability, warranty, changes, use in safety-critical applications, intellectual property matters and other important disclaimers. PRODUCTION DATA.

Table of Contents

1 **Features** ... 1
2 **Applications** ... 1
3 **Description** ... 1
4 **Revision History** ... 2
5 **Device Default Values** ... 3
6 **Pin Configuration and Functions** ... 4
7 **Specifications** ... 5
7.1 Absolute Maximum Ratings ... 5
7.2 Handling Ratings ... 5
7.3 Recommended Operating Conditions ... 5
7.4 Thermal Information ... 6
7.5 Electrical Characteristics ... 6
7.6 Boost Converter Electrical Characteristics ... 6
7.7 LED Driver Electrical Characteristics ... 7
7.8 PWM Interface Characteristics ... 7
7.9 Undervoltage Protection ... 8
7.10 Logic Interface Characteristics ... 8
7.11 I^2C Serial Bus Timing Parameters (SDA, SCLK) ... 8
7.12 Typical Characteristics ... 9
8 **Detailed Description** ... 11
8.1 Overview ... 11
8.2 Functional Block Diagram ... 12
8.3 Feature Description ... 12
8.4 Device Functional Modes ... 21
8.5 Programming ... 22
8.6 Register Maps ... 26
9 **Application and Implementation** ... 36
9.1 Application Information ... 36
9.2 Typical Applications ... 36
10 **Power Supply Recommendations** ... 40
11 **Layout** ... 40
11.1 Layout Guidelines ... 40
11.2 Layout Examples ... 41
12 **Device and Documentation Support** ... 43
12.1 Trademarks ... 43
12.2 Electrostatic Discharge Caution ... 43
12.3 Glossary ... 43
13 **Mechanical, Packaging, and Orderable Information** ... 43

4 Revision History

NOTE: Page numbers for previous revisions may differ from page numbers in the current version.

Changes from Revision D (November 2013) to Revision E	Page
• Changed formatting to match new TI datasheet guidelines; added Device Information and Handling Ratings tables, Power Supply Recommendations, Layout, and Device and Documentation Support sections; moved some curves to Application Curves section, reformatted Detailed Description and Application and Implementation sections, adding additional content.	1

Changes from Revision C (May 2013) to Revision D	Page
• Added note re EEPROM	25
• Added note re: EEPROM	30

Copyright © 2010–2014, Texas Instruments Incorporated

5 Device Default Values

ADDR	EEPROM DEFAULT VALUE
A0h	1010 0001
A1h	0110 0000
A2h	1001 1111
A3h	0011 1111
A4h	0000 1000
A5h	1000 1010
A6h	0110 0100
A7h	0010 1001

6 Pin Configuration and Functions

25 DSBGA (YZR) Top View

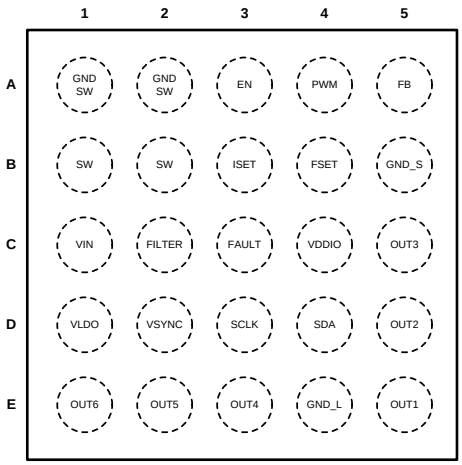

25 DSBGA (YZR) Bottom View

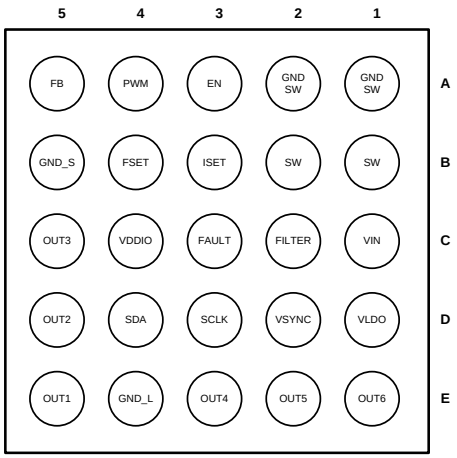

Pin Functions

PIN		TYPE(1)	DESCRIPTION
NUMBER	NAME		
A1	GND_SW	G	Boost switch ground
A2	GND_SW	G	Boost switch ground
A3	EN	I	Enable input pin
A4	PWM	A	PWM dimming input. This pin must be connected to GND if not used.
A5	FB	A	Boost feedback input
B1	SW	A	Boost switch
B2	SW	A	Boost switch
B3	ISET	A	Set resistor for LED current. This pin can be left floating if not used.
B4	FSET	A	PWM frequency set resistor. This pin can be left floating if not used.
B5	GND_S	G	Signal ground
C1	VIN	P	Input power supply up to 22 V. If 2.7 V ≤ V_{BATT} < 5.5 V (Figure 31) then external 5-V rail must be used for V_{LDO} and VIN.
C2	FILTER	A	Low pass filter for PLL. This pin can be left floating if not used.
C3	FAULT	OD	Fault indication output. If not used, can be left floating.
C4	V_{DDIO}	P	Digital IO reference voltage (1.65 V to 5 V) for I^2C interface. If brightness is controlled with PWM input pin then this pin can be connected to GND.
C5	OUT3	A	Current sink output
D1	V_{LDO}	P	LDO output voltage. External 5-V rail can be connected to this pin in low voltage application.
D2	VSYNC	I	V_{SYNC} input. This pin must be connected to GND if not used.
D3	SCLK	I	Serial clock. This pin must be connected to GND if not used.
D4	SDA	I/O	Serial data. This pin must be connected to GND if not used.
D5	OUT2	A	Current sink output
E1	OUT6	A	Current sink output
E2	OUT5	A	Current sink output
E3	OUT4	A	Current sink output
E4	GND_L	G	LED ground
E5	OUT1	A	Current sink output

(1) A: Analog Pin, G: Ground Pin, P: Power Pin, I: Input Pin, I/O: Input/Output Pin, O: Output Pin, OD: Open Drain Pin

Copyright © 2010–2014, Texas Instruments Incorporated

7 Specifications

7.1 Absolute Maximum Ratings

over operating free-air temperature range (unless otherwise noted) (1)(2)

	MIN	MAX	UNIT
V_{IN}	–0.3	24	V
V_{LDO}	–0.3	6	
Voltage on logic pins (VSYNC, PWM, EN, SCLK, SDA)	–0.3	6	
Voltage on logic pin (FAULT)	–0.3	V_{VDDIO} + 0.3	
Voltage on analog pins (FILTER, V_{DDIO}, ISET, FSET)	–0.3	6	
V (OUT1...OUT6, SW, FB)	–0.3	44	
Continuous power dissipation (3)	Internally Limited		
Junction temperature (T_{J-MAX})		125	°C
Maximum lead temperature (soldering)	See (4)		

(1) Stresses beyond those listed under *Absolute Maximum Ratings* may cause permanent damage to the device. These are stress ratings only, which do not imply functional operation of the device at these or any other conditions beyond those indicated under *Recommended Operating Conditions*. Exposure to absolute-maximum-rated conditions for extended periods may affect device reliability.
(2) If Military/Aerospace specified devices are required, please contact the TI Sales Office/Distributors for availability and specifications.
(3) Internal thermal shutdown circuitry protects the device from permanent damage. Thermal shutdown engages at T_J = 150°C (typ.) and disengages at T_J = 130°C (typ.).
(4) For detailed soldering specifications and information, please refer to Application Report AN-1112 *DSBGA Wafer Level Chip Scale Package* (SNVA009).

7.2 Handling Ratings

			MIN	MAX	UNIT
T_{stg}	Storage temperature range		–65	150	°C
$V_{(ESD)}$	Electrostatic discharge	Human body model (HBM), per ANSI/ESDA/JEDEC JS-001, all pins (1)	-2	2	kV
		Charged device model (CDM), per JEDEC spec. JESD22-C101, all pins (2)	–200	200	V
		Machine model	–1	1	kV

(1) JEDEC document JEP155 states that 500-V HBM allows safe manufacturing with a standard ESD control process.
(2) JEDEC document JEP157 states that 250-V CDM allows safe manufacturing with a standard ESD control process.

7.3 Recommended Operating Conditions

over operating free-air temperature range (unless otherwise noted) (1)(2)

		MIN	NOM	MAX	UNIT
V_{IN} (Figure 27)	Input voltage range	5.5		22	V
V_{IN} + V_{LDO} (Figure 31)		4.5		5.5	
V_{DDIO}		1.65		5	
V(OUT1...OUT6, SW, FB)		0		40	
T_J	Junction temperature	–30		125	°C
T_A (3)	Ambient temperature	–30		85	

(1) Stresses beyond those listed under *Absolute Maximum Ratings* may cause permanent damage to the device. These are stress ratings only, which do not imply functional operation of the device at these or any other conditions beyond those indicated under *Recommended Operating Conditions*. Exposure to absolute-maximum-rated conditions for extended periods may affect device reliability.
(2) All voltages are with respect to the potential at the GND pins.
(3) In applications where high power dissipation and/or poor package thermal resistance is present, the maximum ambient temperature may have to be derated. Maximum ambient temperature (T_{A-MAX}) is dependent on the maximum operating junction temperature ($T_{J-MAX-OP}$ = 125°C), the maximum power dissipation of the device in the application (P_{D-MAX}), and the junction-to ambient thermal resistance of the part/package in the application ($R_{\theta JA}$), as given by the following equation: $T_{A-MAX} = T_{J-MAX-OP} – (R_{\theta JA} \times P_{D-MAX})$.

Copyright © 2010–2014, Texas Instruments Incorporated

7.4 Thermal Information

THERMAL METRIC[1]		DSBGA 25 PINS	UNIT
$R_{\theta JA}$	Junction-to-ambient thermal resistance [2]	40 - 73	°C/W

(1) For more information about traditional and new thermal metrics, see the *IC Package Thermal Metrics* application report, SPRA953.
(2) Junction-to-ambient thermal resistance is highly application and board-layout dependent. In applications where high maximum power dissipation exists, special care must be paid to thermal dissipation issues in board design.

7.5 Electrical Characteristics[1][2]

Limits are for T_A = 25°C (unless otherwise specified); V_{IN} = 12 V, V_{DDIO} = 2.8 V, C_{VLDO} = 1 µF, L1 = 15 µH, C_{IN} = 10 µF, C_{OUT} = 10 µF. R_{ISET} = 16 kΩ, unless otherwise specified. [3]

PARAMETER		TEST CONDITIONS	MIN	TYP	MAX	UNIT
I_{IN}	Standby supply current	Internal LDO disabled EN=L and PWM=L			1 [4]	µA
	Normal mode supply current	LDO enabled, boost enabled, no current going through LED outputs 5-MHz PLL Clock		3		mA
		10-MHz PLL Clock		3.7		
		20-MHz PLL Clock		4.7		
		40-MHz PLL Clock		6.7		
f_{OSC}	Internal oscillator frequency accuracy		–4% –7% [4]		4% 7% [4]	
V_{LDO}	Internal LDO voltage		4.5 [4]	5	5.5 [4]	V
I_{LDO}	Internal LDO external loading				5	mA

(1) All voltages are with respect to the potential at the GND pins.
(2) Minimum (MIN) and Maximum (MAX) limits are specified by design, test, or statistical analysis. Typical numbers represent the most likely norm.
(3) Low-ESR Surface-Mount Ceramic Capacitors (MLCCs) used in setting electrical characteristics.
(4) Limits apply over the full operating ambient temperature range (–30°C ≤ T_A ≤ 85°C).

7.6 Boost Converter Electrical Characteristics

PARAMETER		TEST CONDITIONS	MIN	TYP	MAX	UNIT
RDS_{ON}	Switch ON resistance	I_{SW} = 0.5 A		0.12		Ω
V_{MAX}	Boost maximum output voltage			40		V
I_{LOAD}	Maximum continuous load current	9 V ≤ V_{BATT}, V_{OUT} = 35 V		450		mA
		6 V ≤ V_{BATT}, V_{OUT} = 35 V		300		
		3 V ≤ V_{BATT}, V_{OUT} = 25 V		180		
V_{OUT}/V_{IN}	Conversion ratio	f_{SW} = 1.25 MHz			10	
f_{SW}	Switching frequency	BOOST_FREQ = 00 BOOST_FREQ = 01 BOOST_FREQ = 10 BOOST_FREQ = 11		156 312 625 1250		kHz
V_{OV}	Overvoltage protection voltage			V_{BOOST} + 1.6V		V
t_{PULSE}	Switch pulse minimum width	no load		50		ns
$t_{STARTUP}$	Start-up time	Note [1]		6		ms
I_{MAX}	SW pin current limit	BOOST_IMAX = 0 BOOST_IMAX = 1		1.4 2.5		A

(1) Start-up time is measured from the moment boost is activated until the V_{OUT} crosses 90% of its target value.

Copyright © 2010–2014, Texas Instruments Incorporated

7.7 LED Driver Electrical Characteristics

PARAMETER		TEST CONDITIONS	MIN	TYP	MAX	UNIT
$I_{LEAKAGE}$	Leakage current	Outputs OUT1 to OUT6, V_{OUT} = 40 V		0.1	1	µA
I_{MAX}	Maximum source current OUT1 to OUT6	EN_I_RES = 0, CURRENT[7:0] = FFh		30		mA
		EN_I_RES = 1, CURRENT[7:0] = FFh		50		
I_{OUT}	Output current accuracy(1)	Output current set to 23 mA, EN_I_RES = 1	–3% -4%(2)		3% 4%(2)	
I_{MATCH}	Matching(1)	Output current set to 23 mA, EN_I_RES = 1		0.5%		
PWM_{RES}	PWM output resolution(3)	f_{LED} = 5 kHz, f_{PLL} = 5 MHz		10		bits
		f_{LED} = 10 kHz, f_{PLL} = 5 MHz		9		
		f_{LED} = 20 kHz, f_{PLL} = 5 MHz		8		
		f_{LED} = 5 kHz, f_{PLL} = 40 MHz		13		
		f_{LED} = 10 kHz, f_{PLL} = 40 MHz		12		
		f_{LED} = 20 kHz, f_{PLL} = 40 MHz		11		
f_{LED}	LED switching frequency(3)	PWM_FREQ[4:0] = 00000b PLL clock 5 MHz		600		Hz
		PWM_FREQ[4:0] = 11111b PLL clock 5 MHz		19.2k		
V_{SAT}	Saturation voltage(4)	Output current set to 20 mA		105	220(5)	mV
		Output current set to 30 mA		160	290(5)	

(1) Output Current Accuracy is the difference between the actual value of the output current and programmed value of this current. Matching is the maximum difference from the average. For the constant current sinks on the part (OUT1 to OUT6), the following are determined: the maximum output current (MAX), the minimum output current (MIN), and the average output current of all outputs (AVG). Two matching numbers are calculated: (MAX-AVG)/AVG and (AVG-MIN/AVG). The largest number of the two (worst case) is considered the matching figure. The typical specification provided is the most likely norm of the matching figure for all parts. Note that some manufacturers have different definitions in use.
(2) Limits apply over the full operating ambient temperature range (–30°C ≤ T_A ≤ 85°C).
(3) PWM output resolution and frequency depend on the PLL settings. Please see section *PWM Frequency Setting* for full description.
(4) Saturation voltage is defined as the voltage when the LED current has dropped 10% from the value measured at 1 V.
(5) Limits apply over the full operating ambient temperature range (–30°C ≤ T_A ≤ 85°C).

7.8 PWM Interface Characteristics

PARAMETER		TEST CONDITIONS	MIN	TYP	MAX	UNIT
f_{PWM}	PWM frequency range		0.1		25	kHz
t_{MIN_ON}	Minimum pulse ON time			1		µs
t_{MIN_OFF}	Minimum pulse OFF time			1		
$t_{STARTUP}$	Turnon delay from standby to backlight on	PWM input active, EN pin rise from low to high		6		ms
T_{STBY}	Turn off delay	PWM input low time for turn off, slope disabled		50		ms
PWM_{RES}	PWM input resolution	f_{IN} < 9 kHz f_{IN} < 4.5 kHz f_{IN} < 2.2 kHz f_{IN} < 1.1 kHz		10 11 12 13		bits

Copyright © 2010–2014, Texas Instruments Incorporated

7.9 Undervoltage Protection

PARAMETER		TEST CONDITIONS	MIN	TYP	MAX	UNIT
V_{UVLO}	V_{IN} UVLO threshold voltage	UVLO[1:0] = 00		Disabled		V
		UVLO[1:0] = 01, falling	2.55	2.70	2.94	
		UVLO[1:0] = 01, rising	2.62	2.76	3.00	
		UVLO[1:0] = 10, falling	5.11	5.40	5.68	
		UVLO[1:0] = 10, rising	5.38	5.70	5.98	
		UVLO[1:0] = 11, falling	7.75	8.10	8.45	
		UVLO[1:0] = 11, rising	8.36	8.73	9.20	

7.10 Logic Interface Characteristics

PARAMETER		TEST CONDITIONS	MIN	TYP	MAX	UNIT
LOGIC INPUT EN						
V_{IL}	Input low level				0.4 (1)	V
V_{IH}	Input high level		1.2 (1)			V
I_I	Input current		-1 (1)		1 (1)	µA
LOGIC INPUT VSYNC						
V_{IL}	Input low level				0.4 (1)	V
V_{IH}	Input high level		2.2 (1)			V
I_I	Input current		–1 (1)		1 (1)	µA
f_{VSYNC}	Frequency range		58	60	55000	Hz
LOGIC INPUT PWM						
V_{IL}	Input low level				0.4 (1)	V
V_{IH}	Input high level		2.2 (1)			V
I_I	Input current		–1 (1)		1 (1)	µA
LOGIC INPUTS SCL, SDA						
V_{IL}	Input low level				$0.2xV_{DDIO}$ (1)	V
V_{IH}	Input high level		$0.8xV_{DDIO}$ (1)			V
I_I	Input current		–1 (1)		1 (1)	µA
LOGIC OUTPUTS SDA, FAULT						
V_{OL}	Output low level	I_{OUT} = 3 mA (pull-up current)		0.3	0.5 (1)	V
I_L	Output leakage current	V_{OUT} = 2.8 V	–1 (1)		1 (1)	µA

(1) Limits apply over the full operating ambient temperature range (–30°C ≤ T_A ≤ 85°C).

7.11 I²C Serial Bus Timing Parameters (SDA, SCLK) (1)

		MIN	MAX	UNIT
f_{CLK}	Clock frequency		400	kHz
1	Hold time (repeated) START condition	0.6		µs
2	Clock low time	1.3		µs
3	Clock high time	600		ns
4	Setup time for a repeated START condition	600		ns
5	Data hold time	50		ns
6	Data setup time	100		ns
7	Rise time of SDA and SCL	$20+0.1C_b$	300	ns
8	Fall time of SDA and SCL	$15+0.1C_b$	300	ns
9	Setup time for STOP condition	600		ns
10	Bus free time between a STOP and a START condition	1.3		µs

(1) Specified by design. Not production tested. V_{DDIO} = 1.65 V to 5.5 V.

Copyright © 2010–2014, Texas Instruments Incorporated

I²C Serial Bus Timing Parameters (SDA, SCLK) (1) (continued)

		MIN	MAX	UNIT
C_b	Capacitive load parameter for each bus line Load of 1 pF corresponds to 1 ns.	10	200	ns

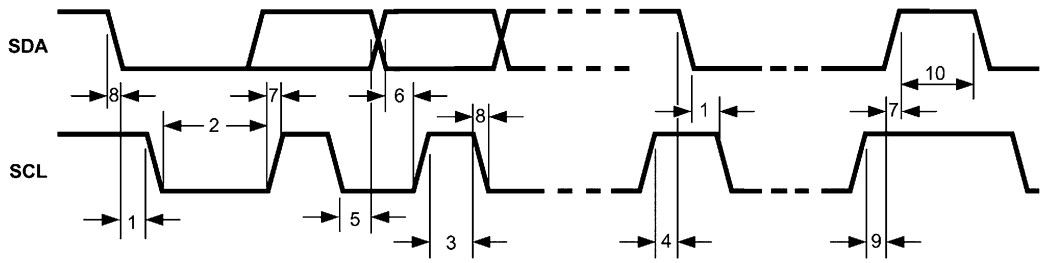

Figure 1. I²C Timing Diagram

7.12 Typical Characteristics

Unless otherwise specified: V_{BATT} = 12 V, C_{VLDO} = 1 µF, L1 = 33 µH, C_{IN} = 10 µF, C_{OUT} = 10 µF

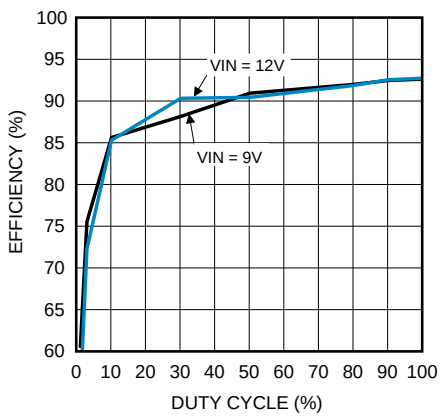

f_{LED} = 9.6 kHz

Figure 2. LED Drive Efficiency

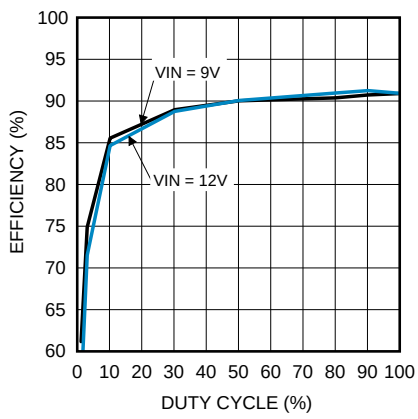

f_{LED} = 9.6 kHz L1 = 15 µH

Figure 3. LED Drive Efficiency

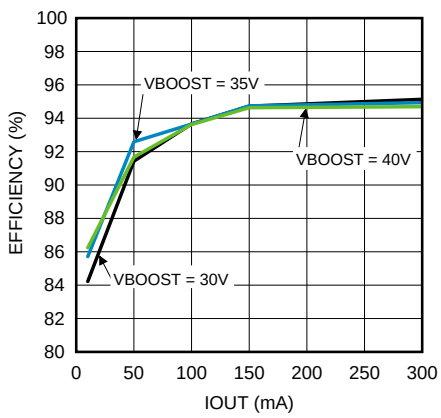

Figure 4. Boost Converter Efficiency

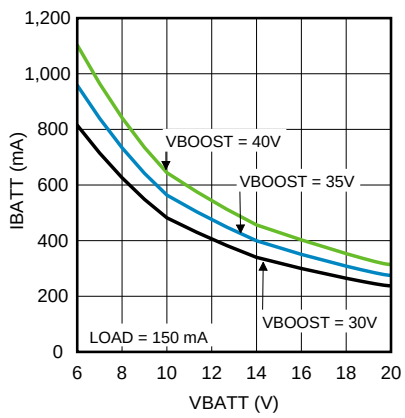

Figure 5. Battery Current

Typical Characteristics (continued)

Unless otherwise specified: V_{BATT} = 12 V, C_{VLDO} = 1 µF, L1 = 33 µH, C_{IN} = 10 µF, C_{OUT} = 10 µF

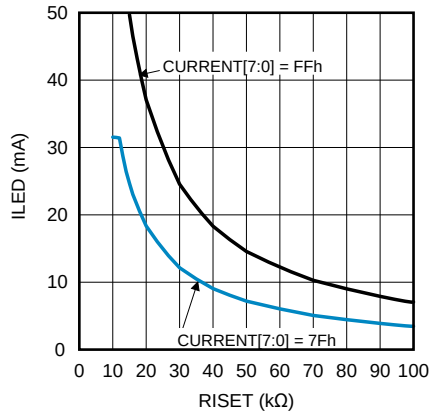

Figure 6. I_{LED} vs. R_{ISET}

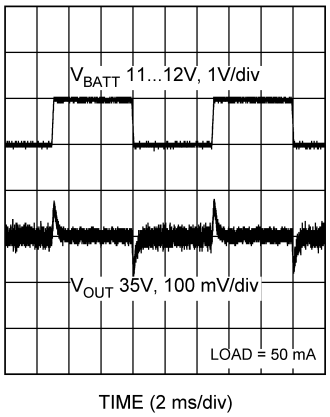

Figure 7. Boost Line Transient Response

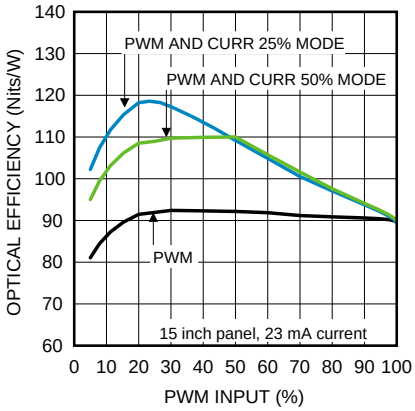

Figure 8. Optical Efficiency With 15-inch Panel

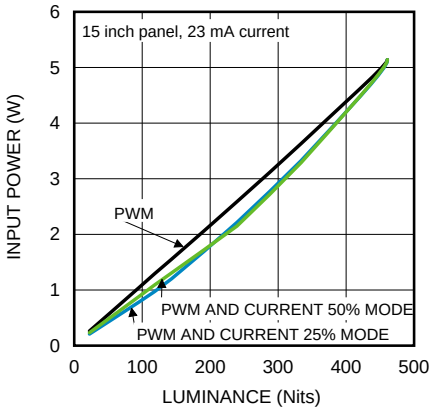

Figure 9. Input Power vs. Luminance

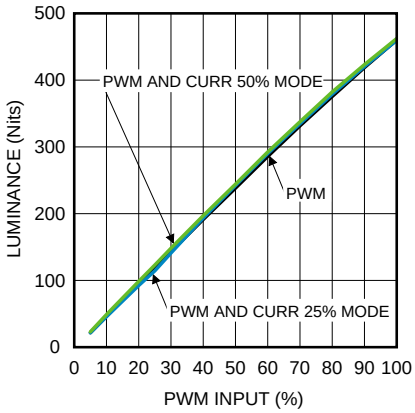

Figure 10. Luminance vs. PWM Input

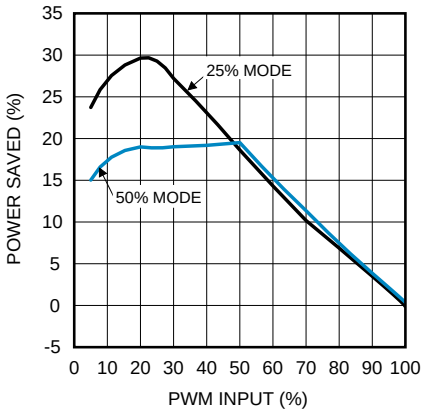

Figure 11. Power Saved with PWM & Current Mode Compared to PWM Mode

Copyright © 2010–2014, Texas Instruments Incorporated

8 Detailed Description

8.1 Overview

LP8550 is a high voltage LED driver for medium-sized LCD backlight applications. It includes high voltage boost converter. Boost voltage automatically sets to the correct level needed to drive the LED strings. This is done by monitoring LED output voltage drop in real time.

Six LED outputs are driven either with constant current sinks with PWM control or by controlling both PWM and current. Constant current value is set with EEPROM bits and with R_{ISET} resistor. Brightness (PWM) is controlled either with I^2C register or with PWM input. PWM frequencies are set with EEPROM bits and with R_{FSET} resistor. Special Phase-Shift PWM mode can be used to reduce boost output current peak, thus reducing output ripple, capacitor size and audible noise.

With LP8550 it is possible to synchronize the PWM output frequency to V_{SYNC} signal received from video processor. Internal PLL ensures that the PWM output clock is always synchronized to the V_{SYNC} signal.

Special dithering mode makes it possible to increase output resolution during fading between two brightness values and by this making the transition look very smooth with virtually no stepping. Transition slope time can be adjusted with EEPROM bits.

Safety features include LED fault detection with open and short detection. LED fault detection prevents system overheating in case of open in some of the LED strings. Chip internal temperature is constantly monitored and based on this LP8550 can reduce the brightness of the backlight to reduce thermal loading once certain trip point is reached. Threshold is programmable in EEPROM. If chip internal temperature reaches too high, the boost converter and LED outputs are completely turned off until the internal temperature has reached acceptable level. Boost converter is protected against too high load current and over-voltage. LP8550 notifies the system about the fault through I^2C register and with FAULT pin.

EEPROM programmable functions include:

- PWM frequencies
- Phase shift PWM mode
- LED constant current
- Boost output frequency
- Temperature thresholds
- Slope for brightness changes
- Dithering options
- PWM output resolution
- Boost control bits

External components R_{ISET} and R_{FSET} can also be used for selecting the output current and PWM frequencies.

8.2 Functional Block Diagram

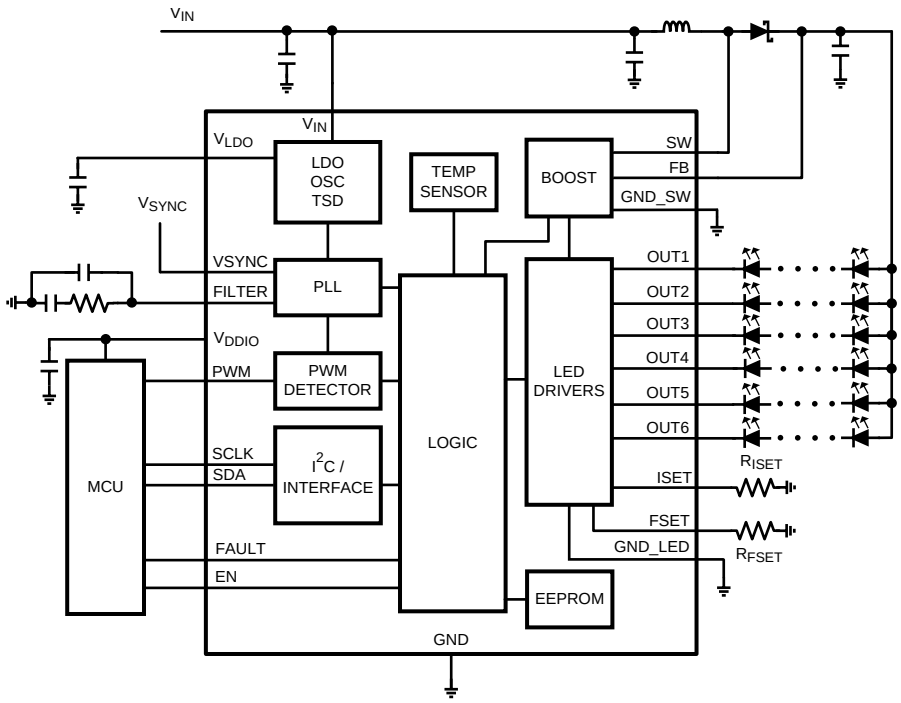

8.3 Feature Description

8.3.1 Clock Generation

LP8550 has internal 5-MHz oscillator which is used for clocking the boost converter, state machine, PWM input duty cycle measurement, internal timings such as slope time for output brightness changes.

Internal clock can be used for generating the PWM output frequency. In this case the 5-MHz clock can be multiplied with the internal PLL to achieve higher resolution. The higher the clock frequency for PWM generation block, the higher the resolution but the tradeoff is higher I_Q of the part. Clock multiplication is set with <PWM_RESOLUTION[1:0]> EEPROM Bits.

The PLL can also be used for generating the required PWM generation clock from the V_{SYNC} signal. This makes sure that the LED output PWM is always synchronized to the V_{SYNC} signal and there is no clock variation between LCD display video update and the LED backlight output frequency. Also H_{SYNC} signal up to 55 kHz can be used.

PLL has internal counter which has 13-bit control <PLL[12:0]> to achieve correct output clock frequency based on the V_{SYNC} frequency.

It can take a couple of seconds for the PLL to synchronize to 60-Hz V_{SYNC} signal in start-up and before this correct PWM clock frequency is generated from internal oscillator. FILTER pin component selection affects the time it takes from the PLL to lock to V_{SYNC} signal.

Special logic is implemented for allowing steady clock frequency even if there are missing VSYNC pulses. In case pulses are randomly left out, the LP8550 can generate the pulses internally while keeping the same PWM output frequency. When VSYNC pulses are available again, the internal logic automatically switches to the external VSYNC clock without glitch.

Copyright © 2010–2014, Texas Instruments Incorporated

Feature Description (continued)

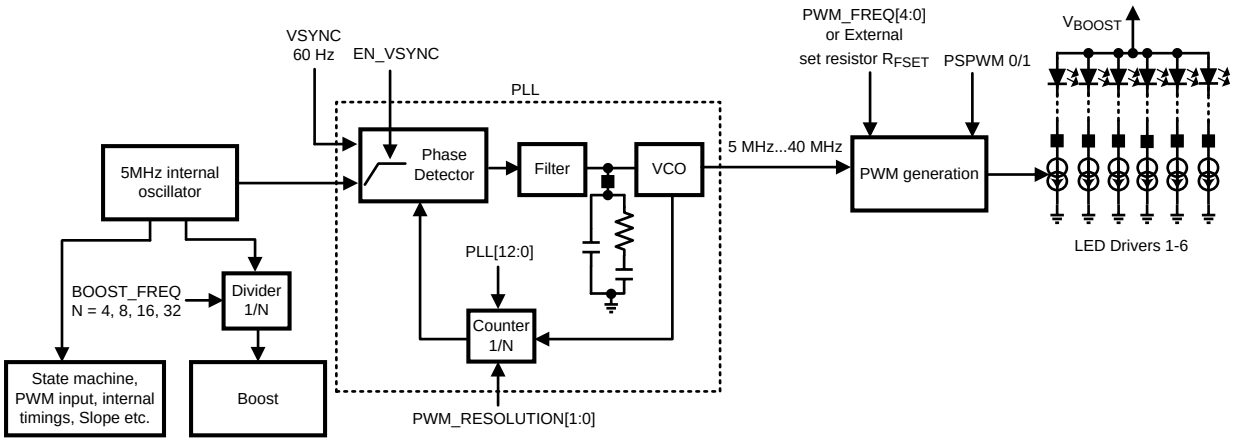

Figure 12. Principle Of The Clock Generation

8.3.2 Brightness Control Methods

LP8550 controls the brightness of the backlight with PWM. PWM control is received either from PWM input pin or from I^{2}C register bits. The PWM source selection is done with <BRT_MODE[1:0]> bits as follows:

BRT_MODE[1]	BRT_MODE[0]	PWM SOURCE
0	0	PWM input pin duty cycle control. Default.
0	1	PWM input pin duty cycle control.
1	0	Brightness register
1	1	PWM direct control (PWM in = PWM out)

8.3.2.1 PWM Input Duty Cycle

With PWM input pin duty cycle control the output PWM is controlled by PWM input duty cycle. PWM detector block measures the duty cycle in the PWM pin and uses this 13-bit value to generate the output PWM. Output PWM can have different frequency than input in this mode and also phase shift PWM mode can be used. Slope and dither are effective in this mode. PWM input resolution is defined by the input PWM clock frequency.

8.3.2.2 Brightness Register Control

With brightness register control the output PWM is controlled with 8-bit resolution <BRT7:0> register bits. Phase shift scheme can be used with this and the output PWM frequency can be freely selected. Slope and dither are effective in this mode.

8.3.2.3 PWM Direct Control

With PWM direct control the output PWM directly follows the input PWM. Due to the internal logic structure the input is anyway clocked with the 5 MHz clock or the PLL clock. PSPWM mode is not possible in this mode. Slope and dither are not effective in this mode.

8.3.2.4 PWM Calculation Data Flow

Figure 13 shows a flow chart of the PWM calculation data flow. In PWM direct control mode most of the blocks are bypassed and this flow chart does not apply.

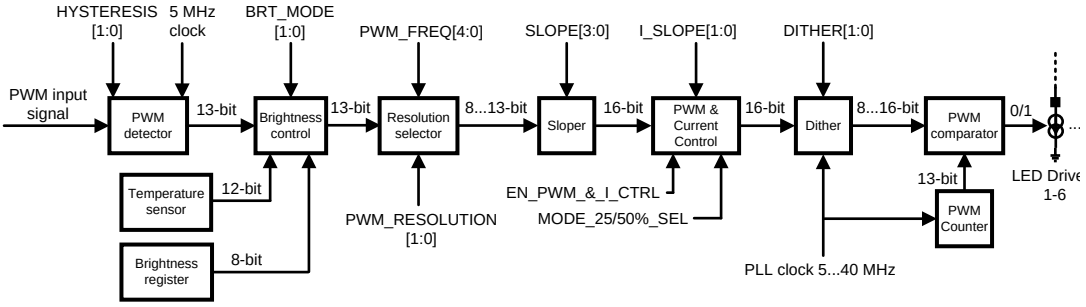

Figure 13. PWM Calculation Data Flow

8.3.2.5 PWM Detector

The PWM detector block measures the duty cycle of the input PWM signal. Resolution depends on the input signal frequency. Hysteresis selection sets the minimum allowable change to the input. If smaller change is detected, it is ignored. With hysteresis the constant changing between two brightness values is avoided if there is small jitter in the input signal.

8.3.2.6 Brightness Control

Brightness control block gets 13-bit value from the PWM detector, 12-bit value from the temperature sensor and also 8-bit value from the brightness register. <BRT_MODE[1:0]> selects whether to use PWM input duty cycle value or the brightness register value as described earlier. Based on the temperature sensor value the duty cycle is reduced if the temperature has reached the temperature limit set to the <TEMP_LIM[1:0]> EEPROM bits.

8.3.2.7 Resolution Selector

Resolution selector takes the necessary MSB bits from the input data to match the output resolution. For example if 11-bit resolution is used for output, then 11 MSB bits are selected from the input. Dither bits are not taken into account for the output resolution. This is to make sure that in steady state condition, there is no dithering used for the output.

8.3.2.8 Sloper

Sloper makes the smooth transition from one brightness value to another. Slope time can be adjusted from 0 to 500 ms with <SLOPE[3:0]> EEPROM bits. The sloper output is 16-bit value.

8.3.2.9 PWM & Current Control

Automatic PWM & current control improves the optical efficiency of the LEDs by using PWM control with small brightness values and current control with bigger values. <EN_PWM_&_I_CTRL > EEPROM bit selects whether the PWM & current control is used instead of PWM control or not. PWM to current dimming switch point can be set to 25% or 50% of the brightness range with <MODE_25/50_SEL> EEPROM bit. Current slope can be adjusted by using the <I_SLOPE[1:0]> EEPROM bits.

8.3.2.10 Dither

With dithering the output resolution can be “artificially” increased during sloping from one brightness value to another. This way the brightness change steps are not visible to eye. Dithering can be from 0 to 3 bits, and is selected with <DITHER[1:0]> EEPROM bits.

8.3.2.11 PWM Comparator

The PWM counter clocks the PWM comparator based on the duty cycle value received from Dither block. Output of the PWM comparator controls directly the LED drivers. If PSPWM mode is used, then the signal to each LED output is delayed certain amount.

Copyright © 2010–2014, Texas Instruments Incorporated

8.3.2.12 Current Setting

Maximum current of the LED outputs is controlled with CURRENT[7:0] EEPROM register bits linearly from 0 to 30 mA. If <EN_I_RES> = 1 the maximum LED output current can be scaled also with external resistor, R_{ISET}. R_{ISET} controls the LED current as shown in Equation 1:

$$I_{LED} = \frac{600 * 1.23V}{R_{ISET}} * \frac{CURRENT\ [7:0]}{255} \tag{1}$$

Default value for CURRENT[7:0] = 7Fh (127d). Therefore, the output current can be calculated as shown in Equation 2:

$$R_{ISET} = \frac{600 * 1.23}{I_{LED}} * \frac{1}{2} = \frac{369}{I_{LED}} \tag{2}$$

For example, if a 16-kΩ R_{ISET} resistor is used, then the LED maximum current is 23 mA. Please note: formula is only approximation for the actual current.

8.3.2.13 PWM Frequency Setting

PWM frequency is selected with PWM_FREQ[4:0] EEPROM register. If PLL clock frequency multiplication is used, the output PWM frequency is also affected. <PWM_RESOLUTION[1:0]> EEPROM bits select the PLL output frequency and hence the PWM frequency and resolution. Table 1 lists PWM frequencies with <EN_VSYNC]> = 0. PWM resolution setting effects the PLL clock frequency (5 MHz to 40 MHz). Highlighted frequencies with boldface can be selected also with external resistor R_{FSET}. To activate R_{FSET} frequency selection the <EN_F_RES> EEPROM bit must be 1.

Table 1. Available PWM Frequencies and Resolutions

PWM_RES[1:0]	00	01	10	11	
PWM_FREQ[4:0]	**5 MHz**	**10 MHz**	**20 MHz**	**40 MHz**	**RESOLUTION (bits)**
11111	**19232**	-	-	-	8
11110	**16828**	-	-	-	8
11101	**14424**	-	-	-	8
11100	**12020**	-	-	-	8
11011	**9616**	**19232**	-	-	9
11010	**7963**	**15927**	-	-	9
11001	**6386**	**12771**	-	-	9
11000	**4808**	**9616**	**19232**	-	10
10111	4658	9316	18631	-	10
10110	4508	9015	18030	-	10
10101	4357	**8715**	17429	-	10
10100	4207	8414	16828	-	10
10011	4057	8114	**16227**	-	10
10010	3907	**7813**	15626	-	10
10001	3756	7513	15025	-	10
10000	3606	7212	**14424**	-	10
01111	3456	6912	13823	-	10
01110	3306	6611	13222	-	10
01101	3155	**6311**	12621	-	10
01100	3005	6010	**12020**	-	10
01011	2855	5710	11419	-	10
01010	2705	5409	10818	-	10
01001	2554	5109	10217	-	10
01000	2404	**4808**	**9616**	**19232**	11
00111	2179	4357	8715	**17429**	11
00110	1953	3907	**7813**	**15626**	11

Copyright © 2010–2014, Texas Instruments Incorporated

Table 1. Available PWM Frequencies and Resolutions (continued)

PWM_RES[1:0]	00	01	10	11	
PWM_FREQ[4:0]	**5 MHz**	**10 MHz**	**20 MHz**	**40 MHz**	**RESOLUTION (bits)**
00101	1728	3456	6912	13823	11
00100	1503	3005	**6010**	**12020**	11
00011	1202	2404	**4808**	**9616**	12
00010	1052	2104	4207	**8414**	12
00001	826	1653	3306	**6611**	12
00000	601	1202	2404	**4808**	13

R_{FSET} resistance values with corresponding PWM frequencies:

Table 2. PWM Frequency Selection with Resistor

PWM_RES[1:0]	00		01		10		11	
RFSET (kΩ)	**5 MHz CLOCK**	**RESOLUTION**	**10 MHz CLOCK**	**RESOLUTION**	**20 MHz CLOCK**	**RESOLUTION**	**40 MHz CLOCK**	**RESOLUTION**
10...15	19232	8	19232	9	19232	10	19232	11
26...29	16828	8	15927	9	16227	10	17429	11
36...41	14424	8	12771	9	14424	10	15626	11
50...60	12020	8	9616	10	12020	10	12020	11
85...100	9616	9	8715	10	9616	11	9616	12
135...150	7963	9	7813	10	7813	11	8414	12
200...300	6386	9	6311	10	6010	11	6811	12
450...	4808	10	4808	11	4808	12	4808	13

8.3.2.14 Phase Shift PWM (PSPWM) Scheme

Phase shift PWM scheme allows delaying the time when each LED output is active. When the LED output are not activated simultaneously, the peak load current from the boost output is greatly decreased. This reduces the ripple seen on the boost output and allows smaller output capacitors. Reduced ripple also reduces the output ceramic capacitor audible ringing. PSPWM scheme also increases the load frequency seen on boost output by x6 and therefore transfers the possible audible noise to so high frequency that human ear cannot hear it.

Description of the PSPWM mode is seen in Figure 14. PSPWM mode is enabled by setting <EN_PSPWM> EEPROM bit to 1. Shift time is the delay between outputs and it is defined as 1 / (f_{PWM} x 6). If the <EN_PSPWM> bit is 0, then the delay is 0 and all outputs are active simultaneously.

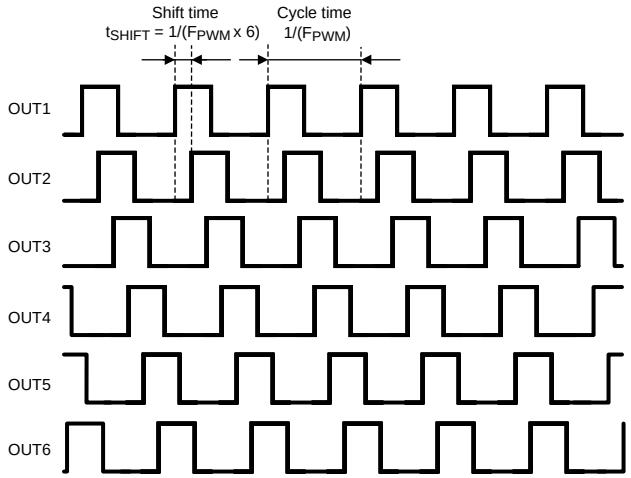

Figure 14. Phase Shift PWM Mode

Copyright © 2010–2014, Texas Instruments Incorporated

8.3.2.15 Slope and Dithering

During transition between two brightness (PWM) values special dithering scheme is used if the slope is enabled. It allows increased resolution and smaller average steps size. Dithering is not used in steady state condition. Slope time can be programmed with EEPROM bits <SLOPE[3:0]> from 0 to 500 ms. Same slope time is used for sloping up and down. Advanced slope makes brightness changes smooth for eye. Dithering can be programmed with EEPROM bits <DITHER[1:0]> from 0 to 3 bits. Figure 16 below is for 1-bit dithering; for 3-bit dithering, every 8th pulse is made 1 LSB longer to increase the average value by 1/8 of LSB.

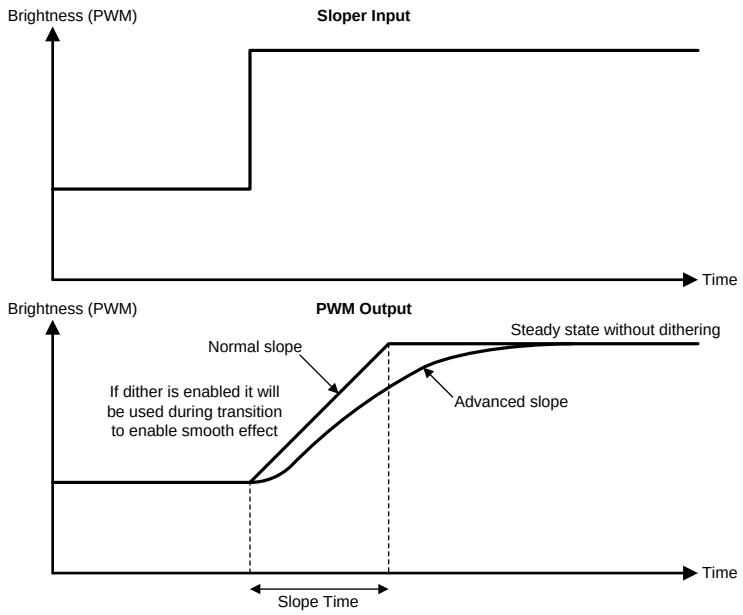

Figure 15. Sloper Operation

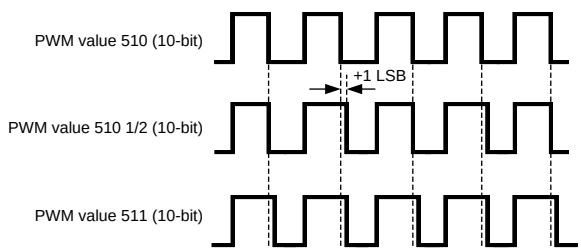

Figure 16. Example Of The Dithering, 1-Bit Dither, 10-Bit Resolution

8.3.2.16 Driver Headroom Control

Driver headroom can be controlled with <DRV_HEADR[2:0]> EEPROM bits. Driver headroom control sets the minimum threshold for the voltage over the LED output which has the smallest driver headroom and controls the boost output voltage accordingly. Boost output voltage step size is 125 mV. The LED output which has the smallest forward voltage is the one which has highest V_F across the LEDs. The strings with highest forward voltage is detected automatically. To achieve best possible efficiency smallest possible headroom voltage should be selected. If there is high variation between LED strings, the headroom can be raised slightly to prevent any visual artifacts.

8.3.3 Boost Converter

8.3.3.1 Operation

The LP8550 boost DC/DC converter generates a 10-V to 40-V supply voltage for the LEDs from 2.7-V to 22-V input voltage. The output voltage can be controlled either with EEPROM register bits <VBOOST[4:0]> or automatic adaptive voltage control can be used. The converter is a magnetic switching PWM mode DC/DC converter with a current limit. The topology of the magnetic boost converter is called CPM (current programmed mode) control, where the inductor current is measured and controlled with the feedback. Switching frequency is selectable between 156 kHz and 1.25 MHz with EEPROM bit <BOOST_FREQ[1:0]>. When <EN_BOOST> EEPROM register bit is set to 1, then boost activates automatically when backlight is enabled.

In adaptive mode the boost output voltage is adjusted automatically based on LED driver headroom voltage. Boost output voltage control step size is in this case 125 mV to ensure as small as possible driver headroom and high efficiency. Enabling the adaptive mode is done with <EN_ADAPT> EEPROM bit. If boost is started with adaptive mode enabled, then the initial boost output voltage value is defined with the <VBOOST[4:0]> EEPROM register bits in order to eliminate long output voltage iteration time when boost is started for the first time. Figure 17 shows the boost topology with the protection circuitry:

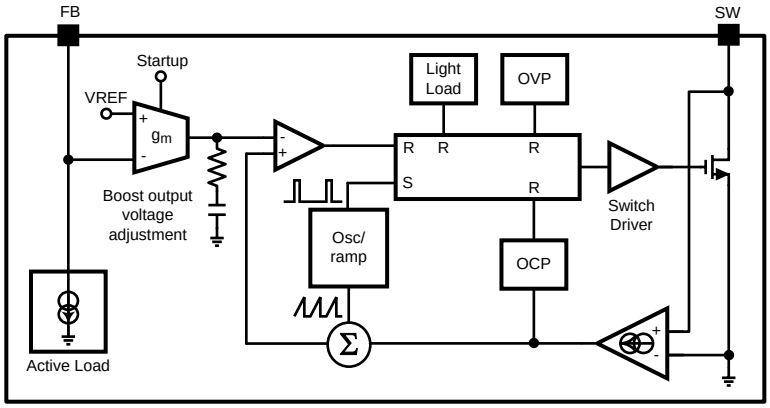

Figure 17. Boost Topology with Protection Circuitry

8.3.3.2 Protection

Three different protection schemes are implemented:

1. Overvoltage protection, limits the maximum output voltage.
   – Overvoltage protection limit changes dynamically based on output voltage setting.
   – Keeps the output below breakdown voltage.
   – Prevents boost operation if battery voltage is much higher than desired output.
2. Overcurrent protection, limits the maximum inductor current.
3. Duty cycle limiting.

8.3.3.3 Manual Output Voltage Control

User can control the boost output voltage with <VBOOST[4:0]> EEPROM register bits when adaptive mode is disabled.

VBOOST[4:0]		VOLTAGE (typical)
Bin	Dec	Volts
00000	0	10
00001	1	11
00010	2	12
00011	3	13
00100	4	14

Copyright © 2010–2014, Texas Instruments Incorporated

VBOOST[4:0]		VOLTAGE (typical)
...	...	...
11101	29	39
11110	30	40
11111	31	40

8.3.3.4 Adaptive Boost Control

Adaptive boost control function adjusts the boost output voltage to the minimum sufficient voltage for proper LED driver operation. The output with highest V_F LED string is detected and boost output voltage adjusted accordingly. Driver headroom can be adjusted with <DRIVER_HEADR[2:0]> EEPROM bits from approximately 300 mV to 1200 mV. Boost adaptive control voltage step size is 125 mV. Boost adaptive control operates similarly with and without PSPWM.

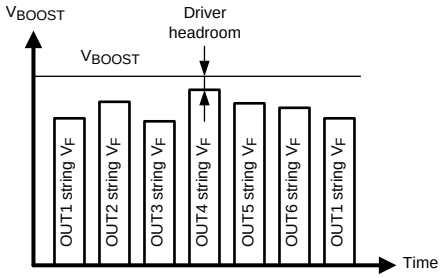

Figure 18. Boost Adaptive Control Principle With PSPWM

8.3.4 Fault Detection

The LP8550 has fault detection for LED fault, low-battery voltage, overcurrent and thermal shutdown. The open drain output pin (FAULT) can be used to indicate occurred fault. The cause for the fault can be read from status register. Reading the fault register also resets the fault. Setting the EN pin low also resets the faults, even if an external 5-V line is used to power V_{LDO} pin.

8.3.4.1 LED Fault Detection

With LED fault detection, the voltages across the LED drivers are constantly monitored. Shorted or open LED string is detected.

If LED fault is detected:

- The corresponding LED string is taken out of boost adaptive control loop;
- Fault bits are set in the fault register to identify whether the fault has been open/short and how many strings are faulty; and
- Fault open-drain pin is pulled down.

LED fault sensitivity can be adjusted with <LED_FAULT_THR> EEPROM bit which sets the allowable variation between LED output voltage to 3.3 V or 5.3 V. Depending on application and how much variation there can be in normal operation between LED string forward voltages this setting can be adjusted.

Fault is cleared by setting EN pin low or by reading the fault register.

By default the LED fault detection is active only in automatic PWM & Current Dimming Mode. If LED fault detection is needed in PWM dimming mode, please contact a TI representative for guidance.

Copyright © 2010–2014, Texas Instruments Incorporated

8.3.4.2 Undervoltage Detection

The LP8550 has detection for too-low V_{IN} voltage. Threshold level for the voltage is set with EEPROM register bits as seen in Table 3:

Table 3. Threshold Level for Voltage Set with EEPROM Register Bits

UVLO[1:0]	THRESHOLD (V)
00	OFF
01	2.7
10	5.4
11	8.1

When undervoltage is detected the LED outputs and boost shut down, FAULT pin is pulled down, and corresponding fault bit is set in fault register. LEDs and boost start again when the voltage has increased above the threshold level. Hysteresis is implemented to threshold level to avoid continuous triggering of fault when threshold is reached.

Fault is cleared by setting EN pin low or by reading the fault register.

8.3.4.3 Overcurrent Protection

The LP8550 has detection for too-high loading on the boost converter. When overcurrent fault is detected, the LP8550 shuts down.

Fault is cleared by setting EN pin low or by reading the fault register.

8.3.4.4 Device Thermal Regulation

The LP8550 has an internal temperature sensor which can be used to measure the junction temperature of the device and protect the device from overheating. During thermal regulation, LED PWM is reduced by 2% of full scale per °C whenever the temperature threshold is reached. Temperature regulation is enabled automatically when chip is enabled. 11-bit temperature value can be read from Temp MSB and Temp LSB registers, MSB should be read first. Temperature limit can be programmed in EEPROM as shown in Table 4.

Thermal regulation function does not generate fault signal.

Table 4. Temperature Limits Programmable in EEPROM

TEMP_LIM[1:0]	OVER-TEMP LIMIT (°C)
00	OFF
01	110
10	120
11	130

8.3.4.5 Thermal Shutdown

If the LP8550 reaches thermal shutdown temperature (150°C) the LED outputs and boost shuts down to protect it from damage. Also the FAULT pin is pulled down to indicate the fault state. The device activates again when temperature drops below 130°C degrees.

Fault is cleared by setting EN pin low or by reading the fault register.

Copyright © 2010–2014, Texas Instruments Incorporated

8.4 Device Functional Modes

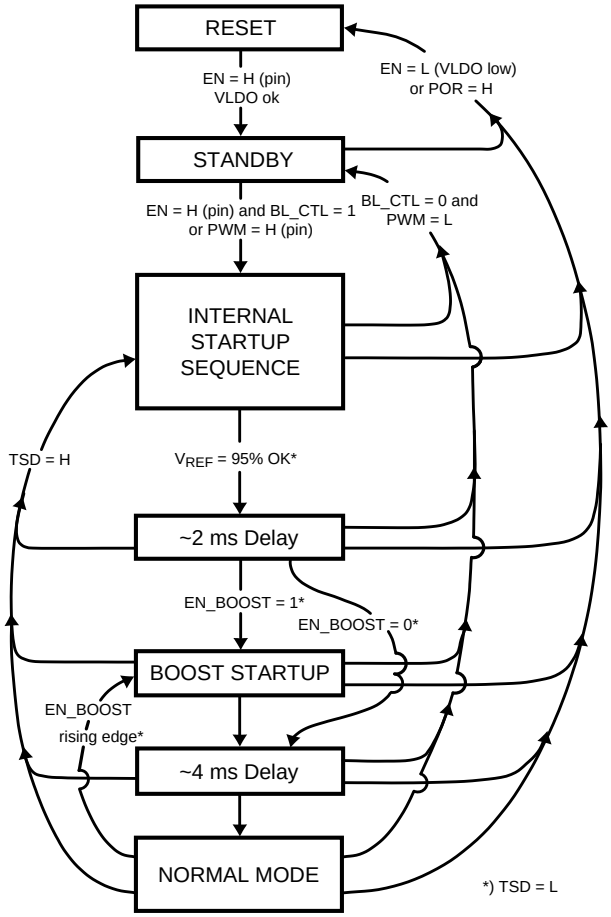

Figure 19. Modes of Operation

RESET: In the RESET mode all the internal registers are reset to the default values. Reset is entered always when VLDO voltage is low. EN pin is enable for the internal LDO. Power On Reset (POR) activates during the chip startup or when the supply voltage VLDO falls below POR level. Once VLDO rises above POR level, POR will inactivate, and the chip will continue to the STANDBY mode.

STANDBY: The STANDBY mode is entered if the register bit BL_CTL is LOW and external PWM input is not active and POR is not active. This is the low power consumption mode, when only internal 5V LDO is enabled. Registers can be written in this mode, and the control bits are effective immediately after start-up.

START-UP: When BL_CTL bit is written high or PWM signal is high, the INTERNAL START-UP SEQUENCE powers up all the needed internal blocks (VREF, Bias, Oscillator etc.). Internal EPROM and EEPROM are read in this mode. To ensure the correct oscillator initialization, etc., a 2-ms delay is generated by the internal state-machine. If the chip temperature rises too high, the Thermal Shutdown (TSD) disables the chip operation and STARTUP mode is entered until no thermal shutdown event is present.

BOOST START-UP: Soft start for boost output is generated in the BOOST START-UP mode. The boost output is raised in low current PWM mode during the 4 ms delay generated by the state-machine. All LED outputs are off during the 4-ms delay to ensure smooth start-up. The Boost start-up is entered from Internal Start-up Sequence if EN_BOOST is HIGH.

NORMAL: During NORMAL mode the user controls the chip using the external PWM input or with Control Registers through I^2C. The registers can be written in any sequence and any number of bits can be altered in a register in one write.

8.5 Programming

8.5.1 I²C-Compatible Serial Bus Interface

8.5.1.1 Interface Bus Overview

The I²C-compatible synchronous serial interface provides access to the programmable functions and registers on the device. This protocol uses a two-wire interface for bidirectional communications between the ICs connected to the bus. The two interface lines are the Serial Data Line (SDA) and the Serial Clock Line (SCLK). These lines should be connected to a positive supply, via a pull-up resistor and remain HIGH even when the bus is idle.

Every device on the bus is assigned a unique address and acts as either a Master or a Slave depending on whether it generates or receives the SCLK. The LP8550 is always a slave device.

8.5.1.2 Data Transactions

One data bit is transferred during each clock pulse. Data is sampled during the high state of the serial clock SCLK. Consequently, throughout the clock's high period, the data should remain stable. Any changes on the SDA line during the high state of the SCLK and in the middle of a transaction, aborts the current transaction. New data should be sent during the low SCLK state. This protocol permits a single data line to transfer both command/control information and data using the synchronous serial clock.

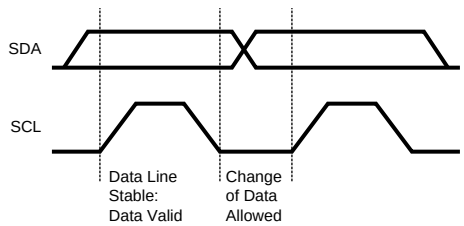

Figure 20. Bit Transfer

Each data transaction is composed of a Start Condition, a number of byte transfers (set by the software) and a Stop Condition to terminate the transaction. Every byte written to the SDA bus must be 8 bits long and is transferred with the most significant bit first. After each byte, an Acknowledge signal must follow as described in below sections.

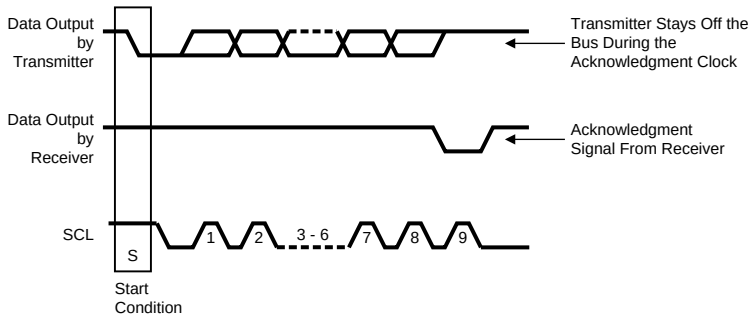

Figure 21. Start and Stop

The Master device on the bus always generates the Start and Stop Conditions (control codes). After a Start Condition is generated, the bus is considered busy and it retains this status until a certain time after a Stop Condition is generated. A high-to-low transition of the data line (SDA) while the clock (SCLK) is high indicates a Start Condition. A low-to-high transition of the SDA line while the SCLK is high indicates a Stop Condition.

Copyright © 2010–2014, Texas Instruments Incorporated

Programming (continued)

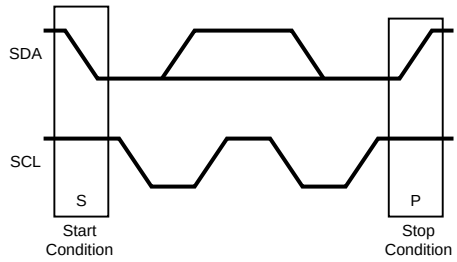

Figure 22. Start and Stop Conditions

In addition to the first Start Condition, a repeated Start Condition can be generated in the middle of a transaction. This allows another device to be accessed, or a register read cycle.

8.5.1.3 Acknowledge Cycle

The Acknowledge Cycle consists of two signals: the acknowledge clock pulse the master sends with each byte transferred, and the acknowledge signal sent by the receiving device.

The master generates the acknowledge clock pulse on the ninth clock pulse of the byte transfer. The transmitter releases the SDA line (permits it to go high) to allow the receiver to send the acknowledge signal. The receiver must pull down the SDA line during the acknowledge clock pulse and ensure that SDA remains low during the high period of the clock pulse, thus signaling the correct reception of the last data byte and its readiness to receive the next byte.

8.5.1.4 "Acknowledge After Every Byte" Rule

The master generates an acknowledge clock pulse after each byte transfer. The receiver sends an acknowledge signal after every byte received.

There is one exception to the "acknowledge after every byte" rule. When the master is the receiver, it must indicate to the transmitter an end of data by not-acknowledging ("negative acknowledge") the last byte clocked out of the slave. This "negative acknowledge" still includes the acknowledge clock pulse (generated by the master), but the SDA line is not pulled down.

8.5.1.5 Addressing Transfer Formats

Each device on the bus has a unique slave address. The LP8550 operates as a slave device with 7-bit address combined with data direction bit. Slave address is 2Ch as 7-bit or 58h for write and 59h for read in 8-bit format.

Before any data is transmitted, the master transmits the address of the slave being addressed. The slave device should send an acknowledge signal on the SDA line, once it recognizes its address.

The slave address is the first seven bits after a Start Condition. The direction of the data transfer (R/W) depends on the bit sent after the slave address — the eighth bit.

When the slave address is sent, each device in the system compares this slave address with its own. If there is a match, the device considers itself addressed and sends an acknowledge signal. Depending upon the state of the R/W bit (1:read, 0:write), the device acts as a transmitter or a receiver.

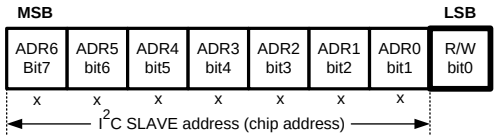

Figure 23. I^2C Chip Address

Programming (continued)

8.5.1.6 Control Register Write Cycle

- Master device generates start condition.
- Master device sends slave address (7 bits) and the data direction bit (r/w = 0).
- Slave device sends acknowledge signal if the slave address is correct.
- Master sends control register address (8 bits).
- Slave sends acknowledge signal.
- Master sends data byte to be written to the addressed register.
- Slave sends acknowledge signal.
- If master will send further data bytes the control register address will be incremented by one after acknowledge signal.
- Write cycle ends when the master creates stop condition.

8.5.1.7 Control Register Read Cycle

- Master device generates a start condition.
- Master device sends slave address (7 bits) and the data direction bit (r/w = 0).
- Slave device sends acknowledge signal if the slave address is correct.
- Master sends control register address (8 bits).
- Slave sends acknowledge signal.
- Master device generates repeated start condition.
- Master sends the slave address (7 bits) and the data direction bit (r/w = 1).
- Slave sends acknowledge signal if the slave address is correct.
- Slave sends data byte from addressed register.
- If the master device sends acknowledge signal, the control register address will be incremented by one. Slave device sends data byte from addressed register.
- Read cycle ends when the master does not generate acknowledge signal after data byte and generates stop condition.

Table 5. Data Read and Write Cycles

	ADDRESS MODE
Data Read	<Start Condition> <Slave Address><r/w = 0>[Ack] <Register Addr.>[Ack] <Repeated Start Condition> <Slave Address><r/w = 1>[Ack] [Register Data]<Ack or NAck> … additional reads from subsequent register address possible <Stop Condition>
Data Write	<Start Condition> <Slave Address><r/w='0'>[Ack] <Register Addr.>[Ack] <Register Data>[Ack] … additional writes to subsequent register address possible <Stop Condition>

Copyright © 2010–2014, Texas Instruments Incorporated

<>Data from master [ ] Data from slave

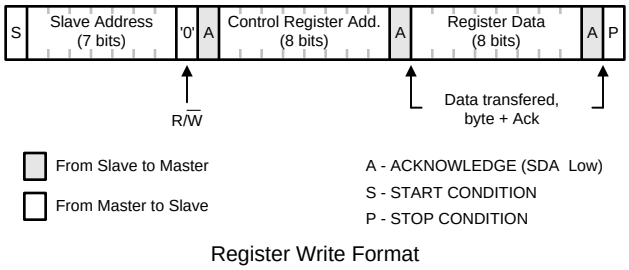

Figure 24. Register Write

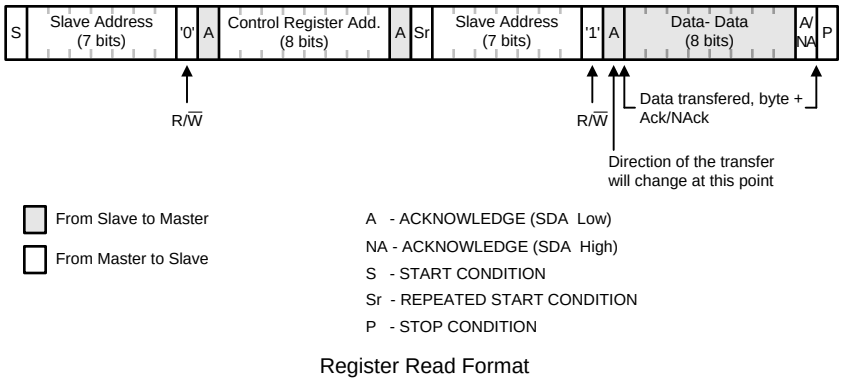

Figure 25. Register Read

8.5.2 EEPROM

EEPROM memory stores various parameters for chip control. The 64-bit EEPROM memory is organized as 8 x 8 bits. The EEPROM structure consists of a register front-end and the non-volatile memory (NVM). Register data can be read and written through the serial interface, and data is effective immediately. To read and program NVM, separate commands need to be sent. Erase and program voltages are generated on-chip charge pump, no other voltages than normal input voltage are required. A complete EEPROM memory map is shown in the *EEPROM Register Map*.

NOTE

EEPROM NVM can be programmed or read by customer for bench validation. Programming for production devices should be done in TI production test, where appropriate checks are performed to confirm EEPROM validity. Writing to EEPROM Control register of production devices (for burning or reading EEPROM) is not recommended. If special EEPROM configuration is required, please contact the TI Sales Office for availability.

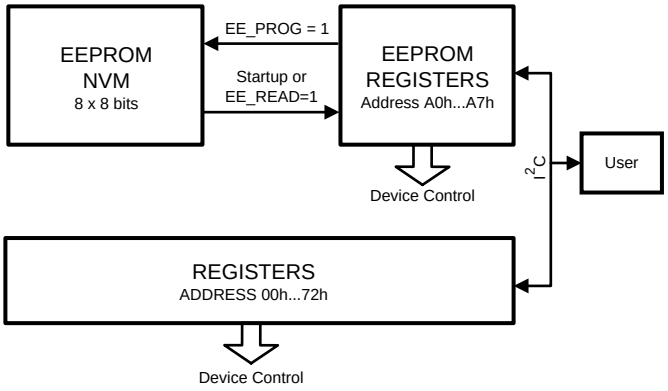

Figure 26. EEPROM Control Structure

8.6 Register Maps

Table 6. Register Map

ADDR	REGISTER	D7	D6	D5	D4	D3	D2	D1	D0	DEFAULT
00H	Brightness Control	BRT[7:0]								0000 0000
01H	Device Control						BRT_MODE[1:0]		BL_CTL	0000 0000
02H	Fault	OPEN	SHORT	2_CHANNELS	1_CHANNEL	BL_FAULT	OCP	TSD	UVLO	0000 0000
03H	ID	PANEL	MFG[3:0]				REV[2:0]			1111 1100
04H	Direct Control			OUT[6:1]						0000 0000
05H	Temp MSB	TEMP[10:3]								0000 0000
06H	Temp LSB	TEMP[2:0]								0000 0000
72H	EEPROM_control	EE_READY					EE_INIT	EE_PROG	EE_READ	0000 0000

8.6.1 Register Bit Explanations

8.6.1.1 Brightness Control

Address 00h

Reset value 0000 0000b

BRIGHTNESS CONTROL REGISTER							
7	6	5	4	3	2	1	0
BRT[7:0]							
Name	**Bit**	**Access**	**Description**				
BRT	7:0	R/W	Backlight PWM 8-bit linear control.				

8.6.1.2 Device Control

Address 01h

Reset value 0000 0000b

DEVICE CONTROL REGISTER							
7	6	5	4	3	2	1	0
					BRT_MODE[1:0]		BL_CTL
Name	**Bit**	**Access**	**Description**				

Copyright © 2010–2014, Texas Instruments Incorporated

DEVICE CONTROL REGISTER			
BRT_MODE	2:1	R/W	PWM source mode
			00b = PWM input pin duty cycle control (default)
			01b = PWM input pin duty cycle control
			10b = Brightness register
			11b = Direct PWM control from PWM input pin
BL_CTL	0	R/W	Enable backlight
			0 = Backlight disabled and chip turned off if BRT_MODE[1:0] = 10. In external PWM pin control the state of the chip is defined with the PWM pin and this bit has no effect.
			1 = Backlight enabled and chip turned on if BRT_MODE[1:0] = 10. In external PWM pin control the state of the chip is defined with the PWM pin and this bit has no effect.

8.6.1.3 Fault

Address 02h

Reset value 0000 0000b

FAULT REGISTER							
7	6	5	4	3	2	1	0
OPEN	SHORT	2_CHANNELS	1_CHANNEL	BL_FAULT	OCP	TSD	UVLO

Name	Bit	Access	Description
OPEN	7	R	LED open fault detection
			0 = No fault
			1 = LED open fault detected. Fault pin is pulled to GND. Fault is cleared by reading the register 02h or setting EN pin low.
SHORT	6	R	LED short fault detection
			0 = No fault
			1 = LED short fault detected. Fault pin is pulled to GND. Fault is cleared by reading the register 02h or setting EN pin low.
2_CHANNELS	5	R	LED fault detection
			0 = No fault
			1 = 2 or more channels have generated either short or open fault. Fault pin is pulled to GND. Fault is cleared by reading the register 02h or setting EN pin low.
1_CHANNEL	4	R	LED fault detection
			0 = No fault
			1 = 1 channel has generated either short or open fault. Fault pin is pulled to GND. Fault is cleared by reading the register 02h or setting EN pin low.
BL_FAULT	3	R	LED fault detection
			0 = No fault
			1 = LED fault detected. Generated with OR function of all LED faults. Fault pin is pulled to GND. Fault is cleared by reading the register 02h or setting EN pin low.
OCP	2	R	Overcurrent protection
			0 = No fault
			1 = Overcurrent detected in boost output. OCP detection block monitors the boost output and if the boost output has been too low for more than 50 ms it generates an OCP fault and disable the boost. Fault pin is pulled to GND. Fault is cleared by reading the register 02h or setting EN pin low. After clearing the fault boost starts up again.
TSD	1	R	Thermal shutdown
			0 = No fault
			1 = Thermal fault generated, 150°C reached. Boost converted and LED outputs are disabled until the temperature has dropped down to 130°C. Fault pin is pulled to GND. Fault is cleared by reading the register 02h or setting EN pin low.

Copyright © 2010–2014, Texas Instruments Incorporated

FAULT REGISTER			
UVLO	0	R	Undervoltage detection
			0 = No fault
			1 = Undervoltage detected in VIN pin. Boost converted and LED outputs are disabled until V_{IN} voltage is above the threshold voltage. Threshold voltage is set with EEPROM bits from 3 V to 9 V. Fault pin is pulled to GND. Fault is cleared by reading the register 02h or setting EN pin low.

8.6.1.4 Identification

Address 03h

Reset value 1111 1100b

IDENTIFICATION REGISTER							
7	6	5	4	3	2	1	0
PANEL	MFG[3:0]				REV[2:0]		
Name	**Bit**	**Access**	**Description**				
PANEL	7	R	Panel ID code				
MFG	6:3	R	Manufacturer ID code				
REV	2:0	R	Revision ID code				

Copyright © 2010–2014, Texas Instruments Incorporated

8.6.1.5 Direct Control

Address 04h

Reset value 0000 0000b

DIRECT CONTROL REGISTER							
7	6	5	4	3	2	1	0
		OUT[6:1]					
Name	**Bit**	**Access**	**Description**				
OUT	5:0	R/W	Direct control of the LED outputs				
			0 = Normal operation. LED output are controlled with PWM.				
			1 = LED output is forced to 100% PWM.				

8.6.1.6 Temp MSB

Address 05h

Reset value 0000 0000b

TEMP MSB REGISTER							
7	6	5	4	3	2	1	0
TEMP[10:3]							
Name	**Bit**	**Access**	**Description**				
TEMP	7:0	R	Device internal temperature sensor reading first 8 MSB. MSB must be read before LSB, because reading of MSB register latches the data.				

8.6.1.7 Temp LSB

Address 06h

Reset value 0000 0000b

TEMP LSB REGISTER							
7	6	5	4	3	2	1	0
TEMP[2:0]							
Name	**Bit**	**Access**	**Description**				
TEMP	7:5	R	Device internal temperature sensor reading last 3 LSB. MSB must be read before LSB, because reading of MSB register latches the data.				

8.6.1.8 EEPROM Control

Address 72h

Reset value 0000 0000b

EEPROM CONTROL REGISTER							
7	6	5	4	3	2	1	0
EE_READY					EE_INIT	EE_PROG	EE_READ
Name	**Bit**	**Access**	**Description**				
EE_READY	7	R	EEPROM ready				
			0 = EEPROM programming or read in progress				
			1 = EEPROM ready, not busy				
EE_INIT	2	R/W	EEPROM initialization bit. This bit must be written 1 before EEPROM read or programming.				

EEPROM CONTROL REGISTER			
EE_PROG	1	R/W	EEPROM programming.
			0 = Normal operation
			1 = Start the EEPROM programming sequence. EE_INIT must be written 1 before EEPROM programming can be started. Programs data currently in the EEPROM registers to non volatile memory (NVM). Programming sequence takes about 200 ms. Programming voltage is generated inside the chip.
EE_READ	0	R/W	EEPROM read
			0 = Normal operation
			1 = Reads the data from NVM to the EEPROM registers. Can be used to restore default values if EEPROM registers are changed during testing.

Programming sequence (program data permanently from registers to NVM):

1. Turn on the chip by writing BL_CTL bit to 1 and BRT_MODE[1:0] to 10b (05h to address 01h)
2. Write data to EEPROM registers (address A0h…A7h).
3. Write EE_INIT to 1 in address 72h. (04h to address 72h).
4. Write EE_PROG to 1 and EE_INIT to 0 in address 72h. (02h to address 72h).
5. Wait 200 ms.
6. Write EE_PROG to 0 in address 72h. (00h to address 72h).

Read sequence (load data from NVM to registers):

1. Turn on the chip by writing BL_CTL bit to 1 and BRT_MODE[1:0] to 10b (05h to address 01h).
2. Write EE_INIT to 1 in address 72h. (04h to address 72h).
3. Write EE_READ to 1 and EE_INIT to 0 in address 72h. (01h to address 72h).
4. Wait 200 ms.
5. Write EE_READ to 0 in address 72h. (00h to address 72h).

Data written to EEPROM registers is effective immediately even if the EEPROM programming sequence has not been done. When power is turned off, the device, however, loses the data if it is not programmed to the NVM. During startup device automatically loads the data from NVM to registers.

NOTE

EEPROM NVM can be programmed or read by customer for bench validation. Programming for production devices should be done in TI production test, where appropriate checks are performed to confirm EEPROM validity. Writing to EEPROM Control register of production devices (for burning or reading EEPROM) is not recommended. If special EEPROM configuration is required, please contact the TI Sales Office for availability.

8.6.2 EEPROM Bit Explanations

8.6.2.1 EEPROM Register Map

ADDR	REGISTER	D7	D6	D5	D4	D3	D2	D1	D0
A0H	eeprom addr 0	CURRENT[7:0]							
A1H	eeprom addr 1	BOOST_FREQ[1:0]		EN_PWM_&_I_CTRL	TEMP_LIM[1:0]		SLOPE[2:0]		
A2H	eeprom addr 2	ADAPTIVE_SPEED[1:0]		ADV_SLOPE	MODE_25/50%_SEL	EN_ADAPT	EN_BOOST	BOOST_IMAX	I_SLOPE[1]
A3H	eeprom addr 3	UVLO[1:0]		EN_PSPWM	PWM_FREQ[4:0]				
A4H	eeprom addr 4	PWM_RESOLUTION[1:0]		EN_I_RES	LED_FAULT_THR	I_SLOPE[0]	DRV_HEADR[2:0]		
A5H	eeprom addr 5	EN_VSYNC	DITHER[1:0]		VBOOST[4:0]				
A6H	eeprom addr 6	PLL[12:5]							
A7H	eeprom addr 7	PLL[4:0]					EN_F_RES	HYSTERESIS[1:0]	

Copyright © 2010–2014, Texas Instruments Incorporated

8.6.2.2 EEPROM Address 0

Address A0h

EEPROM ADDRESS 0 REGISTER							
7	6	5	4	3	2	1	0
CURRENT[7:0]							
Name	**Bit**	**Access**	**Description**				
CURRENT	7:0	R/W	Backlight current adjustment. If EN_I_RES = 0 the maximum backlight current is defined only with these bits as described below. If EN_I_RES = 1, then the external resistor connected to ISET pin also scales the LED current. With a 16-kΩ resistor and CURRENT set to 7Fh, the output current is then 23 mA.				
					EN_I_RES = 0	**EN_I_RES = 1**	
			0000 0000		0 mA	0 mA	
			0000 0001		0.12 mA	(1/255) x 600 x 1.23V/R_{ISET}	
			0000 0010		0.24 mA	(2/255) x 600 x 1.23V/R_{ISET}	
			...		...	...	
			0111 1111		15.00 mA	(127/255) x 600 x 1.23V/R_{ISET}	
			...		...	...	
			1111 1101		29.76 mA	(253/255) x 600 x 1.23V/R_{ISET}	
			1111 1110		29.88 mA	(254/255) x 600 x 1.23V/R_{ISET}	
			1111 1111		30.00 mA	(255/255) x 600 x 1.23V/R_{ISET}	

8.6.2.3 EEPROM Address 1

Address A1h

EEPROM ADDRESS 1 REGISTER							
7	6	5	4	3	2	1	0
BOOST_FREQ[1:0]		EN_PWM_&_I_CTRL	TEMP_LIM[1:0]		SLOPE[2:0]		
Name	**Bit**	**Access**	**Description**				
BOOST_FREQ	7:6	R/W	Boost Converter Switch Frequency				
			00 = 156 kHz				
			01 = 312 kHz				
			10 = 625 kHz				
			11 = 1250 kHz				
EN_PWM_&_I_CTRL	5	R/W	Enable PWM & Current Control				
			0 = PWM control used with constant current				
			1 = Automatic PWM & Current Control enabled				
TEMP_LIM	4:3	R/W	Thermal deration function temperature threshold				
			00 = thermal deration function disabled				
			01 = 110°C				
			10 = 120°C				
			11 = 130°C				
SLOPE	2:0	R/W	Slope time for brightness change				
			000 = Slope function disabled, immediate brightness change				
			001 = 50 ms				
			010 = 75 ms				
			011 = 100 ms				
			100 = 150 ms				
			101 = 200 ms				
			110 = 300 ms				
			111 = 500 ms				

Copyright © 2010–2014, Texas Instruments Incorporated

8.6.2.4 EEPROM Address 2

Address A2h

EEPROM ADDRESS 2 REGISTER							
7	6	5	4	3	2	1	0
ADAPTIVE_SPEED[1:0]		ADV_SLOPE	MODE_25/50_SEL	EN_ADAPT	EN_BOOST	BOOST_IMAX	I_SLOPE[1]

Name	Bit	Access	Description
ADAPTIVE SPEED[1]	7	R/W	Boost converter adaptive control speed adjustment
			0 = Normal mode
			1 = Adaptive mode optimized for light loads. Activating this helps the voltage droop with light loads during boost / backlight start-up.
ADAPTIVE SPEED[0]	6	R/W	Boost converter adaptive control speed adjustment
			0 = Adjust boost once for each phase shift cycle or normal PWM cycle
			1 = Adjust boost every 16th phase shift cycle or normal PWM cycle
ADV_SLOPE	5	R/W	Advanced slope
			0 = Advanced slope is disabled
			1 = Use advanced slope for brightness change to make brightness changes smooth for eye
MODE_25/50_SEL	4	R/W	25% or 50% mode selection for PWM & current control
			0 = 50% mode selected
			1 = 25% mode selected
EN_ADAPT	3	R/W	Enable boost converter adaptive mode
			0 = adaptive mode disabled, boost converter output voltage is set with VBOOST EEPROM register bits
			1 = adaptive mode enabled. Boost converter startup voltage is set with VBOOST EEPROM register bits, and after start-up voltage is reached the boost converter adapts to the highest LED string V_F. LED driver output headroom is set with DRV_HEADR EEPROM control bits.
EN_BOOST	2	R/W	Enable boost converter
			0 = boost is disabled
			1 = boost is enabled and turns on automatically when backlight is enabled
BOOST_IMAX	1	R/W	Boost converter inductor maximum current
			0 = 1.4 A
			1 = 2.5 A (recommended)
I_SLOPE[1]	0	R/W	

8.6.2.5 EEPROM Address 3

Address A3h

EEPROM ADDRESS 3 REGISTER							
7	6	5	4	3	2	1	0
UVLO[1:0]		EN_PSPWM	PWM_FREQ[4:0]				

Name	Bit	Access	Description
UVLO	7:6	R/W	00 = Disabled
			01 = 2.7 V
			10 = 5.4 V
			11 = 8.1 V
EN_PSPWM	5	R/W	Enable phase shift PWM scheme
			0 = PSPWM disabled, normal PWM mode used
			1 = PSPWM enabled

Copyright © 2010–2014, Texas Instruments Incorporated

EEPROM ADDRESS 3 REGISTER			
PWM_FREQ	4:0	R/W	PWM output frequency setting. See *PWM Frequency Setting* for full description of selectable PWM frequencies.

8.6.2.6 EEPROM Address 4

Address A4h

EEPROM ADDRESS 4 REGISTER							
7	6	5	4	3	2	1	0
PWM_RESOLUTION[1:0]		EN_I_RES	LED_FAULT_THR	I_SLOPE[0]	DRV_HEADR[2:0]		
Name	**Bit**	**Access**	**Description**				
PWM RESOLUTION	7:6	R/W	PWM output resolution selection. Actual resolution depends also on the output frequency. See *PWM Frequency Setting* for full description.				
			00 = 8...10 bits (19.2 kHz...4.8 kHz)				
			01 = 9...11 bits (19.2 kHz... 4.8 kHz)				
			10 = 10...12 bits (19.2 kHz...4.8 kHz)				
			11 = 11...13 bits (19.2 kHz...4.8 kHz)				
EN_I_RES	5	R/W	Enable LED current set resistor				
			0 = Resistor is disabled and current is set only with CURRENT EEPROM register bits				
			1 = Enable LED current set resistor. LED current is defined by the R_{ISET} resistor and the CURRENT EEPROM register bits.				
LED_FAULT_THR	4	R/W	LED fault detector thresholds. V_{SAT} is the saturation voltage of the driver, typically 200 mV.				
			0 = 3.3V				
			1 = 5.3V				
I_SLOPE[0]	3	R/W					
DRV_HEADR	2:0	R/W	LED output driver headroom control. V_{SAT} is the saturation voltage of the driver, typically 200 mV.				
			000 = V_{SAT} + 125 mV				
			001 = V_{SAT} + 250 mV				
			010 = V_{SAT} + 375 mV				
			011 = V_{SAT} + 500 mV				
			100 = V_{SAT} + 625 mV				
			101 = V_{SAT} + 750 mV				
			110 = V_{SAT} + 875 mV				
			111 = V_{SAT} + 1000 mV				

Copyright © 2010–2014, Texas Instruments Incorporated

8.6.2.7 EEPROM Address 5

Address A5h

EEPROM ADDRESS 5 REGISTER							
7	6	5	4	3	2	1	0
EN_VSYNC	DITHER[1:0]		VBOOST[4:0]				
Name	**Bit**	**Access**	**Description**				
EN_VSYNC	7	R/W	Enable V_{SYNC} function				
			0 = V_{SYNC} input disabled				
			1 = V_{SYNC} input enabled. V_{SYNC} signal is used by the internal PLL to generate PWM output and boost frequency.				
DITHER	6:5	R/W	Dither function controls				
			00 = Dither function disabled				
			01 = 1-bit dither used for output PWM transitions				
			10 = 2-bit dither used for output PWM transitions				
			11 = 3-bit dither used for output PWM transitions				
VBOOST	4:0	R/W	Boost voltage control from 10 V to 40 V with 1-V step. If adaptive boost control is enabled, this sets the initial start voltage for the boost converter. If adaptive mode is disabled, the output voltage of the boost converter is directly set.				
			0 0000 = 10 V				
			0 0001 = 11 V				
			0 0010 = 12 V				
			...				
			1 1101 = 39 V				
			1 1110 = 40 V				
			1 1111 = 40 V				

8.6.2.8 EEPROM Address 6

Address A6h

EEPROM ADDRESS 6 register							
7	6	5	4	3	2	1	0
PLL[12:5]							
Name	**Bit**	**Access**	**Description**				
PLL	7:0	R/W	13-bit counter value for PLL, 8 MSB bits. PLL[12:0] bits are used when en_vsync = 1. See Table 7 for PLL value calculation.				

8.6.2.9 EEPROM Address 7

Address A7h

EEPROM ADDRESS 7 REGISTER							
7	6	5	4	3	2	1	0
PLL[4:0]					EN_F_RES	HYSTERESIS[1:0]	
Name	**Bit**	**Access**	**Description**				
PLL	7:3	R/W	13-bit counter value for PLL, 5 LSB bits. PLL[12:0] bits are used when en_vsync = 1. See Table 7 for PLL value calculation.				
EN_F_RES	2	R/W	Enable PWM output frequency set resistor				
			0 = Resistor is disabled and PWM output frequency is set with PWM_FREQ EEPROM register bits				
			1 = PWM frequency set resistor is enabled. R_{FSET} defines the output PWM frequency. See *PWM Frequency Setting* for full description of the PWM frequencies.				

Copyright © 2010–2014, Texas Instruments Incorporated

EEPROM ADDRESS 7 REGISTER			
HYSTERESIS	1:0	R/W	PWM input hysteresis function. Defines how small changes in the PWM input are ignored to remove constant switching between two values.
			00 = OFF
			01 = 1-bit hysteresis with 11-bit resolution
			10 = 1-bit hysteresis with 10-bit resolution
			11 = 1-bit hysteresis with 8-bit resolution

Table 7. PLL Value Calculation

en_vsync	PLL FREQUENCY [MHz]	PLL[12:0]
0	5, 10, 20, 40	not used
1	5	5 MHz / (26 x f_{VSYNC})
	10	10 MHz / (50 x f_{VSYNC})
	20	20 MHz / (98 x f_{VSYNC})
	40	40 MHz / (196 x f_{VSYNC})

PLL frequency is set by PWM_RESOLUTION[1:0] bits.

For Example:

If f_{PLL} = 5 MHz and f_{VSYNC} = 60 Hz, then PLL[12:0] = 5000000 Hz / (26 * 60 Hz) = 3205d = C85h.

If f_{PLL} = 10 MHz and f_{VSYNC} = 75 Hz, then PLL[12:0] = 10000000 Hz / (50 * 75 Hz) = 2667d = A6Bh.

9 Application and Implementation

NOTE

Information in the following applications sections is not part of the TI component specification, and TI does not warrant its accuracy or completeness. TI's customers are responsible for determining suitability of components for their purposes. Customers should validate and test their design implementation to confirm system functionality.

9.1 Application Information

The LP8550 is designed for LCD backlighting for portable devices, such as laptops and tablets. 6 LED current sinks allow driving up to 60 LEDs with high efficiency. Boost converter optimizes the system efficiency by adjusting the LED current driver headroom to optimal level in each case. Due to a flexible input voltage configuration, the LP8550 can be used also in various applications since the input voltage supports 1x to 5x series Li-Ion cells. Main limiting factor for output power is inductor current limit, which is calculated in the Detailed Design Procedure. The following design procedure can be used to select component values for the LP8550.

9.2 Typical Applications

9.2.1 Typical Application Using Internal LDO

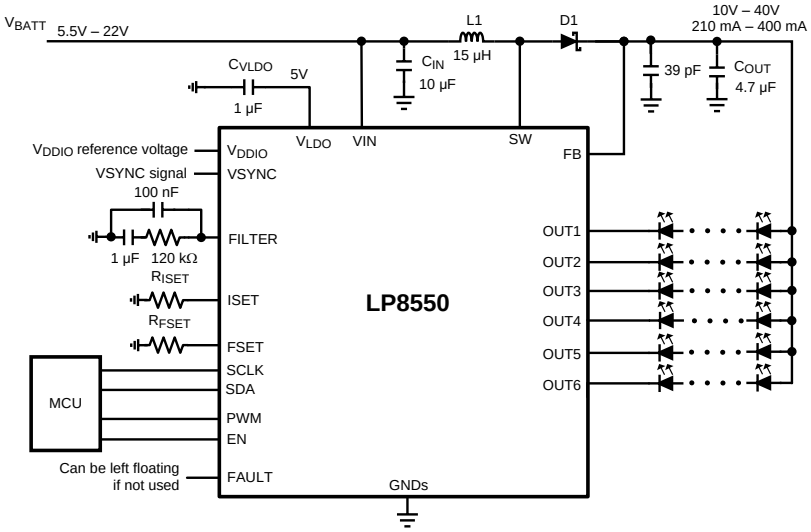

Figure 27. LP8550 with Internal LDO

9.2.1.1 Design Requirements

DESIGN PARAMETER	EXAMPLE VALUE
Input voltage range	5.5...22 V
Brightness Control	PWM input duty cycle (default), I^2C can be used as well
PWM output frequency	With R_{FSET} resistor 85 kΩ to 100 kΩ; 9.8 kHz with PSPWM enabled
LED Current	With R_{ISET} resistor 15 kΩ; 25 mA/channel
Brightness slopes	200-ms linear slope + advanced slope
External set resistors	Enabled
Inductor	10 µH to 33 µH, with 2.5-A saturation current
Boost SW frequency	625 kHz
SW current limit	2.5 A

Copyright © 2010–2014, Texas Instruments Incorporated

9.2.1.2 Detailed Design Procedure

9.2.1.2.1 Inductor Selection

There are two main considerations when choosing an inductor; the inductor should not saturate, and the inductor current ripple should be small enough to achieve the desired output voltage ripple. Different saturation current rating specifications are followed by different manufacturers so attention must be given to details. Saturation current ratings are typically specified at 25°C. However, ratings at the maximum ambient temperature of application should be requested from the manufacturer. Shielded inductors radiate less noise and should be preferred.

The saturation current should be greater than the sum of the maximum load current and the worst case average to peak inductor current.

Equation 3 below shows the worst case conditions.

$$I_{SAT} > \frac{I_{OUTMAX}}{D'} + I_{RIPPLE}$$

$$\text{Where } I_{RIPPLE} = \frac{(V_{OUT} - V_{IN})}{(2 \times L \times f)} \times \frac{V_{IN}}{V_{OUT}}$$

$$\text{Where } D = \frac{(V_{OUT} - V_{IN})}{(V_{OUT})} \text{ and } D' = (1 - D)$$

- I_{RIPPLE}: Average to peak inductor current
- I_{OUTMAX}: Maximum load current
- V_{IN}: Maximum input voltage in application
- L: Min inductor value including worst case tolerances
- f: Minimum switching frequency
- D: Duty cycle for CCM Operation
- V_{OUT}: Output voltage (3)

Example using Equation 3:

- V_{IN} = 12 V
- V_{OUT} = 38 V
- I_{OUT} = 400 mA
- L = 15 µH − 20% = 12 µH
- f = 1.25 MHz
- I_{SAT} = 1.6 A

As a result the inductor should be selected according to the I_{SAT}. A more conservative and recommended approach is to choose an inductor that has a saturation current rating greater than the maximum current limit of 2.5 A. A 15-µH inductor with a saturation current rating of 2.5 A is recommended for most applications. The inductor's resistance should be less than 300 mΩ for good efficiency. For high efficiency choose an inductor with high frequency core material such as ferrite to reduce core losses. To minimize radiated noise, use shielded core inductor. Inductor should be placed as close to the SW pin and the IC as possible. Special care should be used when designing the PCB layout to minimize radiated noise and to get good performance from the boost converter.

9.2.1.2.2 Output Capacitor

A ceramic capacitor with 50-V voltage rating or higher is recommended for the output capacitor. The DC-bias effect can reduce the effective capacitance by up to 80%, which needs to be considered in capacitance value selection. For light loads a 4.7-µF capacitor is sufficient. Effectively the capacitance should be 4 µF for < 150 mA loads. For maximum output voltage/current 10-µF capacitor (or two 4.7-µF capacitors) is recommended to minimize the output ripple.

9.2.1.2.3 LDO Capacitor

A 1µF ceramic capacitor with 10-V voltage rating is recommended for the LDO capacitor.

9.2.1.2.4 Output Diode

A Schottky diode should be used for the output diode. Peak repetitive current should be greater than inductor peak current (2.5 A) to ensure reliable operation. Average current rating should be greater than the maximum output current. Schottky diodes with a low forward drop and fast switching speeds are ideal for increasing efficiency in portable applications. Choose a reverse breakdown voltage of the Schottky diode significantly larger (approximately 60 V) than the output voltage. Do not use ordinary rectifier diodes, since slow switching speeds and long recovery times cause the efficiency and the load regulation to suffer.

9.2.1.2.5 Resistors for Setting the LED Current and PWM Frequency

See *EEPROM Bit Explanations* on how to select values for these resistors.

9.2.1.2.6 Filter Component Values

Optimal components for 60-Hz V_{SYNC} frequency and 4-Hz cut-off frequency of the low-pass filter are shown in Figure 27, Figure 28, and Figure 31. If a 2-Hz cut-off frequency, that is, slower response time is desired, filter components are: C_1 = 1 µF, C_2 = 10 µF and R = 47 kΩ. If different V_{SYNC} frequency or response time is desired, please contact a TI representative for guidance.

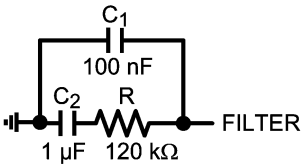

Figure 28. Filter Components

9.2.1.3 Application Curves

Typical Boost and LED Current Waveforms with f_{LED} = 9.6 kHz.

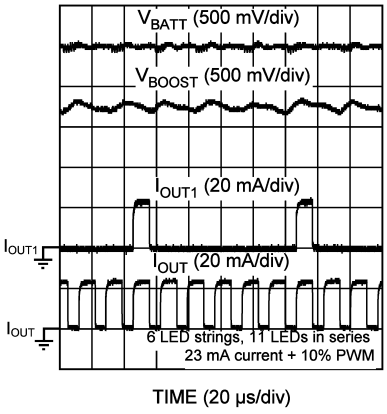

f_{LED} = 9.6 kHz

Figure 29. Typical Waveforms

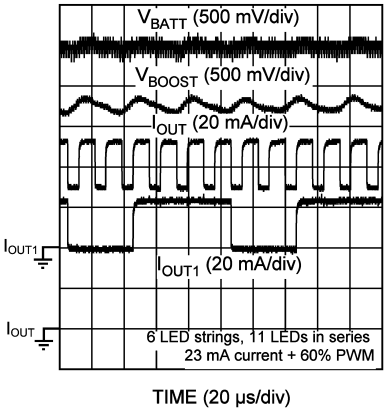

f_{LED} = 9.6 kHz

Figure 30. Typical Waveforms

9.2.2 Typical Application for Low Input Voltage

In Single Li-Ion cell powered application the internal circuitry of LP8550 can be powered from external 5-V rail. Boost is powered directly from Li-Ion battery and V_{LDO} and V_{IN} pins are connected to external 5-V rail. Current draw from the 5-V rail is maximum 10 mA. A separate 5-V rail to V_{IN}/V_{LDO} can be used also in higher input voltage application to improve efficiency or add increase input voltage range above 22 V in some cases. There are no power sequencing requirement for V_{IN}/V_{LDO} and V_{BATT} other than V_{BATT} must be available when enabling backlight to prevent a false overcurrent fault.

Copyright © 2010–2014, Texas Instruments Incorporated

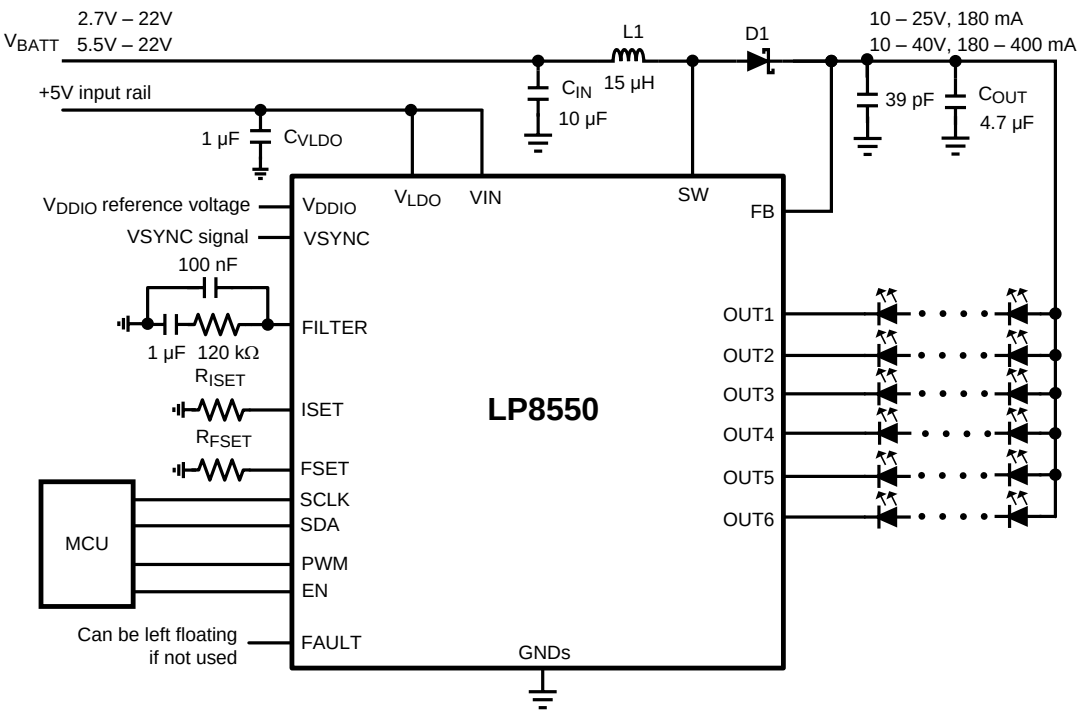

Figure 31. Typical Application for Low-Input Voltage

9.2.2.1 Design Requirements

DESIGN PARAMETER	EXAMPLE VALUE
Input voltage range, V_{BATT}	2.7 V to V_{OUT}
5-V input rail, V_{LDO}/V_{IN}	4.5 V to 5.5 V, 10 mA
Brightness Control	PWM input duty cycle (default), I^2C can be used as well
PWM output frequency	With R_{FSET} resistor 85 kΩ to 100 kΩ; 9.8 kHz with PSPWM enabled
LED Current	With R_{ISET} resistor 15 kΩ; 25 mA/channel
Brightness slopes	200-ms linear slope + advanced slope
External set resistors	Enabled
Inductor	10 µH to 33 µH, with 2.5-A saturation current
Boost SW frequency	625 kHz
SW current limit	2.5 A

9.2.2.2 Detailed Design Procedure

Component selection follows *Design Requirements* above. V_{LDO} capacitor voltage rating can be set based on the 5-V rail voltage specification, which must be < 5.5 V in all cases. Note that UVLO is detected from the V_{IN} pin voltage, not from the V_{BATT} voltage.

9.2.2.3 Application Curves

Typical Boost and LED current behavior is seen in the *Application Curves* section.

10 Power Supply Recommendations

The device is designed to operate from an input voltage supply range between 2.7 V and 22 V. This input supply should be well-regulated and able to withstand maximum input current and maintain stable voltage without voltage drop even at load transition condition (start-up or rapid brightness change). The resistance of the input supply rail should be low enough that the input current transient does not cause drop high enough in the LP8550 supply voltage that can cause false UVLO fault triggering.

If a separate 5-V power rail is used to power LP8550 V_{LDO}/VIN pins, this voltage must be stable 4.5 V to 5 V. Excessive noise or ripple in this rail can have adverse effect on device performance, so good grounding and sufficient bypass capacitors must be used. If the input supply is located more than a few inches from the LP8550 additional bulk capacitance may be required in addition to the ceramic bypass capacitors. Depending on device EEPROM configuration and usage case the boost converter is configured to operate optimally with certain input voltage range. Examples are seen in the *Detailed Design Procedure* section. In uncertain cases, it is recommended to contact a TI Sales Representative for confirmation of the compatibility of the use case, EEPROM configuration, and input voltage range.

11 Layout

11.1 Layout Guidelines

Figure 33 is a layout recommendation for the LP8550. The figure is used for demonstrating the principle of good layout. This layout can be adapted to the actual application layout if/where possible.

It is important that all boost components are close to the chip and the high current traces should be wide enough. By placing the boost component on one side of the chip it is easy to keep the ground plane intact below the high current paths. This way other chip pins can be routed more easily without splitting the ground plane. If the chip is placed in the center of the boost components, the I^2C lines, LED lines, etc. cut the ground plane below the high current paths, and it makes the layout design more difficult.

V_{IN} and V_{LDO} need to be as noise-free as possible. Place the bypass capacitors near the corresponding pins and ground them to as noise-free ground as possible.

Here are some main points to help the PCB layout work:

1. Current loops need to be minimized:
   (a) For low frequency the minimal current loop can be achieved by placing the boost components as close to the SW and SW_GND pins as possible. Input and output capacitor grounds need to be close to each other.
   (b) Minimal current loops for high frequencies can be achieved by making sure that the ground plane is intact under the current traces. High frequency return currents try to find route with minimum impedance, which is the route with minimum loop area, not necessarily the shortest path. Minimum loop area is formed when return current flows just under the “positive” current route in the ground plane, if the ground plane is intact under the route. Traces from inner pads of the LP8550 need to be routed from below the part in the second layer so that traces do not split the ground plane under the boost traces or components.
2. GND plane needs to be intact under the high current boost traces to provide shortest possible return path and smallest possible current loops for high frequencies.
3. Current loops when the boost switch is conducting and not conducting needs to be on the same direction in optimal case.
4. Inductor placement should be so that the current flows in the same direction as in the current loops. Rotating inductor 180 degrees changes current direction.
5. Use separate “noisy” and “silent” grounds. Noisy ground is used for boost converter return current and silent ground for more sensitive signals, like VIN and V_{LDO} bypass capacitor grounding.
6. Boost output voltage to LEDs need to be taken out “after” the output capacitors, not straight from the diode cathode.
7. Small (such as 39 pF) bypass capacitor should be placed close to the FB pin.
8. R_{ISET} resistor should be grounded to silent ground, since possible ground ripple will show at the LED current.
9. V_{IN} line should be separated from the high current supply path to the boost converter to prevent high

Copyright © 2010–2014, Texas Instruments Incorporated

Layout Guidelines (continued)

frequency ripple affecting the chip behavior. Separate 100-nF bypass capacitor is used for VIN line and it is grounded to noise-free ground.

10. Input and output capacitors need strong grounding (wide traces, vias to GND plane).
11. If two output capacitors are used they need symmetrical layout to get both capacitors working ideally.
12. Output capacitors DC-bias effect. If the output capacitance is too low, it can cause boost to become unstable on some loads and this increases EMI. DC bias characteristics need to be obtained from the component manufacturer; it is not taken into account on component tolerance. 50-V 1210-size X5R/X7R capacitors are recommended.

11.2 Layout Examples

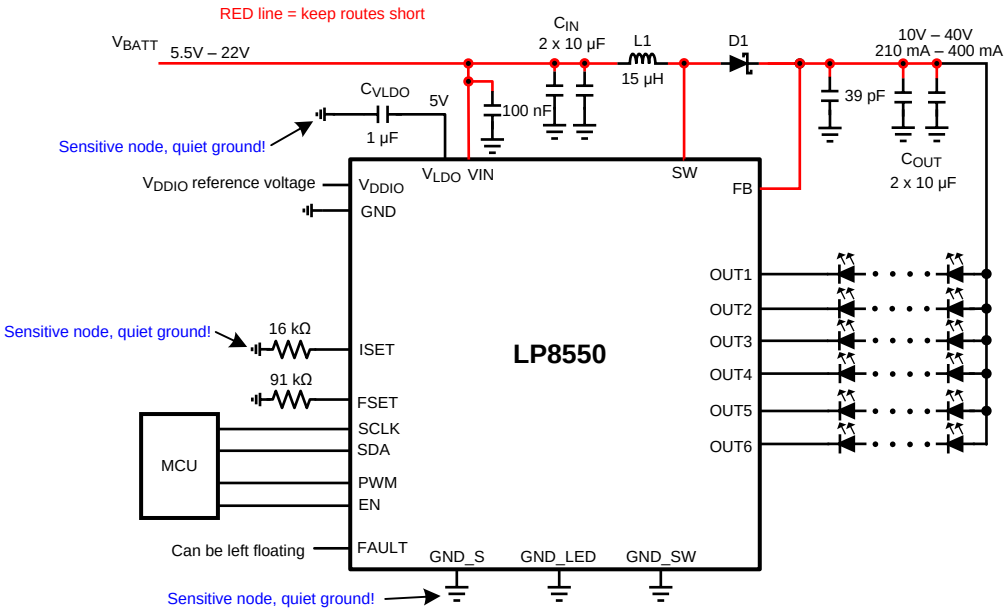

Figure 32. LP8550 Application Schematic for Layout

Layout Examples (continued)

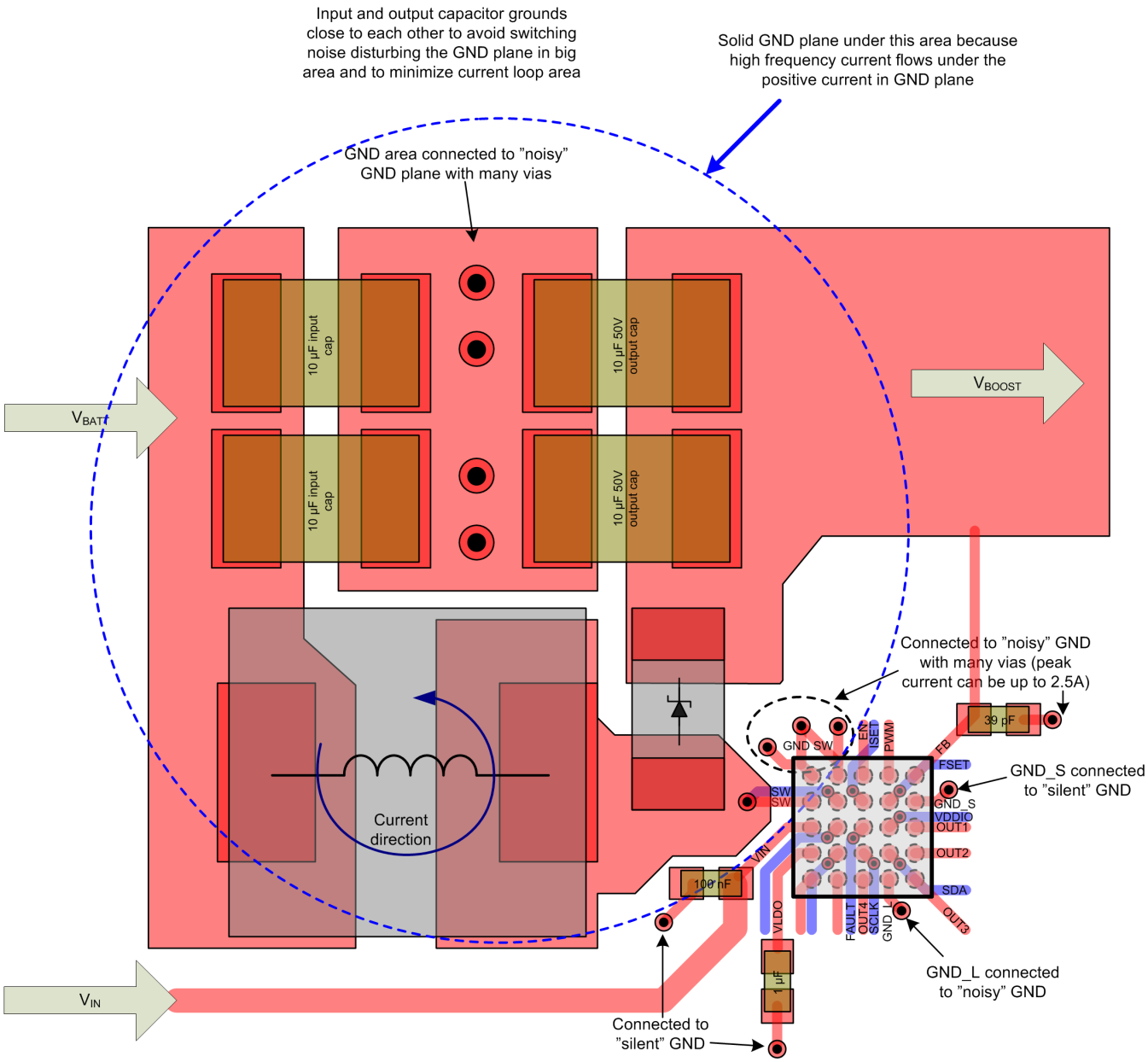

Figure 33. LP8550 Layout

Copyright © 2010–2014, Texas Instruments Incorporated

12 Device and Documentation Support

12.1 Trademarks

All trademarks are the property of their respective owners.

12.2 Electrostatic Discharge Caution

This integrated circuit can be damaged by ESD. Texas Instruments recommends that all integrated circuits be handled with appropriate precautions. Failure to observe proper handling and installation procedures can cause damage.

ESD damage can range from subtle performance degradation to complete device failure. Precision integrated circuits may be more susceptible to damage because very small parametric changes could cause the device not to meet its published specifications.

12.3 Glossary

SLYZ022 — *TI Glossary*.

This glossary lists and explains terms, acronyms, and definitions.

13 Mechanical, Packaging, and Orderable Information

The following pages include mechanical, packaging, and orderable information. This information is the most current data available for the designated devices. This data is subject to change without notice and revision of this document. For browser-based versions of this data sheet, refer to the left-hand navigation.

PACKAGING INFORMATION

Orderable part number	Status (1)	Material type (2)	Package | Pins	Package qty | Carrier	RoHS (3)	Lead finish/ Ball material (4)	MSL rating/ Peak reflow (5)	Op temp (°C)	Part marking (6)
LP8550TLE/NOPB	Active	Production	DSBGA (YZR) | 25	250 | SMALL T&R	Yes	SNAGCU	Level-1-260C-UNLIM	-30 to 85	8550
LP8550TLE/NOPB.A	Active	Production	DSBGA (YZR) | 25	250 | SMALL T&R	Yes	SNAGCU	Level-1-260C-UNLIM	-30 to 85	8550
LP8550TLX-A/NOPB	Active	Production	DSBGA (YZR) | 25	3000 | LARGE T&R	Yes	SNAGCU	Level-1-260C-UNLIM	-	D71B
LP8550TLX-A/NOPB.A	Active	Production	DSBGA (YZR) | 25	3000 | LARGE T&R	Yes	SNAGCU	Level-1-260C-UNLIM	-30 to 85	D71B
LP8550TLX/NOPB	Active	Production	DSBGA (YZR) | 25	3000 | LARGE T&R	Yes	SNAGCU	Level-1-260C-UNLIM	-30 to 85	8550
LP8550TLX/NOPB.A	Active	Production	DSBGA (YZR) | 25	3000 | LARGE T&R	Yes	SNAGCU	Level-1-260C-UNLIM	-30 to 85	8550

(1) **Status:** For more details on status, see our product life cycle.

(2) **Material type:** When designated, preproduction parts are prototypes/experimental devices, and are not yet approved or released for full production. Testing and final process, including without limitation quality assurance, reliability performance testing, and/or process qualification, may not yet be complete, and this item is subject to further changes or possible discontinuation. If available for ordering, purchases will be subject to an additional waiver at checkout, and are intended for early internal evaluation purposes only. These items are sold without warranties of any kind.

(3) **RoHS values:** Yes, No, RoHS Exempt. See the TI RoHS Statement for additional information and value definition.

(4) **Lead finish/Ball material:** Parts may have multiple material finish options. Finish options are separated by a vertical ruled line. Lead finish/Ball material values may wrap to two lines if the finish value exceeds the maximum column width.

(5) **MSL rating/Peak reflow:** The moisture sensitivity level ratings and peak solder (reflow) temperatures. In the event that a part has multiple moisture sensitivity ratings, only the lowest level per JEDEC standards is shown. Refer to the shipping label for the actual reflow temperature that will be used to mount the part to the printed circuit board.

(6) **Part marking:** There may be an additional marking, which relates to the logo, the lot trace code information, or the environmental category of the part.

Multiple part markings will be inside parentheses. Only one part marking contained in parentheses and separated by a "~" will appear on a part. If a line is indented then it is a continuation of the previous line and the two combined represent the entire part marking for that device.

Important Information and Disclaimer: The information provided on this page represents TI's knowledge and belief as of the date that it is provided. TI bases its knowledge and belief on information provided by third parties, and makes no representation or warranty as to the accuracy of such information. Efforts are underway to better integrate information from third parties. TI has taken and continues to take reasonable steps to provide representative and accurate information but may not have conducted destructive testing or chemical analysis on incoming materials and chemicals. TI and TI suppliers consider certain information to be proprietary, and thus CAS numbers and other limited information may not be available for release.

In no event shall TI's liability arising out of such information exceed the total purchase price of the TI part(s) at issue in this document sold by TI to Customer on an annual basis.

TAPE AND REEL INFORMATION

REEL DIMENSIONS

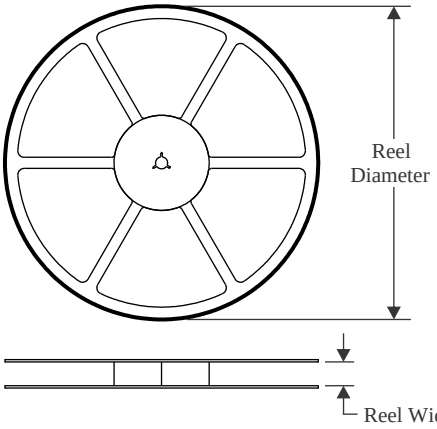

TAPE DIMENSIONS

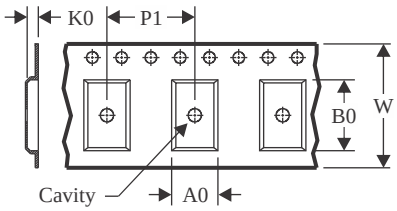

A0	Dimension designed to accommodate the component width
B0	Dimension designed to accommodate the component length
K0	Dimension designed to accommodate the component thickness
W	Overall width of the carrier tape
P1	Pitch between successive cavity centers

QUADRANT ASSIGNMENTS FOR PIN 1 ORIENTATION IN TAPE

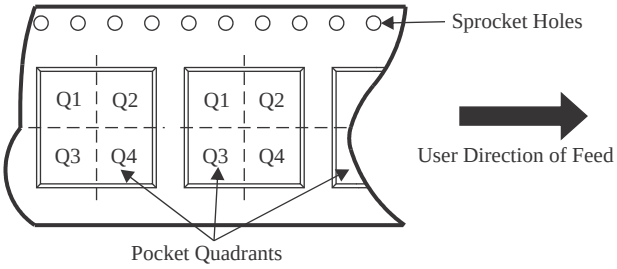

*All dimensions are nominal

Device	Package Type	Package Drawing	Pins	SPQ	Reel Diameter (mm)	Reel Width W1 (mm)	A0 (mm)	B0 (mm)	K0 (mm)	P1 (mm)	W (mm)	Pin1 Quadrant
LP8550TLE/NOPB	DSBGA	YZR	25	250	178.0	8.4	2.69	2.69	0.76	4.0	8.0	Q1
LP8550TLX-A/NOPB	DSBGA	YZR	25	3000	178.0	8.4	2.69	2.69	0.76	4.0	8.0	Q1
LP8550TLX/NOPB	DSBGA	YZR	25	3000	178.0	8.4	2.69	2.69	0.76	4.0	8.0	Q1

TAPE AND REEL BOX DIMENSIONS

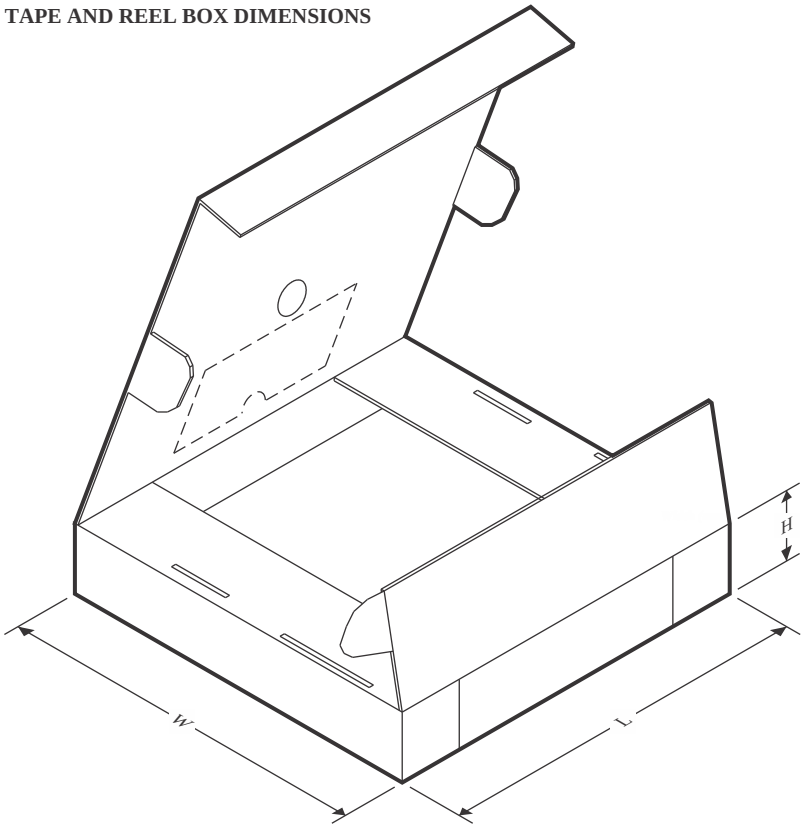

*All dimensions are nominal

Device	Package Type	Package Drawing	Pins	SPQ	Length (mm)	Width (mm)	Height (mm)
LP8550TLE/NOPB	DSBGA	YZR	25	250	208.0	191.0	35.0
LP8550TLX-A/NOPB	DSBGA	YZR	25	3000	208.0	191.0	35.0
LP8550TLX/NOPB	DSBGA	YZR	25	3000	208.0	191.0	35.0

YZR0025

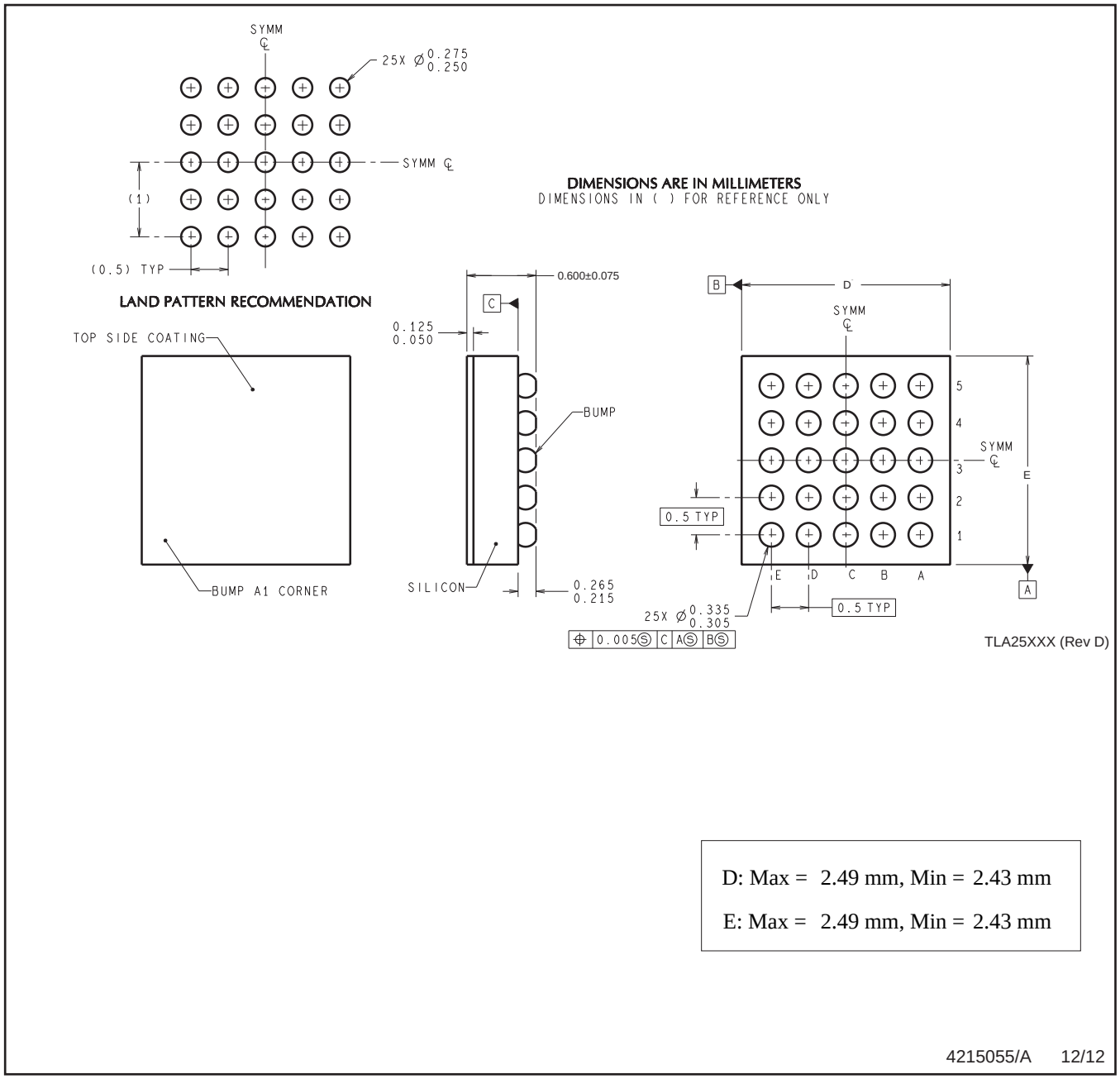

NOTES: A. All linear dimensions are in millimeters. Dimensioning and tolerancing per ASME Y14.5M-1994.
B. This drawing is subject to change without notice.

IMPORTANT NOTICE AND DISCLAIMER

TI PROVIDES TECHNICAL AND RELIABILITY DATA (INCLUDING DATA SHEETS), DESIGN RESOURCES (INCLUDING REFERENCE DESIGNS), APPLICATION OR OTHER DESIGN ADVICE, WEB TOOLS, SAFETY INFORMATION, AND OTHER RESOURCES “AS IS” AND WITH ALL FAULTS, AND DISCLAIMS ALL WARRANTIES, EXPRESS AND IMPLIED, INCLUDING WITHOUT LIMITATION ANY IMPLIED WARRANTIES OF MERCHANTABILITY, FITNESS FOR A PARTICULAR PURPOSE OR NON-INFRINGEMENT OF THIRD PARTY INTELLECTUAL PROPERTY RIGHTS.

These resources are intended for skilled developers designing with TI products. You are solely responsible for (1) selecting the appropriate TI products for your application, (2) designing, validating and testing your application, and (3) ensuring your application meets applicable standards, and any other safety, security, regulatory or other requirements.

These resources are subject to change without notice. TI grants you permission to use these resources only for development of an application that uses the TI products described in the resource. Other reproduction and display of these resources is prohibited. No license is granted to any other TI intellectual property right or to any third party intellectual property right. TI disclaims responsibility for, and you will fully indemnify TI and its representatives against, any claims, damages, costs, losses, and liabilities arising out of your use of these resources.

TI’s products are provided subject to TI’s Terms of Sale or other applicable terms available either on ti.com or provided in conjunction with such TI products. TI’s provision of these resources does not expand or otherwise alter TI’s applicable warranties or warranty disclaimers for TI products.

TI objects to and rejects any additional or different terms you may have proposed.

Mailing Address: Texas Instruments, Post Office Box 655303, Dallas, Texas 75265
Copyright © 2025, Texas Instruments Incorporated