BlueNRG-M2

Datasheet

Very low power application processor module for Bluetooth® low energy v5.2

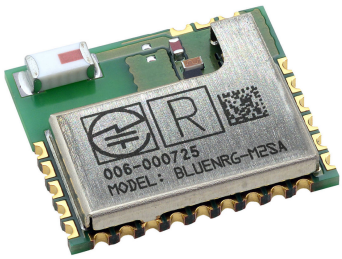

Product status link
BlueNRG-M2

Product label
LONGEVITY 10 YEARS COMMITMENT

Features

- Bluetooth v5.2 certified
  - Supports master and slave modes
  - Multiple roles supported simultaneously
  - LE data packet length extension
- Embedded ST BlueNRG-2 BLE SoC
  - High performance, ultra-low power Cortex-M0 32-bit based core
  - Programmable embedded 256 kB Flash
  - 24 kB embedded RAM with data retention
  - Up to +8 dBm available output power
  - Down to -88 dBm Rx sensitivity
  - Up to 96 dB link budget with excellent link reliability
- Embedded BALF-NRG-02D3 integrated matched balun with harmonic filter
- Interfaces:
  - 1 x UART, 1 x I^2C, 1xSPI, 14 x GPIO, 2 x multifunction timer, 10-bit ADC, watchdog and RTC, DMA controller, PDM stream processor, SWD debug interface
- On-board chip antenna (BLUENRG-M2SA) or PCB antenna (BLUENRG-M2SP)
- Small form factor: 11.5 mm x13.5 mm
- Complemented with Bluetooth low energy protocol stack library (GAP, GATT, SM, L2CAP, LL)
- AES secutity co-processor
- Bluetooth low energy SDK with a wide range of available profiles
- Certification
  - CE qualified
  - FCC, IC modular approval certified
  - TYPE qualified
  - BQE qualified
  - WPC certification
  - SRRC certification (BlueNRG-M2SA)
  - KCC cerification
- Pre-programmed UART bootloader
- Operating supply voltage: from 1.7 to 3.6 V
- Operating temperature range: -40 °C to 85 °C

Applications

- Internet of Things
- Smart Home
- Building and industrial automation
- Smart Lighting
- Remote and access control
- Fitness, wellness and sports
- Consumer medical

- Security and proximity
- Assisted living
- PC and smart phone peripherals

Description

The BlueNRG-M2 is a Bluetooth® low energy system-on-chip application processor certified module, certified under BT specifications v5.2 and BQE qualified. The BlueNRG-M2 module supports multiple roles simultaneously and can act at the same time as Bluetooth master and slave device. The BlueNRG-M2 is based on the BlueNRG-2 system-on-chip and entire Bluetooth low energy stack and protocols are embedded into module. The BlueNRG-M2 module provides a complete RF platform in a tiny form factor. Radio, embedded antenna and high frequency oscillators are integrated to offer a certified solution to optimize the time-to-market of the final applications. The BlueNRG-M2 can be powered directly with a pair of AAA batteries or any power source from 1.7 to 3.6 V.

1 General description

The BlueNRG-M2 is a Bluetooth low energy application processor modules certified under Bluetooth® v5.2 specifications.

The BlueNRG-M2 module has been designed around the ST BlueNRG-2 SoC where its Cortex-M0 core can execute both Bluetooth protocols and customer application. Optimized memory architecture includes 256 kB of Flash memory and 24 kB of ultra-low-leakage RAM (with full data retention). A complete power-optimized Bluetooth stack library provides:

- Master, slave, multiple role support
- GAP: central, peripheral, observer or broadcaster roles
- Simultaneous advertising and scanning
- Capability of being slave of up to two masters simultaneously
- ATT/GATT: client and server
- SM: privacy, authentication and authorization
- L2CAP
- Link Layer: AES-128 encryption and decryption

In the BLUENRG-M2SA module both 32 MHz and 32 kHz crystal oscillators are available. It has been designed to leverage the BlueNRG-2 integrated DC-DC step down converter in order to achieve the best power consumption in active mode. It also embeds a high efficiency chip antenna. It can be configured to support both application processor (host-less) and network processor (hosted) modes.

Being based on the BlueNRG-2 SoC, the BlueNRG-M2 module leverages all tools and documentation of its ecosystem: development kit, application notes, user manuals, design notes & Tips. A wide set of sample programs are also available in C source code.

The BlueNRG-M2 module has a wide set of peripherals available for customer applications (1 x UART interface, 1 x SPI interface, 1 x I^2C interface, 14 GPIO, 2 x multifunction timer, 10-bit ADC, watchdog & RTC, DMA controller, PDM stream processor).

The BlueNRG-M2 module enables wireless connectivity into electronic devices, not requiring any RF experience or expertise for integration into the final product. The BlueNRG-M2 module provides a complete RF application platform in a tiny form factor (11.5 x 13.5 x 2.0 mm) and being a certified solution optimizes the time to market of the final applications.

The BlueNRG-M2 module allows applications to meet the tight advisable peak current requirements imposed with the use of standard coin cell batteries. Optimized results are obtained when the embedded high-efficiency DC-DC step-down converter is used (BLUENRG-M2SA). Instead, for the BLUENRG-M2SP the best performance in terms of power consumption is achieved using a 1.8 V DC power supply. The BlueNRG-M2 can be powered directly with a standard 3 V coin cell battery as with a pair of AAA batteries or any power source from 1.7 to 3.6 V.

2 Block diagram

Figure 1. **HW block diagram for the BlueNRG-M2**

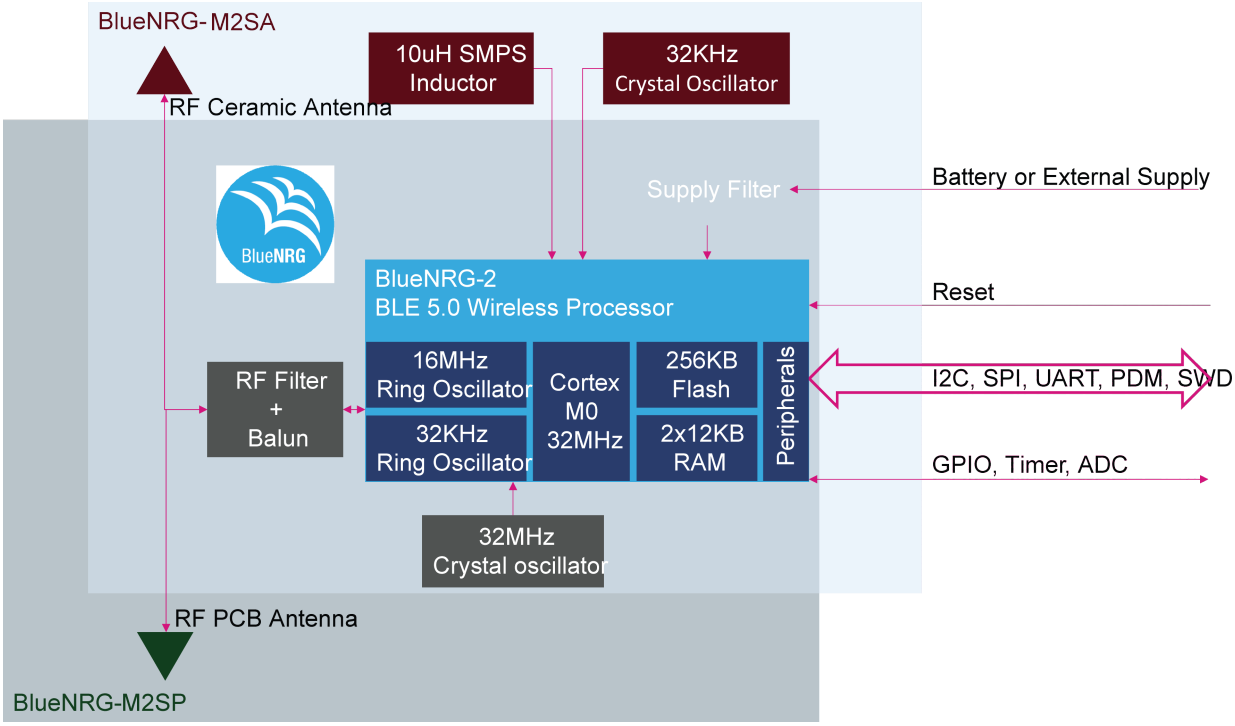

3 Software architecture

3.1 Software development kit

The BlueNRG-M2 module embeds the BlueNRG-2 application processor. Refer to the BlueNRG-2 web page (http://www.st.com) to get access to:

- BlueNRG-2 datasheet
- development kit
- Application notes
- User manuals
- Tools and software
- Design note and tips

Software and firmware should be configured taking into account the BlueNRG-M2 specific configuration as described in Section 2: Block diagram.

The BLUENRG-M2SA module has:

- 32 MHz crystal oscillator
- 32 kHz crystal oscillator
- SMPS DC-DC converter
- 10 µH SMPS inductor

The projects provided with the development kit should be customized defining as following:

- HS_SPEED_XTAL=HS_SPEED_XTAL_32MHZ
- LS_SOURCE=LS_SOURCE_EXTERNAL_32KHZ
- SMPS_INDUCTOR=SMPS_INDUCTOR_10uH

The BLUENRG-M2SP module has:

- 32 MHz crystal oscillator
- LDO converter

The projects provided with the development kit should be customized as follows:

- HS_SPEED_XTAL=HS_SPEED_XTAL_32MHZ
- LS_SOURCE=LS_SOURCE_INTERNAL_RO
- SMPS_INDUCTOR=SMPS_INDUCTOR_NONE

3.2 Software structure

There are two possible software architectures:

1. Host-less mode (application processor): customer application runs on the BlueNRG-M2 module. Many sample projects are available in the development kit

Figure 2. BlueNRG-M2 - BLE application processor

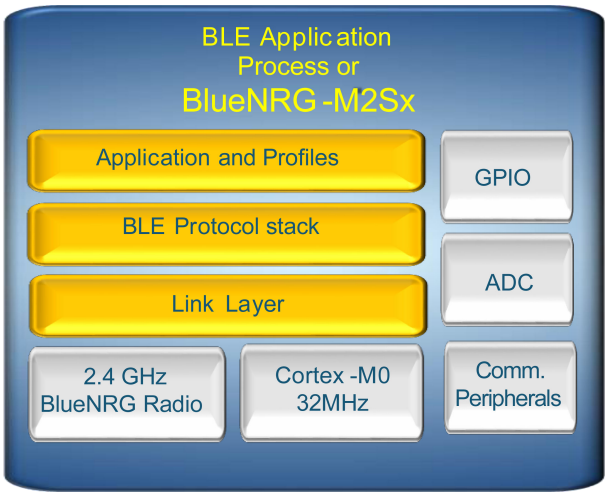

1. *Hosted mode (network processor): the module is configured as network module controlled by an external host connected via SPI or UART. A project named DTM is available in the development kit that configures the BlueNRG-M2 module as a network module.*

Figure 3. BlueNRG-M2 as BLE network processor

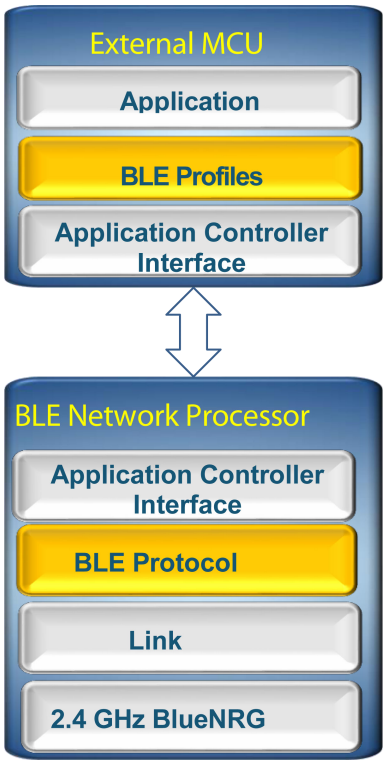

4 General characteristics

4.1 Absolute maximum ratings

Table 1. Absolute maximum ratings

Ratings	Min.	Typ.	Max.	Unit
Storage temperature range	-40	-	+85	°C
Supply voltage, V_{IN}	-0.3	-	3.9	V
I/O pin voltage, V_{IO}	-0.3	-	3.9	V
RF saturation input power	-	8	-	dBm
VESD-HBM electrostatic discharge voltage	-	±2.0	-	kV

4.2 Operating conditions

Table 2. Operating conditions

Ratings	Min.	Typ.	Max.	Unit
Storage temperature range	-40	-	+85	°C
Operating ambient temperature range	-40	-	+85	°C
Supply voltage, V_{IN}	1.7	3.3	3.6	V
Signals and I/O pin voltage (according supply voltage)	1.7	-	3.6	V
Frequency range	2402	-	2480	MHz

5 Electrical specifications

5.1 Electrical characteristics

Characteristic measured over recommended operating conditions unless otherwise specified. Typical values are referred to V_{IN}= 3.3 V, 25 °C, SMPS on, XO 32 kHz and 32 MHz.

Table 3. Electrical characteristics for the BLUENRG-M2SA

Symbol	Parameter	Test conditions	Min.	Typ.	Max.	Unit
IDD	Supply current	Reset	-	5	-	nA
		Standby	-	0.5	-	uA
		Sleep mode: 32 kHz XO ON (24 kB retention RAM)	-	0.9	-	µA
		Active mode	-	1.89	-	mA
		RX	-	7.55	-	mA
		TX +8 dBm	-	14.78	-	mA
		TX +4 dBm	-	10.73	-	mA
		TX +2 dBm	-	9.27	-	mA
		TX -2 dBm	-	8.46	-	mA
		TX -5 dBm	-	7.89	-	mA
		TX -8 dBm	-	7.45	-	mA
		TX -11 dBm	-	7.17	-	mA
		TX -14 dBm	-	7.01	-	mA

Characteristic measured over recommended operating conditions unless otherwise specified. Typical values are referred to V_{IN}= 3.3 V, 25 °C, SMPS off, RO 32 kHz and 32 MHz.

Table 4. Electrical characteristics for the BLUENRG-M2SP

Symbol	Parameter	Test conditions	Min.	Typ.	Max.	Unit
I_{DD}	Supply current	Reset	-	5	-	nA
		Standby	-	0.5	-	uA
		Sleep mode: 32 kHz RO ON (24 kB retention RAM)	-	2.1	-	µA
		Active mode	-	2.75	-	mA
		RX	-	15	-	mA
		TX +8 dBm	-	33.9	-	mA
		TX +4 dBm	-	22.6	-	mA
		TX +2 dBm	-	19.1	-	mA
		TX -2 dBm	-	16.9	-	mA
		TX -5 dBm	-	15.6	-	mA
		TX -8 dBm	-	14.7	-	mA
		TX -11 dBm	-	14.1	-	mA
		TX -14 dBm	-	13.7	-	mA

5.2 Digital I/O specifications

IO pins are directly connected to the embedded state of the art BlueNRG-2 chipset. For more details about the digital I/O specifications, please refer directly to the BlueNRG-2 datasheet available on www.st.com.

5.3 RF general characteristics

Characteristic measured over recommended operating conditions unless otherwise specified. Typical value are referred to V_{IN}= 3.3 V, 25 °C, DC/DC on, XO 32 kHz (BLUENRG-M2SA only) and XO 32 MHz.

Table 5. RF general characteristics

Symbol	Parameter	Test conditions	Min.	Typ.	Max.	Unit
FREQ	Frequency range	-	2400	-	2483.5	MHz
FCH	Channel spacing	-	-	2	-	MHz
RFch	RF channel center frequency	-	2402	-	2480	MHz

Table 6. BLUENRG-M2SA RF characteristics

Symbol	Parameter	Test conditions	Min.	Typ.	Max.	Unit
RPMAX(1)	Output power(2)	Radiated	-	+5	-	dBm
RXSENS	Sensitivity(2)	Conducted	-	-85	-	dBm

1. *PA-Level set to 0x07 and En-High_Power set to 0x01 (corresponding to +8 dBm in conducted mode).*
2. *Radiated power may be impacted by application board / housing / etc.*

Table 7. BLUENRG-M2SP RF characteristics

Symbol	Parameter	Test conditions	Min.	Typ.	Max.	Unit
RPMAX(1)	Radiated output power(2)	Radiated	-	+7	-	dBm
RXSENS	Sensitivity(2)	Conducted	-	-85	-	dBm

1. *PA-Level set to 0x07 and En-High_Power set to 0x01 (corresponding to +8dBm in conducted mode).*
2. *Radiated power may be impacted by application board / housing / etc.*

5.4 Pin assignment

Figure 4. Pin connection for the BLUENRG-M2SA

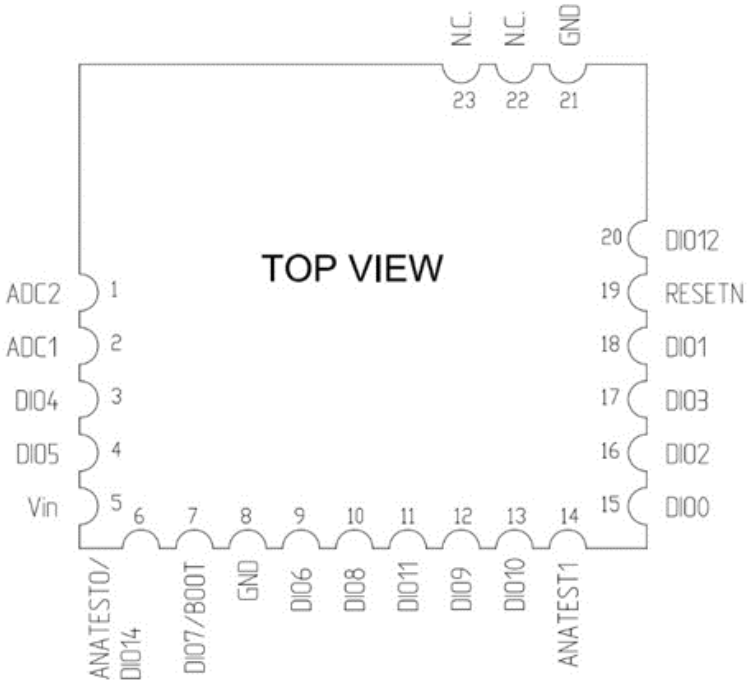

Figure 5. Pin connection for the BLUENRG-M2SP

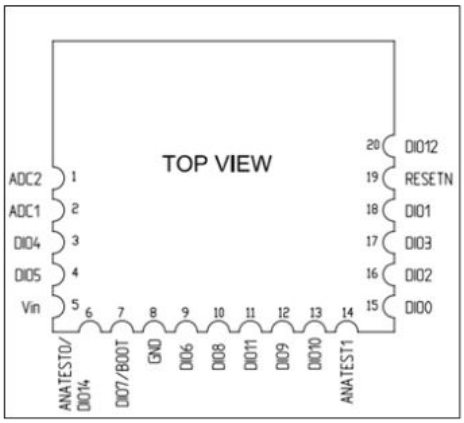

Table 8. Pin connection

Pin #	Name	Function			
		Mode “000”	Mode “001”	Mode “100”	Mode “010”
1	ADC2	ADC input 2			
2	ADC1	ADC input 1			
3	DIO4	GPIO4	UART_RXD	I2C2_CLK	PWM0
4	DIO5	GPIO5	UART_TXD	I2C2_DAT	PWM1
5	VIN	Power Supply			
6	ANATEST0/DIO14	GPIO14	I2C1_CLK	SPI_CLK	ADC_DAT
7	DIO7/BOOT (1)	GPIO7	UART_CTS	I2C2_DAT	PDM_CLK
8	GND	Ground			
9	DIO6	GPIO6	UART_RTS	I2C2_CLK	PDM_DAT
10	DIO8	GPIO8	UART_TXD	SPI_CLK	PDM_DAT
11	DIO11	GPIO11	UART-RXD	SPI_CS1	-
12	DIO9	GPIO9	SWCLK	SPI_IN(2)	-
13	DIO10	GPIO10	SWDIO	SPI_out(3)	-
14	ANATEST1	Anatest1			
15	DIO0	GPIO0	UART_CTS	SPI_CLK	-
16	DIO2	GPIO2	PWM0	SPI_OUT	PDM_CLK
17	DIO3	GPIO3	PWM1	SPI_IN	ADC_CLK
18	DIO1	GPIO1	UART_RTS	SPI_CS1	PDM_DAT
19	RESETN	Reset			
20	DIO12	GPIO12 (4)	-	I2C1_CLK	-
21(5)	GND	Ground or leave unconnected			
22(5)	N.C.	Leave unconnected			
23(5)	N.C.	Leave unconnected			

1. *The pin DIO7/BOOT is monitored by bootloader after power-up or hardware reset and it should be low to prevent unwanted bootloader activation.*
2. *The function SPI_IN indicates that the pin is always an input when configured for SPI. Thus in case of SPI master role, it acts as MISO pin. In case of SPI slave role, this pin act as MOSI*
3. *The function SPI_OUT indicates that the pin is always an output when configured for SPI. Thus in case of SPI master role, it acts as MOSI pin. In case of SPI slave role, this pin act as MISO.*
4. *DI012 can only be general purpose input pins (not output), or I^2C1 clock pin.*
5. *BLUENRG-M2SA only.*

6 Hardware design

Note:

- *All unused pins should be left floating; do not ground*
- *All GND pins must be well grounded*
- *The area around the module should be free of any ground planes, power planes, trace routings, or metal for 6 mm from the module antenna position, in all directions.*
- *Traces should not be routed underneath the module*

6.1 Reset circuitry

The BlueNRG-M2 module requires an external reset circuitry to ensure proper operation at power-on. Refer to the "Reset management" section of the BlueNRG-2 datasheet for details.

Figure 6. Reset circuitry

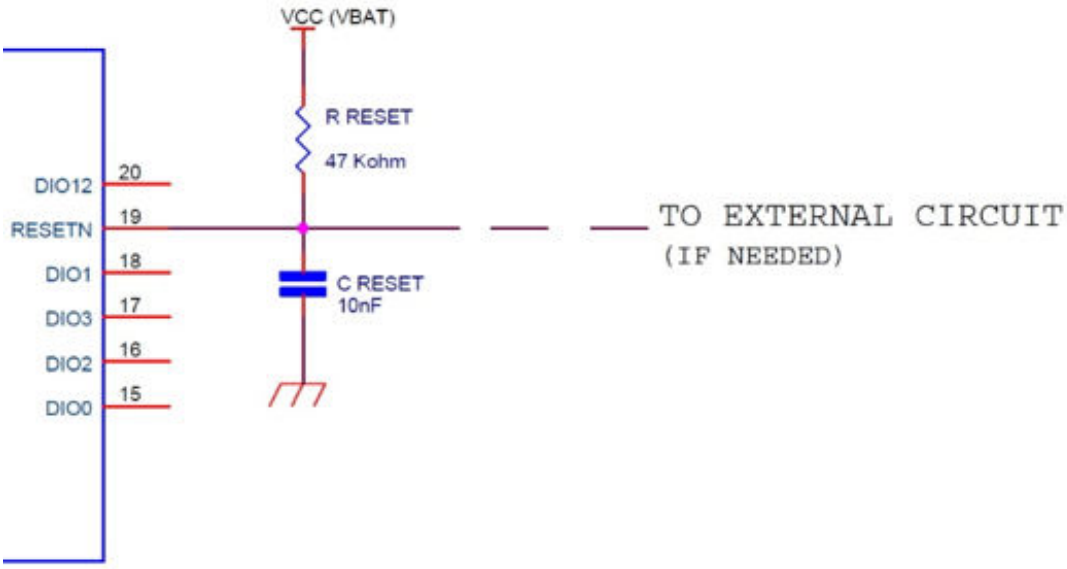

If reset pin is controlled by an external host, RC circuit on the RESETn line is not required.

6.2 Debug interface

The BlueNRG-M2 embeds the ARM serial wire debug (SWD) port. It is two pin (clock and single bi-directional data) debug interface, providing all the debug functionality plus real time access to system memory without halting the processor or requiring any target resident code

Table 9. Debug interface

Pin functionality	Module PIN	Pin description
SWCLK	12	SWD clock signal
SWDIO	13	SWD data signal

For more information refer to the BlueNRG-2 technical documentation (https://www.st.com).

6.3 Reflow soldering

The BlueNRG-M2 is a high temperature strength surface mount Bluetooth® module supplied on a 23-pin (BLUENRG-M2SA) or 20 pin (BLUENRG-M2SP), 4-layer PCB. The final assembly recommended reflow profiles are indicated here below.

Soldering phase has to be executed with care: in order to avoid undesired melting phenomenon, particular attention has to be taken on the set up of the peak temperature.

Here are some suggestions for the temperature profile based on the following recommendations.

Table 10. Soldering profile

Profile feature	PB-free assembly
Average ramp up rate (T_{SMAX} to T_p)	3°C/ s max.
Preheat temperature min (T_S min.) temperature max (T_S max.) time (t_S min to t_S max.) (t_S)	 150 °C 200 °C 60-100 s
Time maintained above Temperature T_L Time t_L	 217 °C 60-70 s
Peak temperature (T_P)	240 +0 °C
Time within 5 °C of peak temperature (T_P -5°)	10-20 s
Ramp down rate	6 °C/s
Time from 25 °C to peak temperature	8 minutes max.

Figure 7. Soldering profiles

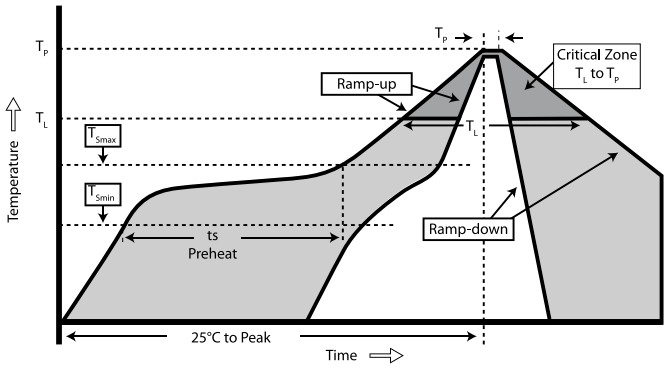

7 Regulatory compliance

7.1 FCC certification

This module has been tested and found to comply with the FCC part 15 rules. These limits are designed to provide reasonable protection against harmful interference in approved installations. This equipment generates, uses, and can radiate radio frequency energy and, if not installed and used in accordance with the instructions, may cause harmful interference to radio communications.

However, there is no guarantee that interference may not occur in a particular installation.

This device complies with part 15 of the FCC rules. Operation is subject to the following two conditions:

1. this device may not cause harmful interference
2. this device must accept any interference received, including interference that may cause undesired operation

Modifications or changes to this equipment not expressly approved by STMicroelectronics may render void the user's authority to operate this equipment.

Modular approval

FCC ID: S9NBNRGM2SA & S9NBNRGM2SP

In accordance with FCC part 15, the BLUENRG-M2SA and BLUENRG-M2SP is listed as a modular transmitter device.

This module is evaluated for stand-alone use only. Finished products incorporating multiple transmitters must comply with collocation and RF exposure requirements in accordance with FCC multi-transmitter product procedures. Collocated transmitters operating in portable RF Exposure conditions (e.g. <20 cm from persons including but not limited to body worn and hand held devices) may require separate approval.

7.1.1 Labeling instructions

When the BLUENRG-M2SA and BLUENRG-M2SP are integrated into the final product, the OEM must ensure that the FCC labeling requirements are satisfied. A statement must be included on the exterior of the final product which indicates the product includes a certified module. The label should state the following (or similar wording that conveys the same meaning):

Contains FCC ID: S9NBNRGM2SA & S9NBNRGM2SP

OR

This product contains FCC ID: S9NBNRGM2SA & S9NBNRGM2SP

The OEM must include the following statements on the exterior of the final product unless the product is too small (e.g. less than 4 x 4 inches):

This device complies with part 15 of the FCC rules. Operation is subjected to the following two conditions:

1. this device may not cause harmful interference and
2. this device must accept any interference received, including any interference that may cause undesired operations.

7.1.2 Product manual instructions

This section applies to OEM final products containing the BlueNRG-M2 module, subjected to FCC compliance. The final product manual must contain the following statement (or a similar statement that conveys the same meaning):

Note: *Changes or modifications not expressly approved by the party responsible for compliance could void the user's authority to operate the equipment. (Part. 15.21)*

In the case where an OEM seeks Class B (residential) limits for the final product, the following statement must be included in the final product manual:

Note: This equipment has been tested and found to comply with the limits for a Class B digital device, pursuant to part 15 of the FCC rules. These limits are designed to provide reasonable protection against harmful interference in a residential installation. This equipment generates, uses and can radiate radio frequency energy and, if not installed and used in accordance with the instructions, may cause harmful interference to radio communications. However, there is no guarantee that interference will not occur in a particular installation. If this equipment does cause harmful interference to radio or television reception, which can be determined by turning the equipment off and on, the user is encouraged to try to correct the interference by one or more of the following measures:

- *Reorient or relocate the receiving antenna*
- *Increase the separation between the equipment and receiver*
- *Connect the equipment into an outlet on a circuit different from that to which the receiver is connected*
- *Consult the dealer or an experienced radio/TV technician for help*

In the case where an OEM seeks the lesser category of a Class A digital device for the final product, the following statement must be included in the final product manual:

Note: This equipment has been tested and found to comply with the limits for a Class A digital device, pursuant to part 15 of the FCC rules. These limits are designed to provide reasonable protection against harmful interference when the equipment is operated in a commercial environment. This equipment generates, uses, and can radiate radio frequency energy and, if not installed and used in accordance with the instruction manual, may cause harmful interference to radio communications. Operation of this equipment in a residential area is likely to cause harmful interference in which case the user will be required to correct the interference at his expense.

7.2 IC certification

This device contains license-exempt transmitter(s)/receiver(s) that comply with innovation, science and economic development Canada's license-exempt RSS(s). Operation is subjected to the following two conditions:

1. this device may not cause interference

and

1. this device must accept any interference, including interference that may cause undesired operations of the device.

In addition, in accordance with RSS-102 clause 2.6, the RF exposure compliance distance of the BlueNRG-M2 is set equal to 15 mm.

Modular approval

IC: 8976C-BNRGM2SA and 8976C-BNRGM2SP

In accordance with IC RSS-247, the BlueNRG-M2 is listed as a modular transmitter device.

This module is evaluated for stand-alone use only. Finished products incorporating multiple transmitters must comply with collocation and RF exposure requirements in accordance with IC multi-transmitter product procedures. Collocated transmitters operating in portable RF Exposure conditions (e.g. <20 cm from persons including but not limited to body worn and hand held devices) may require separate approval.

7.2.1 Labeling instructions

When the BlueNRG-M2 is integrated into the final product, the OEM must ensure that the IC labeling requirements are satisfied. A statement must be included on the exterior of the final product which indicates that the product includes a certified module. The label should state the following (or similar wording that conveys the same meaning):

Contains IC: 8976C-BNRGM2SA and 8976C-BNRGM2SP

or

this product contains IC: 8976C-BNRGM2SA and 8976C-BNRGM2SP

The OEM must include the following statements on the exterior of the final product unless the product is too small (e.g. less than 4 x 4 inches).

7.3 CE certification

The BlueNRG-M2 module has been certified according to the following certification rules:

- ETSI EN 300 328 V 2.2.2 (1)
- ETSI EN 301 489-17 V3.2.4 (2)
- ETSI EN 301 489-1 V2.2.3(3)
- EN 62368-1:2020/A11:2020(4)

- EN 62311:2008

1. *ETSI EN 300 328 V2.2.2 (2019-07): "Wideband transmission systems;Data transmission equipment operating in the 2,4 GHz band;Harmonized Standard for access to radio spectrum".*
2. *ETSI EN 301 489-17 V3.2.4 (2020-09): "ElectroMagnetic Compatibility (EMC)standard for radio equipment and services; Part 17: Specific conditions for Broadband Data Transmission Systems;Harmonised Standard for ElectroMagnetic Compatibility.*
3. *ETSI EN 301 489-1 V2.2.3 (2019-11): "ElectroMagnetic Compatibility (EMC) standard for radio equipment and services; Part 1: Common technical requirements; Harmonised Standard for ElectroMagnetic Compatibility.*
4. *EN 62368-1:2020/A11:2020: "Audio/video, information and communication technology equipment - Part 1: Safety requirements".*

The module is provided by CE marking:

The module has obtained the RED certificate:

- 0051-RED-0092 (BLUENRG-M2SA)
- 0051-RED-0098 (BLUENRG-M2SP)

Hereby, STMicroelectronics declares that the radio equipment type BLUENRG-M2 is in compliance with Directive 2014/53/EU.

The full text of the EU declaration of conformity is available at the following internet address:

https://www.st.com/en/wireless-connectivity/bluenrg-m2.html#documentation

The certified module production firmware release is: 2.X

For additional information please refer to: STMicroelectronics Via C. Olivetti 2, Agrate Brianza 20864 (ITALY).

7.4 TYPE certification

The BlueNRG-M2 module has been tested according to following TYPE certification rules:

- Type of specified radio equipment
  - Radio equipment according to certification ordinance article 2-1-9
- Sophisticated low power radio data communication system in 2.4 GHz band.
- Class of emissions, assigned frequency, and antenna power
  - F1D 2402 - 2480 MHz channel separation 2 MHz/40 channel, 0.005 W
- Certification number:
  - 006-000725 (BLUENRG-M2SA)
  - 006-000726 (BLUENRG-M2SP)

7.5 WPC ETA certificate

The BlueNRG-M2 module is registered for equipment type approval (ETA) with WPC India.

- Registration No: ETA-SD-20190702736 BlueNRG-M2SP
- Registration No: ETA-SD-20210805996 BlueNRG-M2SA

7.6 SRRC certification

7.6.1 Modular approval

The BlueNRG-M2SA module complies with Chinese SRRC certification.

- SRRC CMIIT ID: 2021DP1341

7.6.2 SRRC labeling instructions

When the BlueNRG-M2SA is intergrated into the final product, the OEM must ensure that the FCC labeling requirements are satisfied. A statement must be included on the exterior of the final product, which indicates the product includes a certified module. The label should state the following (or similar wording that conveys the same

meaning):
this product uses the SRRC approved radio modular. CMIIT ID: 2021DP1341.

7.7 Bluetooth certification

The module with embedded stack and profile has been qualified in accordance with SIG qualification rules:

- Declaration ID: D043965
- Upgraded declaration ID: U053518
- Qualified design ID: 160033
- Product type: End Product
- Core spec version: 5.2
- Product description: Bluetooth low energy v5.2 module

8 Package information

In order to meet environmental requirements, ST offers these devices in different grades of ECOPACK packages, depending on their level of environmental compliance. ECOPACK specifications, grade definitions and product status are available at: www.st.com. ECOPACK is an ST trademark.

8.1 BLUENRG-M2SA package information

Figure 8. BLUENRG-M2SA package outline

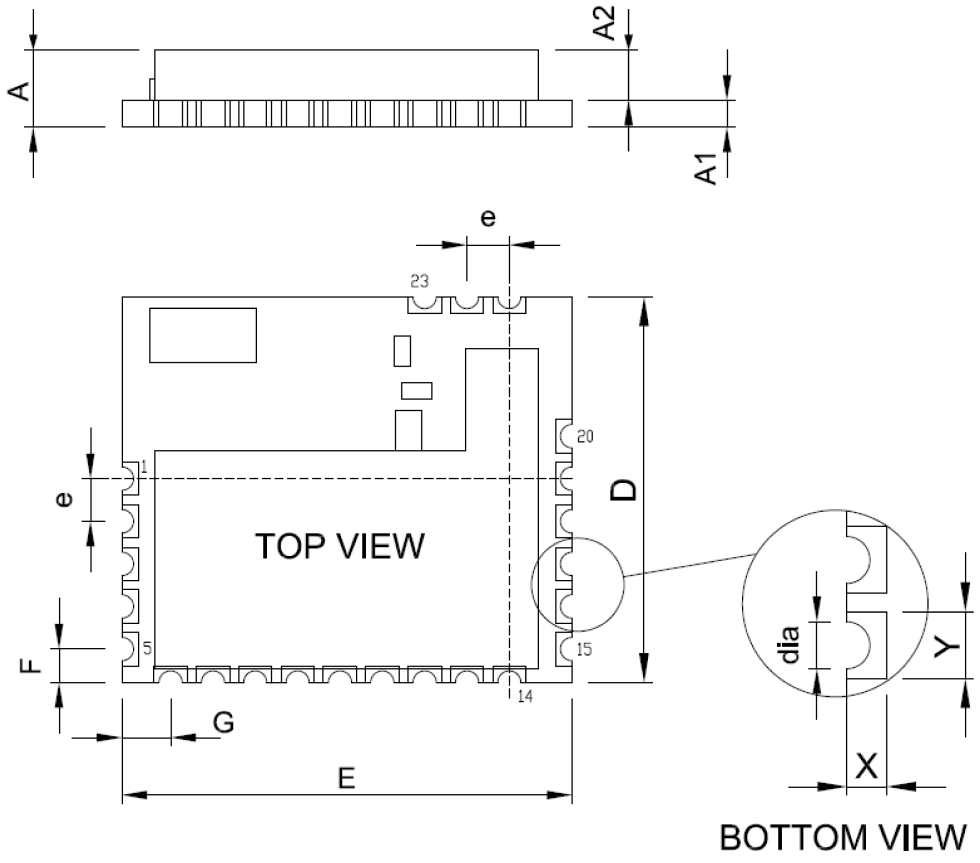

Table 11. BLUENRG-M2SA mechanical data

Symbol	mm		
	Min.	Typ.	Max.
A	2.1	2.3	2.5
A1	0.7	0.8	0.9
A2	1.4	1.5	1.6
D	-	11.5	-
E	-	13.5	-
F	-	1	-
G	-	1.46	-
dia	-	0.7	-
Pad size X,Y (on bottom side)	-	0.6x1	-
e-pitch	-	1.27	tol.+/-0.025

Figure 9. BLUENRG-M2SA recommended footprint

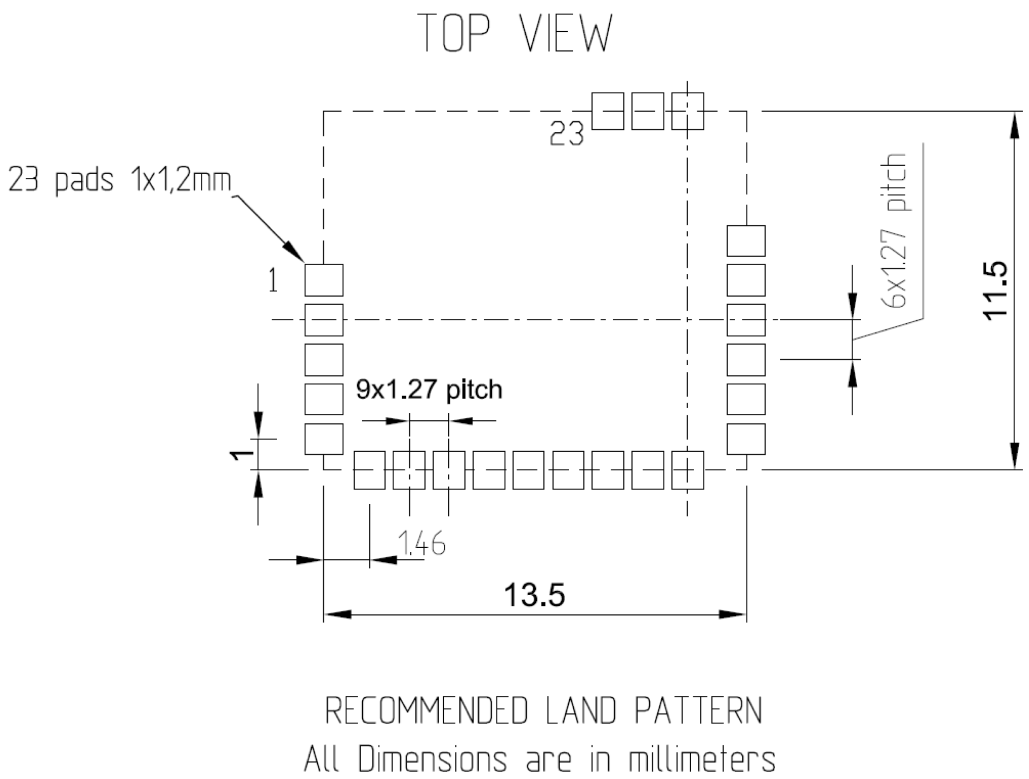

8.2 BLUENRG-M2SP package information

Figure 10. **BLUENRG-M2SP package outline**

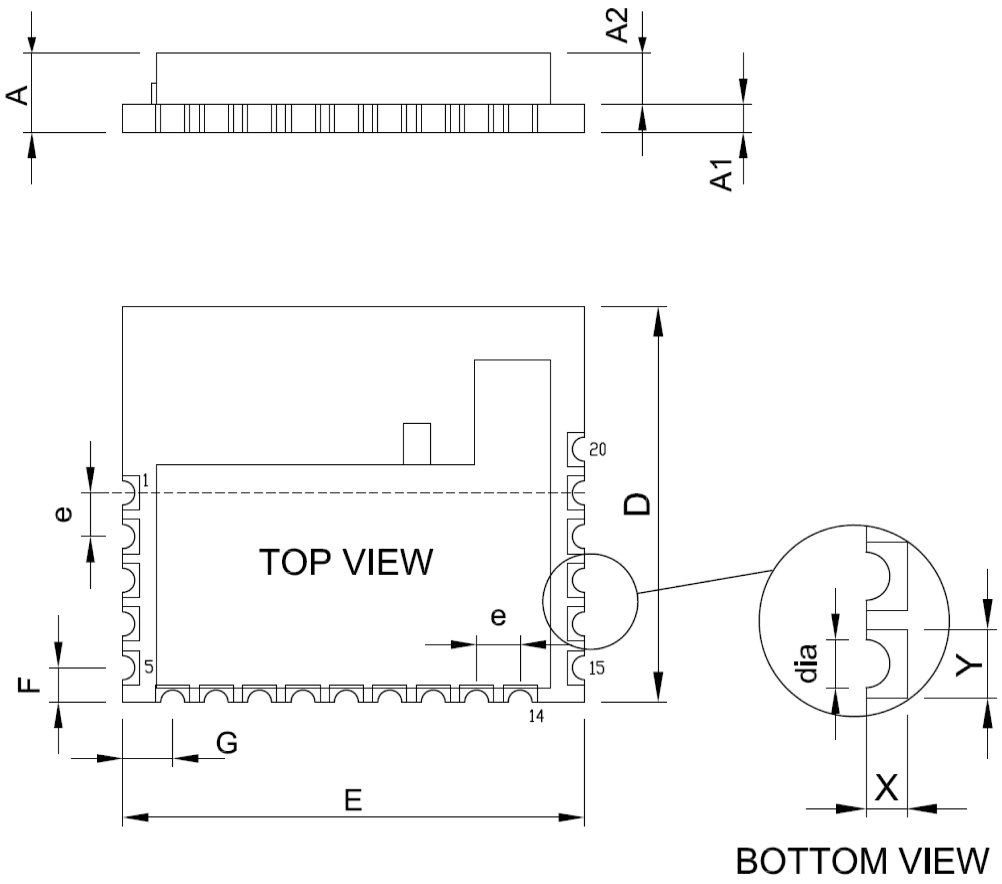

Table 12. BLUENRG-M2SP mechanical data

Symbol	mm		
	Min.	Typ.	Max.
A	2.1	2.3	2.5
A1	0.7	0.8	0.9
A2	1.4	1.5	1.6
D	-	11.5	-
E	-	13.5	-
F	-	1	-
G	-	1.46	-
dia	-	0.7	-
Pad size X,Y (on bottom side)	-	0.6x1	-
e-pitch	-	1.27	tol.+/-0.025

Figure 11. BLUENRG-M2SP recommended footprint

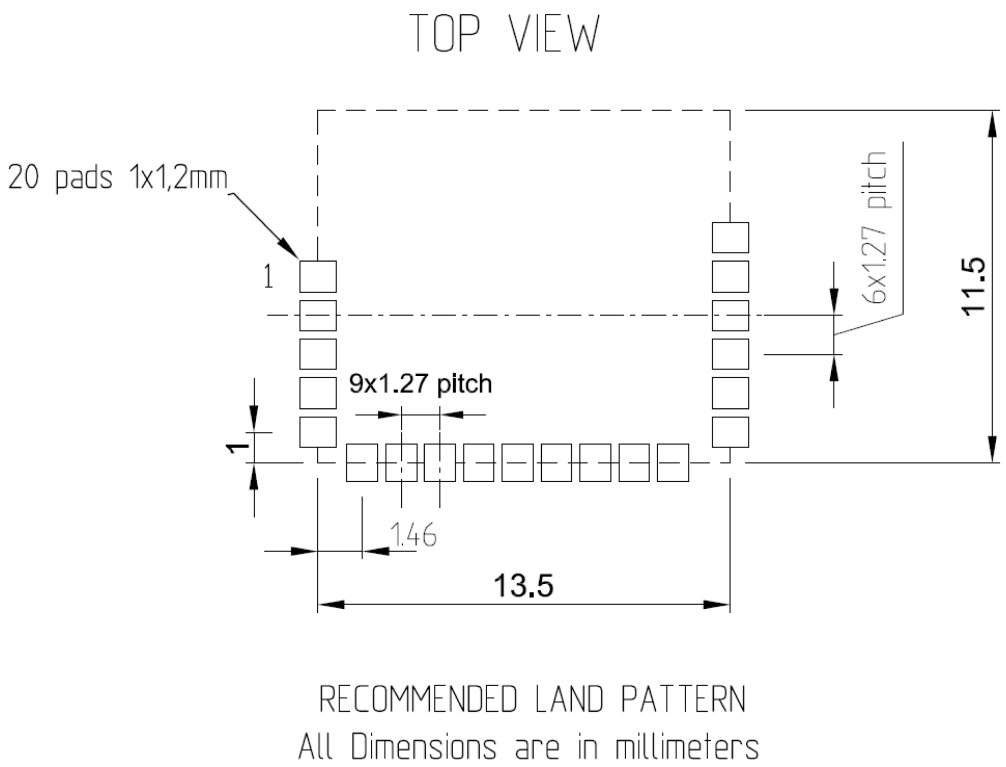

8.3 BlueNRG-M2 packing information

Figure 12. BlueNRG-M2 tape outline

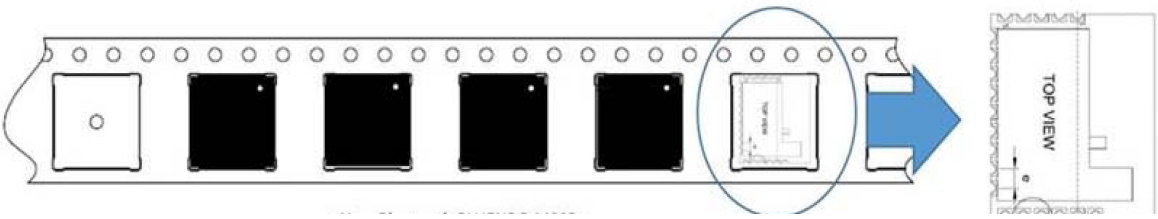

Figure 13. BlueNRG-M2 tape dimension outline

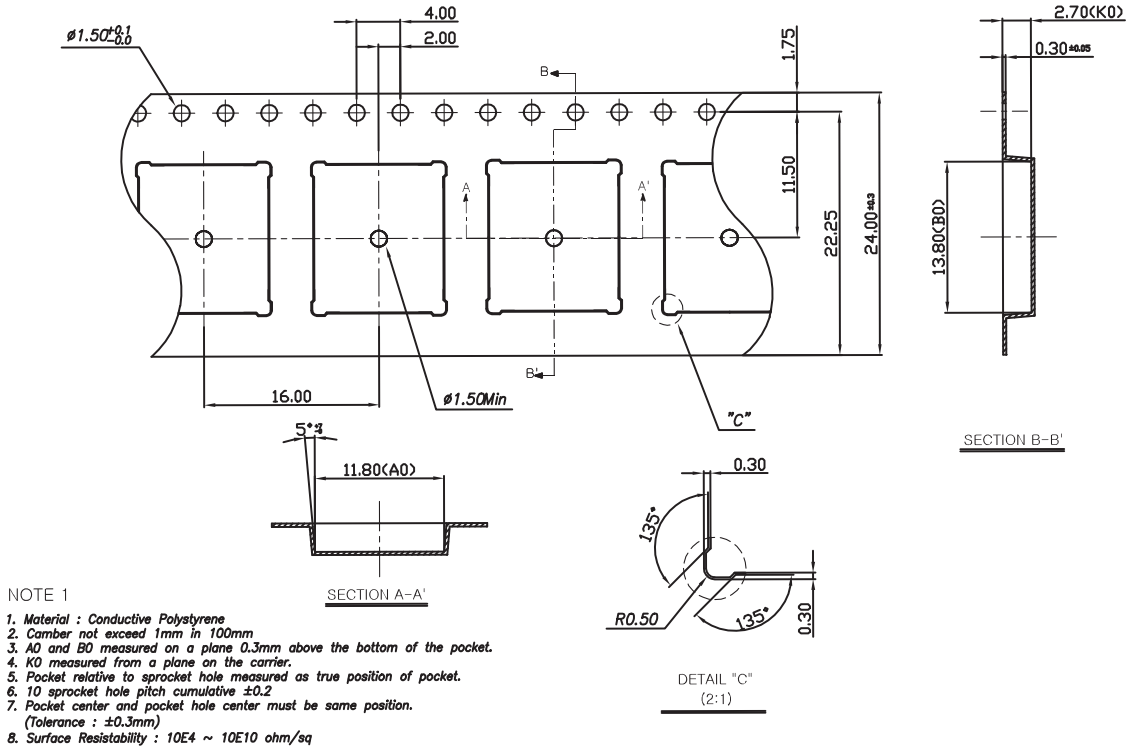

Figure 14. **BlueNRG-M2 reel outline**

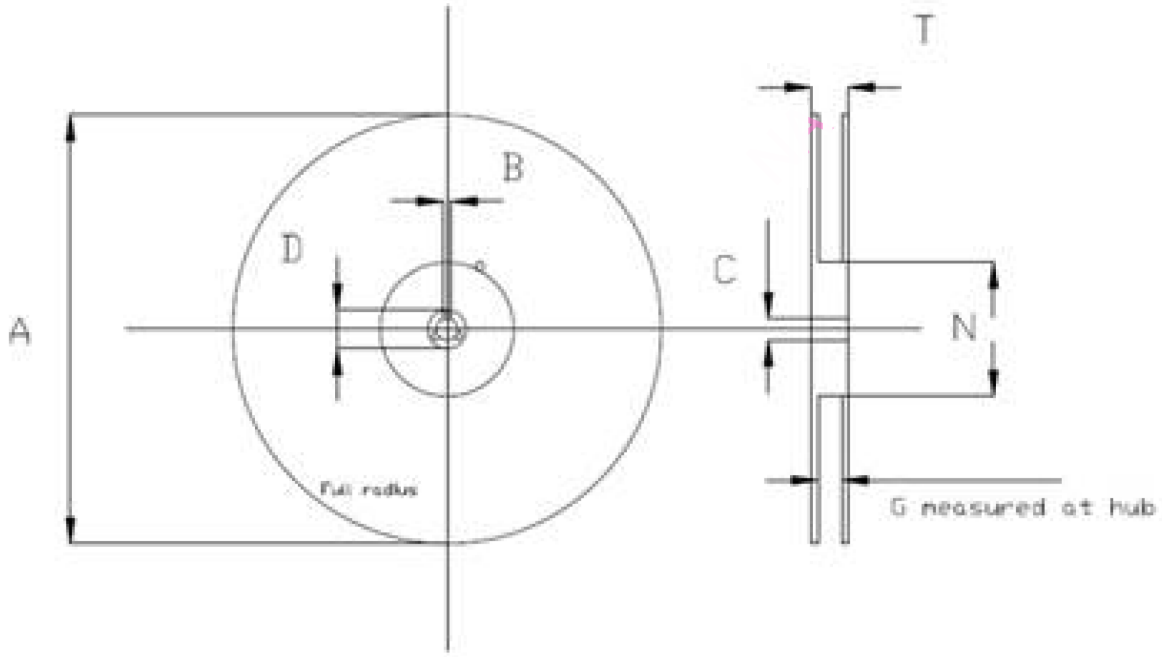

Table 13. **BlueNRG-M2 reel mechanical data**

Dimensions	Reel	
	Min.	Max.
A	328	332
B	1.5	-
C	12.8	13.5
D	20.2	-
G	24.4	26.4
N	100	103
T	26.4	30.4

9 Traceability

Each module is univocally identified by serial number stored in a 2D data matrix laser marked on the top side (shield) of the module itself.

Each module bulk is identified by a bulk ID.

Bulk ID and module 2D data matrix are linked by a reciprocal traceability link. The module 2D data matrix traces the lot number of any raw material used according to following rules:

Table 14. Traceability information

Letter	Meaning
HA	Reserved
YWW	Year and week number
E	Reserved
LL	Lot sequence number
XX	Lot sub-sequence number
0000	Serial number

Revision history

Table 15. Document revision history

Date	Version	Changes
26-Jun-2019	1	Initial release.
24-Jul-2019	2	Updated features in cover page, Figure 4. Pin connection for the BLUENRG-M2SA and Figure 6. Reset circuitry. Added Section 8.3: BlueNRG-M2 packing information
13-Jan-2021	3	Updated cover image, , Section Description, Section 1: General description, Table 10. Soldering profile, Section 7.3: CE certification, Section 7.7: Bluetooth certification. Added Section 7.5: WPC ETA certificate.
04-Mar-2021	4	Updated . Added Section 7.6: SRRC certification, Section 7.6.1: Modular approval and Section 7.6.2: SRRC labeling instructions.
19-Oct-2021	5	Updated and Section 7.3: CE certification.
28-Oct-2021	6	Updated Table 8. Pin connection.
10-Dec-2021	7	Updated , and Section 7.5: WPC ETA certificate.
20-Mar-2024	8	Updated Table 1.

Contents

1 General description . . . 3
2 Block diagram . . . 4
3 Software architecture . . . 5
3.1 Software development kit . . . 5
3.2 Software structure . . . 6
4 General characteristics . . . 7
4.1 Absolute maximum ratings . . . 7
4.2 Operating conditions . . . 7
5 Electrical specifications . . . 8
5.1 Electrical characteristics . . . 8
5.2 Digital I/O specifications . . . 9
5.3 RF general characteristics . . . 10
5.4 Pin assignment . . . 11
6 Hardware design . . . 13
6.1 Reset circuitry . . . 13
6.2 Debug interface . . . 13
6.3 Reflow soldering . . . 14
7 Regulatory compliance . . . 15
7.1 FCC certification . . . 15
7.1.1 Labeling instructions . . . 15
7.1.2 Product manual instructions . . . 15
7.2 IC certification . . . 16
7.2.1 Labeling instructions . . . 16
7.3 CE certification . . . 16
7.4 TYPE certification . . . 17
7.5 WPC ETA certificate . . . 17
7.6 SRRC certification . . . 17
7.6.1 Modular approval . . . 17
7.6.2 SRRC labeling instructions . . . 17
7.7 Bluetooth certification . . . 18
8 Package information . . . 19
8.1 BLUENRG-M2SA package information . . . 19
8.2 BLUENRG-M2SP package information . . . 21
8.3 BlueNRG-M2 packing information . . . 23

9 Traceability 25
Revision history 26

List of tables

Table 1. Absolute maximum ratings . . . 7
Table 2. Operating conditions . . . 7
Table 3. Electrical characteristics for the BLUENRG-M2SA . . . 8
Table 4. Electrical characteristics for the BLUENRG-M2SP . . . 8
Table 5. RF general characteristics. . . . 10
Table 6. BLUENRG-M2SA RF characteristics . . . 10
Table 7. BLUENRG-M2SP RF characteristics . . . 10
Table 8. Pin connection. . . . 12
Table 9. Debug interface . . . 13
Table 10. Soldering profile. . . . 14
Table 11. BLUENRG-M2SA mechanical data . . . 20
Table 12. BLUENRG-M2SP mechanical data . . . 22
Table 13. BlueNRG-M2 reel mechanical data . . . 24
Table 14. Traceability information. . . . 25
Table 15. Document revision history . . . 26

List of figures

Figure 1. HW block diagram for the BlueNRG-M2 . . . 4
Figure 2. BlueNRG-M2 - BLE application processor . . . 6
Figure 3. BlueNRG-M2 as BLE network processor . . . 6
Figure 4. Pin connection for the BLUENRG-M2SA . . . 11
Figure 5. Pin connection for the BLUENRG-M2SP . . . 11
Figure 6. Reset circuitry . . . 13
Figure 7. Soldering profiles . . . 14
Figure 8. BLUENRG-M2SA package outline . . . 19
Figure 9. BLUENRG-M2SA recommended footprint . . . 20
Figure 10. BLUENRG-M2SP package outline . . . 21
Figure 11. BLUENRG-M2SP recommended footprint . . . 22
Figure 12. BlueNRG-M2 tape outline . . . 23
Figure 13. BlueNRG-M2 tape dimension outline . . . 23
Figure 14. BlueNRG-M2 reel outline . . . 24

IMPORTANT NOTICE – READ CAREFULLY

STMicroelectronics NV and its subsidiaries (“ST”) reserve the right to make changes, corrections, enhancements, modifications, and improvements to ST products and/or to this document at any time without notice. Purchasers should obtain the latest relevant information on ST products before placing orders. ST products are sold pursuant to ST’s terms and conditions of sale in place at the time of order acknowledgment.

Purchasers are solely responsible for the choice, selection, and use of ST products and ST assumes no liability for application assistance or the design of purchasers’ products.

No license, express or implied, to any intellectual property right is granted by ST herein.

Resale of ST products with provisions different from the information set forth herein shall void any warranty granted by ST for such product.

ST and the ST logo are trademarks of ST. For additional information about ST trademarks, refer to www.st.com/trademarks. All other product or service names are the property of their respective owners.

Information in this document supersedes and replaces information previously supplied in any prior versions of this document.

© 2024 STMicroelectronics – All rights reserved