SNx4HC04 Hex Inverters

1 Features

- Buffered inputs
- Wide operating voltage range: 2 V to 6 V
- Wide operating temperature range: –40°C to +85°C
- Supports fanout up to 10 LSTTL loads
- Significant power reduction compared to LSTTL logic ICs

2 Applications

- Synchronize invterted clock inputs
- Debounce a switch
- Invert a digital signal

3 Description

This device contains six independent inverters. Each gate performs the Boolean function Y = $\overline{A}$ in positive logic.

Device Information(1)

PART NUMBER	PACKAGE	BODY SIZE (NOM)
SN74HC04D	SOIC (14)	8.70 mm × 3.90 mm
SN74HC04DB	SSOP (14)	6.50 mm × 5.30 mm
SN74HC04N	PDIP (14)	19.30 mm × 6.40 mm
SN74HC04NS	SO (14)	10.20 mm × 5.30 mm
SN74HC04PW	TSSOP (14)	5.00 mm × 4.40 mm
SN54HC04J	CDIP (14)	21.30 mm × 7.60 mm
SN54HC04W	CFP (14)	9.20 mm × 6.29 mm
SN54HC04FK	LCCC (20)	8.90 mm × 8.90 mm

(1) For all available packages, see the orderable addendum at the end of the data sheet.

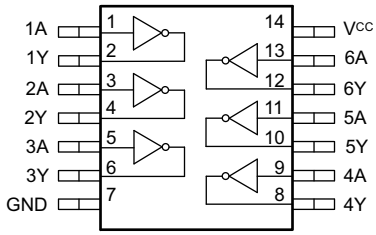

Functional pinout

An IMPORTANT NOTICE at the end of this data sheet addresses availability, warranty, changes, use in safety-critical applications, intellectual property matters and other important disclaimers. PRODUCTION DATA.

Table of Contents

1 Features....1
2 Applications....1
3 Description....1
4 Revision History....2
5 Pin Configuration and Functions....3
Pin Functions....3
6 Specifications....4
6.1 Absolute Maximum Ratings....4
6.2 ESD Ratings....4
6.3 Recommended Operating Conditions....4
6.4 Thermal Information....5
6.5 Electrical Characteristics - 74....5
6.6 Electrical Characteristics - 54....6
6.7 Switching Characteristics - 74....6
6.8 Switching Characteristics - 54....6
6.9 Operating Characteristics....7
6.10 Typical Characteristics....7
7 Parameter Measurement Information....8
8 Detailed Description....9
8.1 Overview....9
8.2 Functional Block Diagram....9
8.3 Feature Description....9
8.4 Device Functional Modes....10
9 Application and Implementation....11
9.1 Application Information....11
9.2 Typical Application....11
10 Power Supply Recommendations....13
11 Layout....13
11.1 Layout Guidelines....13
11.2 Layout Example....13
12 Device and Documentation Support....14
12.1 Documentation Support....14
12.2 Support Resources....14
12.3 Trademarks....14
12.4 Electrostatic Discharge Caution....14
12.5 Glossary....14
13 Mechanical, Packaging, and Orderable Information....14

4 Revision History

NOTE: Page numbers for previous revisions may differ from page numbers in the current version.

Changes from Revision G (July 2015) to Revision H (April 2021)	Page
• Updated the numbering format for tables, figures, and cross-references throughout the document	1
• Updated to new data sheet standards	1
• $R_{\theta JA}$ increased for D (86 to 133.6 °C/W), NS (76 to 122.6 °C/W), and PW (113 to 151.7 °C/W) packages and decreased for the N (80 to 60.7 °C/W)	5

Changes from Revision F (August 2013) to Revision G (July 2015)	Page
• Added *ESD Ratings* table, *Feature Description* section, *Device Functional Modes*, *Application and Implementation* section, *Power Supply Recommendations* section, *Layout* section, *Device and Documentation Support* section, and *Mechanical, Packaging, and Orderable Information* section	1
• ESD warning added	4

Changes from Revision E (October 2010) to Revision F (August 2013)	Page
• Removed Ordering Information table	1

Copyright © 2021 Texas Instruments Incorporated

5 Pin Configuration and Functions

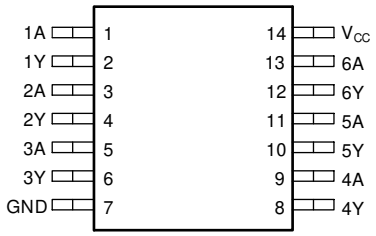

Figure 5-1. D, DB, N, NS, PW, J, or W Package 14-Pin SOIC, SSOP, PDIP, SO, TSSOP, CDIP, or CFP ph Top View

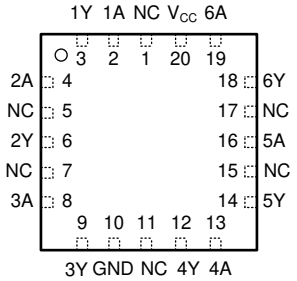

Figure 5-2. FK Package 20-Pin LCCC Top View

Pin Functions

PIN			I/O	DESCRIPTION
NAME	D, DB, N, NS, PW, J, or W	FK		
1A	1	2	Input	Channel 1, Input A
1Y	2	3	Output	Channel 1, Output Y
2A	3	4	Input	Channel 2, Input A
2Y	4	6	Output	Channel 2, Output Y
3A	5	8	Input	Channel 3, Input A
3Y	6	9	Output	Channel 3, Output Y
GND	7	10	—	Ground
4Y	8	12	Output	Channel 4, Output Y
4A	9	13	Input	Channel 4, Input A
5Y	10	14	Output	Channel 5, Output Y
5A	11	16	Input	Channel 5, Input A
6Y	12	18	Output	Channel 6, Output Y
6A	13	19	Input	Channel 6, Input A
V_{CC}	14	20	—	Positive Supply
NC		1, 5, 7, 11, 15, 17	—	Not internally connected

Copyright © 2021 Texas Instruments Incorporated

6 Specifications

6.1 Absolute Maximum Ratings

over operating free-air temperature range (unless otherwise noted)[1]

			MIN	MAX	UNIT
V_{CC}	Supply voltage		–0.5	7	V
I_{IK}	Input clamp current[2]	$V_I < 0$ or $V_I > V_{CC}$		±20	mA
I_{OK}	Output clamp current[2]	$V_O < 0$		±20	mA
I_O	Continuous output current	$V_O = 0$ to V_{CC}		±25	mA
	Continuous current through V_{CC} or GND			±50	mA
T_J	Junction temperature[3]			150	°C
T_{stg}	Storage temperature		–60	150	°C

(1) Stresses beyond those listed under *Absolute Maximum Rating* may cause permanent damage to the device. These are stress ratings only, which do not imply functional operation of the device at these or any other conditions beyond those indicated under *Recommended Operating Condition*. Exposure to absolute-maximum-rated conditions for extended periods may affect device reliability.
(2) The input and output voltage ratings may be exceeded if the input and output current ratings are observed.
(3) Guaranteed by design.

6.2 ESD Ratings

			VALUE	UNIT
$V_{(ESD)}$	Electrostatic discharge	Human-body model (HBM), per ANSI/ESDA/JEDEC JS-001[1]	±2000	V
		Charged-device model (CDM), per JEDEC specification JESD22-C101[2]	–	

(1) JEDEC document JEP155 states that 500-V HBM allows safe manufacturing with a standard ESD control process.
(2) JEDEC document JEP157 states that 250-V CDM allows safe manufacturing with a standard ESD control process.

6.3 Recommended Operating Conditions

over operating free-air temperature range (unless otherwise noted)

			MIN	NOM	MAX	UNIT
V_{CC}	Supply voltage		2	5	6	V
V_{IH}	High-level input voltage	$V_{CC} = 2$ V	1.5			V
		$V_{CC} = 4.5$ V	3.15			
		$V_{CC} = 6$ V	4.2			
V_{IL}	Low-level input voltage	$V_{CC} = 2$ V			0.5	V
		$V_{CC} = 4.5$ V			1.35	
		$V_{CC} = 6$ V			1.8	
V_I	Input voltage		0		V_{CC}	V
V_O	Output voltage		0		V_{CC}	V
Δt/Δv	Input transition rise and fall rate	$V_{CC} = 2$ V			1000	ns
		$V_{CC} = 4.5$ V			500	
		$V_{CC} = 6$ V			400	
T_A	Operating free-air temperature	SN54HC04	–55		125	°C
		SN74HC04	–40		85	

Copyright © 2021 Texas Instruments Incorporated

6.4 Thermal Information

THERMAL METRIC[1]		SN74HC04					UNIT
		D (SOIC)	DB (SSOP)	N (PDIP)	NS (SOP)	PW (TSSOP)	
		14 PINS	14 PINS	14 PINS	14 PINS	14 PINS	
$R_{\theta JA}$	Junction-to-ambient thermal resistance	133.6	114.8	60.7	122.6	151.7	°C/W
$R_{\theta JC(top)}$	Junction-to-case (top) thermal resistance	89	64.5	47.8	81.8	79.4	°C/W
$R_{\theta JB}$	Junction-to-board thermal resistance	89.5	65.1	40.6	83.8	94.7	°C/W
Ψ_{JT}	Junction-to-top characterization parameter	45.5	23.7	26.9	45.4	25.2	°C/W
Ψ_{JB}	Junction-to-board characterization parameter	89.1	64.4	40.3	83.4	94.1	°C/W
$R_{\theta JC(bot)}$	Junction-to-case (bottom) thermal resistance	N/A	N/A	N/A	N/A	N/A	°C/W

(1) For more information about traditional and new thermal metrics, see the Semiconductor and IC Package Thermal Metrics application report.

6.5 Electrical Characteristics - 74

over operating free-air temperature range; typical values measured at T_A = 25°C (unless otherwise noted).

PARAMETER		TEST CONDITIONS		V_{CC}	Operating free-air temperature (T_A)						UNIT
					25°C			-40°C to 85°C			
					MIN	TYP	MAX	MIN	TYP	MAX	
V_{OH}	High-level output voltage	$V_I = V_{IH}$ or V_{IL}	I_{OH} = –20 µA	2 V	1.9	1.998		1.9			V
				4.5 V	4.4	4.499		4.4			
				6 V	5.9	5.999		5.9			
			I_{OH} = –4 mA	4.5 V	3.98	4.3		3.84			
			I_{OH} = –5.2 mA	6 V	5.48	5.8		5.34			
V_{OL}	Low-level output voltage	$V_I = V_{IH}$ or V_{IL}	I_{OL} = 20 µA	2 V		0.002	0.1			0.1	V
				4.5 V		0.001	0.1			0.1	
				6 V		0.001	0.1			0.1	
			I_{OL} = 4 mA	4.5 V		0.17	0.26			0.33	
			I_{OL} = 5.2 mA	6 V		0.15	0.26			0.33	
I_I	Input leakage current	$V_I = V_{CC}$ or 0		6 V			±0.1			±1	µA
I_{CC}	Supply current	$V_I = V_{CC}$ or 0	$V_I = V_{CC}$ or 0	6 V			2			20	µA
C_i	Input capacitance			2 V to 6 V		3	10			10	pF

6.6 Electrical Characteristics - 54

over operating free-air temperature range; typical values measured at TA = 25°C (unless otherwise noted).

PARAMETER		TEST CONDITIONS		V_{CC}	Operating free-air temperature (T_A)									UNIT
					25°C			–40°C to 85°C			–55°C to 125°C			
					MIN	TYP	MAX	MIN	TYP	MAX	MIN	TYP	MAX	
V_{OH}	High-level output voltage	$V_I = V_{IH}$ or V_{IL}	$I_{OH} = –20$ µA	2 V	1.9	1.998		1.9			1.9			V
				4.5 V	4.4	4.499		4.4			4.4			
				6 V	5.9	5.999		5.9			5.9			
			$I_{OH} = –4$ mA	4.5 V	3.98	4.3		3.84			3.7			
			$I_{OH} = –5.2$ mA	6 V	5.48	5.8		5.34			5.2			
V_{OL}	Low-level output voltage	$V_I = V_{IH}$ or V_{IL}	$I_{OL} = 20$ µA	2 V		0.002	0.1			0.1			0.1	V
				4.5 V		0.001	0.1			0.1			0.1	
				6 V		0.001	0.1			0.1			0.1	
			$I_{OL} = 4$ mA	4.5 V		0.17	0.26			0.33			0.4	
			$I_{OL} = 5.2$ mA	6 V		0.15	0.26			0.33			0.4	
I_I	Input leakage current	$V_I = V_{CC}$ or 0		6 V			±0.1			±1			±1	µA
I_{CC}	Supply current	$V_I = V_{CC}$ or 0	$I_O = 0$	6 V			2			20			40	µA
C_i	Input capacitance			2 V to 6 V		3	10			10			10	pF

6.7 Switching Characteristics - 74

over operating free-air temperature range (unless otherwise noted)

PARAMETER		FROM	TO	V_{CC}	Operating free-air temperature (T_A)						UNIT
					25°C			–40°C to 85°C			
					MIN	TYP	MAX	MIN	TYP	MAX	
t_{pd}	Propagation delay	A	Y	2 V		45	95			120	ns
				4.5 V		9	19			24	
				6 V		8	16			20	
t_t	Transition-time		Y	2 V		38	75			95	ns
				4.5 V		8	15			19	
				6 V		6	13			16	

6.8 Switching Characteristics - 54

over operating free-air temperature range; typical values measured at TA = 25°C (unless otherwise noted).

PARAMETER		FROM	TO	V_{CC}	Operating free-air temperature (T_A)									UNIT
					25°C			–40°C to 85°C			–55°C to 125°C			
					MIN	TYP	MAX	MIN	TYP	MAX	MIN	TYP	MAX	
t_{pd}	Propagation delay	A	Y	2 V		45	95			120			125	ns
				4.5 V		9	19			24			29	
				6 V		8	16			20			25	
t_t	Transition-time		Y	2 V		38	75			95			110	ns
				4.5 V		8	15			19			22	
				6 V		6	13			16			19	

Copyright © 2021 Texas Instruments Incorporated

6.9 Operating Characteristics

over operating free-air temperature range; typical values measured at T_A = 25°C (unless otherwise noted).

PARAMETER		TEST CONDITIONS	V_{CC}	MIN	TYP	MAX	UNIT
C_{pd}	Power dissipation capacitance per gate	No load	2 V to 6 V		20		pF

6.10 Typical Characteristics

T_A = 25°C

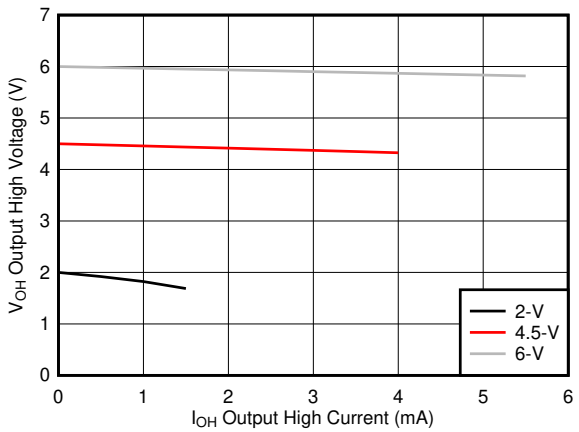

Figure 6-1. Typical output voltage in the high state (V_{OH})

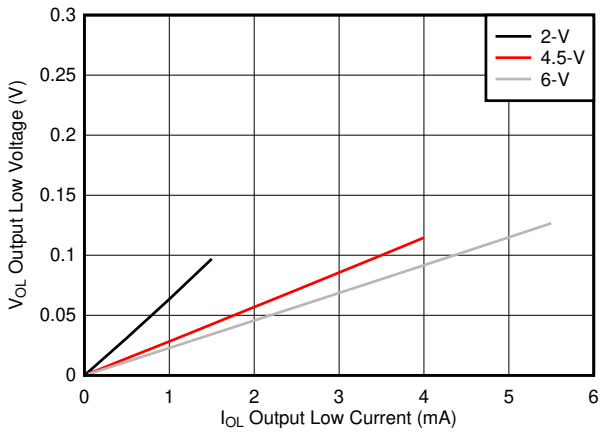

Figure 6-2. Typical output voltage in the low state (V_{OL})

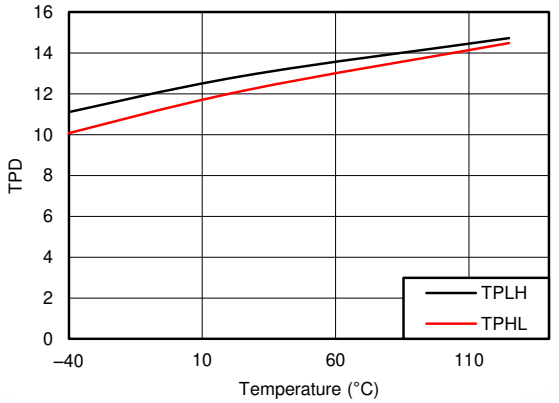

Figure 6-3. Typical propagation delay over temperature (V_{CC} = 5 V)

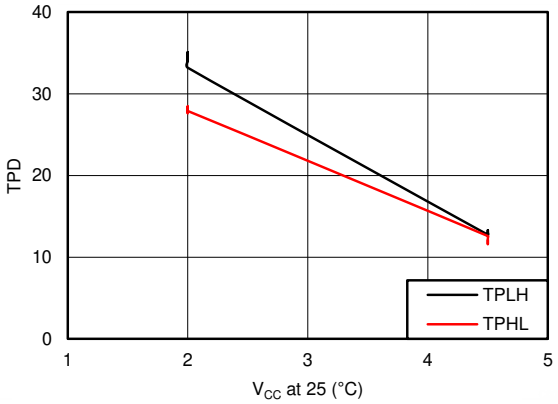

Figure 6-4. Typical propagation delay over supply

7 Parameter Measurement Information

- Phase relationships between waveforms were chosen arbitrarily. All input pulses are supplied by generators having the following characteristics: PRR ≤ 1 MHz, Z_O = 50 Ω, t_t < 6 ns.
- The outputs are measured one at a time, with one input transition per measurement.

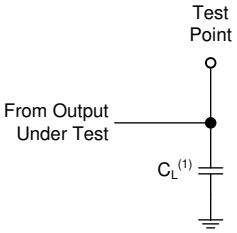

A. C_L= 50 pF and includes probe and jig capacitance.

Figure 7-1. Load Circuit

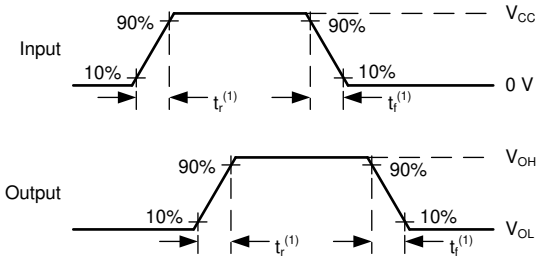

A. t_t is the greater of t_r and t_f.

Figure 7-2. Voltage Waveforms Transition Times

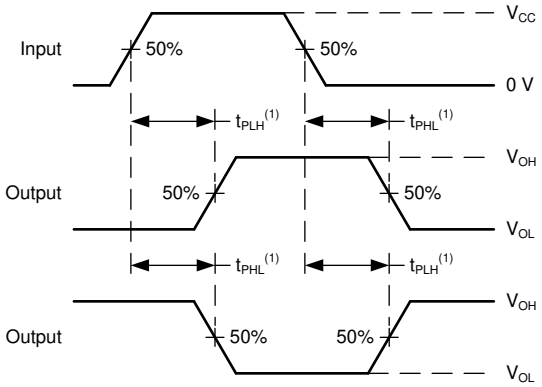

A. The maximum between t_{PLH} and t_{PHL} is used for t_{pd}.

Figure 7-3. Voltage Waveforms Propagation Delays

Copyright © 2021 Texas Instruments Incorporated

8 Detailed Description

8.1 Overview

This device contains six independent inverters. Each gate performs the Boolean function $Y = \overline{A}$ in positive logic.

8.2 Functional Block Diagram

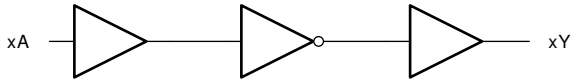

8.3 Feature Description

8.3.1 Balanced CMOS Push-Pull Outputs

A balanced output allows the device to sink and source similar currents. The drive capability of this device may create fast edges into light loads so routing and load conditions should be considered to prevent ringing. Additionally, the outputs of this device are capable of driving larger currents than the device can sustain without being damaged. It is important for the output power of the device to be limited to avoid damage due to over-current. The electrical and thermal limits defined in the *Absolute Maximum Ratings* must be followed at all times.

The SN74HC04 can drive a load with a total capacitance less than or equal to the maximum load listed in the *Switching Characteristics - 74* connected to a high-impedance CMOS input while still meeting all of the datasheet specifications. Larger capacitive loads can be applied, however it is not recommended to exceed the provided load value. If larger capacitive loads are required, it is recommended to add a series resistor between the output and the capacitor to limit output current to the values given in the *Absolute Maximum Ratings*.

8.3.2 Standard CMOS Inputs

Standard CMOS inputs are high impedance and are typically modeled as a resistor from the input to ground in parallel with the input capacitance given in the *Electrical Characteristics - 74*. The worst case resistance is calculated with the maximum input voltage, given in the *Absolute Maximum Ratings*, and the maximum input leakage current, given in the *Electrical Characteristics - 74*, using ohm's law (R = V ÷ I).

Signals applied to the inputs need to have fast edge rates, as defined by the input transition time in the *Recommended Operating Conditions* to avoid excessive current consumption and oscillations. If a slow or noisy input signal is required, a device with a Schmitt-trigger input should be used to condition the input signal prior to the standard CMOS input.

Copyright © 2021 Texas Instruments Incorporated

8.3.3 Clamp Diode Structure

The inputs and outputs to this device have both positive and negative clamping diodes as depicted in Figure 8-1.

CAUTION

Voltages beyond the values specified in the Absolute Maximum Ratings table can cause damage to the device. The recommended input and output voltage ratings may be exceeded if the input and output clamp-current ratings are observed.

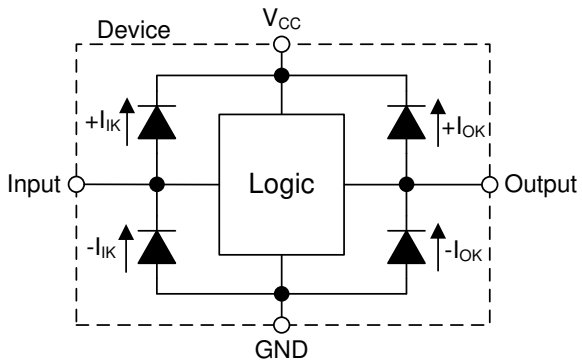

Figure 8-1. Electrical Placement of Clamping Diodes for Each Input and Output

8.4 Device Functional Modes

Table 8-1. Function Table

INPUT	OUTPUT
A	Y
L	H
H	L

Copyright © 2021 Texas Instruments Incorporated

9 Application and Implementation

Note

Information in the following applications sections is not part of the TI component specification, and TI does not warrant its accuracy or completeness. TI's customers are responsible for determining suitability of components for their purposes, as well as validating and testing their design implementation to confirm system functionality.

9.1 Application Information

This device can be used to add an additional stage to a counter with an external flip-flop. Because counters use a negative edge trigger, the flip-flop's clock input must be inverted to provide this function. This function only requires one of the six available inverters in the device, so the remaining channels can be used for other applications needing an inverted signal or improved signal integrity. Unused inputs must be terminated at V_{CC} or GND. Unused outputs can be left floating.

9.2 Typical Application

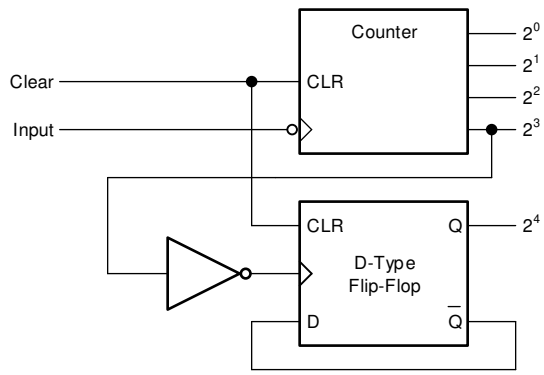

Figure 9-1. Typical application schematic

9.2.1 Design Requirements

9.2.1.1 Power Considerations

Ensure the desired supply voltage is within the range specified in the *Recommended Operating Conditions*. The supply voltage sets the device's electrical characteristics as described in the *Electrical Characteristics - 74*.

The supply must be capable of sourcing current equal to the total current to be sourced by all outputs of the SN74HC04 plus the maximum supply current, I_{CC}, listed in the *Electrical Characteristics - 74*. The logic device can only source or sink as much current as it is provided at the supply and ground pins, respectively. Be sure not to exceed the maximum total current through GND or V_{CC} listed in the *Absolute Maximum Ratings*.

Total power consumption can be calculated using the information provided in CMOS Power Consumption and C_{pd} Calculation.

Thermal increase can be calculated using the information provided in Thermal Characteristics of Standard Linear and Logic (SLL) Packages and Devices.

CAUTION

The maximum junction temperature, T_J(max) listed in the *Absolute Maximum Ratings*, is an *additional limitation* to prevent damage to the device. Do not violate any values listed in the *Absolute Maximum Ratings*. These limits are provided to prevent damage to the device.

9.2.1.2 Input Considerations

Unused inputs must be terminated to either V_{CC} or ground. These can be directly terminated if the input is completely unused, or they can be connected with a pull-up or pull-down resistor if the input is to be used sometimes, but not always. A pull-up resistor is used for a default state of HIGH, and a pull-down resistor is used for a default state of LOW. The resistor size is limited by drive current of the controller, leakage current into the SN74HC04, as specified in the *Electrical Characteristics - 74*, and the desired input transition rate. A 10-kΩ resistor value is often used due to these factors.

The SN74HC04 has standard CMOS inputs, so input signal edge rates cannot be slow. Slow input edge rates can cause oscillations and damaging shoot-through current. The recommended rates are defined in the *Recommended Operating Conditions*.

Refer to *Section 8.3* for additional information regarding the inputs for this device.

9.2.1.3 Output Considerations

The positive supply voltage is used to produce the output HIGH voltage. Drawing current from the output will decrease the output voltage as specified by the V_{OH} specification in the *Electrical Characteristics - 74*. Similarly, the ground voltage is used to produce the output LOW voltage. Sinking current into the output will increase the output voltage as specified by the V_{OL} specification in the *Electrical Characteristics - 74*.

Unused outputs can be left floating. Do not connect outputs directly to V_{CC} or ground.

Refer to *Section 8.3* for additional information regarding the outputs for this device.

9.2.2 Detailed Design Procedure

1. Add a decoupling capacitor from V_{CC} to GND. The capacitor needs to be placed physically close to the device and electrically close to both the V_{CC} and GND pins. An example layout is shown in *Section 11*.
2. Ensure the capacitive load at the output is ≤ 70 pF. This is not a hard limit, however it will ensure optimal performance. This can be accomplished by providing short, appropriately sized traces from the SN74HC04 to the receiving device.
3. Ensure the resistive load at the output is larger than (V_{CC} / I_O(max)) Ω. This will ensure that the maximum output current from the *Absolute Maximum Ratings* is not violated. Most CMOS inputs have a resistive load measured in megaohms; much larger than the minimum calculated above.
4. Thermal issues are rarely a concern for logic gates, however the power consumption and thermal increase can be calculated using the steps provided in the application report, CMOS Power Consumption and Cpd Calculation

9.2.3 Application Curves

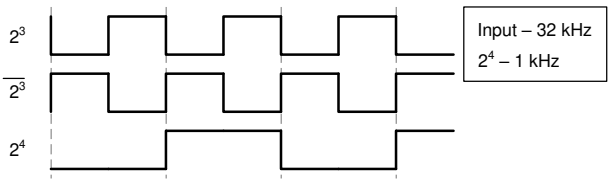

Figure 9-2. Typical application timing diagram

Copyright © 2021 Texas Instruments Incorporated

10 Power Supply Recommendations

The power supply can be any voltage between the minimum and maximum supply voltage rating located in the *Recommended Operating Conditions*. Each V_{CC} terminal should have a bypass capacitor to prevent power disturbance. A 0.1-µF capacitor is recommended for this device. It is acceptable to parallel multiple bypass caps to reject different frequencies of noise. The 0.1-µF and 1-µF capacitors are commonly used in parallel. The bypass capacitor should be installed as close to the power terminal as possible for best results, as shown in *Figure 11-1*.

11 Layout

11.1 Layout Guidelines

When using multiple-input and multiple-channel logic devices inputs must not ever be left floating. In many cases, functions or parts of functions of digital logic devices are unused; for example, when only two inputs of a triple-input AND gate are used. Such unused input pins must not be left unconnected because the undefined voltages at the outside connections result in undefined operational states. All unused inputs of digital logic devices must be connected to a logic high or logic low voltage, as defined by the input voltage specifications, to prevent them from floating. The logic level that must be applied to any particular unused input depends on the function of the device. Generally, the inputs are tied to GND or V_{CC}, whichever makes more sense for the logic function or is more convenient.

11.2 Layout Example

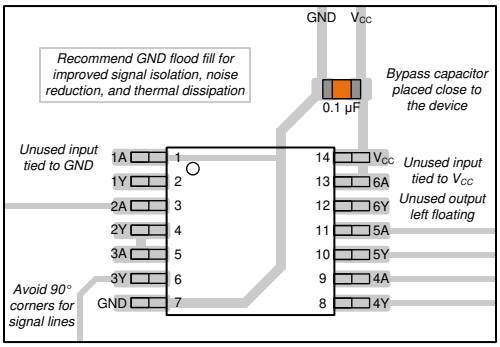

Figure 11-1. Example layout for the SN74HC04

12 Device and Documentation Support

12.1 Documentation Support

12.1.1 Related Documentation

For related documentation see the following:

- HCMOS Design Considerations
- CMOS Power Consumption and CPD Calculation
- Designing with Logic

12.2 Support Resources

TI E2E™ support forums are an engineer's go-to source for fast, verified answers and design help — straight from the experts. Search existing answers or ask your own question to get the quick design help you need.

Linked content is provided "AS IS" by the respective contributors. They do not constitute TI specifications and do not necessarily reflect TI's views; see TI's Terms of Use.

12.3 Trademarks

TI E2E™ is a trademark of Texas Instruments.
All trademarks are the property of their respective owners.

12.4 Electrostatic Discharge Caution

This integrated circuit can be damaged by ESD. Texas Instruments recommends that all integrated circuits be handled with appropriate precautions. Failure to observe proper handling and installation procedures can cause damage.

ESD damage can range from subtle performance degradation to complete device failure. Precision integrated circuits may be more susceptible to damage because very small parametric changes could cause the device not to meet its published specifications.

12.5 Glossary

TI Glossary	This glossary lists and explains terms, acronyms, and definitions.

13 Mechanical, Packaging, and Orderable Information

The following pages include mechanical, packaging, and orderable information. This information is the most current data available for the designated devices. This data is subject to change without notice and revision of this document. For browser-based versions of this data sheet, refer to the left-hand navigation.

Copyright © 2021 Texas Instruments Incorporated

PACKAGING INFORMATION

Orderable Device	Status (1)	Package Type	Package Drawing	Pins	Package Qty	Eco Plan (2)	Lead finish/ Ball material (6)	MSL Peak Temp (3)	Op Temp (°C)	Device Marking (4/5)	Samples
5962-8409801VCA	ACTIVE	CDIP	J	14	25	Non-RoHS & Green	SNPB	N / A for Pkg Type	-55 to 125	5962-8409801VC A SNV54HC04J	Samples
5962-8409801VDA	ACTIVE	CFP	W	14	25	Non-RoHS & Green	SNPB	N / A for Pkg Type	-55 to 125	5962-8409801VD A SNV54HC04W	Samples
84098012A	ACTIVE	LCCC	FK	20	55	Non-RoHS & Green	SNPB	N / A for Pkg Type	-55 to 125	84098012A SNJ54HC 04FK	Samples
8409801CA	ACTIVE	CDIP	J	14	25	Non-RoHS & Green	SNPB	N / A for Pkg Type	-55 to 125	8409801CA SNJ54HC04J	Samples
8409801DA	ACTIVE	CFP	W	14	25	Non-RoHS & Green	SNPB	N / A for Pkg Type	-55 to 125	8409801DA SNJ54HC04W	Samples
JM38510/65701B2A	ACTIVE	LCCC	FK	20	55	Non-RoHS & Green	SNPB	N / A for Pkg Type	-55 to 125	JM38510/ 65701B2A	Samples
JM38510/65701BCA	ACTIVE	CDIP	J	14	25	Non-RoHS & Green	SNPB	N / A for Pkg Type	-55 to 125	JM38510/ 65701BCA	Samples
M38510/65701B2A	ACTIVE	LCCC	FK	20	55	Non-RoHS & Green	SNPB	N / A for Pkg Type	-55 to 125	JM38510/ 65701B2A	Samples
M38510/65701BCA	ACTIVE	CDIP	J	14	25	Non-RoHS & Green	SNPB	N / A for Pkg Type	-55 to 125	JM38510/ 65701BCA	Samples
SN54HC04J	ACTIVE	CDIP	J	14	25	Non-RoHS & Green	SNPB	N / A for Pkg Type	-55 to 125	SN54HC04J	Samples
SN74HC04D	OBSOLETE	SOIC	D	14		TBD	Call TI	Call TI	-40 to 85	HC04	
SN74HC04DBR	ACTIVE	SSOP	DB	14	2000	RoHS & Green	NIPDAU	Level-1-260C-UNLIM	-40 to 85	HC04	Samples
SN74HC04DBRE4	ACTIVE	SSOP	DB	14	2000	RoHS & Green	NIPDAU	Level-1-260C-UNLIM	-40 to 85	HC04	Samples
SN74HC04DBRG4	ACTIVE	SSOP	DB	14	2000	RoHS & Green	NIPDAU	Level-1-260C-UNLIM	-40 to 85	HC04	Samples
SN74HC04DR	ACTIVE	SOIC	D	14	2500	RoHS & Green	NIPDAU | SN	Level-1-260C-UNLIM	-40 to 85	HC04	Samples
SN74HC04DRG3	ACTIVE	SOIC	D	14	2500	RoHS & Green	SN	Level-1-260C-UNLIM	-40 to 85	HC04	Samples
SN74HC04DRG4	ACTIVE	SOIC	D	14	2500	RoHS & Green	NIPDAU	Level-1-260C-UNLIM	-40 to 85	HC04	Samples

Orderable Device	Status (1)	Package Type	Package Drawing	Pins	Package Qty	Eco Plan (2)	Lead finish/ Ball material (6)	MSL Peak Temp (3)	Op Temp (°C)	Device Marking (4/5)	Samples
SN74HC04DT	OBSOLETE	SOIC	D	14		TBD	Call TI	Call TI	-40 to 85	HC04	
SN74HC04N	ACTIVE	PDIP	N	14	25	RoHS & Green	NIPDAU	N / A for Pkg Type	-40 to 85	SN74HC04N	Samples
SN74HC04NE4	ACTIVE	PDIP	N	14	25	RoHS & Green	NIPDAU	N / A for Pkg Type	-40 to 85	SN74HC04N	Samples
SN74HC04NSR	ACTIVE	SO	NS	14	2000	RoHS & Green	NIPDAU	Level-1-260C-UNLIM	-40 to 85	HC04	Samples
SN74HC04NSRG4	ACTIVE	SO	NS	14	2000	RoHS & Green	NIPDAU	Level-1-260C-UNLIM	-40 to 85	HC04	Samples
SN74HC04PW	OBSOLETE	TSSOP	PW	14		TBD	Call TI	Call TI	-40 to 85	HC04	
SN74HC04PWR	ACTIVE	TSSOP	PW	14	2000	RoHS & Green	NIPDAU | SN	Level-1-260C-UNLIM	-40 to 85	HC04	Samples
SN74HC04PWRG4	ACTIVE	TSSOP	PW	14	2000	RoHS & Green	NIPDAU	Level-1-260C-UNLIM	-40 to 85	HC04	Samples
SN74HC04PWT	OBSOLETE	TSSOP	PW	14		TBD	Call TI	Call TI	-40 to 85	HC04	
SNJ54HC04FK	ACTIVE	LCCC	FK	20	55	Non-RoHS & Green	SNPB	N / A for Pkg Type	-55 to 125	84098012A SNJ54HC 04FK	Samples
SNJ54HC04J	ACTIVE	CDIP	J	14	25	Non-RoHS & Green	SNPB	N / A for Pkg Type	-55 to 125	8409801CA SNJ54HC04J	Samples
SNJ54HC04W	ACTIVE	CFP	W	14	25	Non-RoHS & Green	SNPB	N / A for Pkg Type	-55 to 125	8409801DA SNJ54HC04W	Samples

(1) The marketing status values are defined as follows:
ACTIVE: Product device recommended for new designs.
LIFEBUY: TI has announced that the device will be discontinued, and a lifetime-buy period is in effect.
NRND: Not recommended for new designs. Device is in production to support existing customers, but TI does not recommend using this part in a new design.
PREVIEW: Device has been announced but is not in production. Samples may or may not be available.
OBSOLETE: TI has discontinued the production of the device.

(2) **RoHS:** TI defines "RoHS" to mean semiconductor products that are compliant with the current EU RoHS requirements for all 10 RoHS substances, including the requirement that RoHS substance do not exceed 0.1% by weight in homogeneous materials. Where designed to be soldered at high temperatures, "RoHS" products are suitable for use in specified lead-free processes. TI may reference these types of products as "Pb-Free".
RoHS Exempt: TI defines "RoHS Exempt" to mean products that contain lead but are compliant with EU RoHS pursuant to a specific EU RoHS exemption.
Green: TI defines "Green" to mean the content of Chlorine (Cl) and Bromine (Br) based flame retardants meet JS709B low halogen requirements of <=1000ppm threshold. Antimony trioxide based flame retardants must also meet the <=1000ppm threshold requirement.

(3) MSL, Peak Temp. - The Moisture Sensitivity Level rating according to the JEDEC industry standard classifications, and peak solder temperature.

(4) There may be additional marking, which relates to the logo, the lot trace code information, or the environmental category on the device.

(5) Multiple Device Markings will be inside parentheses. Only one Device Marking contained in parentheses and separated by a "~" will appear on a device. If a line is indented then it is a continuation of the previous line and the two combined represent the entire Device Marking for that device.

(6) Lead finish/Ball material - Orderable Devices may have multiple material finish options. Finish options are separated by a vertical ruled line. Lead finish/Ball material values may wrap to two lines if the finish value exceeds the maximum column width.

Important Information and Disclaimer: The information provided on this page represents TI's knowledge and belief as of the date that it is provided. TI bases its knowledge and belief on information provided by third parties, and makes no representation or warranty as to the accuracy of such information. Efforts are underway to better integrate information from third parties. TI has taken and continues to take reasonable steps to provide representative and accurate information but may not have conducted destructive testing or chemical analysis on incoming materials and chemicals. TI and TI suppliers consider certain information to be proprietary, and thus CAS numbers and other limited information may not be available for release.

In no event shall TI's liability arising out of such information exceed the total purchase price of the TI part(s) at issue in this document sold by TI to Customer on an annual basis.

OTHER QUALIFIED VERSIONS OF SN54HC04, SN54HC04-SP, SN74HC04 :

- Catalog : SN74HC04, SN54HC04
- Automotive : SN74HC04-Q1, SN74HC04-Q1
- Military : SN54HC04
- Space : SN54HC04-SP

NOTE: Qualified Version Definitions:

- Catalog - TI's standard catalog product
- Automotive - Q100 devices qualified for high-reliability automotive applications targeting zero defects
- Military - QML certified for Military and Defense Applications
- Space - Radiation tolerant, ceramic packaging and qualified for use in Space-based application

TAPE AND REEL INFORMATION

REEL DIMENSIONS

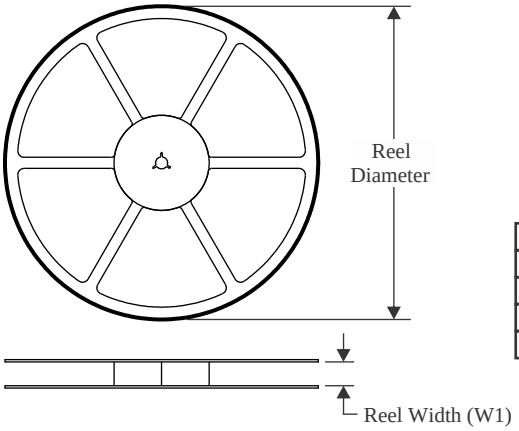

TAPE DIMENSIONS

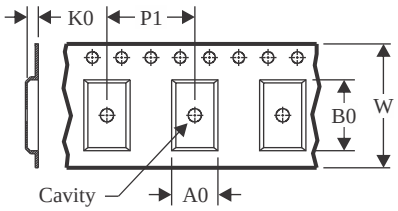

A0	Dimension designed to accommodate the component width
B0	Dimension designed to accommodate the component length
K0	Dimension designed to accommodate the component thickness
W	Overall width of the carrier tape
P1	Pitch between successive cavity centers

QUADRANT ASSIGNMENTS FOR PIN 1 ORIENTATION IN TAPE

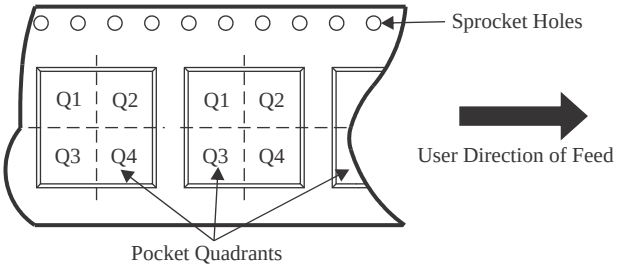

*All dimensions are nominal

Device	Package Type	Package Drawing	Pins	SPQ	Reel Diameter (mm)	Reel Width W1 (mm)	A0 (mm)	B0 (mm)	K0 (mm)	P1 (mm)	W (mm)	Pin1 Quadrant
SN74HC04DBR	SSOP	DB	14	2000	330.0	16.4	8.35	6.6	2.4	12.0	16.0	Q1
SN74HC04DR	SOIC	D	14	2500	330.0	16.4	6.5	9.0	2.1	8.0	16.0	Q1
SN74HC04DRG3	SOIC	D	14	2500	330.0	16.4	6.6	9.3	2.1	8.0	16.0	Q1
SN74HC04DRG4	SOIC	D	14	2500	330.0	16.4	6.5	9.0	2.1	8.0	16.0	Q1
SN74HC04NSR	SO	NS	14	2000	330.0	16.4	8.45	10.55	2.5	12.0	16.2	Q1
SN74HC04PWR	TSSOP	PW	14	2000	330.0	12.4	6.9	5.6	1.6	8.0	12.0	Q1
SN74HC04PWRG4	TSSOP	PW	14	2000	330.0	12.4	6.9	5.6	1.6	8.0	12.0	Q1

TAPE AND REEL BOX DIMENSIONS

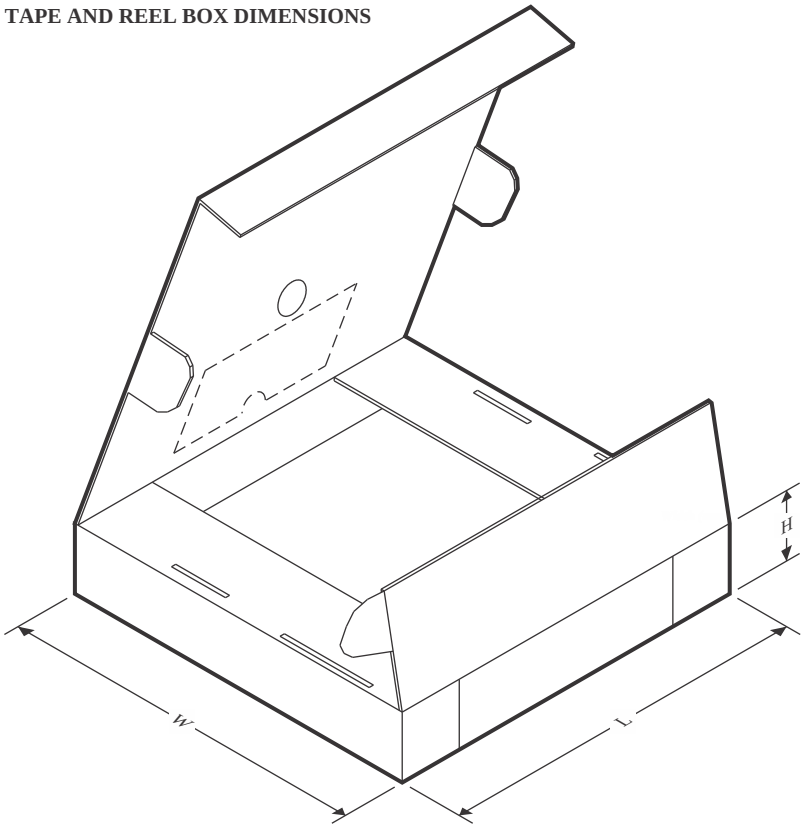

*All dimensions are nominal

Device	Package Type	Package Drawing	Pins	SPQ	Length (mm)	Width (mm)	Height (mm)
SN74HC04DBR	SSOP	DB	14	2000	356.0	356.0	35.0
SN74HC04DR	SOIC	D	14	2500	367.0	367.0	38.0
SN74HC04DRG3	SOIC	D	14	2500	366.0	364.0	50.0
SN74HC04DRG4	SOIC	D	14	2500	367.0	367.0	38.0
SN74HC04NSR	SO	NS	14	2000	356.0	356.0	35.0
SN74HC04PWR	TSSOP	PW	14	2000	356.0	356.0	35.0
SN74HC04PWRG4	TSSOP	PW	14	2000	356.0	356.0	35.0

TUBE

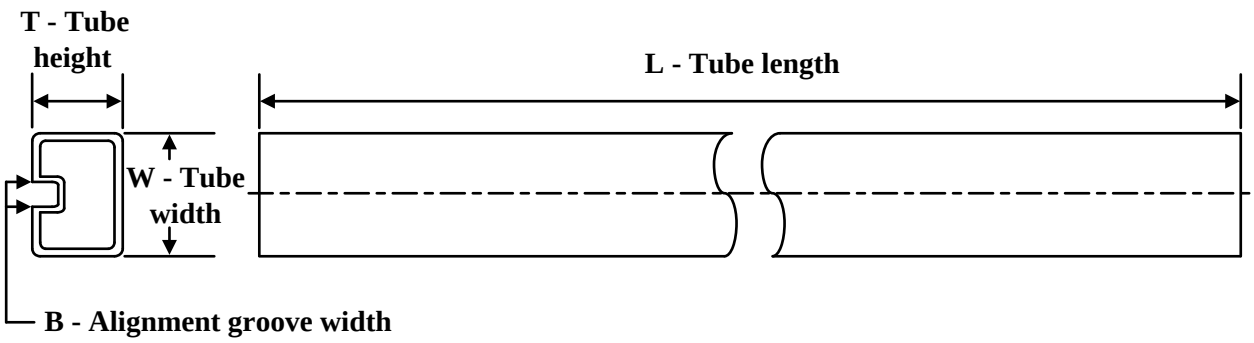

*All dimensions are nominal

Device	Package Name	Package Type	Pins	SPQ	L (mm)	W (mm)	T (µm)	B (mm)
5962-8409801VDA	W	CFP	14	25	506.98	26.16	6220	NA
84098012A	FK	LCCC	20	55	506.98	12.06	2030	NA
8409801DA	W	CFP	14	25	506.98	26.16	6220	NA
SN74HC04N	N	PDIP	14	25	506	13.97	11230	4.32
SN74HC04N	N	PDIP	14	25	506	13.97	11230	4.32
SN74HC04NE4	N	PDIP	14	25	506	13.97	11230	4.32
SN74HC04NE4	N	PDIP	14	25	506	13.97	11230	4.32
SNJ54HC04FK	FK	LCCC	20	55	506.98	12.06	2030	NA
SNJ54HC04W	W	CFP	14	25	506.98	26.16	6220	NA

MECHANICAL DATA

NS (R-PDSO-G)** **PLASTIC SMALL-OUTLINE PACKAGE**

14-PINS SHOWN

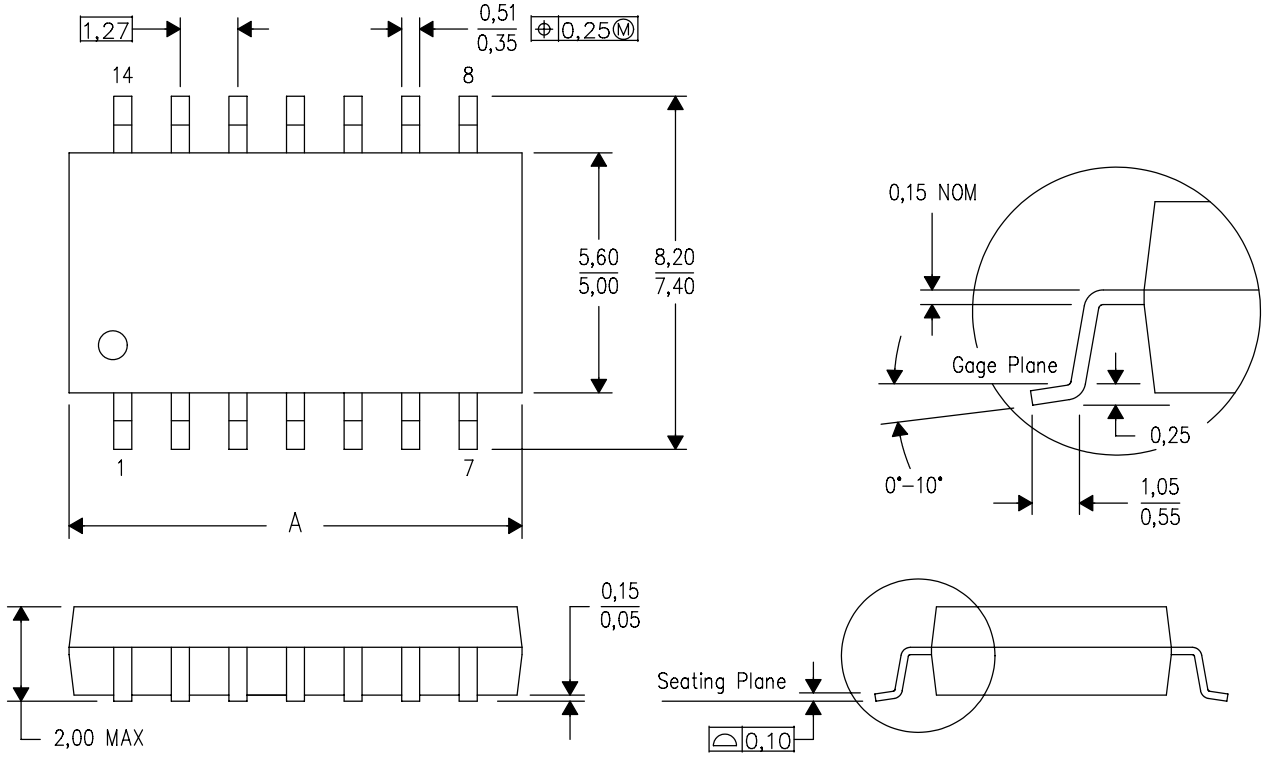

DIM \ PINS **	14	16	20	24
A MAX	10,50	10,50	12,90	15,30
A MIN	9,90	9,90	12,30	14,70

4040062/C 03/03

NOTES:
A. All linear dimensions are in millimeters.
B. This drawing is subject to change without notice.
C. Body dimensions do not include mold flash or protrusion, not to exceed 0,15.

W (R–GDFP–F14) CERAMIC DUAL FLATPACK

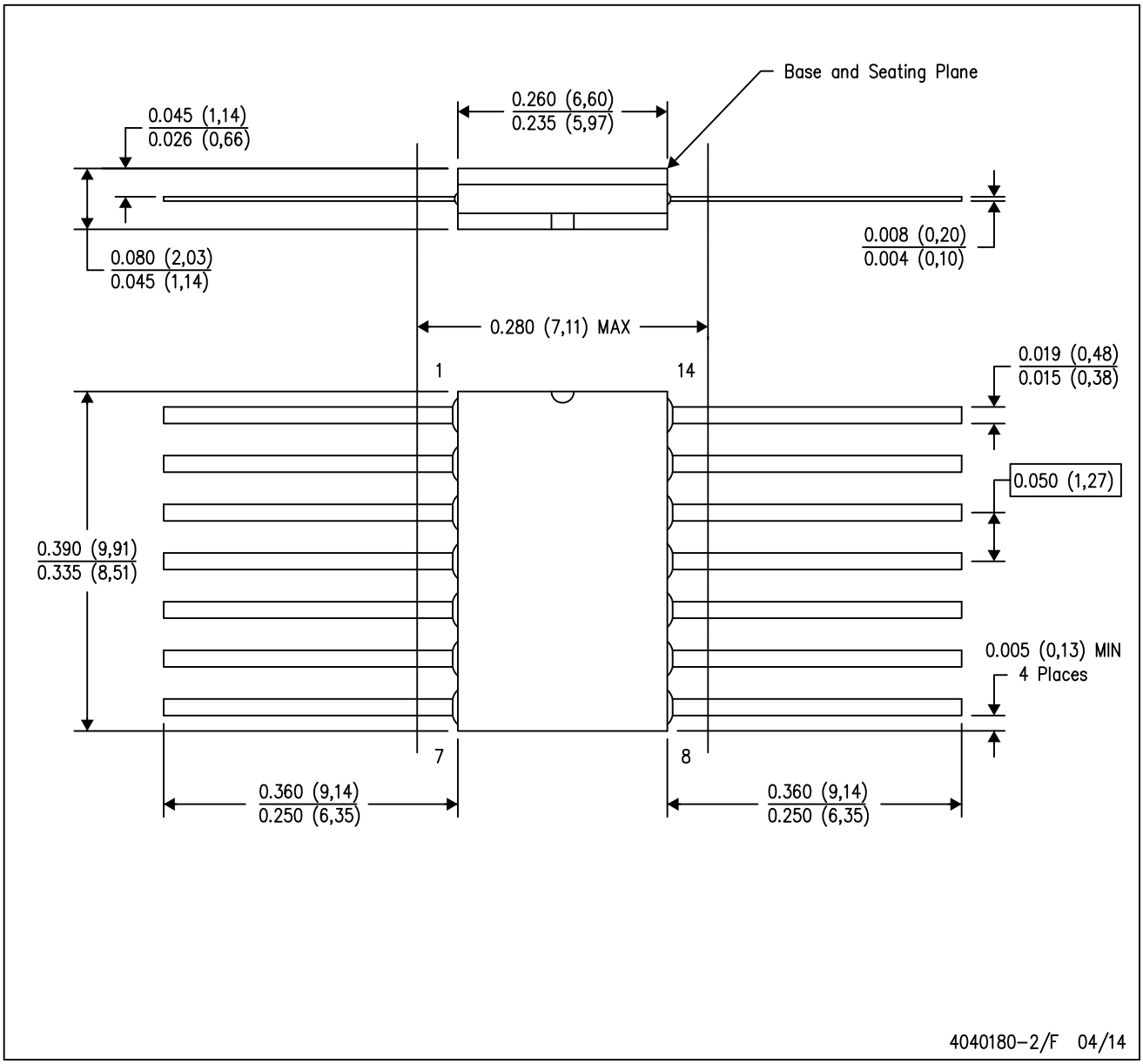

NOTES:
A. All linear dimensions are in inches (millimeters).
B. This drawing is subject to change without notice.
C. This package can be hermetically sealed with a ceramic lid using glass frit.
D. Index point is provided on cap for terminal identification only.
E. Falls within MIL STD 1835 GDFP1–F14

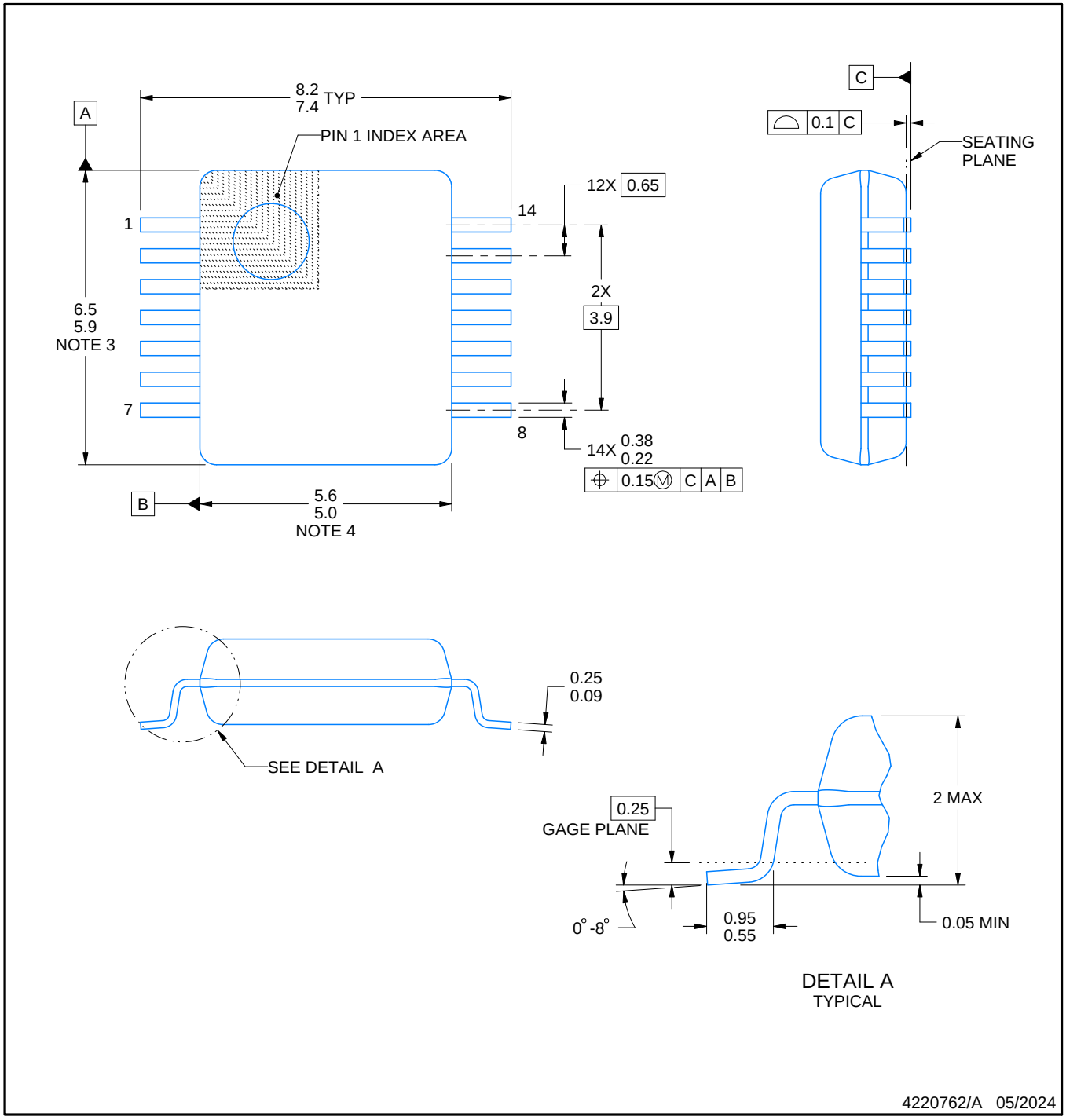

NOTES:

1. All linear dimensions are in millimeters. Any dimensions in parenthesis are for reference only. Dimensioning and tolerancing per ASME Y14.5M.
2. This drawing is subject to change without notice.
3. This dimension does not include mold flash, protrusions, or gate burrs. Mold flash, protrusions, or gate burrs shall not exceed 0.15 mm per side.
4. Reference JEDEC registration MO-150.

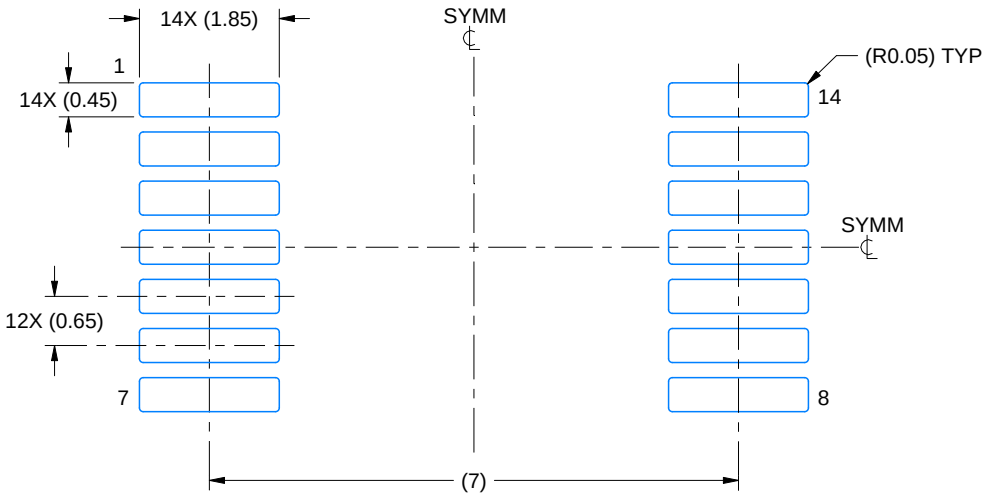

LAND PATTERN EXAMPLE
EXPOSED METAL SHOWN
SCALE: 10X

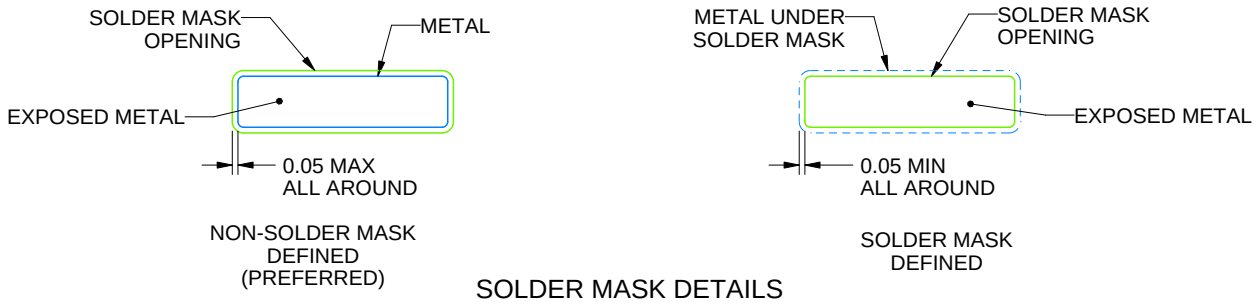

SOLDER MASK DETAILS

4220762/A 05/2024

NOTES: (continued)

5. Publication IPC-7351 may have alternate designs.
6. Solder mask tolerances between and around signal pads can vary based on board fabrication site.

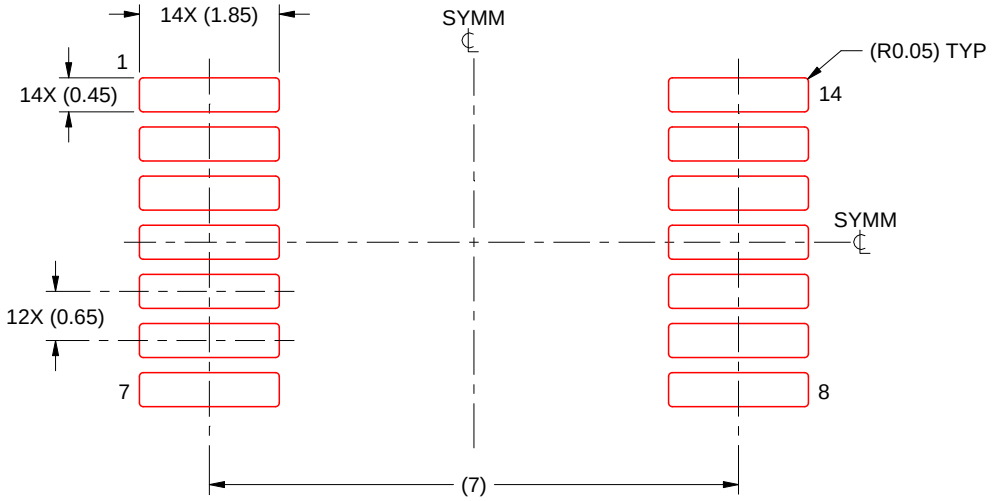

SOLDER PASTE EXAMPLE
BASED ON 0.125 mm THICK STENCIL
SCALE: 10X

4220762/A 05/2024

NOTES: (continued)

7. Laser cutting apertures with trapezoidal walls and rounded corners may offer better paste release. IPC-7525 may have alternate design recommendations.
8. Board assembly site may have different recommendations for stencil design.

GENERIC PACKAGE VIEW

FK 20

LCCC - 2.03 mm max height

8.89 x 8.89, 1.27 mm pitch

LEADLESS CERAMIC CHIP CARRIER

This image is a representation of the package family, actual package may vary.
Refer to the product data sheet for package details.

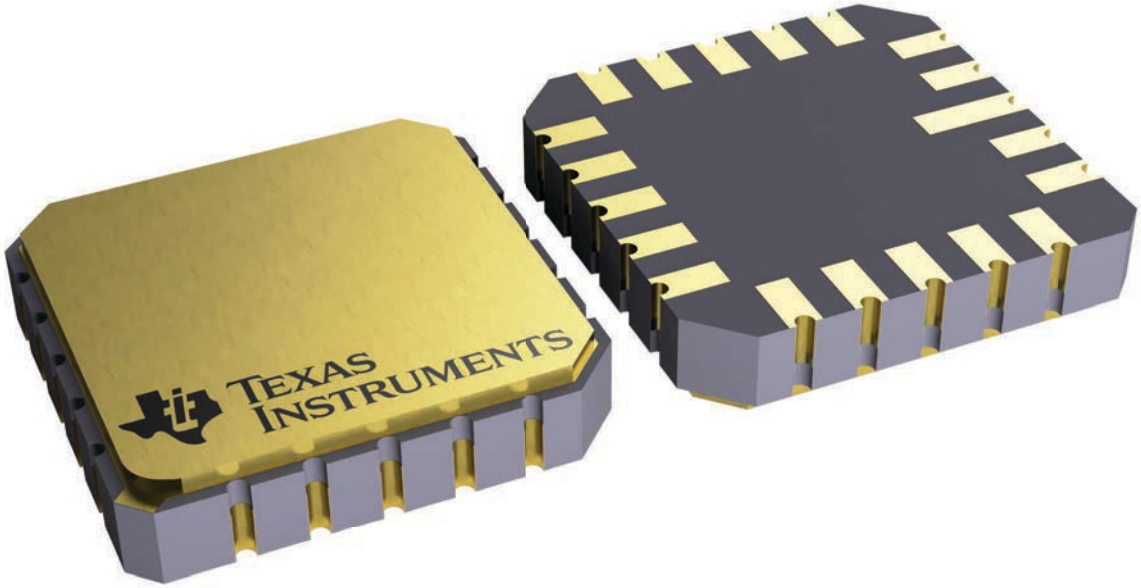

4229370VA\

J 14 CDIP - 5.08 mm max height

CERAMIC DUAL IN LINE PACKAGE

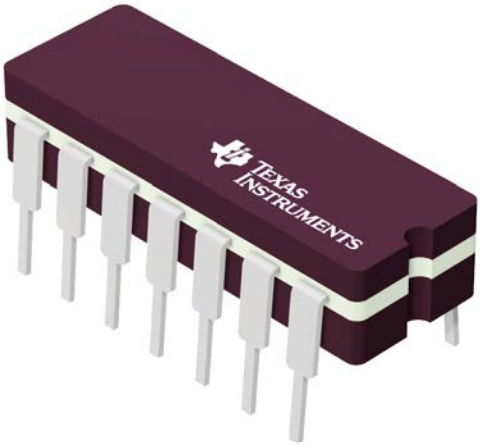

Images above are just a representation of the package family, actual package may vary.
Refer to the product data sheet for package details.

4040083-5/G

PACKAGE OUTLINE

J0014A

CDIP - 5.08 mm max height

CERAMIC DUAL IN LINE PACKAGE

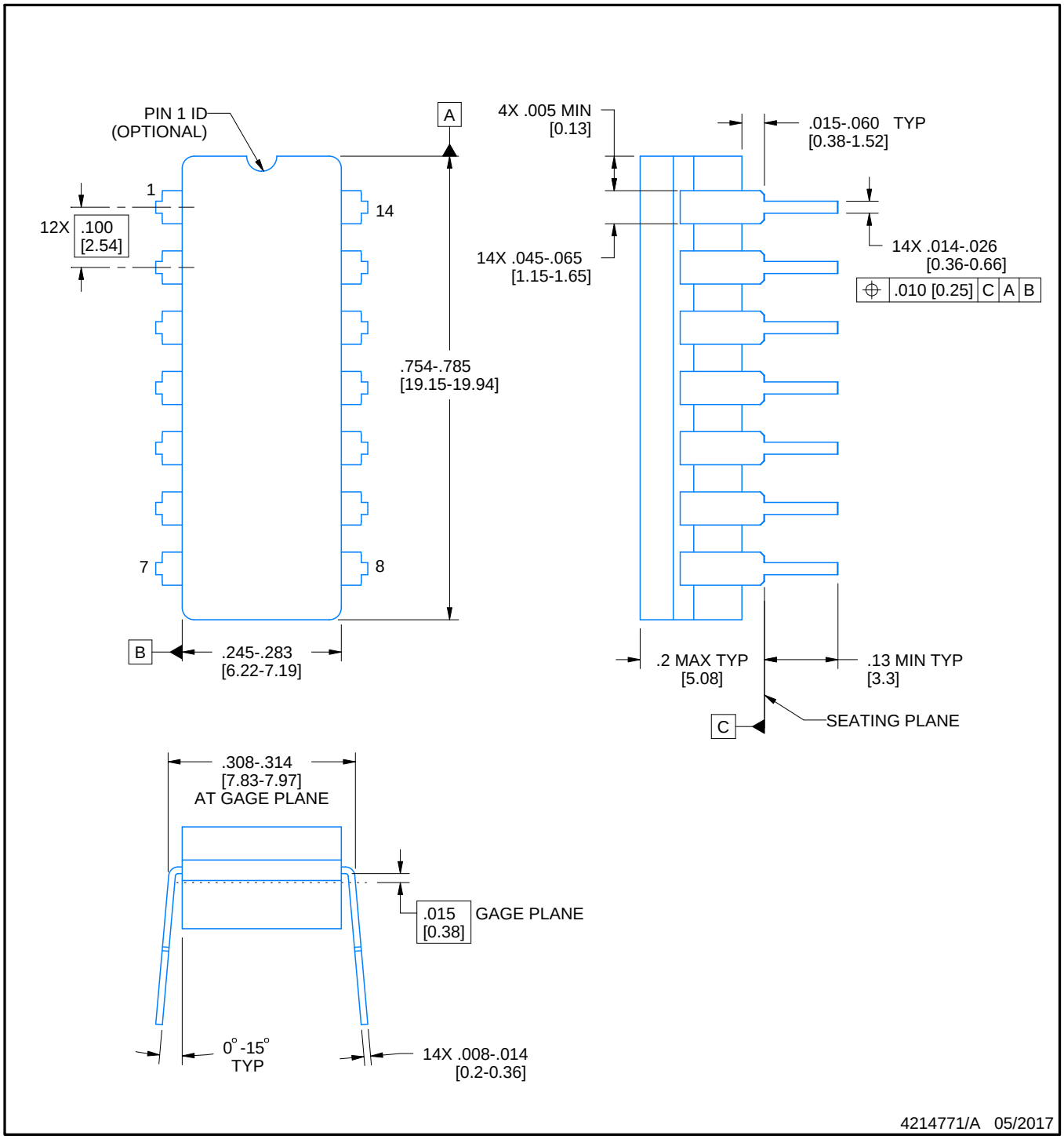

NOTES:

1. All controlling linear dimensions are in inches. Dimensions in brackets are in millimeters. Any dimension in brackets or parenthesis are for reference only. Dimensioning and tolerancing per ASME Y14.5M.
2. This drawing is subject to change without notice.
3. This package is hermitically sealed with a ceramic lid using glass frit.
4. Index point is provided on cap for terminal identification only and on press ceramic glass frit seal only.
5. Falls within MIL-STD-1835 and GDIP1-T14.

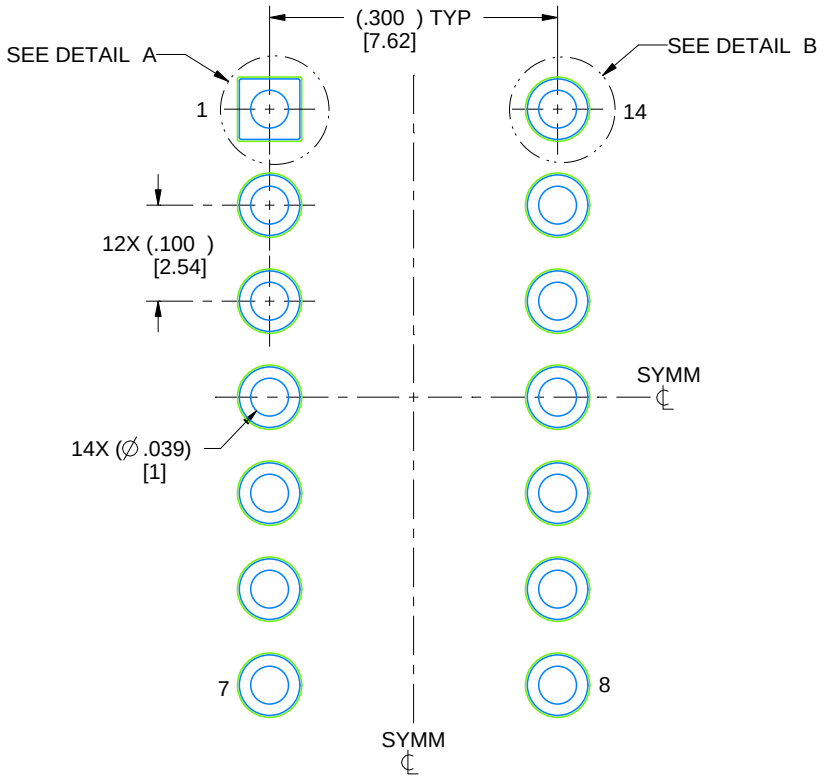

LAND PATTERN EXAMPLE
NON-SOLDER MASK DEFINED
SCALE: 5X

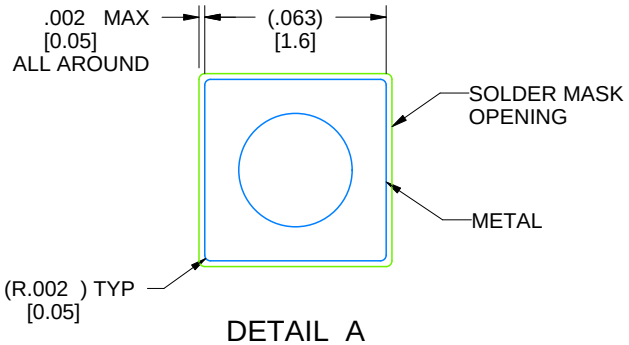

DETAIL A
SCALE: 15X

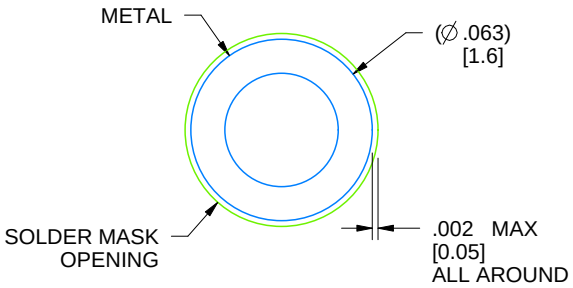

DETAIL B
13X, SCALE: 15X

4214771/A 05/2017

D (R–PDSO–G14) PLASTIC SMALL OUTLINE

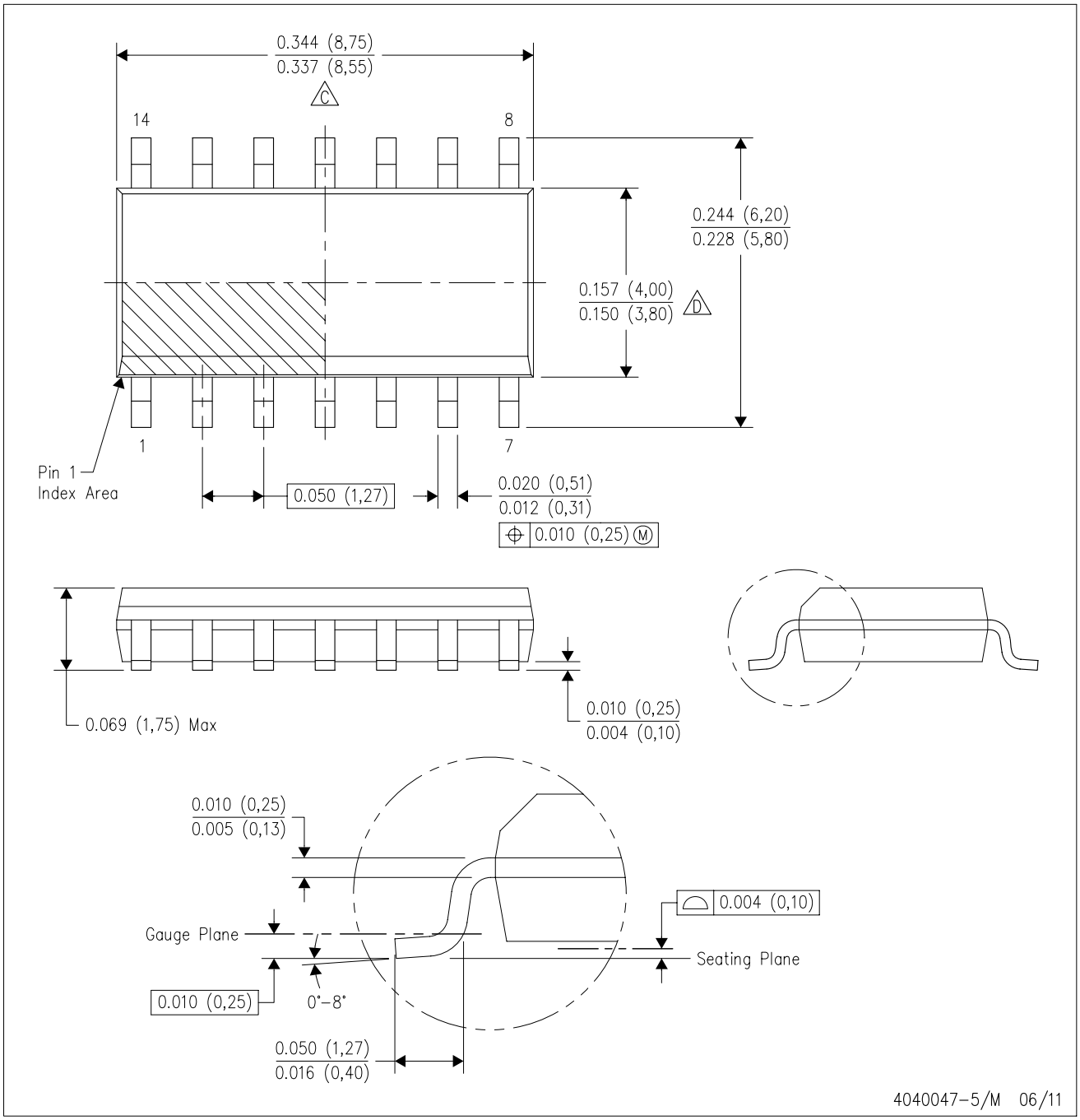

NOTES:
A. All linear dimensions are in inches (millimeters).
B. This drawing is subject to change without notice.
C. Body length does not include mold flash, protrusions, or gate burrs. Mold flash, protrusions, or gate burrs shall not exceed 0.006 (0,15) each side.
D. Body width does not include interlead flash. Interlead flash shall not exceed 0.017 (0,43) each side.
E. Reference JEDEC MS–012 variation AB.

PW (R–PDSO–G14) PLASTIC SMALL OUTLINE

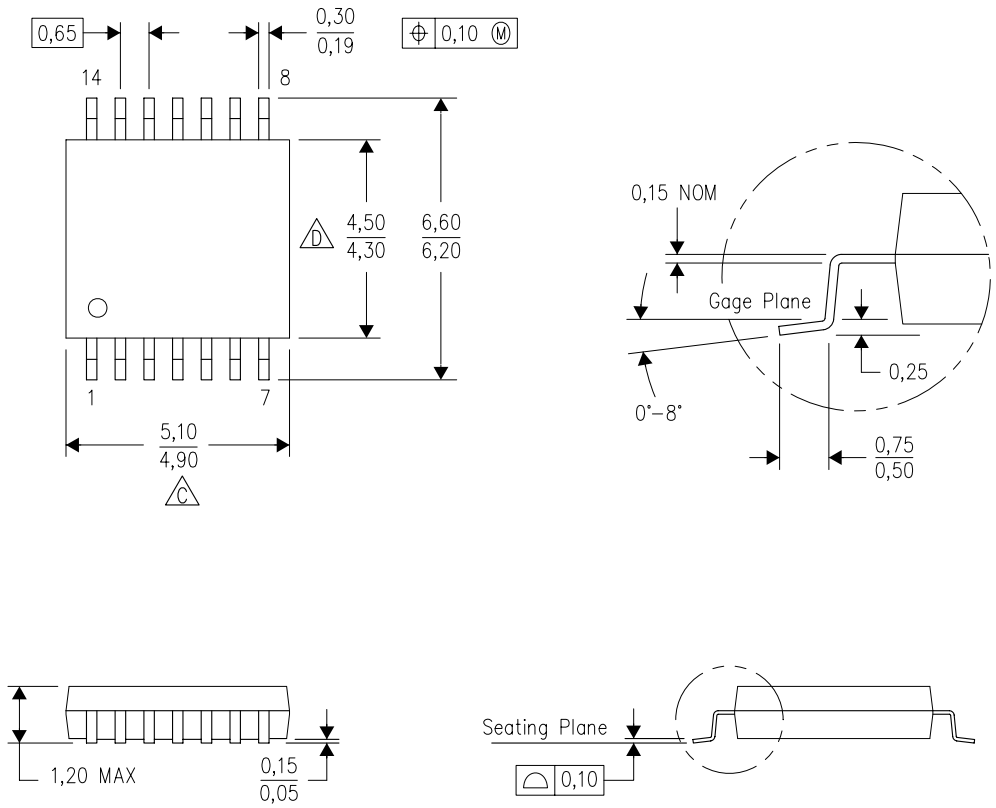

NOTES:
A. All linear dimensions are in millimeters. Dimensioning and tolerancing per ASME Y14.5M–1994.
B. This drawing is subject to change without notice.
C. Body length does not include mold flash, protrusions, or gate burrs. Mold flash, protrusions, or gate burrs shall not exceed 0,15 each side.
D. Body width does not include interlead flash. Interlead flash shall not exceed 0,25 each side.
E. Falls within JEDEC MO–153

N (R–PDIP–T**) PLASTIC DUAL–IN–LINE PACKAGE

16 PINS SHOWN

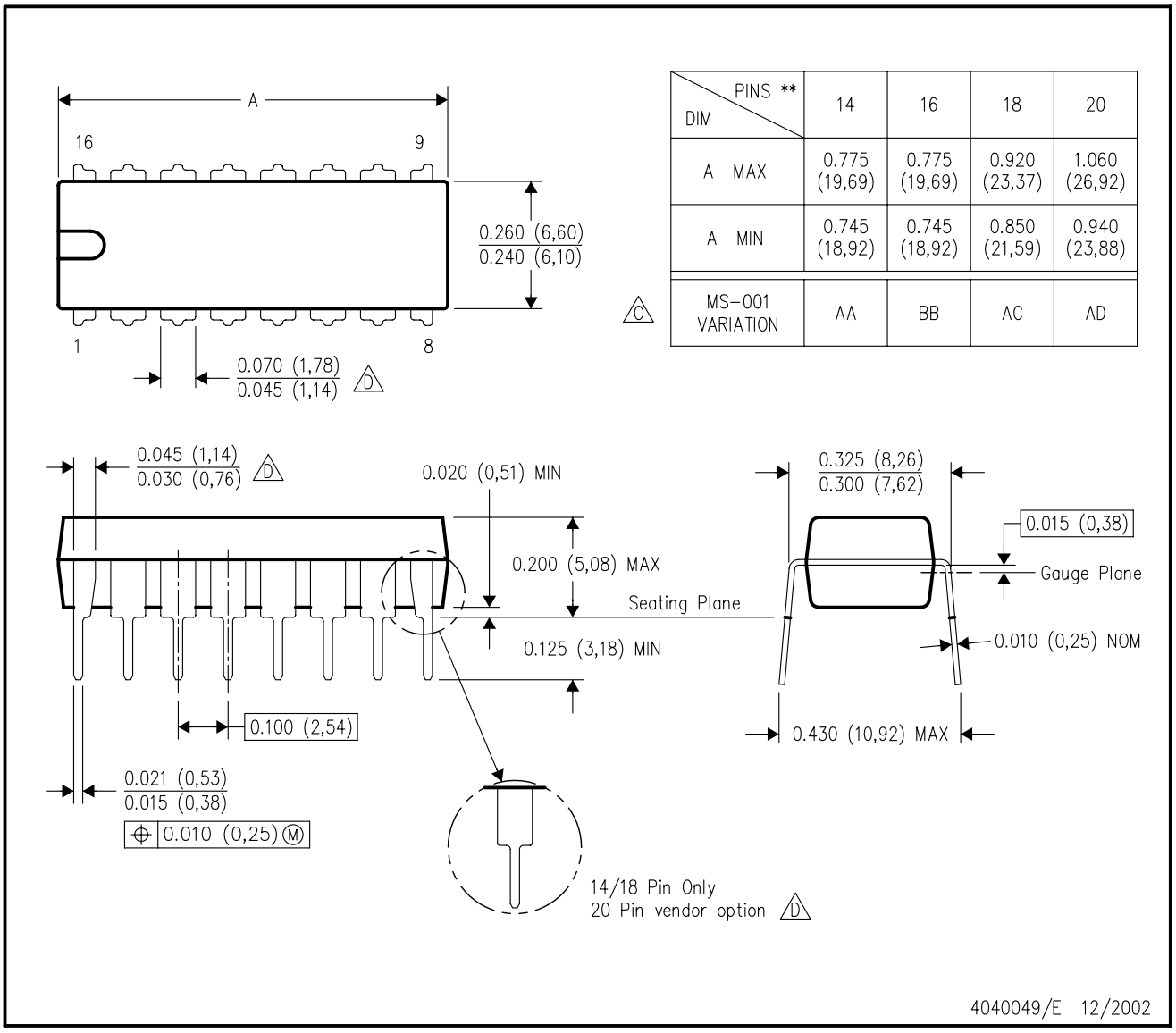

DIM \ PINS **	14	16	18	20
A MAX	0.775 (19,69)	0.775 (19,69)	0.920 (23,37)	1.060 (26,92)
A MIN	0.745 (18,92)	0.745 (18,92)	0.850 (21,59)	0.940 (23,88)
MS–001 VARIATION (C)	AA	BB	AC	AD

NOTES:
A. All linear dimensions are in inches (millimeters).
B. This drawing is subject to change without notice.
C. Falls within JEDEC MS–001, except 18 and 20 pin minimum body length (Dim A).
D. The 20 pin end lead shoulder width is a vendor option, either half or full width.

IMPORTANT NOTICE AND DISCLAIMER

TI PROVIDES TECHNICAL AND RELIABILITY DATA (INCLUDING DATA SHEETS), DESIGN RESOURCES (INCLUDING REFERENCE DESIGNS), APPLICATION OR OTHER DESIGN ADVICE, WEB TOOLS, SAFETY INFORMATION, AND OTHER RESOURCES “AS IS” AND WITH ALL FAULTS, AND DISCLAIMS ALL WARRANTIES, EXPRESS AND IMPLIED, INCLUDING WITHOUT LIMITATION ANY IMPLIED WARRANTIES OF MERCHANTABILITY, FITNESS FOR A PARTICULAR PURPOSE OR NON-INFRINGEMENT OF THIRD PARTY INTELLECTUAL PROPERTY RIGHTS.

These resources are intended for skilled developers designing with TI products. You are solely responsible for (1) selecting the appropriate TI products for your application, (2) designing, validating and testing your application, and (3) ensuring your application meets applicable standards, and any other safety, security, regulatory or other requirements.

These resources are subject to change without notice. TI grants you permission to use these resources only for development of an application that uses the TI products described in the resource. Other reproduction and display of these resources is prohibited. No license is granted to any other TI intellectual property right or to any third party intellectual property right. TI disclaims responsibility for, and you will fully indemnify TI and its representatives against, any claims, damages, costs, losses, and liabilities arising out of your use of these resources.

TI’s products are provided subject to TI’s Terms of Sale or other applicable terms available either on ti.com or provided in conjunction with such TI products. TI’s provision of these resources does not expand or otherwise alter TI’s applicable warranties or warranty disclaimers for TI products.

TI objects to and rejects any additional or different terms you may have proposed.

Mailing Address: Texas Instruments, Post Office Box 655303, Dallas, Texas 75265
Copyright © 2024, Texas Instruments Incorporated