CLRC663

Contactless reader IC

Rev. 3.4 — 17 July 2012
171134

Product data sheet
COMPANY PUBLIC

1. Introduction

This document describes the functionality and electrical specifications of the contactless reader/writer IC CLRC663.

2. General description

The CLRC663 is a highly integrated transceiver IC for contactless communication at 13.56 MHz.

The CLRC663 transceiver IC supports the following operating modes

- Read/write mode supporting ISO/IEC 14443A/MIFARE
- Read/write mode supporting ISO/IEC 14443B
- Read/write mode supporting JIS X 6319-4 (comparable with FeliCa[1] (see Section 21.5 scheme)
- Passive initiator mode according to ISO/IEC 18092
- Read/write mode supporting ISO/IEC 15693
- Read/write mode supporting ICODE EPC UID/ EPC OTP
- Read/write mode supporting ISO/IEC 18000-3 mode 3/ EPC Class-1 HF

The CLRC663's internal transmitter is able to drive a reader/writer antenna designed to communicate with ISO/IEC 14443A/MIFARE cards and transponders without additional active circuitry. The digital module manages the complete ISO/IEC 14443A framing and error detection functionality (parity and CRC).

The CLRC663 supports MIFARE Classic 1K, MIFARE Classic 4K, MIFARE Ultralight, MIFARE Ultralight C, MIFARE PLUS and MIFARE DESFire products. The CLRC663 supports MIFARE higher transfer speeds of up to 848 kbit/s in both directions.

The CLRC663 supports layer 2 and 3 of the ISO/IEC 14443B reader/writer communication scheme except anticollision. The anticollision needs to be implemented in the firmware of the host controller as well as in the upper layers.

The CLRC663 is able to demodulate and decode FeliCa coded signals.The FeliCa receiver part provides the demodulation and decoding circuitry for FeliCa coded signals. The CLRC663 handles the FeliCa framing and error detection such as CRC. The CLRC663 supports FeliCa higher transfer speeds of up to 424 kbit/s in both directions.

1. In the following the word FeliCa is used for JIS X 6319-4

The CLRC663 is supporting the P2P passive initiator mode in accordance with ISO/IEC 18092.

The CLRC663 supports the vicinity protocol according to ISO/IEC15693, EPC UID and ISO/IEC 18000-3 mode 3/ EPC Class-1 HF.

The following host interfaces are supported:

- Serial Peripheral Interface (SPI)
- Serial UART (similar to RS232 with voltage levels dependent on pin voltage supply)
- I^2C-bus interface (two versions are implemented: I2C and I2CL)

The CLRC663 supports the connection of a secure access module (SAM). A dedicated separate I2C interface is implemented for a connection of the SAM. The SAM can be used for high secure key storage and acts as a very performant crypto coprocessor. A dedicated SAM is available for connection to the CLRC663.

3. Features and benefits

- High RF output power frontend IC for transfer speed up to 848 kbit/s
- Supports ISO/IEC 14443 A/MIFARE, ISO/IEC 14443 B and FeliCa
- P2P passive initiator mode in accordance with ISO/IEC 18092
- Supports ISO/IEC15693, ICODE EPC UID and ISO/IEC 18000-3 mode 3/ EPC Class-1 HF
- Supports MIFARE Classic encryption in read/write mode
- Low-Power Card Detection
- Compliance to “EMV contactless protocol specification V2.0.1” on RF level can be achieved
- Antenna connection with minimum number of external components
- Supported host interfaces:
  - SPI up to 10 Mbit/s
  - I^2C-bus interfaces up to 400 kBd in Fast mode, up to 1000 kBd in Fast mode plus
  - RS232 Serial UART up to 1228.8 kBd, with voltage levels dependent on pin voltage supply
- Separate I^2C-bus interface for connection of a secure access module (SAM)
- FIFO buffer with size of 512 byte for highest transaction performance
- Flexible and efficient power saving modes including hard power down, standby and low-power card detection
- Cost saving by integrated PLL to derive system CPU clock from 27.12 MHz RF quartz crystal
- 3.3 V to 5 V power supply
- Up to 8 free programmable input/output pins
- Typical operating distance in read/write mode for communication to a ISO/IEC 14443A/MIFARE Card up to 12 cm, depending on the antenna size and tuning

All information provided in this document is subject to legal disclaimers.

© NXP B.V. 2012. All rights reserved.

4. Quick reference data

Table 1. Quick reference data

Symbol	Parameter	Conditions		Min	Typ	Max	Unit
V_{DD}	supply voltage			3	5	5.5	V
$V_{DD(TVDD)}$	TVDD supply voltage		[1]	3	5	5.5	V
$V_{DD(PVDD)}$	PVDD supply voltage			3	5	5.5	V
I_{pd}	power-down current	PDOWN pin pulled HIGH	[2]	-	8	40	nA
I_{DD}	supply current			-	17	20	mA
$I_{DD(TVDD)}$	TVDD supply current		[3][4]	-	100	200	mA
T_{amb}	ambient temperature			−25	+25	+85	°C
T_{stg}	storage temperature	no supply voltage applied		−40	+25	+100	°C

[1] VDD(PVDD) must always be the same or lower voltage than VDD.

[2] I_{pd} is the sum of all supply currents

[3] $I_{DD(TVDD)}$ depends on VDD(TVDD) and the external circuitry connected to TX1 and TX2.

[4] Typical value: Assumes the usage of a complementary driver configuration and an antenna matched to 40 Ω between pins TX1, TX2 at 13.56 MHz.

5. Ordering information

Table 2. Ordering information

Type number	Package		
	Name	Description	Version
CLRC66301HN[1]	HVQFN32	plastic thermal enhanced very thin quad flat package; no leads; 32 terminals + 1 central ground; body 5 × 5 × 0.85 mm	SOT617-1
CLRC66301HN[2]			

[1] Delivered in one tray, CLRC66301HN/TRAYB.

[2] Delivered in five trays CLRC66301HN/TRAYBM.

All information provided in this document is subject to legal disclaimers.

© NXP B.V. 2012. All rights reserved.

6. Block diagram

The analog interface handles the modulation and demodulation of the antenna signals for the contactless interface.

The contactless UART manages the protocol dependency of the contactless interface settings managed by the host.

The FIFO buffer ensures fast and convenient data transfer between host and the contactless UART.

The register bank contains the settings for the analog and digital functionality.

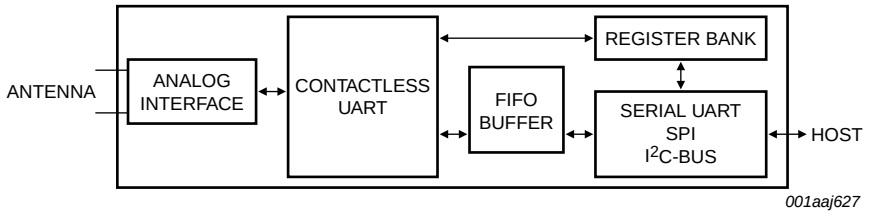

Fig 1. Simplified block diagram of the CLRC663

7. Pinning information

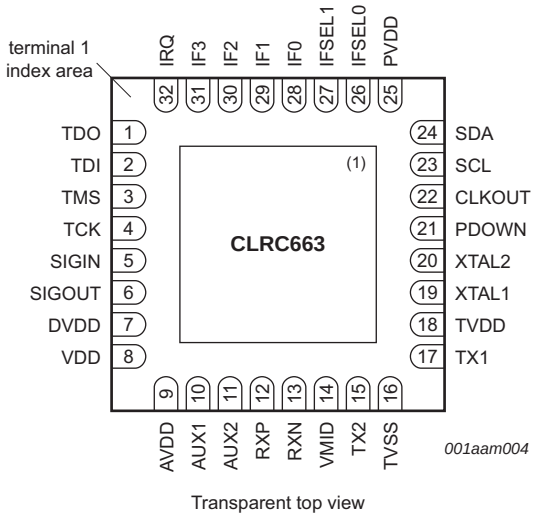

(1) Pin 33 VSS - heatsink connection

Fig 2. Pinning configuration HVQFN32 (SOT617-1)

All information provided in this document is subject to legal disclaimers.

© NXP B.V. 2012. All rights reserved.

7.1 Pin description

Table 3. Pin description

Pin	Symbol	Type	Description
1	TDO	O	test data output for boundary scan interface
2	TDI	I	test data input boundary scan interface
3	TMS	I	test mode select boundary scan interface
4	TCK	I	test clock boundary scan interface
5	SIGIN	I	Contactless communication interface output.
6	SIGOUT	O	Contactless communication interface input.
7	DVDD	PWR	digital power supply buffer [1]
8	VDD	PWR	power supply
9	AVDD	PWR	analog power supply buffer [1]
10	AUX1	O	auxiliary outputs: Pin is used for analog test signal
11	AUX2	O	auxiliary outputs: Pin is used for analog test signal
12	RXP	I	receiver input pin for the received RF signal.
13	RXN	I	receiver input pin for the received RF signal.
14	VMID	PWR	internal receiver reference voltage [1]
15	TX2	O	transmitter 2: delivers the modulated 13.56 MHz carrier
16	TVSS	PWR	transmitter ground, supplies the output stage of TX1, TX2
17	TX1	O	transmitter 1: delivers the modulated 13.56 MHz carrier
18	TVDD	PWR	transmitter voltage supply
19	XTAL1	I	crystal oscillator input: Input to the inverting amplifier of the oscillator. This is pin is also the input for an externally generated clock (fosc = 27,12 MHz)
20	XTAL2	O	crystal oscillator output: output of the inverting amplifier of the oscillator
21	PDOWN	I	Power Down
22	CLKOUT	O	clock output.
23	SCL	O	Serial Clock line
24	SDA	I/O	Serial Data Line
25	PVDD	PWR	pad power supply
26	IFSEL0	I	host interface selection 0
27	IFSEL1	I	host interface selection 1
28	IF0	I/O	interface pin, multifunction pin: Can be assigned to host interface RS232, SPI, I^2C, I^2C-L
29	IF1	I/O	interface pin, multifunction pin: Can be assigned to host interface SPI, I^2C, I^2C-L
30	IF2	I/O	interface pin, multifunction pin: Can be assigned to host interface RS232, SPI, I^2C, I^2C-L
31	IF3	I/O	interface pin, multifunction pin: Can be assigned to host interface RS232, SPI, I^2C, I^2C-L
32	IRQ	O	interrupt request: output to signal an interrupt event
33	VSS	PWR	ground and heatsink connection

[1] This pin is used for connection of a buffer capacitor. Connection of a supply voltage might damage the device.

All information provided in this document is subject to legal disclaimers.

© NXP B.V. 2012. All rights reserved.

8. Functional description

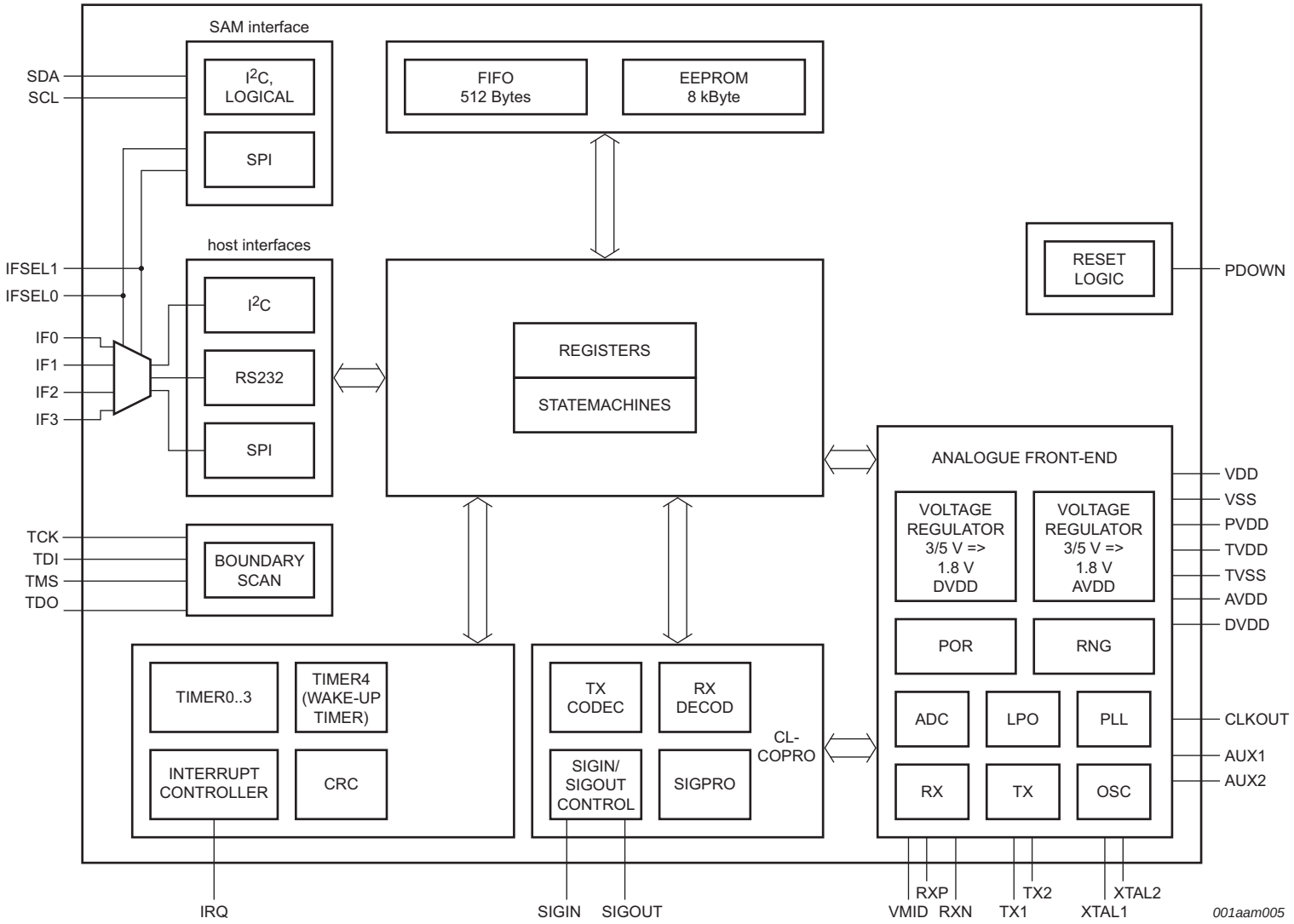

Fig 3. Detailed block diagram of the CLRC663

All information provided in this document is subject to legal disclaimers.
© NXP B.V. 2012. All rights reserved.

8.1 Interrupt controller

The interrupt controller handles the enabling/disabling of interrupt requests. All of the interrupts can be configured by firmware. Additionally, the firmware has possibilities to trigger interrupts or clear pending interrupt requests. Two 8-bit interrupt registers IRQ0 and IRQ1 are implemented, accompanied by two 8-bit interrupt enable registers IRQ0En and IRQ1En. A dedicated functionality of bit 7 to set and clear bits 0 to 6 in this interrupt controller registers is implemented.

The CLRC663 indicates certain events by setting bit IRQ in the register Status1Reg and additionally, if activated, by pin IRQ. The signal on pin IRQ may be used to interrupt the host using its interrupt handling capabilities. This allows the implementation of efficient host software.

The following table shows the available interrupt bits, the corresponding source and the condition for its activation. The interrupt bit TimernIrq in register IRQ1 indicates an interrupt set by the timer unit. The setting is done if the timer underflows.

The TxIrq bit in register IRq0 indicates that the transmission is finished. If the state changes from sending data to transmitting the end of the frame pattern, the transmitter unit sets the interrupt bit automatically.

The bit RxIrq in register IRQ0 indicates an interrupt when the end of the received data is detected.

The bit IdleIrq in register IRQ0 is set if a command finishes and the content of the command register changes to idle.

The waterlevel defines both - minimum and maximum warning levels - counting from top and from bottom of the FIFO by a single value.

The bit HiAlertIrq in register IRQ0 is set to logic 1 if the HiAlert bit is set to logic 1, that means the FIFO data number has reached the top level as configured by the bit WaterLevel.

The bit LoAlertIrq in register IRQ0 is set to logic 1 if the LoAlert bit is set to logic 1, that means the FIFO data number has reached the bottom level as configured by the bit WaterLevel.

The bit ErrIrq in register IRQ0 indicates an error detected by the contactless UART during receive. This is indicated by any bit set to logic 1 in register Error.

The bit LPCDIrq in register IRQ0 indicates a card detected.

The bit RxSOFIrq in register IRQ0 indicates a detection of a SOF or a subcarrier by the contactless UART during receiving.

The bit GlobalIRq in register IRQ1 indicates an interrupt occurring at any other interrupt source when enabled.

All information provided in this document is subject to legal disclaimers.

© NXP B.V. 2012. All rights reserved.

Table 4. Interrupt sources

Interrupt bit	Interrupt source	Is set automatically, when
Timer0Irq	Timer Unit	the timer register T0 CounterVal underflows
Timer1Irq	Timer Unit	the timer register T1 CounterVal underflows
Timer2Irq	Timer Unit	the timer register T2 CounterVal underflows
Timer3Irq	Timer Unit	the timer register T3 CounterVal underflows
TxIrq	Transmitter	a transmitted data stream ends
RxIrq	Receiver	a received data stream ends
IdleIrq	Command Register	a command execution finishes
HiAlertIrq	FIFO-buffer pointer	the FIFO data number has reached the top level as configured by the bit WaterLevel
LoAlertIrq	FIFO-buffer pointer	the FIFO data number has reached the bottom level as configured by the bit WaterLevel
ErrIrq	contactless UART	a communication error had been detected
LPCDIrq	LPCD	a card was detected when in low-power card detection mode
RxSOFIrq	Receiver	detection of a SOF or a subcarrier
GlobalIrq	all interrupt sources	will be set if another interrupt request source is set

All information provided in this document is subject to legal disclaimers.

© NXP B.V. 2012. All rights reserved.

8.2 Timer module

Timer module overview

The CLRC663 implements five timers. Each of four timers Timer0 to Timer3 has an input clock that can be configured by register T(x)Control to be 13.56 MHz, 212 kHz, (derived from the 27.12 MHz quartz) or to be the underflow event of a Timer. Each timer implements a counter register which is 16 bit wide. A reload value for the counter is defined in a range of 0000h to FFFFh in the registers TxReloadHi and TxReloadLo. The fourth timer Timer4 is intended to be used as a wakeup timer and is connected to the internal LPO (Low-Power Oscillator) as input clock source.

The TControl register allows the global start and stop of each of the four timers Timer0 to Timer3. Additionally, this register indicates if one of the timers is running or stopped. Each of the five timers implements an individual configuration register set defining timer reload value (e.g. T0ReloadHi,T0ReloadLo), the timer value (e.g. T0CounterValHi, T0CounterValLo) and the conditions which define start, stop and clockfrequency (e.g. T0Control).

The external host may use these timers to manage timing relevant tasks. The timer unit may be used in one of the following configurations:

- Time-out counter
- Watch-dog counter
- Stop watch
- Programmable one-shot timer
- Periodical trigger

The timer unit can be used to measure the time interval between two events or to indicate that a specific event has occurred after an elapsed time. The timer register content is modified by the timer unit, which can be used to generate an interrupt to allow an host to react on this event.

The counter value of the timer is available in the registers T(x)CounterValHi, T(x)CounterValLo. The content of these registers is decremented at each timer clock.

If the counter value has reached a value of 0000h and the interrupts are enabled for this specific timer, an interrupt will be generated as soon as the next clock is received.

If enabled, the timer event can be indicated on the pin IRQ (interrupt request). The bit Timer(x)Irq can be set and reset by the host controller. Depending on the configuration, the timer will stop counting at 0000h or restart with the value loaded from registers T(x)ReloadHi, T(x)ReloadLo.

The counting of the timer is indicated by bit TControl.T(x)Running.

The timer can be started by setting bits TControl.T(x)Running and TControl.T(x)StartStopNow or stopped by setting the bits TControl.T(x)StartStopNow and clearing TControl.T(x)Running.

Another possibility to start the timer is to set the bit T(x)Mode.T(x)Start, this can be useful if dedicated protocol requirements need to be fulfilled.

All information provided in this document is subject to legal disclaimers.

© NXP B.V. 2012. All rights reserved.

8.2.1 Timer modes

8.2.1.1 Time-Out- and Watch-Dog-Counter

Having configured the timer by setting *register T(x)ReloadValue* and starting the counting of Timer(x) by setting bit TControl.T(x)StartStop and TControl.T(x)Running, the timer unit decrements the *T(x)CounterValue* Register beginning with the configured start event. If the configured stop event occurs before the Timer(x) underflows (e.g. a bit is received from the card), the timer unit stops (no interrupt is generated).

If no stop event occurs, the timer unit continues to decrement the counter registers until the content is zero and generates a timer interrupt request at the next clock cycle. This allows to indicate to a host that the event did not occur during the configured time interval.

8.2.1.2 Wake-up timer

The wake-up Timer4 allows to wakeup the system from standby after a predefined time. The system can be configured in such a way that it is entering the standby mode again in case no card had been detected.

This functionality can be used to implement a low-power card detection (LPCD). For the low-power card detection it is recommended to set T4Control.T4AutoWakeUp and T4Control.T4AutoRestart, to activate the Timer4 and automatically set the system in standby. The internal low-power clock oscillator (LPO) is then used as input clock for this Timer4. If a card is detected the host-communication can be started. If bit T4Control.T4AutoWakeUp is not set, the CLRC663 will not enter the standby mode again in case no card is detected but stays fully powered.

8.2.1.3 Stop watch

The elapsed time between a configured start- and stop event may be measured by the CLRC663 timer unit. By setting the registers *T(x)ReloadValueHi, T(x)reloadValueLo* the timer starts to decrement as soon as activated. If the configured stop event occurs, the timers stops decrementing. The elapsed time between start and stop event can then be calculated by the host dependent on the timer interval TTimer:

$$\Delta T = \left(Treload_{value} - Timer_{value}\right) * T_{Timer} \quad (1)$$

If an underflow occurred which can be identified by evaluating the corresponding IRQ bit, the performed time measurement according to the formula above is not correct.

8.2.1.4 Programmable one-shot timer

The host configures the interrupt and the timer, starts the timer and waits for the interrupt event on pin IRQ. After the configured time the interrupt request will be raised.

8.2.1.5 Periodical trigger

If the bit *T(x)Control.T(x)AutoRestart is set and the interrupt is activated*, an interrupt request will be indicated periodically after every elapsed timer period.

All information provided in this document is subject to legal disclaimers.

© NXP B.V. 2012. All rights reserved.

8.3 Contactless interface unit

The contactless interface unit of the CLRC663 supports the following read/write operating modes:

- ISO/IEC14443A/MIFARE
- ISO/IEC14443B
- FeliCA
- ISO/IEC15693/ICODE
- ICODE EPC UID
- ISO/IEC 18000-3 mode 3/ EPC Class-1 HF

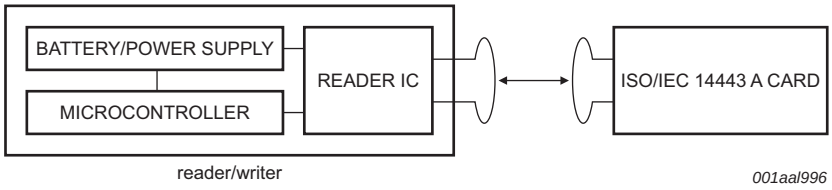

Fig 4. Read/write mode

A typical system using the CLRC663 is using a microcontroller to implement the higher levels of the contactless communication protocol and a power supply (battery or external supply).

8.3.1 ISO/IEC14443A/MIFARE functionality

The physical level of the communication is shown in Figure 5.

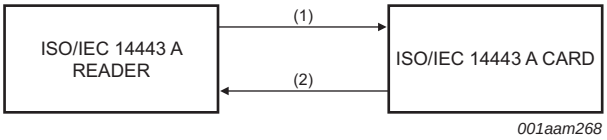

(1) Reader to Card 100 % ASK, Miller Coded, Transfer speed 106 kbit/s to 848 kbit/s

(2) Card to Reader, Subcarrier Load Modulation Manchester Coded or BPSK, transfer speed 106 kbit/s to 848 kbit/s

Fig 5. ISO/IEC 14443 A/MIFARE read/write mode communication diagram

The physical parameters are described in Table 5.

All information provided in this document is subject to legal disclaimers.

© NXP B.V. 2012. All rights reserved.

Table 5. Communication overview for ISO/IEC 14443 A/MIFARE reader/writer

Communication direction	Signal type	Transfer speed			
		106 kbit/s	212 kbit/s	424 kbit/s	848 kbit/s
Reader to card (send data from the CLRC663 to a card) fc = 13.56 MHz	reader side modulation	100 % ASK	ASK	ASK	ASK
	bit encoding	modified Miller encoding	modified Miller encoding	modified Miller encoding	modified Miller encoding
	bit rate [kbit/s]	fc / 128	fc / 64	fc / 32	fc / 16
Card to reader (CLRC663 receives data from a card)	card side modulation	subcarrier load modulation	subcarrier load modulation	subcarrier load modulation	subcarrier load modulation
	subcarrier frequency	fc / 16	fc / 16	fc / 16	fc / 16
	bit encoding	Manchester encoding	BPSK	BPSK	BPSK

The CLRC663 connection to a host is required to manage the complete ISO/IEC 14443 A/MIFARE protocol. Figure 6 shows the data coding and framing according to ISO/IEC 14443A /MIFARE.

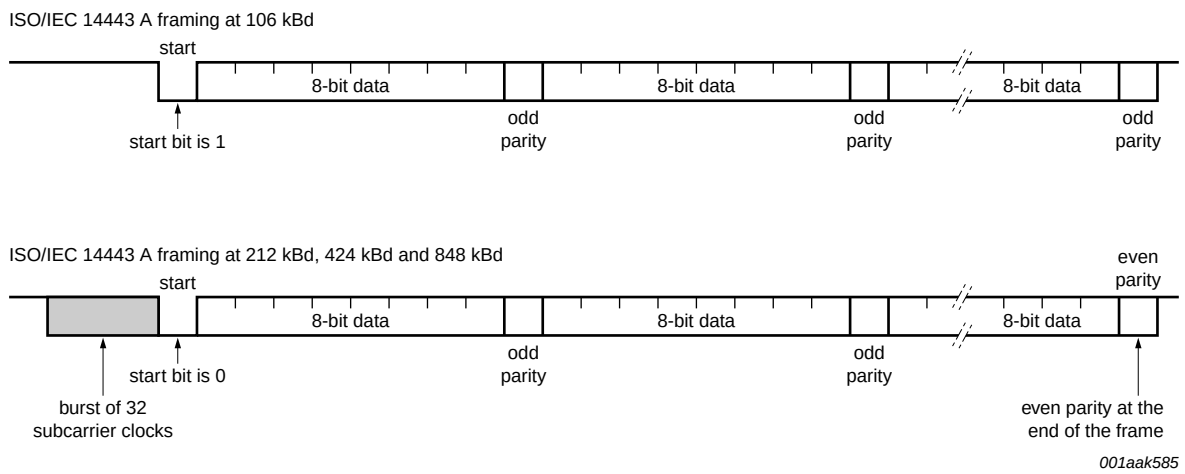

Fig 6. Data coding and framing according to ISO/IEC 14443 A

The internal CRC coprocessor calculates the CRC value based on ISO/IEC 14443 A part 3 and handles parity generation internally according to the transfer speed.

All information provided in this document is subject to legal disclaimers.

© NXP B.V. 2012. All rights reserved.

8.3.2 ISO/IEC14443B functionality

The physical level of the communication is shown in Figure 7.

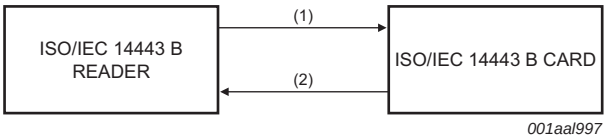

(1) Reader to Card NRZ, Miller coded, transfer speed 106 kbit/s to 848 kbit/s

(2) Card to reader, Subcarrier Load Modulation Manchester Coded or BPSK, transfer speed 106 kbit/s to 848 kbit/s

Fig 7. ISO/IEC 14443 A/MIFARE read/write mode communication diagram

The physical parameters are described in Table 6.

Table 6. Communication overview for ISO/IEC 14443 B reader/writer

Communication direction	Signal type	Transfer speed			
		106 kbit/s	212 kbit/s	424 kbit/s	848 kbit/s
Reader to card (send data from the CLRC663 to a card) fc = 13.56 MHz	reader side modulation	10 % ASK	10 % ASK	10 % ASK	10 % ASK
	bit encoding	NRZ	NRZ	NRZ	NRZ
	bit rate [kbit/s]	128 / fc	64 / fc	32 / fc	16 / fc
Card to reader (CLRC663 receives data from a card)	card side modulation	subcarrier load modulation	subcarrier load modulation	subcarrier load modulation	subcarrier load modulation
	subcarrier frequency	fc / 16	fc / 16	fc / 16	fc / 16
	bit encoding	BPSK	BPSK	BPSK	BPSK

The CLRC663 connected to a host is required to manage the complete ISO/IEC 14443 B protocol. The following Figure 8 “SOF and EOF according to ISO/IEC 14443 B” shows the ISO/IEC 14443B SOF and EOF.

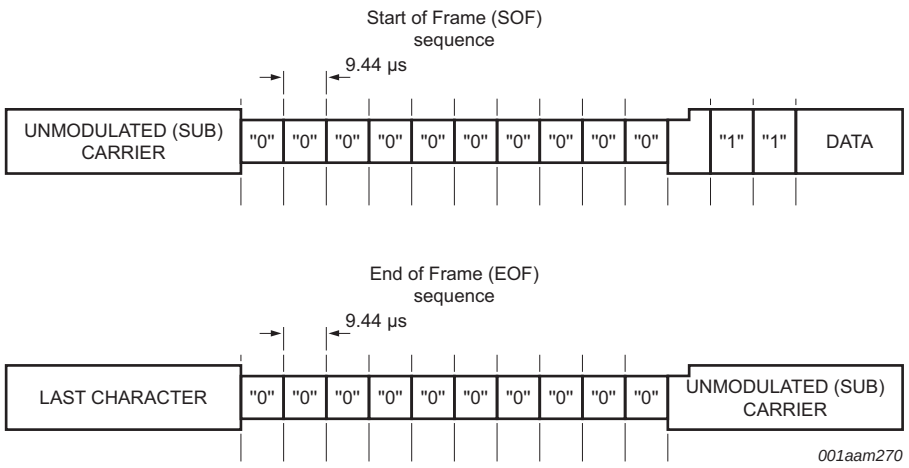

Fig 8. SOF and EOF according to ISO/IEC 14443 B

All information provided in this document is subject to legal disclaimers.

© NXP B.V. 2012. All rights reserved.

8.3.3 FeliCa functionality

The FeliCa mode is the general reader/writer to card communication scheme according to the FeliCa specification. The communication on a physical level is shown in Figure 9.

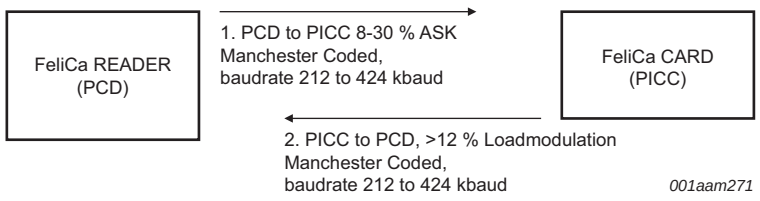

Fig 9. FeliCa read/write communication diagram

The physical parameters are described in Table 7.

Table 7. Communication overview for FeliCa reader/writer

Communication direction	Signal type	Transfer speed FeliCa	FeliCa higher transfer speeds
		212 kbit/s	424 kbit/s
Reader to card (send data from the CLRC663 to a card) fc = 13.56 MHz	reader side modulation	8 % to 30 % ASK	8 % to 30 % ASK
	bit encoding	Manchester encoding	Manchester encoding
	bit rate	fc/64	fc/32
Card to reader (CLRC663 receives data from a card)	card side load modulation	30/H^1.2 (H = field strength [A/m])	30/H^1.2 (H = field strength [A/m])
	bit encoding	Manchester encoding	Manchester encoding

The CLRC663 needs to be connected to a host to be able to support the complete FeliCa protocol.

8.3.3.1 FeliCa framing and coding

Table 8. FeliCa framing and coding

Preamble (Hex.)						Sync (Hex.)		Len	n-Data				CRC	
00	00	00	00	00	00	B2	4D							

To enable the FeliCa communication a 6 byte preamble (00h, 00h, 00h, 00h, 00h, 00h) and 2 bytes sync bytes (B2h, 4Dh) are sent to synchronize the receiver.

The following Len byte indicates the length of the sent data bytes plus the LEN byte itself. The CRC calculation is done according to the FeliCa definitions with the MSB first.

To transmit data on the RF interface, the host controller has to send the Len- and data-bytes to the CLRC663's FIFO-buffer. The preamble and the sync bytes are generated by the CLRC663 automatically and must not be written to the FIFO by the host controller. The CLRC663 performs internally the CRC calculation and adds the result to the data frame.

8.3.4 ISO/IEC15693 functionality

The physical parameters are described in Table 9.

All information provided in this document is subject to legal disclaimers.

© NXP B.V. 2012. All rights reserved.

Table 9. Communication overview for ISO/IEC 15693 reader/writer reader to label

Communication direction	Signal type	Transfer speed	
		fc / 8192 kbit/s	fc / 512 kbit/s
Reader to label (send data from the CLRC663 to a card)	reader side modulation	10 % to 30 % ASK or 100 % ASK	10 % to 30 % ASK 90 % to 100 % ASK
	bit encoding	1/256	1/4
	bit length	4.833 ms	302.08 ms

Table 10. Communication overview for ISO/IEC 15693 reader/writer label to reader

Communication direction	Signal type	Transfer speed			
		6.62 (6.67) kbit/s	13.24 kbit/s[1]	26.48 (26.69) kbit/s	52.96 kbit/s
Label to reader (CLRC663 receives data from a card) fc = 13.56 MHz	card side modulation	not supported	not supported	single (dual) subcarrier load modulation ASK	single subcarrier load modulation ASK
	bit length (ms)	-	-	37.76 (3.746)	18.88
	bit encoding	-	-	Manchester coding	Manchester coding
	subcarrier frequency [MHz]	-	-	fc / 32 (fc / 28)	fc / 32

[1] Fast inventory (page) read command only (ICODE proprietary command).

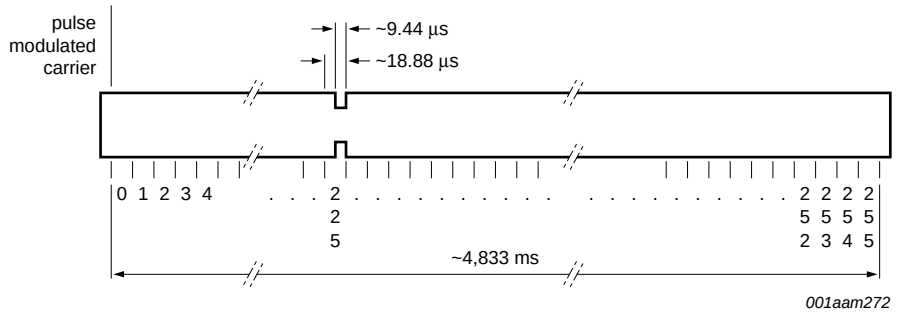

Fig 10. Data coding according to ISO/IEC 15693. standard mode reader to label

All information provided in this document is subject to legal disclaimers.

© NXP B.V. 2012. All rights reserved.

8.3.5 EPC-UID/UID-OTP functionality

The physical parameters are described in Table 11.

Table 11. Communication overview for EPC/UID

Communication direction	Signal type	Transfer speed	
		26.48 kbit/s	52.96 kbit/s
Reader to card (send data from the CLRC663 to a card)	reader side modulation	10 % to 30 % ASK	
	bit encoding	RTZ	
	bit length	37.76 µs	
Card to reader (CLRC663 receives data from a card)	card side modulation		single subcarrier load modulation
	bit length		18.88 ms
	bit encoding		Manchester coding

Data coding and framing according to EPC global 13.56 MHz ISM (industrial, scientific and medical) Band Class 1 Radio Frequency Identification Tag Interface Specification (Candidate Recommendation, Version 1.0.0).

8.3.6 ISO/IEC 18000-3 mode 3/ EPC Class-1 HF functionality

The ISO/IEC 18000-3 mode 3/ EPC Class-1 HF is not described in this document. For a detailed explanation of the protocol, refer to the ISO/IEC 18000-3 mode 3/ EPC Class-1 HF standard.

8.3.7 ISO/IEC 18092 mode

The CLRC663 supports Passive Initiator Communication mode at the transfer speeds 106 kbit/s, 212 kbit/s and 424 kbit/s as defined in the ISO/IEC 18092 standard.

- Passive communication mode means that the target answers to an initiator command in a load modulation scheme. The initiator is active in terms of generating the RF field.
- Initiator: generates RF field at 13.56 MHz and starts the ISO/IEC 18092 communication.
- Target: responds to initiator command either in a load modulation scheme in Passive communication mode or using a self generated and self modulated RF field for Active Communication mode.

All information provided in this document is subject to legal disclaimers.

© NXP B.V. 2012. All rights reserved.

8.3.7.1 Passive communication mode

Passive communication mode means that the target answers to an initiator command in a load modulation scheme. The initiator is active meaning generating the RF field.

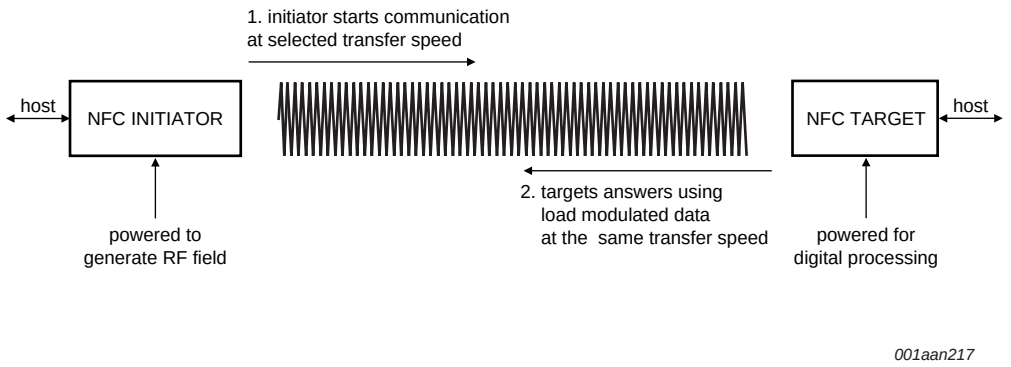

Fig 11. Passive communication mode

Table 12. Communication overview for Passive communication mode

Communication direction	106 kbit/s	212 kbit/s	424 kbit/s
Initiator → target	According to ISO/IEC 14443A 100 % ASK, Modified Miller Coded	According to FeliCa, 8 % to 30 % ASK Manchester Coded	
Target → initiator	According to ISO/IEC 14443A subcarrier load modulation, Manchester Coded	According to FeliCa, > 12 % ASK Manchester Coded	

The contactless UART of CLRC663 and a dedicated host controller are required to handle the ISO/IEC 18092 passive initiator protocol.

All information provided in this document is subject to legal disclaimers.

© NXP B.V. 2012. All rights reserved.

8.3.7.2 ISO/IEC 18092 framing and coding

The ISO/IEC 18092 framing and coding in Passive communication mode is defined in the ISO/IEC 18092 standard.

Table 13. Framing and coding overview

Transfer speed	Framing and Coding
106 kbit/s	According to the ISO/IEC 14443A/MIFARE scheme
212 kbit/s	According to the FeliCa scheme
424 kbit/s	According to the FeliCa scheme

8.3.7.3 ISO/IEC 18092 protocol support

The ISO/IEC 18092 protocol is not described in this document. For a detailed explanation of the protocol, refer to the ISO/IEC 18092 standard.

8.3.8 EPC Class-1 HF and ICODE

8.3.8.1 Data encoding ICODE

The ICODE protocols have mainly three different methods of data encoding:

- “1” out of “4” coding scheme
- “1” out of “256” coding scheme
- “Return to Zero” (RZ) coding scheme.

Data encoding for all three coding schemes is done by the ICODE generator.

The supported EPC Class-1 HF modes are:

- 2 pulse for 424 Kbit subcarrier
- 4 pulse for 424 Kbit subcarrier
- 2 pulse for 848 Kbit subcarrier
- 4 pulse for 848 Kbit subcarrier

8.4 Host interfaces

8.4.1 Host interface configuration

The CLRC663 supports direct interfacing of various hosts as the SPI, I^2C, I^2CL and serial UART interface type. The CLRC663 resets its interface and checks the current host interface type automatically having performed a power-up or resuming from power down. The CLRC663 identifies the host interface by the means of the logic levels on the control pins after the Cold Reset Phase. This is done by a combination of fixed pin connections.The following table shows the possible configurations defined by IFSEL1,IFSEL0:

All information provided in this document is subject to legal disclaimers.

© NXP B.V. 2012. All rights reserved.

Table 14. Connection scheme for detecting the different interface types

Pin	Pin Symbol	UART	SPI	I²C	I²C-L
28	IF0	RX	MOSI	ADR1	ADR1
29	IF1	-	SCK	SCL	SCL
30	IF2	TX	MISO	ADR2	SDA
31	IF3	1	NSS	SDA	ADR2
26	IFSEL0	0	0	1	1
27	IFSEL1	0	1	0	1

8.4.2 SPI interface

8.4.2.1 General

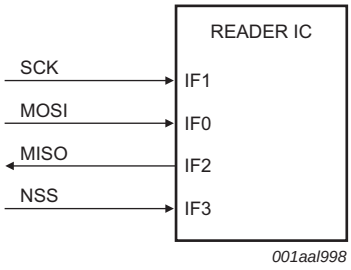

Fig 12. Connection to host with SPI

The CLRC663 acts as a slave during the SPI communication. The SPI clock SCK has to be generated by the master. Data communication from the master to the slave uses the Line MOSI. Line MISO is used to send data back from the CLRC663 to the master.

A serial peripheral interface (SPI compatible) is supported to enable high speed communication to a host. The implemented SPI compatible interface is according to a standard SPI interface. The SPI interface can handle data speed of up to 10 Mbit/s. In the communication with a host CLRC663 acts as a slave receiving data from the external host for register settings and to send and receive data relevant for the communication on the RF interface.

On both data lines (MOSI, MISO) each data byte is sent by MSB first. Data on MOSI line shall be stable on rising edge of the clock line (SCK) and is allowed to change on falling edge. The same is valid for the MISO line. Data is provided by the CLRC663 on the falling edge and is stable on the rising edge.The polarity of the clock is low at SPI idle.

8.4.2.2 Read data

To read out data from the CLRC663 by using the SPI compatible interface the following byte order has to be used.

The first byte that is sent defines the mode (LSB bit) and the address.

Table 15. Byte Order for MOSI and MISO

	byte 0	byte 1	byte 2	byte 3 to n-1	byte n	byte n+1
MOSI	address 0	address 1	address 2	……..	address n	00h
MISO	X	data 0	data 1	……..	data n – 1	data n

All information provided in this document is subject to legal disclaimers.

© NXP B.V. 2012. All rights reserved.

Remark: The Most Significant Bit (MSB) has to be sent first.

8.4.2.3 Write data

To write data to the CLRC663 using the SPI interface the following byte order has to be used. It is possible to write more than one byte by sending a single address byte (see.8.5.2.4).

The first send byte defines both, the mode itself and the address byte.

Table 16. Byte Order for MOSI and MISO

	byte 0	byte 1	byte 2	3 to n-1	byte n	byte n + 1
MOSI	address 0	data 0	data 1	……..	data n – 1	data n
MISO	X	X	X	……..	X	X

Remark: The Most Significant Bit (MSB) has to be sent first.

8.4.2.4 Address byte

The address byte has to fulfil the following format:

The LSB bit of the first byte defines the used mode. To read data from the CLRC663 the LSB bit is set to logic 1. To write data to the CLRC663 the LSB bit has to be cleared. The bits 6 to 0 define the address byte.

NOTE: When writing the sequence [address byte][data1][data2][data3]..., [data1] is written to address [address byte], [data2] is written to address [address byte + 1] and [data3] is written to [address byte + 2].

Exception: This auto increment of the address byte is not performed if data is written to the FIFO address

Table 17. Address byte 0 register; address MOSI

7	6	5	4	3	2	1	0
address 6	address 5	address 4	address 3	address 2	address 1	address 0	1 (read) 0 (write)
MSB							LSB

8.4.2.5 Timing Specification SPI

The timing condition for SPI interface is as follows:

Table 18. Timing conditions SPI

Symbol	Parameter	Min	Typ	Max	Unit
t_{SCKL}	SCK LOW time	50	-	-	ns
t_{SCKH}	SCK HIGH time	50	-	-	ns
$t_{h(SCKH-D)}$	SCK HIGH to data input hold time	25	-	-	ns
$t_{su(D-SCKH)}$	data input to SCK HIGH set-up time	25	-	-	ns
$t_{h(SCKL-Q)}$	SCK LOW to data output hold time	-	-	25	ns
$t_{(SCKL-NSSH)}$	SCK LOW to NSS HIGH time	0	-	-	ns
t_{NSSH}	NSS HIGH time	50	-	-	ns

All information provided in this document is subject to legal disclaimers.

© NXP B.V. 2012. All rights reserved.

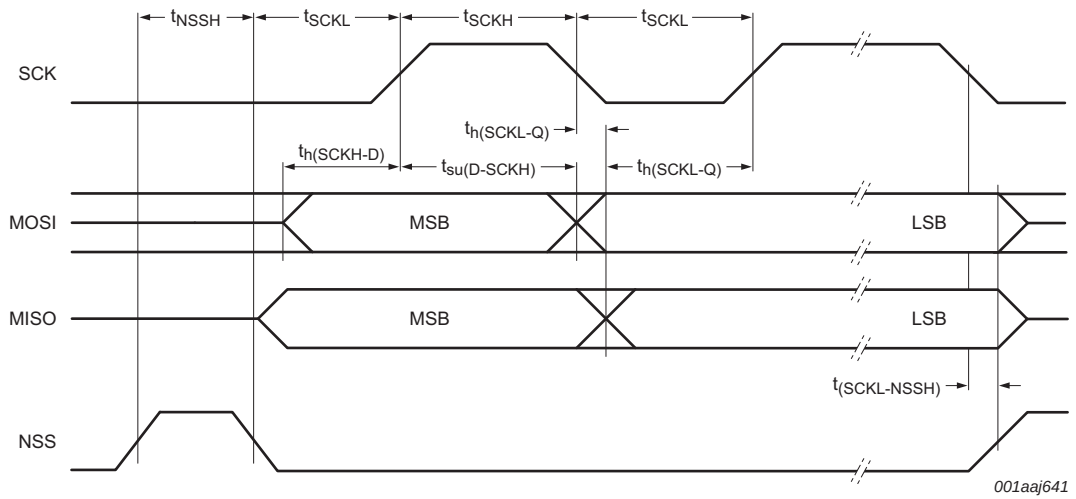

Fig 13. Connection to host with SPI

Remark: To send more bytes in one data stream the NSS signal must be LOW during the send process. To send more than one data stream the NSS signal must be HIGH between each data stream.

8.4.3 RS232 interface

8.4.3.1 Selection of the transfer speeds

The internal UART interface is compatible to a RS232 serial interface.

Table 20 “Selectable transfer speeds” describes examples for different transfer speeds and relevant register settings. The resulting transfer speed error is less than 1.5 % for all described transfer speeds. The default transfer speed is 115.2 kbit/s.

To change the transfer speed, the host controller has to write a value for the new transfer speed to the register SerialSpeedReg. The bits BR_T0 and BR_T1 define factors to set the transfer speed in the SerialSpeedReg.

Table 19 “Settings of BR_T0 and BR_T1” describes the settings of BR_T0 and BR_T1.

Table 19. Settings of BR_T0 and BR_T1

BR_T0	0	1	2	3	4	5	6	7
factor BR_T0	1	1	2	4	8	16	32	64
range BR_T1	1 to 32	33 to 64	33 to 64	33 to 64	33 to 64	33 to 64	33 to 64	33 to 64

Table 20. Selectable transfer speeds

Transfer speed (kbit/s)	Serial SpeedReg (Hex.)	Transfer speed accuracy (%)
7.2	FA	–0.25
9.6	EB	0.32
14.4	DA	–0.25
19.2	CB	0.32

All information provided in this document is subject to legal disclaimers.

© NXP B.V. 2012. All rights reserved.

Table 20. Selectable transfer speeds

Transfer speed (kbit/s)	Serial SpeedReg (Hex.)	Transfer speed accuracy (%)
38.4	AB	0.32
57.6	9A	–0.25
115.2	7A	–0.25
128	74	–0.06
230.4	5A	–0.25
460.8	3A	–0.25
921.6	1C	1.45
1228.8	15	0.32

The selectable transfer speeds as shown are calculated according to the following formulas:

if BR_T0 = 0: transfer speed = 27.12 MHz / (BR_T1 + 1)

if BR_T0 > 0: transfer speed = 27.12 MHz / (BR_T1 + 33)/$2^{(BR_T0 - 1)}$

Remark: Transfer speeds above 1228.8 KBits/s are not supported.

8.4.3.2 Framing

Table 21. UART framing

Bit	Length	Value
Start bit (Sa)	1 bit	0
Data bits	8 bit	Data
Stop bit (So)	1 bit	1

Remark: For data and address bytes the LSB bit has to be sent first. No parity bit is used during transmission.

Read data: To read out data using the UART interface the flow described below has to be used. The first send byte defines both the mode itself and the address.The Trigger on pin IF3 has to be set, otherwise no read of data is possible.

Table 22. Byte Order to Read Data

Mode	byte 0	byte 1
RX	address	-
TX	-	data 0

All information provided in this document is subject to legal disclaimers.

© NXP B.V. 2012. All rights reserved.

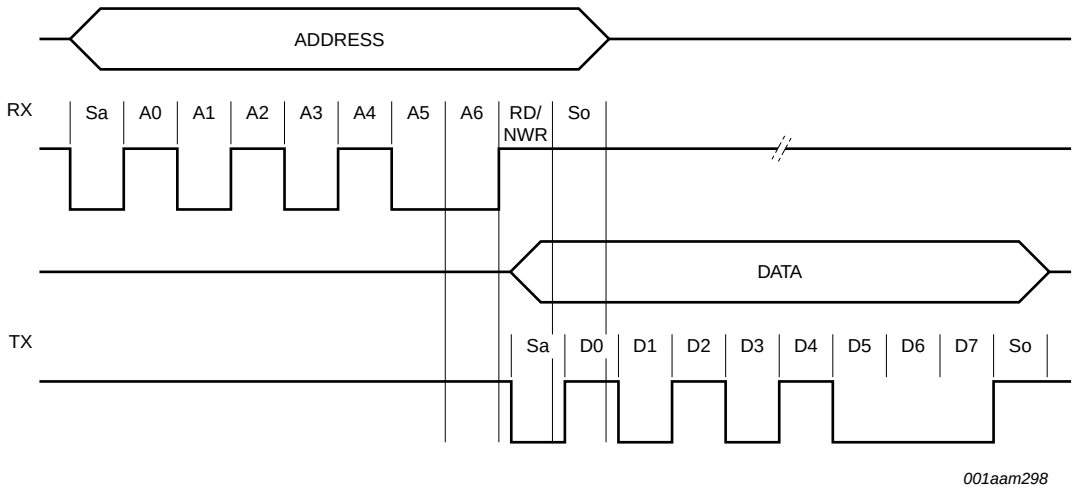

Fig 14. Timing Diagram for UART Read Data

Write data:

To write data to the CLRC663 using the UART interface the following sequence has to be used.

The first send byte defines both, the mode itself and the address.

Table 23. Byte Order to Write Data

Mode	byte 0	byte 1
RX	address 0	data 0
TX		address 0

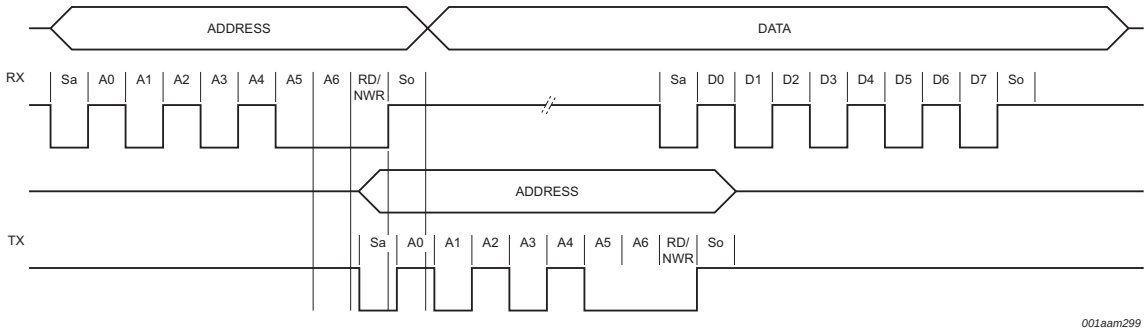

Fig 15. Timing diagram for UART write data

Remark: Data can be sent before address is received.

All information provided in this document is subject to legal disclaimers.

© NXP B.V. 2012. All rights reserved.

8.4.4 I²C-bus interface

8.4.4.1 General

An Inter IC (I²C) bus interface is supported to enable a low cost, low pin count serial bus interface to the host. The implemented I²C interface is mainly implemented according the NXP Semiconductors I²C interface specification, rev. 3.0, June 2007. The CLRC663 can act as a slave receiver or slave transmitter in standard mode, fast mode and fast mode plus.

The following features defined by the NXP Semiconductors I²C interface specification, rev. 3.0, June 2007 are not supported:

- The CLRC663 I2C interface does not stretch the clock
- The CLRC663 I2C interface does not support the general call. This means that the CLRC663 does not support a software reset
- The CLRC663 does not support the I2C device ID
- The implemented interface can only act in slave mode. Therefore no clock generation and access arbitration is implemented in the CLRC663.
- High speed mode is not supported by the CLRC663

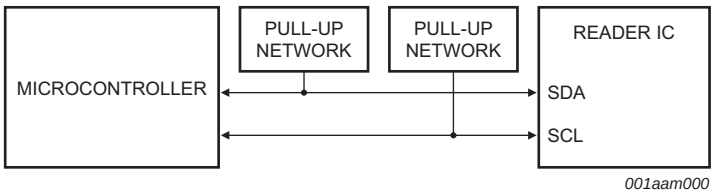

Fig 16. I²C-bus interface

SDA is a bidirectional line, connected to a positive supply voltage via a pull-up resistor. Both lines SDA and SCL are set to HIGH level if no data is transmitted. Data on the I²C-bus can be transferred at data rates of up to 400 kbit/s in fast mode, up to 1 Mbit/s in the fast mode+.

If the I²C interface is selected, a spike suppression according to the I²C interface specification on SCL and SDA is automatically activated.

For timing requirements refer to Table 248 “I²C-bus timing in fast mode and fast mode plus”

8.4.4.2 I²C Data validity

Data on the SDA line shall be stable during the HIGH period of the clock. The HIGH state or LOW state of the data line shall only change when the clock signal on SCL is LOW.

All information provided in this document is subject to legal disclaimers.

© NXP B.V. 2012. All rights reserved.

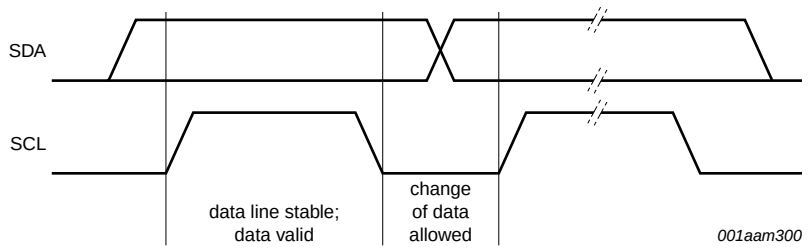

Fig 17. Bit transfer on the I²C-bus.

8.4.4.3 I²C START and STOP conditions

To handle the data transfer on the I²C-bus, unique START (S) and STOP (P) conditions are defined.

A START condition is defined with a HIGH-to-LOW transition on the SDA line while SCL is HIGH.

A STOP condition is defined with a LOW-to-HIGH transition on the SDA line while SCL is HIGH.

The master always generates the START and STOP conditions. The bus is considered to be busy after the START condition. The bus is considered to be free again a certain time after the STOP condition.

The bus stays busy if a repeated START (Sr) is generated instead of a STOP condition. In this respect, the START (S) and repeated START (Sr) conditions are functionally identical. Therefore, the S symbol will be used as a generic term to represent both the START and repeated START (Sr) conditions.

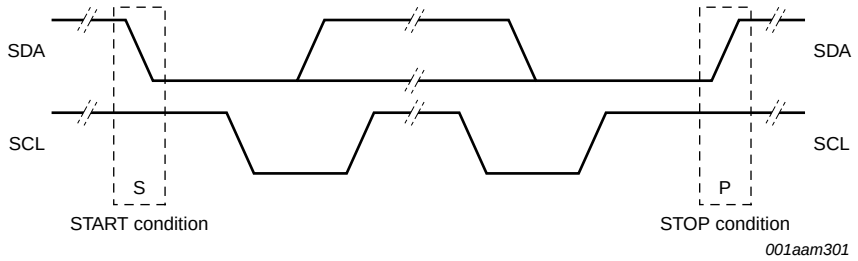

Fig 18. START and STOP conditions

8.4.4.4 I²C byte format

Each byte has to be followed by an acknowledge bit. Data is transferred with the MSB first, see Figure 18 “START and STOP conditions”. The number of transmitted bytes during one data transfer is unrestricted but shall fulfil the read/write cycle format.

All information provided in this document is subject to legal disclaimers.

© NXP B.V. 2012. All rights reserved.

8.4.4.5 I²C Acknowledge

An acknowledge at the end of one data byte is mandatory. The acknowledge-related clock pulse is generated by the master. The transmitter of data, either master or slave, releases the SDA line (HIGH) during the acknowledge clock pulse. The receiver shall pull down the SDA line during the acknowledge clock pulse so that it remains stable LOW during the HIGH period of this clock pulse.

The master can then generate either a STOP (P) condition to stop the transfer, or a repeated START (Sr) condition to start a new transfer.

A master-receiver shall indicate the end of data to the slave- transmitter by not generating an acknowledge on the last byte that was clocked out by the slave. The slave-transmitter shall release the data line to allow the master to generate a STOP (P) or repeated START (Sr) condition.

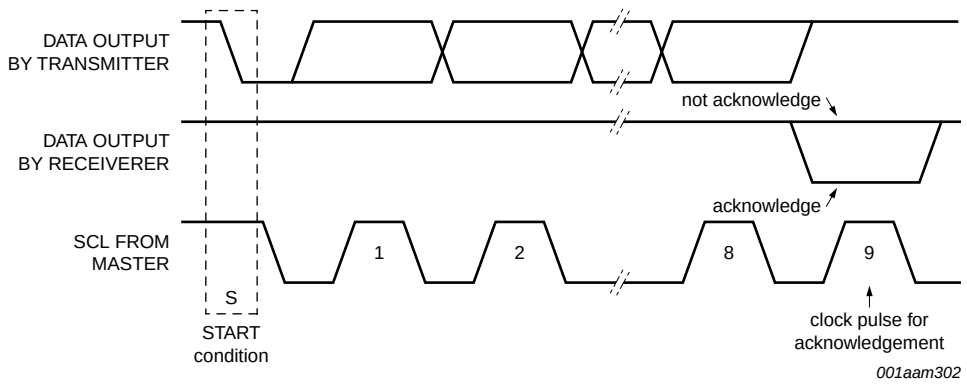

Fig 19. Acknowledge on the I²C- bus

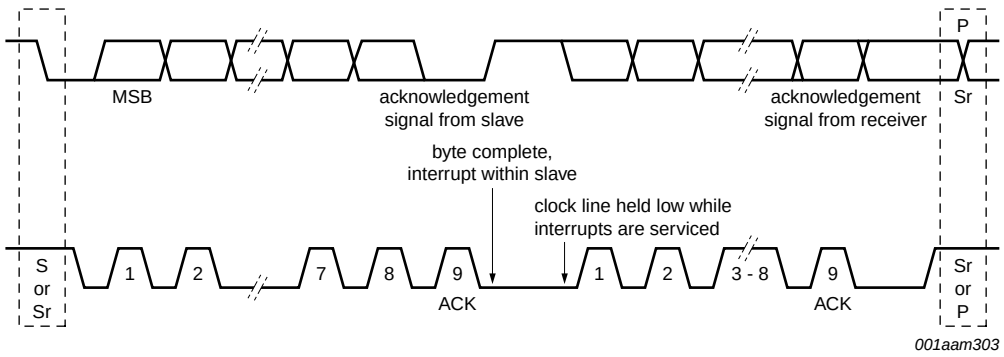

Fig 20. Data transfer on the I²C- bus

8.4.4.6 I²C 7-bit addressing

During the I²C-bus addressing procedure, the first byte after the START condition is used to determine which slave will be selected by the master.

All information provided in this document is subject to legal disclaimers.

© NXP B.V. 2012. All rights reserved.

Alternatively the I²C address can be configured in the EEPROM. Several address numbers are reserved for this purpose. During device configuration, the designer has to ensure, that no collision with these reserved addresses in the system is possible. Check the corresponding I²C specification for a complete list of reserved addresses.

For all CLRC663 devices the upper 5 bits of the device bus address are reserved by NXP and set to 01010(bin). The remaining 2 bits (ADR_2, ADR_1) of the slave address can be freely configured by the customer in order to prevent collisions with other I²C devices by using the interface pins (refer to Table 14) or the value of the I²C address EEPROM register (refer to Table 34).

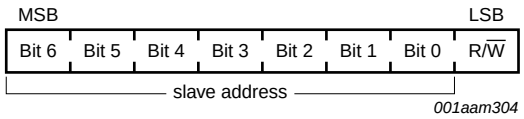

Fig 21. First byte following the START procedure

8.4.4.7 I²C-register write access

To write data from the host controller via I²C to a specific register of the CLRC663 the following frame format shall be used.

The first byte of a frame indicates the device address according to the I²C rules. The second byte indicates the register address followed by up to n-data bytes. In case the address indicates the FIFO, in one frame all n-data bytes are written to the FIFO register address. This enables for example a fast FIFO access. For any other address, the address pointer is incremented automatically and data is written to the locations [address], [address+1], [address+2]... [address+(n-1)]

The read/write bit shall be set to logic 0.

8.4.4.8 I²C-register read access

To read out data from a specific register address of the CLRC663 the host controller shall use the procedure:

First a write access to the specific register address has to be performed as indicated in the following frame:

The first byte of a frame indicates the device address according to the I²C rules. The second byte indicates the register address. No data bytes are added.

The read/write bit shall be logic 0.

Having performed this write access, the read access starts. The host sends the device address of the CLRC663. As an answer to this device address the CLRC663 responds with the content of the addressed register. In one frame n-data bytes could be read using the same register address. The address pointing to the register is incremented automatically (exception: FIFO register address is not incremented automatically). This enables a fast transfer of register content. The address pointer is incremented automatically and data is read from the locations [address], [address+1], [address+2]... [address+(n-1)]

All information provided in this document is subject to legal disclaimers.

© NXP B.V. 2012. All rights reserved.

In order to support a fast FIFO data transfer, the address pointer is not incremented automatically in case the address is pointing to the FIFO.

The read/write bit shall be set to logic 1.

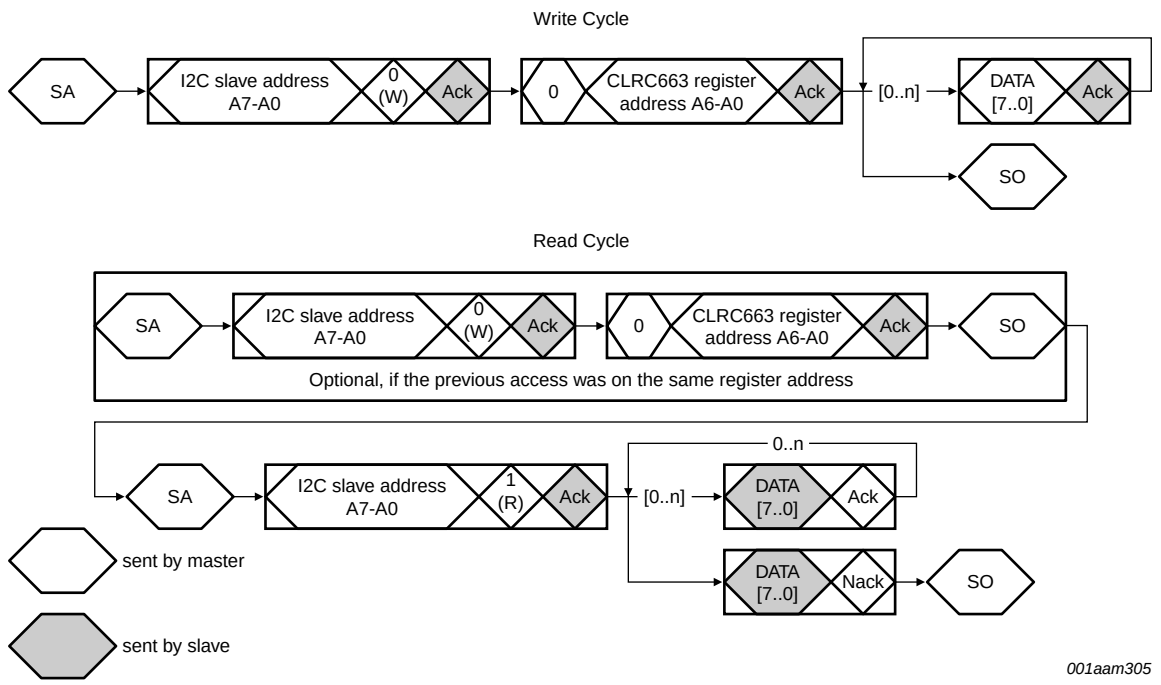

Fig 22. Register read and write access

8.4.4.9 I²CL-bus interface

The CLRC663 provides an interface option according to of a logical handling of an I²C interface. This logical interface fulfills the I²C specification, but the rise/fall timings will not be according the I²C standard. Standard I/O pads are used for communication and the communication speed is limited to 5 MBaud. The protocol itself is equivalent to the fast mode protocol of I²C. The address is 01010xxb, where the last two bits of the address can be defined by the application. The definition of this bits can be done by two options. With a pin, where the higher bit is fixed to 0 or the configuration can be defined via EEPROM. Refer to the EEPROM configuration in Section 8.7.

Table 24. Timing parameter I²CL

Parameter	Min	Max	Unit
f_{SCL}	0	5	MHz
$t_{HD;STA}$	80	-	ns
t_{LOW}	100	-	ns
t_{HIGH}	100	-	ns

All information provided in this document is subject to legal disclaimers.

© NXP B.V. 2012. All rights reserved.

Table 24. Timing parameter I²CL

Parameter	Min	Max	Unit
$t_{SU;SDA}$	80	-	ns
$t_{HD;DAT}$	0	50	ns
$t_{SU;DAT}$	0	20	ns
$t_{SU;STO}$	80	-	ns
t_{BUF}	200	-	ns

The pull-up resistor is not required for the I²CL interface. Instead, a on chip buskeeper is implemented in the CLRC663 for SDA of the I²CL interface. This protocol is intended to be used for a point to point connection of devices over a short distance and does not support a bus capability.The driver of the pin must force the line to the desired logic voltage. To avoid that two drivers are pushing the line at the same time following regulations must be fulfilled:

SCL: As there is no clock stretching, the SCL is always under control of the Master.

SDA: The SDA line is shared between master and slave. Therefore the master and the slave must have the control over the own driver enable line of the SDA pin. The following rules must be followed:

- In the idle phase the SDA line is driven high by the master
- In the time between start and stop condition the SDA line is driven by master or slave when SCL is low. If SCL is high the SDA line is not driven by any device
- To keep the value on the SDA line a on chip buskeeper structure is implemented for the line

8.4.5 SAM interface I²C

8.4.5.1 SAM functionality

The CLRC663 implements a dedicated I2C interface to integrate a MIFARE SAM (Secure Access Module) in a very convenient way into applications (e.g. a proximity reader). The SAM can be connected to the microcontroller to operate like a cryptographic co-processor. For any cryptographic task, the microcontroller requests a operation from the SAM, receives the answer and sends it over a host interface (e.g. I2C, SPI) interface to the connected reader IC.

The MIFARE SAM supports a optimized method to integrate the SAM in a very efficient way to reduce the protocol overhead. In this system configuration, the SAM is integrated between the microprocessor and the reader IC, connected by one interface to the reader IC and by another interface to the microcontroller. In this application the microcontroller accesses the SAM using the T=1 protocol and the SAM accesses the reader IC using an I2C interface. As the SAM is directly communicating with reader IC, the communication overhead is reduced. In this configuration, a performance boost of up to 40% can be achieved for a transaction time.

The MIFARE SAM supports applications using MIFARE cards. For multi application purposes an architecture connecting the microcontroller additionally directly to the reader IC is recommended. This is possible by connecting the CLRC663 on one interface (SAM Interface SDA, SCL) with the MIFARE SAM AV2.6 (P5DF081XX/T1AR1070) and by connecting the microcontroller to the S2C or SPI interface.

All information provided in this document is subject to legal disclaimers.

© NXP B.V. 2012. All rights reserved.

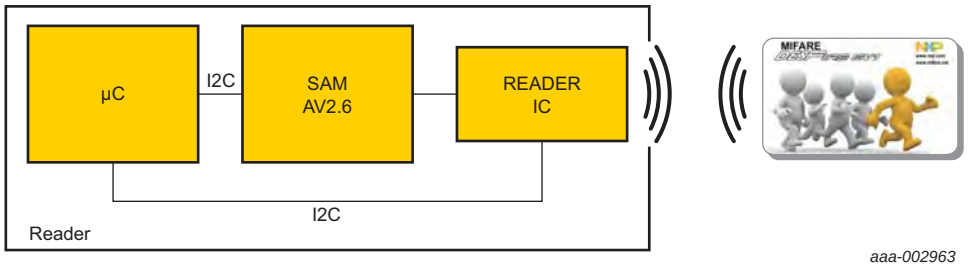

Fig 23. I2C interface enables convenient MIFARE SAM integration

8.4.5.2 SAM connection

The CLRC663 provides an interface to connect a SAM dedicated to the CLRC663. Both interface options of the CLRC663, I^2C or I^2CL can be used for this purpose. The interface option of the SAM itself is configured by a host command sent from the host to the SAM.

The I^2CL interface is intended to be used as connection between two IC's over a short distance. The protocol fulfills the I^2C specification, but does support a single device connected to the bus only.

8.4.6 Boundary scan interface

The CLRC663 provides a boundary scan interface according the IEEE 1149.1. This interface allows to test interconnections without using physical test probes. This is done by test cells, assigned to each pin, which override the functionality of this pin.

To be able to program the test cells, the following commands are supported:

Table 25. Boundary scan command

Value (decimal)	Command	Parameter in	Parameter out
0	bypass	-	-
1	preload	data (24)	-
1	sample	-	data (24)
2	ID code (default)	-	data (32)
3	USER code	-	data (32)
4	Clamp	-	-
5	HIGH Z	-	-
7	extest	data (24)	data (24)
8	interface on/off	interface (1)	-
9	register access read	address (7)	data (8)
10	register access write	address (7) - data (8)	-

The Standard IEEE 1149.1 describes the four basic blocks necessary to use this interface: Test Access Port (TAP), TAP controller, TAP instruction register, TAP data register;

All information provided in this document is subject to legal disclaimers.

© NXP B.V. 2012. All rights reserved.

8.4.6.1 Interface signals

The boundary scan interface implements a four line interface between the chip and the environment. There are three Inputs: Test Clock (TCK); Test Mode Select (TMS); Test Data Input (TDI) and one output Test Data Output (TDO). TCK and TMS are broadcast signals, TDI to TDO generate a serial line called Scan path.

Advantage of this technique is that independent of the numbers of boundary scan devices the complete path can be handled with four signal lines.

The signals TCK, TMS are directly connected with the boundary scan controller. Because these signals are responsible for the mode of the chip, all boundary scan devices in one scan path will be in the same boundary scan mode.

8.4.6.2 Test Clock (TCK)

The TCK pin is the input clock for the module. If this clock is provided, the test logic is able to operate independent of any other system clocks. In addition, it ensures that multiple boundary scan controllers that are daisy-chained together can synchronously communicate serial test data between components. During normal operation, TCK is driven by a free-running clock. When necessary, TCK can be stopped at 0 or 1 for extended periods of time. While TCK is stopped at 0 or 1, the state of the boundary scan controller does not change and data in the Instruction and Data Registers is not lost.

The internal pull-up resistor on the TCK pin is enabled. This assures that no clocking occurs if the pin is not driven from an external source.

8.4.6.3 Test Mode Select (TMS)

The TMS pin selects the next state of the boundary scan controller. TMS is sampled on the rising edge of TCK. Depending on the current boundary scan state and the sampled value of TMS, the next state is entered. Because the TMS pin is sampled on the rising edge of TCK, the IEEE Standard 1149.1 expects the value on TMS to change on the falling edge of TCK.

Holding TMS high for five consecutive TCK cycles drives the boundary scan controller state machine to the Test-Logic-Reset state. When the boundary scan controller enters the Test-Logic-Reset state, the Instruction Register (IR) resets to the default instruction, IDCODE. Therefore, this sequence can be used as a reset mechanism.

The internal pull-up resistor on the TMS pin is enabled.

8.4.6.4 Test Data Input (TDI)

The TDI pin provides a stream of serial information to the IR chain and the DR chains. TDI is sampled on the rising edge of TCK and, depending on the current TAP state and the current instruction, presents this data to the proper shift register chain. Because the TDI pin is sampled on the rising edge of TCK, the IEEE Standard 1149.1 expects the value on TDI to change on the falling edge of TCK.

The internal pull-up resistor on the TDI pin is enabled.

8.4.6.5 Test Data Output (TDO)

The TDO pin provides an output stream of serial information from the IR chain or the DR chains. The value of TDO depends on the current TAP state, the current instruction, and the data in the chain being accessed. In order to save power when the port is not being

All information provided in this document is subject to legal disclaimers.

© NXP B.V. 2012. All rights reserved.

used, the TDO pin is placed in an inactive drive state when not actively shifting out data. Because TDO can be connected to the TDI of another controller in a daisy-chain configuration, the IEEE Standard 1149.1 expects the value on TDO to change on the falling edge of TCK.

8.4.6.6 Data register

According to the IEEE1149.1 standard there are two types of data register defined: bypass and boundary scan

The bypass register enable the possibility to bypass a device when part of the scan path.Serial data is allowed to be transferred through a device from the TDI pin to the TDO pin without affecting the operation of the device.

The boundary scan register is the scan-chain of the boundary cells. The size of this register is dependent on the command.

8.4.6.7 Boundary scan cell

The boundary scan cell opens the possibility to control a hardware pin independent of its normal use case. Basically the cell can only do one of the following: control, output and input.

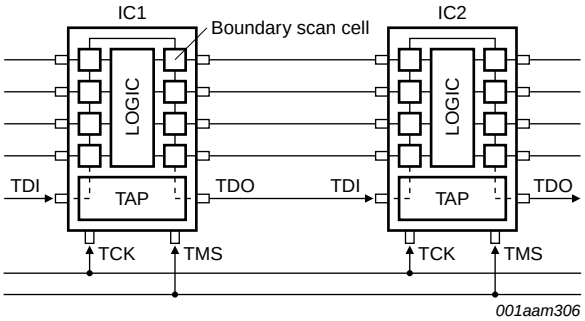

Fig 24. Boundary scan cell path structure

8.4.6.8 Boundary scan path

This chapter shows the boundary scan path of the CLRC663.

Table 26. Boundary scan path of the CLRC663

Number (decimal)	Cell	Port	Function
23	BC_1	-	Control
22	BC_8	CLKOUT	Bidir
21	BC_1	-	Control
20	BC_8	SCL2	Bidir
19	BC_1	-	Control
18	BC_8	SDA2	Bidir
17	BC_1	-	Control
16	BC_8	IFSEL0	Bidir
15	BC_1	-	Control
14	BC_8	IFSEL1	Bidir

All information provided in this document is subject to legal disclaimers.

© NXP B.V. 2012. All rights reserved.

Table 26. Boundary scan path of the CLRC663

Number (decimal)	Cell	Port	Function
13	BC_1	-	Control
12	BC_8	IF0	Bidir
11	BC_1	-	Control
10	BC_8	IF1	Bidir
9	BC_1	-	Control
8	BC_8	IF2	Bidir
7	BC_1	IF2	Output2
6	BC_4	IF3	Bidir
5	BC_1	-	Control
4	BC_8	IRQ	Bidir
3	BC_1	-	Control
2	BC_8	SIGIN	Bidir
1	BC_1	-	Control
0	BC_8	SIGOUT	Bidir

Refer to the CLRC663 BSDL file.

8.4.6.9 Boundary Scan Description Language (BSDL)

All of the boundary scan devices have a unique boundary structure which is necessary to know for operating the device. Important components of this language are:

- available test bus signal
- compliance pins
- command register
- data register
- boundary scan structure (number and types of the cells, their function and the connection to the pins.)

The CLRC663 is using the cell BC_8 for the IO-Lines. The I^2C Pin is using a BC_4 cell. For all pad enable lines the cell BC1 is used.

The manufacturer's identification is 02Bh.

- attribute IDCODEISTER of CLRC663: entity is "0001" and -- version
- "0011110010000010b" and -- part number (3C82h)
- "00000010101b" and -- manufacturer (02Bh)
- "1b"; -- mandatory

The user code data is coded as followed:

- product ID (3 bytes)
- version

These four bytes are stored as the first four bytes in the EEPROM.

All information provided in this document is subject to legal disclaimers.

© NXP B.V. 2012. All rights reserved.

8.4.6.10 Non-IEEE1149.1 commands

Interface on/off: With this command the host/SAM interface can be deactivated and the Read and Write command of the boundary scan interface is activated. (Data = 1). With Update-DR the value is taken over.

Register Access Read: At Capture-DR the actual address is read and stored in the DR. Shifting the DR is shifting in a new address. With Update-DR this address is taken over into the actual address.

All information provided in this document is subject to legal disclaimers.

© NXP B.V. 2012. All rights reserved.

8.5 Buffer

8.5.1 Overview

An 512 × 8-bit FIFO buffer is implemented in the CLRC663. It buffers the input and output data stream between the host and the internal state machine of the CLRC663. Thus, it is possible to handle data streams with lengths of up to 512 bytes without taking timing constraints into account. The FIFO can also be limited to a size of 255 byte. In this case all the parameters (FIFO length, Watermark...) require a single byte only for definition. In case of a 512 byte FIFO length the definition of this values requires 2 bytes.

8.5.2 Accessing the FIFO buffer

When the μ-Controller starts a command, the CLRC663 may, while the command is in progress, access the FIFO-buffer according to that command. Physically only one FIFO-buffer is implemented, which can be used in input and output direction. Therefore the μ-Controller has to take care, not to access the FIFO buffer in a way that corrupts the FIFO data.

8.5.3 Controlling the FIFO buffer

Besides writing to and reading from the FIFO buffer, the FIFO-buffer pointers might be reset by setting the bit FIFOFlush in FIFOControl to 1. Consequently, the FIFOLevel bits are set to logic 0, the actually stored bytes are not accessible any more and the FIFO buffer can be filled with another 512 bytes (or 255 bytes if the bit FIFOSize is set to 1) again.

8.5.4 Status Information about the FIFO buffer

The host may obtain the following data about the FIFO-buffers status:

- Number of bytes already stored in the FIFO-buffer. Writing increments, reading decrements the FIFO level: FIFOLength in register FIFOLength (and FIFOControl Register in 512 byte mode)
- Warning, that the FIFO-buffer is almost full: HiAlert in register FIFOControl according to the value of the water level in register WaterLevel (Register 02h bit [2], Register 03h bit[7:0])
- Warning, that the FIFO-buffer is almost empty: LoAlert in register FIFOControl according to the value of the water level in register WaterLevel (Register 02h bit [2], Register 03h bit[7:0])
- FIFOOvl bit indicates, that bytes were written to the FIFO buffer although it was already full: ErrIrq in register Irq0.

WaterLevel is one single value defining both HiAlert (counting from the FIFO top) and LoAlert (counting from the FIFO bottom). The CLRC663 can generate an interrupt signal if:

- LoAlertIRQEn in register IRQ0En is set to logic 1 it will activate pin IRQ when LoAlert in the register FIFOControl changes to 1.
- HiAlertIRQEN in register IRQ0En is set to logic 1 it will activate pin IRQ when HiAlert in the register FIFOControl changes to 1.

All information provided in this document is subject to legal disclaimers.

© NXP B.V. 2012. All rights reserved.

The bit HiAlert is set to logic 1 if maximum water level bytes (as set in register WaterLevel) or less can be stored in the FIFO-buffer. It is generated according to the following equation:

$$HiAlert = (FiFoSize - FiFoLength) \leq WaterLevel \quad (2)$$

The bit LoAlert is set to logic 1 if water level bytes (as set in register WaterLevel) or less are actually stored in the FIFO-buffer. It is generated according to the following equation:

$$LoAlert = FIFOLength \leq WaterLevel \quad (3)$$

All information provided in this document is subject to legal disclaimers.

© NXP B.V. 2012. All rights reserved.

8.6 Analog interface and contactless UART

8.6.1 General

The integrated contactless UART supports the external host online with framing and error checking of the protocol requirements up to 848 kbit/s. An external circuit can be connected to the communication interface pins SIGIN and SIGOUT to modulate and demodulate the data.

The contactless UART handles the protocol requirements for the communication schemes in co-operation with the host. The protocol handling itself generates bit- and byte-oriented framing and handles error detection like Parity and CRC according to the different contactless communication schemes.

The size, the tuning of the antenna, and the supply voltage of the output drivers have an impact on the achievable field strength. The operating distance between reader and card depends additionally on the type of card used.

8.6.2 TX transmitter

The signal delivered on pin TX1 and pin TX2 is the 13.56 MHz carrier modulated by an envelope signal for energy and data transmission. It can be used to drive an antenna directly, using a few passive components for matching and filtering, see Section 14 “Application information”. The signal on TX1 and TX2 can be configured by the register DrvMode, see Section 9.8.1 “TxMode”.

The modulation index can be set by the TxAmp.

Following figure shows the general relations during modulation

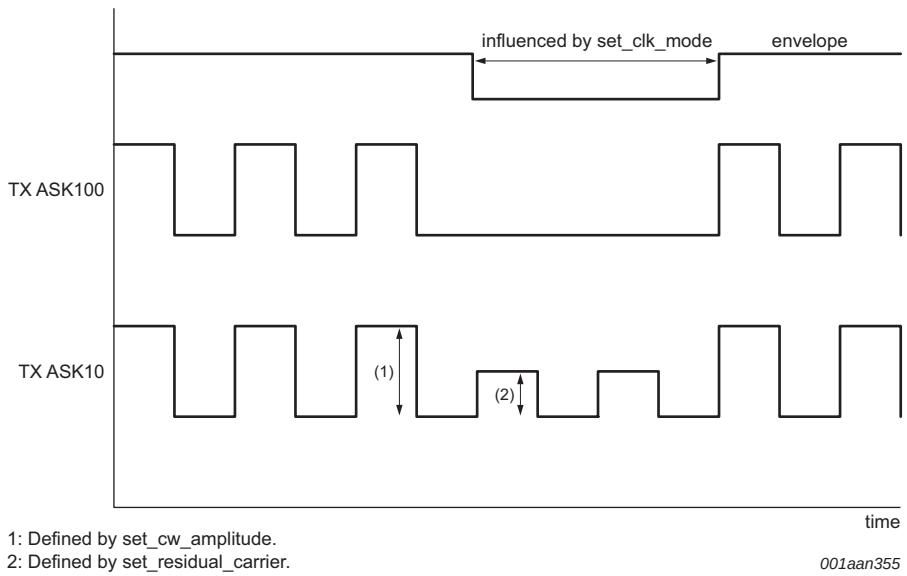

Fig 25. General dependences of modulation

Note: When changing the continuous wave, the residual carrier also changes, while the modulation index remains the same.

All information provided in this document is subject to legal disclaimers.

© NXP B.V. 2012. All rights reserved.

The registers Section 9.8 and Section 9.10 control the data rate, the framing during transmission and the setting of the antenna driver to support the requirements at the different specified modes and transfer speeds.

Table 27. Settings for TX1 and TX2

TxClkMode (binary)	Tx1 and TX2 output	Remarks
000	High impedance	-
001	0	output pulled to 0 in any case
010	1	output pulled to 1 in any case
110	RF high side push	open drain, only high side (push) MOS supplied with clock, clock parity defined by invtx; low side MOS is off
101	RF low side pull	open drain, only low side (pull) MOS supplied with clock, clock parity defined by invtx; high side MOS is off
111	13.56 MHz clock derived from 27.12 MHz quartz divided by 2	push/pull Operation, clock polarity defined by invtx; setting for 10% modulation

Register TXamp and the bits for set_residual_carrier can define the modulation index:

Table 28. Setting residual carrier and modulation index by TXamp.set_residual_carrier

set_residual_carrier (decimal)	residual carrier [%]	modulation index [%]
0	99	0.5
1	98	1.0
2	96	2.0
3	94	3.1
4	91	4.7
5	89	5.8
6	87	7.0
7	86	7.5
8	85	8.1
9	84	8.7
10	83	9.3
11	82	9.9
12	81	10.5
13	80	11.1
14	79	11.7
15	78	12.4
16	77	13.0
17	76	13.6
18	75	14.3
19	74	14.9
20	72	16.3
21	70	17.6
22	68	19.0

All information provided in this document is subject to legal disclaimers.

© NXP B.V. 2012. All rights reserved.

Table 28. Setting residual carrier *...continued* **and modulation index by**

set_residual_carrier (decimal)	residual carrier [%]	modulation index [%]
23	65	21.2
24	60	25.0
25	55	29.0
26	50	33.3
27	45	37.9
28	40	42.9
29	35	48.1
30	30	53.8
31	25	60.0

Note: When VDD(TVDD) < 5 V it is not recommended to use a residual carrier < 50 %

8.6.2.1 Overshoot protection

The CLRC663 provides an overshoot protection for 100% ASK to avoid overshoots during a PCD communication. Therefore two timers overshoot_t1 and overshoot_t2 can be used.

During the timer overshoot_t1 runs an amplitude defined by set_cw_amplitude bits is provided to the output driver. Followed by an amplitude denoted by set_residual_carrier bits with the duration of overshoot_t2.

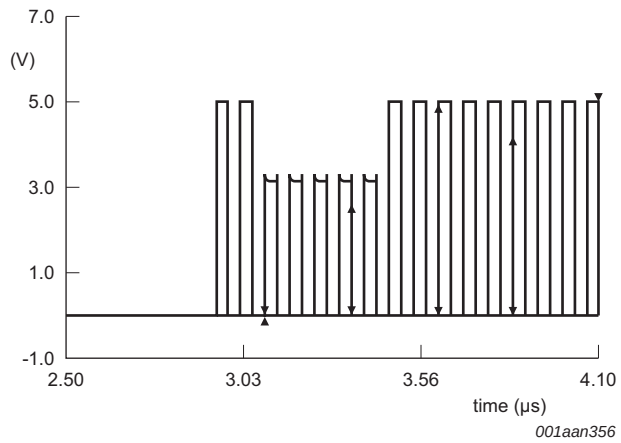

Fig 26. Example 1: overshoot_t1 = 2d; overhoot_t2 = 5d.

All information provided in this document is subject to legal disclaimers.

© NXP B.V. 2012. All rights reserved.

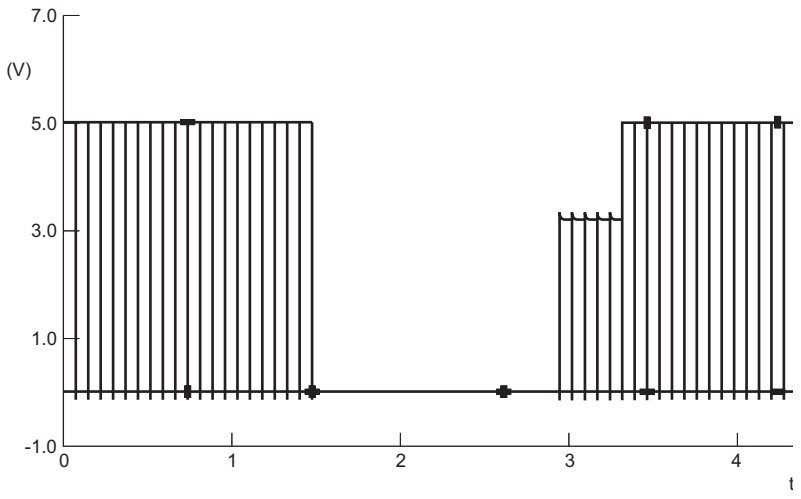

Fig 27. Example 2: overshoot_t1 = 0d; overhoot_t2 = 5d

8.6.2.2 Bit generator

The default coding of a data stream is done by using the Bit-Generator. It is activated when the value of TxFrameCon.DCodeType is set to 0000 (bin). The Bit-Generator encodes the data stream byte-wise and can apply the following encoding steps to each data byte.

1. Add a start-bit of specified type at beginning of every byte
2. Add a stop-bit and EGT bits of a specified type. The maximum number of EGT bit is 6, only full bits are supported
3. Add a parity-bit of a specified type
4. TxFirstBits (skips a given number of bits at the beginning of the first byte in a frame)
5. TxLastBits (skips a given number of bits at the end of the last byte in a frame)
6. Encrypt data-bit (MIFARE encryption)

TxFirstBits and TxLastBits can be used at the same time. If only a single data byte is sent, it must be ensured that the range of TxFirstBits and TxLastBits do not overlap. It is not possible to skip more than 8 bit of a single byte! ((8 - TxFirstBits) + (8 - TxLastBits)) < 8

By default, data bytes are always treated LSB first. To make use of a MSB first coding, the TxMSBFirst in the register CLCON1 needs to be set.

8.6.3 Receiver circuitry

8.6.3.1 General

The CLRC663 features a versatile quadrature receiver architecture with fully differential signal input at RXP and RXN. It can be configured to achieve optimum performance for reception of various 13.56 MHz based protocols.

For all processing units various adjustments can be made to obtain optimum performance.

All information provided in this document is subject to legal disclaimers.

© NXP B.V. 2012. All rights reserved.

8.6.3.2 Block diagram

Figure 28 shows the block diagram of the receiver circuitry. The receiving process includes several steps. First the quadrature demodulation of the carrier signal of 13.56 MHz is done. Several tuning steps in this circuit are possible.

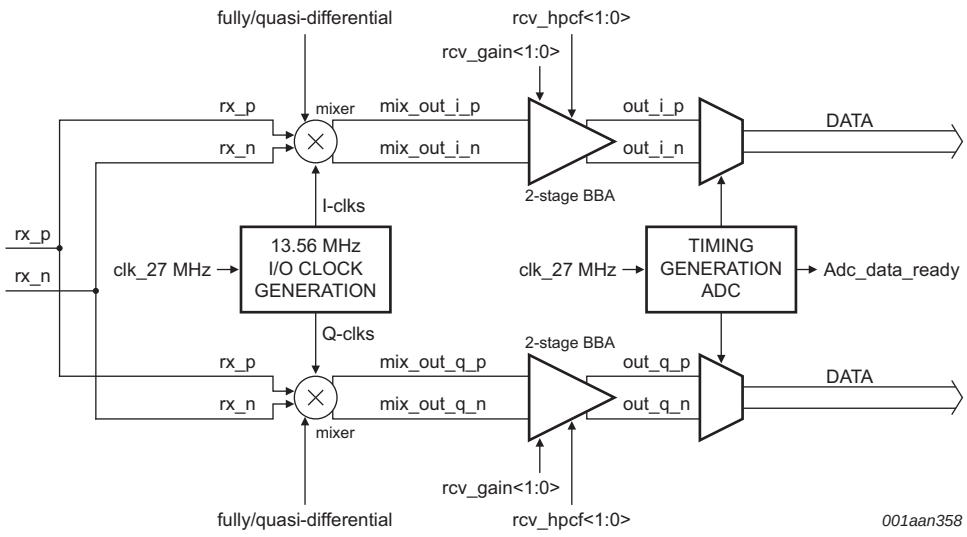

Fig 28. Block diagram of receiver circuitry

The receiver can also be operated in a single ended mode. In this case the Rcv_RX_single has to be set. In the single ended use case two receiver pins RXP and RXN need to be connected and will provide a single ended signal to the receiver circuitry.

When using the receiver in a single ended mode the reading distance will be decreased compared to a double ended antenna implementation.

Table 29. Configuration for single or differential receiver

Mode	rcv_rx_single	pins RXP and RXN
Fully differential	0	provide differential signal from differential antenna by separate rx-coupling branches
Quasi differential	1	connect RXP and RXN together and provide single ended signal from antenna by a single rx-coupling branch

The quadrature-demodulator uses two different clocks, Q-clock and I-clock, with a phase shift of 90° between them. Both resulting baseband signals are amplified, filtered and forwarded to a correlation circuitry.

The typical application is intended to implement the Fully differential mode and will deliver maximum reader/writer distance. The Quasi differential mode can be used together with dedicated antenna topologies that allow a reduction of matching components at the cost of overall reading performance.

All information provided in this document is subject to legal disclaimers.

© NXP B.V. 2012. All rights reserved.

8.6.4 Active antenna concept

Two main blocks are implemented in the CLRC663. A digital circuitry, comprising state machines, coder and decoder logic and an analog circuitry with the modulator and antenna drivers, receiver and amplification circuitry. For example, the interface between these two blocks can be configured in the way, that the interfacing signals may be routed to the pins SIGIN and SIGOUT. The most important use of this topology is the active antenna concept where the digital and the analog blocks are separated. This opens the possibility to connect e.g. an additional digital block of another CLRC663 device with a single analog antenna front-end.

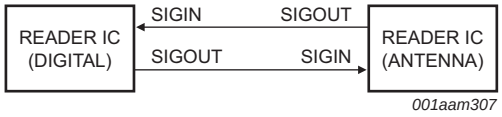

Fig 29. Block diagram of the active Antenna concept

The Table 30 and Table 31 describe the necessary register configuration for the use case active antenna concept.

Table 30. Register configuration of CLRC663 active antenna concept (DIGITAL)

Register	Value (binary)	Description
SigOut.SigOutSel	0100	TxEnvelope
Rcv.SigInSel	10 11	Receive over SigIn (ISO/IEC14443A) Receive over SigIn (Generic Code)
DrvCon.TxSel	00	Low (idle)

Table 31. Register configuration of CLRC663 active antenna concept (Antenna)

Register	Value (binary)	Description
SigOut.SigOutSel	0110 0111	Generic Code (Manchester) Manchester with Subcarrier (ISO/IEC14443A)
Rcv.SigInSel	01	Internal
DrvCon.TxSel	10	External (SigIn)
RxCtrl.RxMultiple	1	RxMultiple on

The interface between these two blocks can be configured in the way, that the interfacing signals may be routed to the pins SIGIN and SIGOUT (see Figure 30 “Overview SIGIN/SIGOUT Signal Routing”).

This topology supports, that some parts of the analog part of the CLRC663 may be connected to the digital part of another device.

The switch SigOutSel in registerSigOut can be used to measure signals. This is especially important during the design In phase or for test purposes to check the transmitted and received data.

However, the most important use of SIGIN/SIGOUT pins is the active antenna concept. An external active antenna circuit can be connected to the digital circuit of the CLRC663. SigOutSel has to be configured in that way that the signal of the internal Miller Coder is sent to SIGOUT pin (SigOutSel = 4). SigInSel has to be configured to receive Manchester signal with sub-carrier from SIGIN pin (SigInSel = 1).

All information provided in this document is subject to legal disclaimers.

© NXP B.V. 2012. All rights reserved.

It is possible, to connect a passive antenna to pins TX1, TX2 and RX (via the appropriate filter and matching circuit) and at the same time an active antenna to the pins SIGOUT and SIGIN. In this configuration, two RF-parts may be driven (one after another) by a single host processor.

All information provided in this document is subject to legal disclaimers.

© NXP B.V. 2012. All rights reserved.

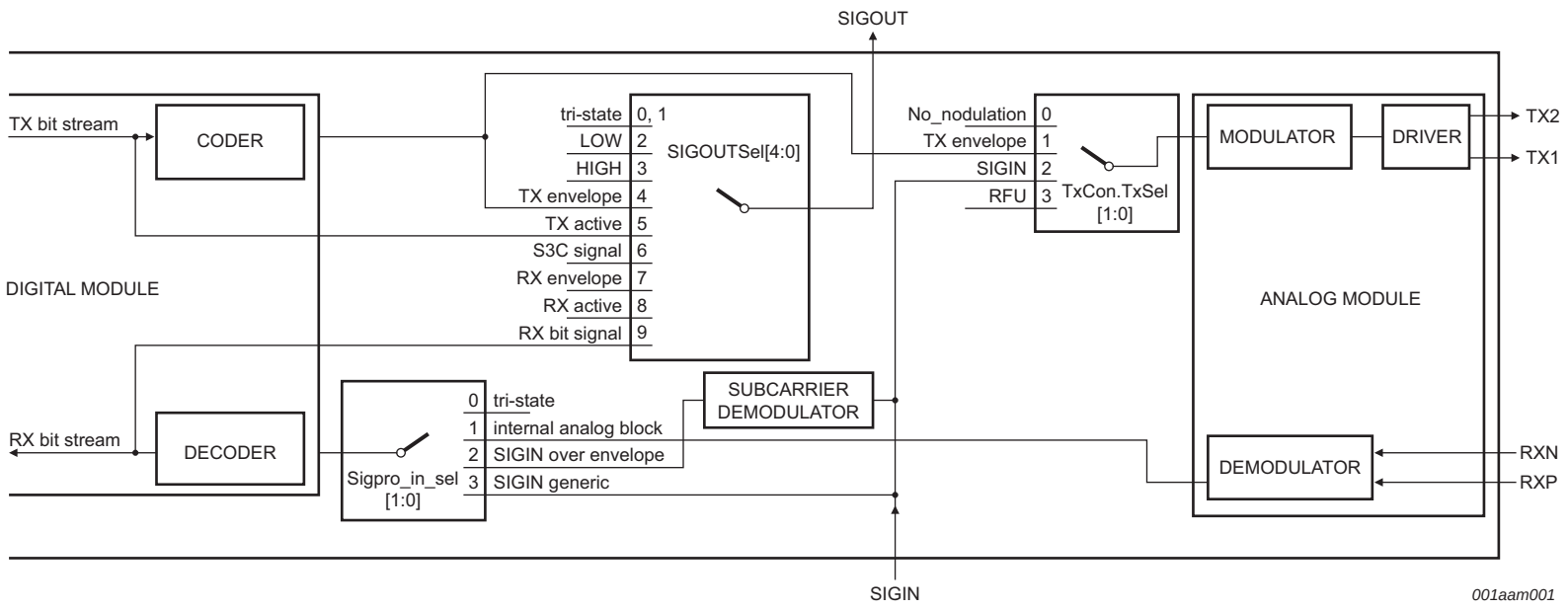

Fig 30. Overview SIGIN/SIGOUT Signal Routing

All information provided in this document is subject to legal disclaimers.
© NXP B.V. 2012. All rights reserved.

8.6.5 Symbol generator

The symbol generator is used to create various protocol symbols. These can be e.g. SOF or EOF symbols as they are used by the ISO14443 protocols or proprietary protocol symbols like the CS symbol as used by the ICODE EPC protocol.

Symbols are defined by means of the symbol definition registers and the mode registers. Four different symbols can be used. Two of them, Symbol0 and Symbol1 have a maximum pattern length of 16 bit and feature a burst length of up to 256 bits of either logic “0” or logic “1”. The Symbol2 and Symbol3 are limited to 8 bit pattern length and do not support a burst.

The definition of symbol patterns is done by writing the bit sequence of the pattern to the appropriate register. The last bit of the pattern to be sent is located at the LSB of the register. By setting the symbol length in the symbol-length register (TxSym10Len and TxSym32Len) the definition of the symbol pattern is completed. All other bits at bit-position higher than the symbol length in the definition register are ignored. (Example: length of Symbol2 = 5, bit7 and bit6 are ignored, bit5 to bit0 define the symbol pattern, bit5 is sent first)

Which symbol-pattern is sent can be configured in the TxFrameCon register. Symbol0, Symbol1 and Symbol2 can be sent before data packets, Symbol1, Symbol2 and Symbol3 can be sent after data packets. Each symbol is defined by a set of registers. Symbols are configured by a pair of registers. Symbol0 and Symbol1 share the same configuration and Symbol2 and Symbol3 share the same configuration. The configuration includes setting of bit-clock- and subcarrier-frequency, as well as selection of the pulse type/length and the envelope type.

8.7 Memory

8.7.1 Memory overview

The CLRC663 implements three different memories: EEPROM, FIFO and Registers.

At startup, the initialization of the registers which define the behavior of the IC is performed by an automatic copy of an EEPROM area (read/write EEPROM section1 and section2, register reset) into the registers. The behavior of the CLRC663 can be changed by executing the command LoadProtocol, which copies a selected default protocol from the EEPROM (read only EEPROM section4, register Set Protocol area) into the registers.

The read/write EEPROM section2 can be used to store any user data or predefined register settings. These predefined settings can be copied with the command "LoadRegister" into the internal registers.

The FIFO is used as Input/Out buffer and is able to improve the performance of a system with limited interface speed.

All information provided in this document is subject to legal disclaimers.

© NXP B.V. 2012. All rights reserved.

8.7.2 EEPROM memory organization

The CLRC663 has implemented a EEPROM non-volatile memory with a size of 8 kB.The EEPROM is organized in pages of 64 bytes. One page of 64 bytes can be programmed at a time. Defined purposes had been assigned to specific memory areas of the EEPROM, which are called Sections. Five sections 0..4 with different purpose do exist.

Table 32. EEPROM memory organization

Section	Page	Byte addresses	Access rights	Memory content
0	0	00 to 31	r	product information and configuration
		32 to 63	r/w	product configuration
1	1 to 2	64 to 191	r/w	register reset
2	3 to 95	192 to 6143	r/w	free
3	96 to 111	6144 to 7167	w	MIFARE key
4	112 to 128	7168 to 8191	r	Register Set Protocol (RSP)

The following figure show the structure of the EEPROM:

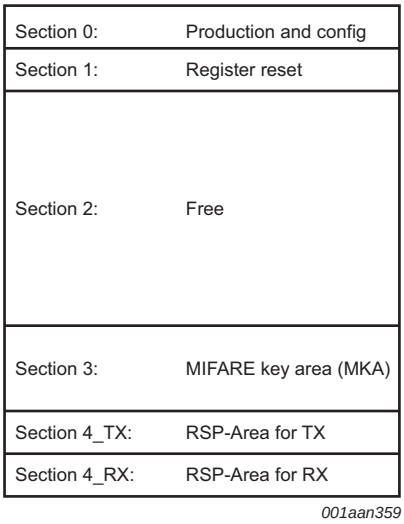

Fig 31. Sector arrangement of the EEPROM

All information provided in this document is subject to legal disclaimers.

© NXP B.V. 2012. All rights reserved.

8.7.2.1 Product information and configuration - Page 0

The first EEPROM page includes production data as well as configuration information.

Table 33. Production area (Page 0)

Address (Hex.)	0	1	2	3	4	5	6	7
00	ProductID			Version	ManufacturerData			
08	ManufacturerData							
10	ManufacturerData							
18	ManufacturerData							

ProductID: Identifier for this CLRC663 product

Version: Silicon Version identifier.

ManufacturerData: This data is programmed during production. The content is not intended to be used by any application and might be not the same for different devices. Therefore this content needs to be considered to be undefined.

Table 34. Configuration area (Page 0)

Address (Hex.)	0	1	2	3	4	5	6	7
20	I^2C_Address	Interface	I^2C SAM_Address	DefaultProtRx	DefaultProtTx	-	TxCRCPreset	
28	RxCRCPreset		-	-	-	-	-	-
30	-							
38	-							

I^2C-Address: Two possibilities exist to define the address of the I^2C interface. This can be done either by configuring the pins IF0, IF2 (address is then 10101xx, xx is defined by the interface pins IF0, IF2) or by writing value into the I^2C address area. The selection, which of this 2-information pin configuration or EEPROM content - is used as I^2C-address is done at EEPROM address 21h (Interface, bit4)

Interface: This section describes the interface byte configuration.

Table 35. Interface byte

Bit	7	6	5	4	3	2	1	0
	I^2C_HSP	-	-	I2C_Address	Boundary Scan	Host		
access rights	r/w	RFU	RFU	r/w	r/w		r/w	

All information provided in this document is subject to legal disclaimers.

© NXP B.V. 2012. All rights reserved.

Table 36. Interface bits

Bit	Symbol	Description
7	I^2C_HSP	when cleared, the high speed mode is used when set, the high speed+ mode is used (default)
6, 5	RFU	-
4	I^2C_Address	when cleared, the pins are used (default) when set, the EEPROM is used
3	Boundary Scan	when cleared, the boundary scan interface is ON (default) when set, the boundary scan is OFF
2 to 0	Host	000b - RS232 001b - I^2C 010b - SPI 011b - I^2CL 1xxb - pin selection

I^2C_SAM_Address: The I^2C SAM Address is always defined by the EEPROM content.

: The Register Set Protocol (RSP) Area contains settings for the TX registers (16 bytes) and for the RX registers (8 bytes).

Table 37. Tx and Rx arrangements in the register set protocol area

Section								
Section 4 TX	Tx0		Tx1		TX2		Tx3	
Section 4 TX	Tx4		Tx5		TX6		TX7	
Section 4 Rx	RX0	RX1	RX2	RX3	RX4	RX5	RX6	RX7
Section 4 Rx	RX8	RX9	RX10	RX11	RX12	RX13	RX14	RX15

TxCrcPreset: The data bits send by the analog module of the are automatically extended by a CRC.

8.7.3 EEPROM initialization content LoadProtocol

The CLRC663 EEPROM is initialized at production with default values which are used to reset the registers of the CLRC663 by copying the EEprom content to the registers. Note that the addresses used for copying reset values from EEprom to registers are dependent on the configured protocol and can be changed by the user.

Table 38. Register reset values (Hex.) (Page0)

Address	0	1	2	3	4	5	6	7
Function	Product ID			Version	Factory trim values			
00	00	01	01	XX	XX	XX	XX	XX
Function	Factory trim values							
08	XX	XX	XX	XX	XX	XX	XX	XX
Function	TrimLPO	Factory trim values						
10	XX	XX	XX	XX	XX	XX	XX	XX

All information provided in this document is subject to legal disclaimers.

© NXP B.V. 2012. All rights reserved.

Table 38. Register reset values (Hex.) (Page0) *...continued*

Address	0	1	2	3	4	5	6	7
Function	Factory trim values							
18....	XX	XX	XX	XX	XX	XX	XX	XX
	Factory trim values							
....38	XX	XX	XX	XX	XX	XX	XX	XX

The register reset values are configuration parameters used after startup of the IC. They can be changed to modify the default behavior of the device. In addition to this register reset values, the possibility to load settings for various protocols defined by the user. The load protocol command is used for this purpose.

Table 39. Register reset values (Hex.)(Page1 and page 2)

Address	0	1	2	3	4	5	6	7
	Command	HostCtrl	FiFoControl	WaterLevel	FiFoLength	FiFoData	IRQ0	IRQ1
40	40	00	80	05	00	00	00	00
	Error_Reg	Status_Reg	RxBitCtrl	RxColl	TControl	T0ReloadHi	T0ReloadLo	T0Counter ValHi
48	10	00	00	00	00	00	00	00
	T0Counter ValLo	T1Control	T1ReloadHi	T1ReloadLo	T1Counter ValHi	T1Counter ValLo	T2Control	T2ReloadHi
50	00	08	00	00	00	00	08	00
	T2ReloadLo	T2Counter ValHi	T2Counter ValLo	T3Control	T3ReloadHi	T3ReloadLo	T3Counter ValHi	T3Counter ValLo
58	00	00	00	80	00	00	00	00
	T3ReloadHi	T3ReloadLo	T4Control	T4ReloadHi	T4ReloadLo	T4Counter ValHi	T4Counter ValLo	
60	80	00	00	00	00	80	00	00
	DrvMode	TxAmp	DrvCon	Txl	TxCRC Preset	RxCRC Preset	TxDataNum	TxModWith
68	86	15	11	06	18	18	0F	27
	TxSym10 BurstLen	TxWaitCtrl	TxWaitLo	FrameCon	RxSofD	RxCtrl	RxWait	RxThres hold
70	00	C0	12	CF	00	04	90	3F
	RcvReg	RxAna	RFU	SerialSpeed	LPO_trimm	PLL_Ctrl	PLL_Div	LPCD_QMi n
78	12	0A	00	7A	80	04	20	48
	LPCD_ QMax	LPCD_IMin	LPCD _result_I	LPCD _result_Q	PadEn	PadOut	PadIn	SigOut
80	12	88	00	00	00	00	00	00
	TxBitMod	RFU	TxDataCon	TxDataMod	TxSymFreq	TxSym0H	TySym0L	TxSym1H

All information provided in this document is subject to legal disclaimers.

© NXP B.V. 2012. All rights reserved.

8.8 Clock generation

8.8.1 Crystal oscillator

The clock applied to the CLRC663 acts as time basis for generation of the carrier sent out at TX and for the quadrature mixer I and Q clock generation as well as for the coder and decoder of the synchronous system. Therefore stability of the clock frequency is an important factor for proper performance. To obtain highest performance, clock jitter has to be as small as possible. This is best achieved by using the internal oscillator buffer with the recommended circuitry.

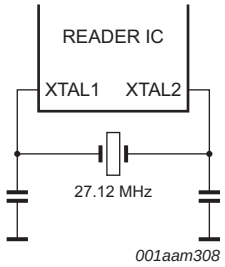

Fig 32. Quartz connection

Table 40. Crystal requirements recommendations

Symbol	Parameter	Conditions	Min	Typ	max	Unit
f_{xtal}	crystal frequency		-	27.12	-	MHz
$\Delta f_{xtal}/f_{xtal}$	relative crystal frequency variation		–250	-	+250	ppm
ESR	equivalent series resistance		-	50	100	Ω
C_L	load capacitance		-	10	-	pF
P_{xtal}	crystal power dissipation		-	50	100	μW

8.8.2 IntegerN PLL clock line

The CLRC663 is able to provide a clock with configurable frequency at CLKOUT from 1 MHz to 24 MHz (PLL_Ctrl and PLL_DIV). There it can serve as a clock source to a microcontroller which avoids the need of a second crystal oscillator in the reader system. Clock source for the IntegerN-PLL is the 27.12 MHz crystal oscillator.

Two dividers are determining the output frequency. First a feedback integer-N divider configures the VCO frequency to be N × fin/2 (control signal pll_set_divfb). As supported Feedback Divider Ratios are 23, 27 and 28, VCO frequencies can be 23 × fin / 2 (312 MHz), 27 × fin / 2 (366 MHz) and 28 × fin / 2 (380 MHz).

The VCO frequency is divided by a factor which is defined by the output divider (pll_set_divout). Table 41 “Divider values for selected frequencies using the integerN PLL” shows the accuracy achieved for various frequencies (integer multiples of 1 MHz and some typical RS232 frequencies) and the divider ratios to be used. The register bit ClkOutEn enables the clock at CLKOUT pin.

The following formula can be used to calculate the output frequency:

All information provided in this document is subject to legal disclaimers.

© NXP B.V. 2012. All rights reserved.

f_{out} = 13.56 MHz × PLLDiv_FB /PLLDiv_Out

Table 41. Divider values for selected frequencies using the integerN PLL

Frequency [MHz]	4	6	8	10	12	20	24	1.8432	3.6864
PLLDiv_FB	23	27	23	28	23	28	23	28	28
PLLDiv_Out	78	61	39	38	26	19	16	206	103
accuracy [%]	0.04	0.03	0.04	0.08	0.04	0.08	0.04	0.01	0.01

8.8.3 Low-Power Oscillator (LPO)

The Low-Power Oscillator (LPO) is implemented to drive a wake-up counter (WUC). This wakes up the system in regular time intervals and eases the design of a reader that is regularly polling for card presence or implements a low-power card detection.

The LPO is trimmed during production. Unless a high accuracy of the LPO is required by the application and the device is operated in an environment with changing ambient temperatures, trimming of the LPO is not required. For a typical application making use of the LPO for wake up from power down, the trim values set during production can be used. Optional trimming is supported by a digital state machine which compares LPO-clock to a reference clock. As reference the 13.56 MHz crystal clock is available.

Table 42. Setting of lpo_trimm [7:0]

value (decimal)	LPO clocks
4	16
5	32
6	64
7	128

All information provided in this document is subject to legal disclaimers.

© NXP B.V. 2012. All rights reserved.

8.9 Power management

8.9.1 Supply concept

The CLRC663 is supplied by V_{DD} (Supply Voltage), PVDD (Pad Supply) and TVDD (Transmitter Power Supply). These three voltages are independent from each other.

To connect the CLRC663 to a Microcontroller supplied by 3.3 V, PVDD and V_{DD} shall be at a level of 3.3 V as well, TVDD can be in a range from 3.3 V to 5.0 V. A higher supply voltage at TVDD will result in a higher field strength.

Independent of the voltage it is recommended to buffer these supplies with blocking capacitances close to the terminals of the package. V_{DD} and PVDD are recommended to be blocked with a capacitor of 100 nF min, TVDD is recommended to be blocked with 2 capacitors, 100 nF parallel to 1.0 μF

AVDD and DVDD are not supply input pins. They are output pins and shall be connected to blocking capacitors 470 nF each.

8.9.2 Power reduction mode

8.9.2.1 Power-down

A hard power-down is enabled with HIGH level on pin PDOWN. This turns off the internal 1.8 V voltage regulators for the analog and digital core supply as well as the oscillator. All digital input buffers are separated from the input pads and clamped internally (except pin PDOWN itself). The output pins are switched to high impedance.

To leave the power-down mode the level at the pin PDOWN as to be set to LOW. This will start the internal start-up sequence.

8.9.2.2 Standby mode

The standby mode is entered immediately after setting the bit PowerDown in the register Command. All internal current sinks are switched off except the LFO. Voltage references and voltage regulators will be set into stand-by mode.

In opposition to the power-down mode, the digital input buffers are not separated by the input pads and keep their functionality. The digital output pins do not change their state.

During standby mode, all registers values, the FIFO's content and the configuration itself will keep its current content.

To leave the standby mode the bit PowerDown in the register Command is cleared. This will trigger the internal start-up sequence. The reader IC is in full operation mode again when the internal start-up sequence is finalized (the typical duration is 15 us).

Alternatively, a value of 55h can be sent to the CLRC663 using the RS232 interface to leave the standby mode. Then read accesses shall be performed at address 00h until the device returns the content of this address. The return of the content of address 00h indicates that the device is ready to receive further commands and the internal start-up sequence is finalized.

8.9.2.3 Modem off mode

When the ModemOff bit in the register Control is set the antenna transmitter and the receiver are switched off.

All information provided in this document is subject to legal disclaimers.

© NXP B.V. 2012. All rights reserved.

To leave the modem off mode clears the ModemOff bit in the register Control.

8.9.3 Low-Power Card Detection (LPCD)

The low-power card detection is an energy saving modus when the CLRC663 is not fully powered permanently.

The LPCD works in two phases. First the standby phase is controlled by the wake-up counter (WUC), which defines the duration of the standby of the CLRC663. Second phase is the detection-phase. In this phase the values of the I and Q channel are detected and stored in the register map. (LPCD_I_Result, LPCD_Q_Result).This time period can be handled with Timer3. The value is compared with the min/max values in the registers (LPCD_IMin, LPCD_IMax; LPCD_QMin, LPCD_QMax). If it exceeds the limits, a LPCDIrq is raised.

After the command LPCD the standby of the CLRC663 is activated, if selected. The wake-up Timer4 can activate the system after a given time. For the LPCD it is recommended to set T4AutoWakeUp and T4AutoRestart, to start the timer and then go to standby. If a card is detected the timer stops and the communication can be started. If T4AutoWakeUp is not set, the IC will not enter Standby mode in case no card is detected.

8.9.4 Reset and start-up time

A 10 μs constant high level at the PDOWN pin starts the internal reset procedure.

The following figure shows the internal voltage regulator:

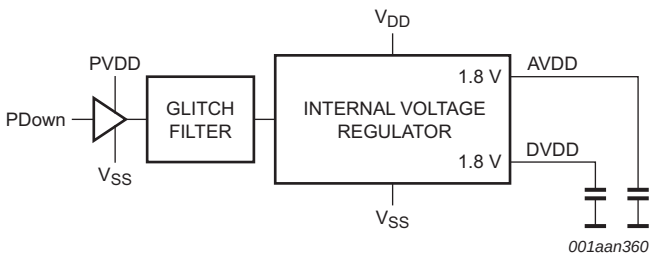

Fig 33. Internal PDown to voltage regulator logic

This internal procedure consists of two phases:

- Power on reset
- Startup time

When the CLRC663 has finished this two phases the reader IC is in Full mode and is ready to be used. Refer to Section 13.1 “Timing characteristics”

All information provided in this document is subject to legal disclaimers.

© NXP B.V. 2012. All rights reserved.

8.10 Command set

8.10.1 General

The behavior is determined by a state machine capable to perform a certain set of commands. By writing the according command-code to register Command the command is executed.

Arguments and/or data necessary to process a command, are exchanged via the FIFO buffer.

- A data transmission of the TxEncoder can be started by a command. When started, the communication is executed as defined in the TxFrameCon register. Therefore a communication frame can consist of a start-symbol, a data-stream, and followed by an end-symbol.
- Each command that needs a certain number of arguments will start processing only when it has received the correct number of arguments via the FIFO buffer.
- The FIFO buffer is not cleared automatically at command start. Therefore, it is recommended to write the command arguments and/or the data bytes into the FIFO buffer and start the command afterwards.
- Each command may be interrupted by the host by writing a new command code into register Command e.g.: the Idle-Command.

8.10.2 Command set overview

Table 43. Command set

Command	No.	Parameter (bytes)	Short description
Idle	00h	-	no action, cancels current command execution
LPCD	01h	-	low-power card detection
LoadKey	02h	(keybyte1),(keybyte2), (keybyte3), (keybyte4), (keybyte5),(keybyte6);	reads a MIFARE key (size of 6 bytes) from FIFO buffer ant puts it into Key buffer
MFAuthent	03h	60h or 61h, (block address), (card serial number byte0),(card serial number byte1), (card serial number byte2),(card serial number byte3);	performs the MIFARE standard authentication in MIFARE read/write mode only
AckReq	04h	-	performs a query, an Ack and a Req-Rn for ISO/IEC 18000-3 mode 3/ EPC Class-1 HF
Receive	05h	-	activates the receive circuit
Transmit	06h	-	transmits data from the FIFO buffer
Transceive	07h	-	transmits data from the FIFO buffer and automatically activates the receiver after transmission finished
WriteE2	08h	addressL, addressH, data;	gets one byte from FIFO buffer and writes it to the internal EEPROM, valid address range are the addresses of the MIFARE Key area
WriteE2Page	09h	(page Address), data0, [data1 ..data63];	gets up to 64 bytes (one EEPROM page) from the FIFO buffer and writes it to the EEPROM, valid page address range are the pages of the MIFARE Key Area
ReadE2	0Ah	addressL, address H, length;	reads data from the EEPROM and copies it into the FIFO buffer, valid address range are the addresses of the MIFARE Key area

All information provided in this document is subject to legal disclaimers.

© NXP B.V. 2012. All rights reserved.

Table 43. Command set *…continued*

Command	No.	Parameter (bytes)	Short description
LoadReg	0Ch	(EEPROM ddressL), (EEPROM addressH), RegAdr, (number of Register to be copied);	reads data from the internal EEPROM and initializes the CLRC663 registers. EEPROM address needs to be within EEPROM sector 2
LoadProtocol	0Dh	(Protocol umber RX), (Protocol number TX);	reads data from the internal EEPROM and initializes the CLRC663 registers needed for a Protocol change
LoadKeyE2	0Eh	KeyNr;	copies a key of the EEPROM into the key buffer
StoreKeyE2	0Fh	KeyNr, byte1,byte2, byte3, byte4, byte5,byte6;	stores a MIFARE key (size of 6 bytes) into the EEPROM
ReadRNR	1Ch	-	Copies bytes from the Random Number generator into the FIFO until the FiFo is full
Soft Reset	1Fh	-	resets the CLRC663

8.10.3 Command functionality

8.10.3.1 Idle command

Command (00h);

This command indicates that the CLRC663 is in idle mode. This command is also used to terminate the actual command.

8.10.3.2 LPCD command

Command (01h);

This command performs a low-power card detection and or an automatic trimming of the LPO. The values of the sampled I and Q channel are stored in the register map. The value is compared with the min/max values in the register. If it exceeds the limits, an LPCD_Irq will be raised. After the command the standby is activated if selected.

8.10.3.3 Load key command

Command (02h), Parameter1 (key byte1),..., Parameter6 (key byte6);

Loads a MIFARE Key (6 bytes) for Authentication from the FIFO into the crypto unit.

Abort condition: Less than 6 bytes written to the FIFO.

8.10.3.4 MFAuthent command

Command (03h), Parameter1 (Authentication command code 60h or 61h), Parameter2 (block address), Parameter3 (card serial number byte0), Parameter4 (card serial number byte1), Parameter5 (card serial number byte2), Parameter6 (card serial number byte3);

This command handles the MIFARE authentication in Reader/Writer mode to enable a secure communication to any MIFARE classic card.

When the MFAuthent command is active, any FIFO access is blocked. Anyhow if there is an access to the FIFO, the bit WrErr in the Error register is set.

This command terminates automatically when the MIFARE card is authenticated and the bit MFCrypto1On is set to logic 1.

All information provided in this document is subject to legal disclaimers.

© NXP B.V. 2012. All rights reserved.

This command does not terminate automatically, when the card does not answer, therefore the timer should be initialized to automatic mode. In this case, beside the bit IdleIRq the bit TimerIRq can be used as termination criteria. During authentication processing the bits RxIRq and TxIRq are blocked. The Crypto1On shows if the authentication was successful.

The following data shall be written to the FIFO before the command can be activated:

- Authentication command code (60h, 61h)
- Block address
- Card serial number byte 0
- Card serial number byte 1
- Card serial number byte 2
- Card serial number byte 3

In total, 6 bytes are written to the FIFO.

Remark: When the MFAuthent command is active, any FIFO access is blocked. If there is an attempt to access to the FIFO during MFAuthent being active, the bit WrErr in the Error register is set.

This MFAuthent command terminates automatically when the MIFARE card is authenticated and the bit MFCrypto1On in the Status register is set to logic 1.

This MFAuthent command does not terminate automatically when the card does not answer, therefore the timer should be initialized to automatic mode. In this case, beside the bit IdleIrq, the bit TimerIrq can be used as termination criteria. During authentication processing the bit RxIrq and bit TxIrq are blocked. The Crypto1On bit is only valid after termination of the authentication command (either after processing the protocol or after writing IDLE to the command register).

In case there is an error during authentication, the bit ProtocolErr in the Error register is set to logic 1 and the bit Crypto1On in register Status2Reg is set to logic 0.

8.10.3.5 AckReq command

Command (04h);

Performs a Query (Full command must be written into the FIFO); a Ack and a ReqRn command. All answers to the command will be written into the FIFO. The error flag is copied after the answer into the FIFO.

This command terminates automatically when finished and the active command is idle.

8.10.3.6 Receive command

Command (05h);

The CLRC663 activates the receiver path and waits for any data stream to be received. The correct settings have to be chosen before starting this command.

This command terminates automatically when the received data stream ends. This is indicated either by the end of frame pattern or by the length byte depending on the selected framing and speed.

All information provided in this document is subject to legal disclaimers.

© NXP B.V. 2012. All rights reserved.

Remark: If the bit RxMultiple in the RxModeReg register is set to logic 1, the Receive command does not terminate automatically. It has to be terminated by activating any other command in the CommandReg register (see Section 9.17.6 “RxMod”).

8.10.3.7 Transmit command

Command (06h);

The content of the FIFO is transmitted immediately after starting the command. Before transmitting the FIFO content all relevant register have to be set to transmit data.

This command terminates automatically when the FIFO gets empty. It can be terminated by any other command written to the command register.

8.10.3.8 Transceive command

Command (07h);

This command transmits data from the FIFO and receives data from the RF field once. The first action is transmitting and after a transmission the command is changed to receive a data stream.

Each transmission process starts by writing the command into CommandReg.

Remark: If the bit RxMultiple in register RxModeReg is set to logic 1, this command will never leave the receiving state, because the receiving will not be cancelled automatically.

8.10.3.9 WriteE2 command

Command (08h), Parameter1 (addressL), Parameter2 (addressH), Parameter3 (data);

This command writes one byte into the EEPROM. If the FIFO contains no data, the command will wait until the data is available

Abort condition: insufficient parameter in FIFO; Address-parameter outside of range

8.10.3.10 WriteE2PAGE command

Command (09h), Parameter1 (page address), Parameter2 (data0), Parameter3...65 [data1 ..data63];

This command writes up to 64 bytes into the EEPROM.

Abort condition: Insufficient parameters in FIFO; Page address parameter outside of range.

8.10.3.11 ReadE2 command

Command (0Ah), Parameter1 (addressL), Parameter2 (addressH), Parameter3 (length);

Reads up to 256 bytes from the EEPROM to the FIFO. If a read operation exceeds the address 1FFFh, the read operation continues from address 0000h.

Abort condition: Insufficient parameter in FIFO; Address parameter outside of range.

8.10.3.12 LoadReg command

Command (0Ch), Parameter1 (EEPROM addressL),Parameter2 (EEPROM addressH), Parameter3 (RegAdr), Parameter4 (number);

All information provided in this document is subject to legal disclaimers.

© NXP B.V. 2012. All rights reserved.

Read a defined number of bytes from the EEPROM and copies the value into the Register set, beginning at the given address RegAdr.

Abort condition: Insufficient parameter in FIFO; Address parameter outside of range.

8.10.3.13 LoadProtocol command

Command (0Dh), Parameter1, (Protocol number RX), Parameter2 (Protocol number TX);

Reads out the EEPROM and copies the values to the RX-Protected area and to the TX-protected area. These are all important registers to a Protocol selection.

Abort condition: Insufficient parameter in FIFO

Table 44. Predefined protocol overview[1]

Protocol Number (decimal)	Protocol	Transmitter speed [kbits/s]	Modulation	Receiver speed [kbits/s]	Modulation
00	ISO/IEC14443 A	106	Miller	106	Manchester SubC
01	ISO/IEC14443 A	212	Miller	212	BPSK
02	ISO/IEC14443 A	424	Miller	424	BPSK
03	ISO/IEC14443 A	848	Miller	848	BPSK
04	ISO/IEC14443 B	106	NRZ	106	BPSK
05	ISO/IEC14443 B	212	NRZ	212	BPSK
06	ISO/IEC14443 B	424	NRZ	424	BPSK
07	ISO/IEC14443 B	848	NRZ	848	BPSK
08	FeliCa	212	Manchester	212	Manchester
09	FeliCa	424	Manchester	424	Manchester
10	ISO/IEC15693		1/4	26	SSC
11	ISO/IEC15693		1/4	26	DSC
12	ISO/IEC15693		1/256	52	SSC
13	EPC/UID		Unitray	26	SSC
14	ISO/IEC 18000-3 mode 3/ EPC Class-1 HF		Tari, ASK, PIE		2/424
15	ISO/IEC 18000-3 mode 3/ EPC Class-1 HF		Tari, ASK, PIE		4/424
16	ISO/IEC 18000-3 mode 3/ EPC Class-1 HF		Tari, ASK, PIE		2/848
17	ISO/IEC 18000-3 mode 3/ EPC Class-1 HF		Tari, ASK, PIE		4/848
18			RFU		

[1] For more protocol details please refer to Section 8 “Functional description”.

8.10.3.14 LoadKeyE2 command

Command (0Eh), Parameter1 (key number);

Loads a MIFARE key for authentication from the EEPROM into the crypto 1 unit.

Abort condition: Insufficient parameter in FIFO; KeyNr is outside the MKA.

All information provided in this document is subject to legal disclaimers.

© NXP B.V. 2012. All rights reserved.

8.10.3.15 StoreKeyE2 command

Command (0Fh), Parameter1 (KeyNr), Parameter2(keybyte1), Parameter3(keybyte2), Parameter4(keybyte3), Parameter5(keybyte4), Parameter6(keybyte5), Parameter7 (keybyte6);

Stores MIFARE Keys into the EEPROM. The key number parameter indicates the first key (n) in the MKA that will be written. If more than one MIFARE Key is available in the FIFO then the next key (n+1) will be written as well and so forth until the FIFO is empty. If an incomplete key (less than 6 bytes) is written into the FIFO, this key will be ignored and will remain in the FIFO.

Abort condition: Insufficient parameter in FIFO; KeyNr is outside the MKA;

8.10.3.16 GetRNR command

Command (1Ch);

This command is reading Random Numbers from the random number generator of the CLRC663. The Random Numbers are copied to the FIFO until the FIFO is full.

8.10.3.17 SoftReset command

Command (1Fh);

This command is performing a soft reset. Triggered by this command all the default values for the register setting will be read from the EEPROM and copied into the register set.

All information provided in this document is subject to legal disclaimers.

© NXP B.V. 2012. All rights reserved.

9. CLRC663 registers

9.1 Register bit behavior

Depending on the functionality of a register, the access conditions to the register can vary. In principle, bits with same behavior are grouped in common registers. The access conditions are described in Table 45.

Table 45. Behavior of register bits and their designation

Abbreviation	Behavior	Description
r/w	read and write	These bits can be written and read via the host interface. Since they are used only for control purposes, the content is not influenced by the state machines but can be read by internal state machines.
dy	dynamic	These bits can be written and read via the host interface. They can also be written automatically by internal state machines, for example Command register changes its value automatically after the execution of the command.
r	read only	These register bits indicates hold values which are determined by internal states only.
w	write only	Reading these register bits always returns zero.
RFU	-	These bits are reserved for future use and must not be changed. In case of a required write access, it is recommended to write a logic 0.

Table 46. CLRC663 registers overview

Address	Register name	Function
00h	Command	Starts and stops command execution
01h	HostCtrl	Host control register
02h	FIFOControl	Control register of the FIFO
03h	WaterLevel	Level of the FIFO underflow and overflow warning
04h	FIFOLength	Length of the FIFO
05h	FIFOData	Data In/Out exchange register of FIFO buffer
06h	IRQ0	Interrupt register 0
07h	IRQ1	Interrupt register 1
08h	IRQ0En	Interrupt enable register 0
09h	IRQ1En	Interrupt enable register 1
0Ah	Error	Error bits showing the error status of the last command execution
0Bh	Status	Contains status of the communication
0Ch	RxBitCtrl	Control register for anticollision adjustments for bit oriented protocols
0Dh	RxColl	Collision position register
0Eh	TControl	Control of Timer 0..3
0Fh	T0Control	Control of Timer0
10h	T0ReloadHi	High register of the reload value of Timer0
11h	T0ReloadLo	Low register of the reload value of Timer0
12h	T0CounterValHi	Counter value high register of Timer0
13h	T0CounterValLo	Counter value low register of Timer0

All information provided in this document is subject to legal disclaimers.

© NXP B.V. 2012. All rights reserved.

Table 46. CLRC663 registers overview *...continued*

Address	Register name	Function
14h	T1Control	Control of Timer1
15h	T1ReloadHi	High register of the reload value of Timer1
16h	T1ReloadLo	Low register of the reload value of Timer1
17h	T1CounterValHi	Counter value high register of Timer1
18h	T1CounterValLo	Counter value low register of Timer1
19h	T2Control	Control of Timer2
1Ah	T2ReloadHi	High byte of the reload value of Timer2
1Bh	T2ReloadLo	Low byte of the reload value of Timer2
1Ch	T2CounterValHi	Counter value high byte of Timer2
1Dh	T2CounterValLo	Counter value low byte of Timer2
1Eh	T3Control	Control of Timer3
1Fh	T3ReloadHi	High byte of the reload value of Timer3
20h	T3ReloadLo	Low byte of the reload value of Timer3
21h	T3CounterValHi	Counter value high byte of Timer3
22h	T3CounterValLo	Counter value low byte of Timer3
23h	T4Control	Control of Timer4
24h	T4ReloadHi	High byte of the reload value of Timer4
25h	T4ReloadLo	Low byte of the reload value of Timer4
26h	T4CounterValHi	Counter value high byte of Timer4
27h	T4CounterValLo	Counter value low byte of Timer4
28h	DrvMod	Driver mode register
29h	TxAmp	Transmitter amplifier register
2Ah	DrvCon	Driver configuration register
2Bh	Txl	Transmitter register
2Ch	TxCrcPreset	Transmitter CRC control register, preset value
2Dh	RxCrcPreset	Receiver CRC control register, preset value
2Eh	TxDataNum	Transmitter data number register
2Fh	TxModWidth	Transmitter modulation width register
30h	TxSym10BurstLen	Transmitter symbol 1 + symbol 0 burst length register
31h	TXWaitCtrl	Transmitter wait control
32h	TxWaitLo	Transmitter wait low
33h	FrameCon	Transmitter frame control
34h	RxSofD	Receiver start of frame detection
35h	RxCtrl	Receiver control register
36h	RxWait	Receiver wait register
37h	RxThreshold	Receiver threshold register
38h	Rcv	Receiver register
39h	RxAna	Receiver analog register
3Ah	RFU	-
3Bh	SerialSpeed	Serial speed register
3Ch	LPO_Trimm	Low-power oscillator trimming register

All information provided in this document is subject to legal disclaimers.

© NXP B.V. 2012. All rights reserved.

Table 46. CLRC663 registers overview *...continued*

Address	Register name	Function
3Dh	PLL_Ctrl	IntegerN PLL control register, for microcontroller clock output adjustment
3Eh	PLL_DivOut	IntegerN PLL control register, for microcontroller clock output adjustment
3Fh	LPCD_QMin	Low-power card detection Q channel minimum threshold
40h	LPCD_QMax	Low-power card detection Q channel maximum threshold
41h	LPCD_IMin	Low-power card detection I channel minimum threshold
42h	LPCD_I_Result	Low-power card detection I channel result register
43h	LPCD_Q_Result	Low-power card detection Q channel result register
44h	PadEn	PIN enable register
45h	PadOut	PIN out register
46h	PadIn	PIN in register
47h	SigOut	Enables and controls the SIGOUT Pin
48h	TxBitMod	Transmitter bit modus register
49h	RFU	-
4Ah	TxDataCon	Transmitter data configuration register
4Bh	TxDataMod	Transmitter data modulation register
4Ch	TxSymFreq	Transmitter symbol frequency
4Dh	TxSym0H	Transmitter symbol 0 high register
4Eh	TxSym0L	Transmitter symbol 0 low register
4Fh	TxSym1H	Transmitter symbol 1 high register
50h	TxSym1L	Transmitter symbol 1 low register
51h	TxSym2	Transmitter symbol 2 register
52h	TxSym3	Transmitter symbol 3 register
53h	TxSym10Len	Transmitter symbol 1 + symbol 0 length register
54h	TxSym32Len	Transmitter symbol 3 + symbol 2 length register
55h	TxSym10BurstCtrl	Transmitter symbol 1 + symbol 0 burst control register
56h	TxSym10Mod	Transmitter symbol 1 + symbol 0 modulation register
57h	TxSym32Mod	Transmitter symbol 3 + symbol 2 modulation register
58h	RxBitMod	Receiver bit modulation register
59h	RxEofSym	Receiver end of frame symbol register
5Ah	RxSyncValH	Receiver synchronisation value high register
5Bh	RxSyncValL	Receiver synchronisation value low register
5Ch	RxSyncMod	Receiver synchronisation mode register
5Dh	RxMod	Receiver modulation register
5Eh	RxCorr	Receiver correlation register
5Fh	FabCal	Calibration register of the receiver, calibration performed at production
7Fh	Version	Version and subversion register

All information provided in this document is subject to legal disclaimers.

© NXP B.V. 2012. All rights reserved.

9.2 Command configuration

9.2.1 Command

Starts and stops command execution.

Table 47. Command register (address 00h)

Bit	7	6	5	4	3	2	1	0
Symbol	Standby	Modem Off	RFU	Command				
Access rights	dy	r/w	-	dy				

Table 48. Command bits

Bit	Symbol	Description
7	Standby	Set to 1, the IC is entering power-down mode.
6	ModemOff	Set to logic 1, the receiver and the transmitter circuit is powering down.
5	RFU	-
4 to 0	Command	Defines the actual command for the CLRC663.

9.3 SAM configuration register

9.3.1 HostCtrl

Via the HostCtrl Register the interface access right can be controlled

Table 49. HostCtrl register (address 01h);

Bit	7	6	5	4	3	2	1	0
Symbol	RegEn	BusHost	BusSAM	RFU	SAMInterface	SAMInterface	RFU	RFU
Access rights	dy	r/w	r/w	-	r/w	r/w	-	-

Table 50. HostCtrl bits

Bit	Symbol	Description
7	RegEn	If this bit is set to logic 1, the register can be changed at the next register access. The next write access clears this bit automatically.
6	BusHost	Set to logic 1, the bus control enables the host interface. This bit cannot be set together with BusSAM. This bit can only be set if the bit RegEn was previously set.
5	BusSAM	Set to logic 1, the bus control enables the SAM interface. This bit cannot be set together with BusHost. This bit can only be set if the bit RegEn is previously set.
4	RFU	-
3 to 2	SAMInterface	0h:Interface switched off 1h:Interface SPI active 2h:Interface I^2CL active 3h:Interface I^2C
1 to 0	RFU	-

All information provided in this document is subject to legal disclaimers.

© NXP B.V. 2012. All rights reserved.

9.4 FIFO configuration register

9.4.1 FIFOControl

FIFOControl defines the characteristics of the FIFO

Table 51. FIFOControl register (address 02h);

Bit	7	6	5	4	3	2	1	0
Symbol	FIFOSize	HiAlert	LoAlert	FIFOFlush	RFU	WaterLevel	FIFOLength	
Access rights	r/w	r	r	w	-	r/w	r	

Table 52. FIFOControl bits

Bit	Symbol	Description
7	FIFOSize	Set to logic 1, FIFO size is 255 bytes; Set to logic 0, FIFO size is 512 bytes. It is recommended to change the FIFO size only, when the FIFO content had been cleared.
6	HiAlert	Set to logic 1, when the number of bytes stored in the FIFO buffer fulfils the following equation: HiAlert = (FIFOSize - FIFOLength) <= WaterLevel
5	LoAlert	Set to logic 1, when the number of bytes stored in the FIFO buffer fulfils the following conditions: LoAlert =1 if FIFOLength <= WaterLevel
4	FIFOFlush	Set to logic 1 empties the FIFO buffer. Reading this bit will always return 0
3	RFU	-
2	WaterLevel	Defines the bit 8 (MSB) for the waterlevel (extension of WaterLevel). This bit is only evaluated in the 512-bit FIFO mode. Bits 7..0 are defined in WaterLevel.
1 to 0	FIFOLength	Defines the bit9 (MSB) and bit8 for the FIFO length (extension of FIFOLength). These two bits are only evaluated in the 512-bit FIFO mode, The bits 7..0 are defined in FIFOLength.

9.4.2 WaterLevel

Defines the level for FIFO under- and overflow warning levels.This register is extended by 1 bit in FIFOControl in case the 512-bit FIFO mode is activated by setting bit FIFOControl.FIFOSize.

Table 53. WaterLevel register (address 03h);

Bit	7	6	5	4	3	2	1	0
Symbol	WaterLevel							
Access rights	r/w							

All information provided in this document is subject to legal disclaimers.

© NXP B.V. 2012. All rights reserved.

Table 54. WaterLevel bits

Bit	Symbol	Description
7 to 0	WaterLevel	Sets a level to indicate a FIFO-buffer state which can be read from bits HighAlert and LowAlert in the FifoControl. In 512-bit FIFO mode, the register is extended by bit WaterLevel in the FIFOControl. This functionality can be used to avoid a FIFO buffer overflow or underflow: The bit HiAlert bit in FIFO Control is read logic 1, if the number of bytes in the FIFO-buffer is equal or less than the number defined by WaterLevel. The bit LoAlert bit in FIFO control is read logic 1, if the number of bytes in the FIFO buffer is equal or less than the number defined by WaterLevel. Note: For the calculation of HiAlert and LoAlert see register description of these bits (Section 9.4.1 “FIFOControl”).

All information provided in this document is subject to legal disclaimers.

© NXP B.V. 2012. All rights reserved.

9.4.3 FIFOLength

Number of bytes in the FIFO buffer. In 512-bit modem this register is extended by FIFOControl.FifoLength.

Table 55. FIFOLength register (address 04h); reset value: 00h

Bit	7	6	5	4	3	2	1	0
Symbol	FIFOLength							
Access rights	dy							

Table 56. FIFOLength bits

Bit	Symbol	Description
7 to 0	FIFOLength	Indicates the number of bytes in the FIFO buffer. In 512-bit modem this register is extended by the bits FIFOLength in the FIFOControl register. Writing to the FIFOData register increments, reading decrements the number of bytes in the FIFO.

9.4.4 FIFOData

In- and output of FIFO buffer. Contrary to any read/write access to other addresses, reading or writing to the FIFO address does not increment the address pointer. Resulting in an efficient data transfer from and to the FIFO buffer. Writing to the FIFOData register increments, reading decrements the number of bytes present in the FIFO.

Table 57. FIFOData register (address 05h);

Bit	7	6	5	4	3	2	1	0
Symbol	FIFOData							
Access rights	dy							

Table 58. FIFOData bits

Bit	Symbol	Description
7 to 0	FIFOData	Data input and output port for the internal FIFO buffer. Refer to Section 8.5 “Buffer”.

9.5 Interrupt configuration registers

The Registers IRQ0 register and IRQ1 register implement a special functionality to avoid the not intended modification of bits.

The mechanism of changing register contents requires the following consideration: IRQ(x). Set indicates, if a set bit on position 0 to 6 shall be cleared or set. Depending on the content of IRQ(x).Set, a write of a logical 1 to positions 0 to 6 either clears or sets the corresponding bit. With this register the application can modify the interrupt status which is maintained by the CLRC663

Bit 7 indicates, if the intended modification is a setting or clearance of a bit. Any 1 written to a bit position 6...0 will trigger the setting or clearance of this bit as defined by bit 7. Example: writing FFh sets all bits 6..0, writing 7Fh clears all bits 6..0 of the interrupt request register

All information provided in this document is subject to legal disclaimers.

© NXP B.V. 2012. All rights reserved.

9.5.1 IRQ0 register

Interrupt request register 0.

Table 59. IRQ0 register (address 06h); reset value: 00h

Bit	7	6	5	4	3	2	1	0
Symbol	Set	Hi AlertIrq	Lo AlertIrq	IdleIrq	TxIrq	RxIrq	ErrIrq	RxSOF Irq
Access rights	w	dy	dy	dy	dy	dy	dy	dy

Table 60. IRQ0 bits

Bit	Symbol	Description
7	Set	1: writing a 1 to a bit position 6..0 sets the interrupt request 0: Writing a 1 to a bit position 6..0 clears the interrupt request
6	HiAlerIrq	Set, when bit HiAlert in register Status1Reg is set. In opposition to HiAlert, HiAlertIrq stores this event and can only be reset if Set is cleared.
5	LoAlertIrq	Set, when bit LoAlert in register Status1 is set. In opposition to LoAlert, LoAlertIrq stores this event and can only be reset if Set is cleared
4	IdleIrq	Set, when a command terminates by itself e.g. when the Command changes its value from any command to the Idle command. If an unknown command is started, the Command changes its content to the idle state and the bit IdleIRq is set. Starting the Idle command by the Controller does not set bit IdleIRq.
3	TxIrq	Set, when data transmission is completed, which is immediately after the last bit is sent.
2	RxIrq	Set, when the receiver detects the end of a data stream. Note: This flag is no indication that the received data stream is correct. The error flags have to be evaluated to get the status of the reception.
1	ErrIrq	Set, when the one of the following errors is set: FifoWrErr, FiFoOvl, ProtErr, NoDataErr, IntegErr
0	RxSOFIrq	Set, when a SOF or a subcarrier is detected

9.5.2 IRQ1 register

Interrupt request register 1.

Table 61. IRQ1 register (address 07h)

Bit	7	6	5	4	3	2	1	0
Symbol	Set	GlobalIrq	LPCD_Irq	Timer4Irq	Timer3Irq	Timer2Irq	Timer1Irq	Timer0Irq
Access rights	w	dy	dy	dy	dy	dy	dy	dy

All information provided in this document is subject to legal disclaimers.

© NXP B.V. 2012. All rights reserved.

Table 62. IRQ1 bits

Bit	Symbol	Description
7	Set	1: writing a 1 to a bit position 5..0 sets the interrupt request 0: Writing a 1 to a bit position 5..0 clears the interrupt request
6	GlobalIrq	Set, if an enabled Irq occurs.
5	LPCD_Irq	Set if a card is detected in Low-power card detection sequence.
4	Timer4Irq	Set to logic 1 when Timer4 has an underflow.
3	Timer3Irq	Set to logic 1 when Timer3 has an underflow.
2	Timer2Irq	Set to logic 1 when Timer2 has an underflow.
1	Timer1Irq	Set to logic 1 when Timer1 has an underflow.
0	Timer0Irq	Set to logic 1 when Timer0 has an underflow.

9.5.3 IRQ0En register

Interrupt request enable register for IRQ0. This register allows to define if an interrupt request is processed by the CLRC663.

Table 63. IRQ0En register (address 08h)

Bit	7	6	5	4	3	2	1	0
Symbol	Irq_Inv	Hi AlertIrqEn	LoAlertIrqEn	IdleIrqEn	TxIrqEn	RxIrqEn	ErrIrqEn	RxSOFIrqEn
Access rights	r/w	r/w	r/w	r/w	r/w	r/w	r/w	r/w

Table 64. IRQ0En bits

Bit	Symbol	Description
7	Irq_Inv	Set to one the signal of the IRQ pin is inverted
6	Hi AlerIrqEn	Set to logic 1, it allows the High Alert interrupt Request (indicated by the bit HiAlertIrq) to be propagated to the GlobalIrq
5	Lo AlertIrqEn	Set to logic 1, it allows the Low Altert Interrupt Request (indicated by the bit LoAlertIrq) to be propagated to the GlobalIrq
4	IdleIrqEn	Set to logic 1, it allows the Idle interrupt request (indicated by the bit IdleIrq) to be propagated to the GlobalIrq
3	TxIRqEn	Set to logic 1, it allows the transmitter interrupt request (indicated by the bit TxtIrq) to be propagated to the GlobalIrq
2	RxIRqEn	Set to logic 1, it allows the receiver interrupt request (indicated by the bit RxIrq) to be propagated to the GlobalIrq
1	ErrIRqEn	Set to logic 1, it allows the Error interrupt request (indicated by the bit ErrorIrq) to be propagated to the GlobalIrq
0	RxSOFIrqEn	Set to logic 1, it allows the RxSOF interrupt request (indicated by the bit RxSOFIrq) to be propagated to the GlobalIrq

9.5.4 IRQ1En

Interrupt request enable register for IRQ1.

All information provided in this document is subject to legal disclaimers.

© NXP B.V. 2012. All rights reserved.

Table 65. IRQ1EN register (address 09h);

Bit	7	6	5	4	3	2	1	0
Symbol	IrqPushPull	IrqPinEn	LPCD_IrqEn	Timer4IrqEn	Timer3IrqEn	Timer2IrqEn	Timer1IrqEn	Timer0IrqEn
Access rights	r/w	r/w	r/w	r/w	r/w	r/w	r/w	r/w

Table 66. IRQ1EN bits

Bit	Symbol	Description
7	IrqPushPull	Set to 1 the IRQ-pin acts as PushPull pin, otherwise it acts as OpenDrain pin
6	IrqPinEN	Set to logic 1, it allows the global interrupt request (indicated by the bit GlobalIrq) to be propagated to the interrupt pin
5	LPCD_IrqEN	Set to logic 1, it allows the LPCDinterrupt request (indicated by the bit LPCDIrq) to be propagated to the GlobalIrq
4	Timer4IRqEn	Set to logic 1, it allows the Timer4 interrupt request (indicated by the bit Timer4Irq) to be propagated to the GlobalIrq
3	Timer3IrqEn	Set to logic 1, it allows the Timer3 interrupt request (indicated by the bit Timer3tIrq) to be propagated to the GlobalIrq
2	Timer2IrqEn	Set to logic 1, it allows the Timer2 interrupt request (indicated by the bit Timer2Irq) to be propagated to the GlobalIrq
1	Timer1IrqEn	Set to logic 1, it allows the Timer1 interrupt request (indicated by the bit Timer1Irq) to be propagated to the GlobalIrq
0	Timer0IrqEn	Set to logic 1, it allows the Timer0 interrupt request (indicated by the bit Timer0Irq) to be propagated to the GlobalIrq

9.6 Contactless interface configuration registers

9.6.1 Error

Error register.

Table 67. Error register (address 0Ah)

Bit	7	6	5	4	3	2	1	0
Symbol	EE_Err	FiFoWrErr	FIFOOvl	MinFrameErr	NoDataErr	CollDet	ProtErr	IntegErr
Access rights	dy	dy	dy	dy	dy	dy	dy	dy

All information provided in this document is subject to legal disclaimers.

© NXP B.V. 2012. All rights reserved.

Table 68. Error bits

Bit	Symbol	Description
7	EE_Err	An error appeared during the last EEPROM command. For details see the descriptions of the EEPROM commands
6	FIFOWrErr	Data was written into the FIFO, during a transmission of a possible CRC, during "RxWait", "Wait for data" or "Receiving" state, or during an authentication command. The Flag is cleared when a new CL command is started. If RxMultiple is active, the flag is cleared after the error flags have been written to the FIFO.
5	FIFOOvl	Data is written into the FIFO when it is already full. The data that is already in the FIFO will remain untouched. All data that is written to the FIFO after this Flag is set to 1 will be ignored.
4	Min FrameErr	A valid SOF was received, but afterwards less then 4 bits of data were received. Note: Frames with less than 4 bits of data are automatically discarded and the RxDecoder stays enabled. Furthermore no RxIrq is set. The same is valid for less than 3 Bytes if the EMD suppression is activated Note: MinFrameErr is automatically cleared at the start of a receive or transceive command. In case of a transceive command, it is cleared at the start of the receiving phase ("Wait for data" state)
3	NoDataErr	Data should be sent, but no data is in FIFO
2	CollDet	A collision has occurred. The position of the first collision is shown in the register RxColl. Note: CollDet is automatically cleared at the start of a receive or transceive command. In case of a transceive command, it is cleared at the start of the receiving phase (“Wait for data” state). Note: If a collision is part of the defined EOF symbol, CollDet is not set to 1.
1	ProtErr	A protocol error has occurred. A protocol error can be a wrong stop bit, a missing or wrong ISO/IEC14443B EOF or SOF or a wrong number of received data bytes. When a protocol error is detected, data reception is stopped. Note: ProtErr is automatically cleared at start of a receive or transceive command. In case of a transceive command, it is cleared at the start of the receiving phase (“Wait for data” state). Note: When a protocol error occurs the last received data byte is not written into the FIFO.
0	IntegErr	A data integrity error has been detected. Possible cause can be a wrong parity or a wrong CRC. In case of a data integrity error the reception is continued. Note: IntegErr is automatically cleared at start of a Receive or Transceive command. In case of a Transceive command, it is cleared at the start of the receiving phase (“Wait for data” state). Note: If the NoColl bit is set, also a collision is setting the IntegErr.

9.6.2 Status

Status register.

All information provided in this document is subject to legal disclaimers.

© NXP B.V. 2012. All rights reserved.

Table 69. Status register (address 0Bh)

Bit	7	6	5	4	3	2	1	0
Symbol	-	-	Crypto1On	-	-	ComState		
Access rights	RFU	RFU	dy	RFU	RFU	r		

Table 70. Status bits

Bit	Symbol	Description
7 to 6	-	RFU
5	Crypto1On	Indicates if the MIFARE Crypto is on. Clearing this bit is switching the MIFARE Crypto off. The bit can only be set by the MFAuthent command.
4 to 3	-	RFU
2 to 0	ComState	ComState shows the status of the transmitter and receiver state machine:
		000b ... Idle
		001b ... TxWait
		011b ... Transmitting
		101b ... RxWait
		110b ... Wait for data
		111b ... Receiving
		100b ... not used

9.6.3 RxBitCtrl

Receiver control register.

Table 71. RxBitCtrl register (address 0Ch);

Bit	7	6	5	4	3	2	1	0
Symbol	ValuesAfterColl	RxAlign			NoColl	RxLastBits		
Access rights	r/w	r/w			r/w	w		

Table 72. RxBitCtrl bits

Bit	Symbol	Description
7	ValuesAfter Coll	If cleared, every received bit after a collision is replaced by a zero. This function is needed for ISO/IEC14443 anticollision

All information provided in this document is subject to legal disclaimers.

© NXP B.V. 2012. All rights reserved.

Table 72. RxBitCtrl bits

Bit	Symbol	Description
6 to 4	RxAlign	Used for reception of bit oriented frames: RxAlign defines the bit position length for the first bit received to be stored. Further received bits are stored at the following bit positions. Example: RxAlign = 0h - the LSB of the received bit is stored at bit 0, the second received bit is stored at bit position 1. RxAlign = 1h - the LSB of the received bit is stored at bit 1, the second received bit is stored at bit position 2. RxAlign = 7h - the LSB of the received bit is stored at bit 7, the second received bit is stored in the following byte at position 0. Note: If RxAlign = 0, data is received byte-oriented, otherwise bit-oriented.
3	NoColl	If this bit is set, a collision will result in an IntegErr
2 to 0	RxLastBits	Defines the number of valid bits of the last data byte received in bit-oriented communications. If zero the whole byte is valid. Note: These bits are set by the RxDecoder in a bit-oriented communication at the end of the communication. They are reset at start of reception.

All information provided in this document is subject to legal disclaimers.

© NXP B.V. 2012. All rights reserved.

9.6.4 RxColl

Receiver collision register.

Table 73. RxColl register (address 0Dh);

Bit	7	6	5	4	3	2	1	0
Symbol	CollPosValid	CollPos						
Access rights	r	r						

Table 74. RxColl bits

Bit	Symbol	Description
7	CollPos Valid	If set to 1, the value of CollPos is valid. Otherwise no collision is detected or the position of the collision is out of the range of bits CollPos.
6 to 0	CollPos	These bits show the bit position of the first detected collision in a received frame (only data bits are interpreted). CollPos can only be displayed for the first 8 bytes of a data stream. Example: 00h indicates a bit collision in the 1st bit 01h indicates a bit collision in the 2nd bit 08h indicates a bit collision in the 9th bit (1st bit of 2nd byte) 3Fh indicates a bit collision in the 64th bit (8th bit of the 8th byte) These bits shall only be interpreted in Passive communication mode at 106 kbit/s or ISO/IEC 14443A/MIFARE reader /writer mode or ISO/IEC 15693/ICODE SLI read/write mode if bit CollPosValid is set. Note: If RxBitCtrl.RxAlign is set to a value different to 0, this value is included in the CollPos. Example: RxAlign = 4h, a collision occurs in the 4th received bit (which is the last bit of that UID byte). The CollPos = 7h in this case.

All information provided in this document is subject to legal disclaimers.

© NXP B.V. 2012. All rights reserved.

9.7 Timer configuration registers

9.7.1 TControl

Control register of the timer section.

The TControl implements a special functionality to avoid the not intended modification of bits.

Bit 3..0 indicates, which bits in the positions 7..4 are intended to be modified.

Example: writing FFh sets all bits 7..4, writing F0h does not change any of the bits 7..4

Table 75. TControl register (address 0Eh)

Bit	7	6	5	4	3	2	1	0
Symbol	T3Running	T2Running	T1Running	T0Running	T3Start StopNow	T2Start StopNow	T1Start StopNow	T0Start StopNow
Access rights	dy	dy	dy	dy	w	w	w	w

Table 76. TControl bits

Bit	Symbol	Description
7	T3Running	Indicates Timer3 is running.If the bit T3startStopNow is set, this bit and the timer can be started/stopped
6	T2Running	Indicates Timer2 is running. If the bit T2startStopNow is set, this bit and the timer can be started/stopped
5	T1Running	Indicates tTmer1 is running. If the bit T1startStopNow is set, this bit and the timer can be started/stopped
4	T0Running	Indicates Timer0 is running. If the bit T0startStopNow is set, this bit and the timer can be started/stopped
3	T3StartStop Now	The bit 7 of TControl T3Running can be modified if set
2	T2StartStop Now	The bit 6of TControl T2Running can be modified if set
1	T1StartStop Now	The bit 5of TControl T1Running can be modified if set
0	T0StartStop Now	The bit 4 of TControl T0Running can be modified if set

9.7.2 T0Control

Control register of the Timer0.

Table 77. T0Control register (address 0Fh);

Bit	7	6	5	4	3	2	1	0
Symbol	T0StopRx	-	T0Start		T0AutoRestarted	-	T0Clk	
Access rights	r/w	RFU	r/w		r/w	RFU	r/w	

All information provided in this document is subject to legal disclaimers.

© NXP B.V. 2012. All rights reserved.

Table 78. T0Control bits

Bit	Symbol	Description
7	T0StopRx	If set, the timer stops immediately after receiving the first 4 bits. If cleared the timer does not stop automatically. Note: If LFO Trimming is selected by T0Start, this bit has no effect
6	-	RFU
5 to 4	T0Start	00b: The timer is not started automatically 01b: The timer starts automatically at the end of the transmission 10b: Timer is used for LFO trimming without underflow (Start/Stop on PosEdge) 11b: Timer is used for LFO trimming with underflow (Start/Stop on PosEdge)
3	T0AutoRestart	1: the timer automatically restarts its count-down from T0ReloadValue, after the counter value has reached the value zero. 0: the timer decrements to zero and stops. The bit Timer1Irq is set to logic 1 when the timer underflows.
2	-	RFU
1 to 0	T0Clk	00b: The timer input clock is 13.56 MHz. 01b: The timer input clock is 211,875 kHz. 10b: The timer input clock is an underflow of Timer2. 11b: The timer input clock is an underflow of Timer1.

9.7.2.1 T0ReloadHi

High byte reload value of the Timer0.

Table 79. T0ReloadHi register (address 10h);

Bit	7	6	5	4	3	2	1	0
Symbol	T0Reload Hi							
Access rights	r/w							

Table 80. T0ReloadHi bits

Bit	Symbol	Description
7 to 0	T0ReloadHi	Defines the high byte of the reload value of the timer. With the start event the timer loads the value of the registers T0ReloadValHi, T0ReloadValLo. Changing this register affects the timer only at the next start event.

9.7.2.2 T0ReloadLo

Low byte reload value of the Timer0.

Table 81. T0ReloadLo register (address 11h);

Bit	7	6	5	4	3	2	1	0
Symbol	T0ReloadLo							
Access rights	r/w							

All information provided in this document is subject to legal disclaimers.

© NXP B.V. 2012. All rights reserved.

Table 82. T0ReloadLo bits

Bit	Symbol	Description
7 to0	T0ReloadLo	Defines the low byte of the reload value of the timer. With the start event the timer loads the value of the T0ReloadValHi, T0ReloadValLo. Changing this register affects the timer only at the next start event.

9.7.2.3 T0CounterValHi

High byte of the counter value of Timer0.

Table 83. T0CounterValHi register (address 12h)

Bit	7	6	5	4	3	2	1	0
Symbol	T0CounterHi							
Access rights	dy							

Table 84. T0CounterValHi bits

Bit	Symbol	Description
7to0	T0Counter ValHi	High byte value of the Timer0. This value shall not be read out during reception.

9.7.2.4 T0CounterValLo

Low byte of the counter value of Timer0.

Table 85. T0CounterValLo register (address 13h)

Bit	7	6	5	4	3	2	1	0
Symbol	T0CounterValLo							
Access rights	dy							

Table 86. T0CounterValLo bits

Bit	Symbol	Description
7 to 0	T0CounterValLo	Low byte value of the Timer0. This value shall not be read out during reception.

9.7.2.5 T1Control

Control register of the Timer1.

Table 87. T1Control register (address 14h);

Bit	7	6	5	4	3	2	1	0
Symbol	T1StopRx	-	T1Start		T1AutoRestart	-	T1Clk	
Access rights	r/w	RFU	r/w		r/w	RFU	r/w	

All information provided in this document is subject to legal disclaimers.

© NXP B.V. 2012. All rights reserved.

Table 88. T1Control bits

Bit	Symbol	Description
7	T1StopRx	If set, the timer stops after receiving the first 4 bits. If cleared, the timer is not stopped automatically. Note: If LFO trimming is selected by T1start, this bit has no effect
6	-	RFU
5 to 4	T1Start	00b: The timer is not started automatically 01b: The timer starts automatically at the end of the transmission 10b: Timer is used for LFO trimming without underflow (Start/Stop on PosEdge) 11b: Timer is used for LFO trimming with underflow (Start/Stop on PosEdge)
3	T1AutoRestart	Set to logic 1, the timer automatically restarts its countdown from T1ReloadValue, after the counter value has reached the value zero. Set to logic 0 the timer decrements to zero and stops. The bit Timer1IRq is set to logic 1 when the timer underflows.
2	-	RFU
1 to 0	T1Clk	00b: The timer input clock is 13.56 MHz 01b: The timer input clock is 211,875 kHz. 10b: The timer input clock is an underflow of Timer0 11b: The timer input clock is an underflow of Timer2

9.7.2.6 T1ReloadHi

High byte (MSB) reload value of the Timer1.

Table 89. T0ReloadHi register (address 15h)

Bit	7	6	5	4	3	2	1	0
Symbol	T1ReloadHi							
Access rights	r/w							

Table 90. T1ReloadHi bits

Bit	Symbol	Description
7 to 0	T1ReloadHi	Defines the high byte reload value of the Timer 1. With the start event the timer loads the value of the T1ReloadValHi and T1ReloadValLo. Changing this register affects the Timer only at the next start event.

9.7.2.7 T1ReloadLo

Low byte (LSB) reload value of the Timer1.

Table 91. T1ReloadLo register (address 16h)

Bit	7	6	5	4	3	2	1	0
Symbol	T1ReloadLo							
Access rights	r/w							

All information provided in this document is subject to legal disclaimers.

© NXP B.V. 2012. All rights reserved.

Table 92. T1ReloadValLo bits

Bit	Symbol	Description
7 to 0	T1ReloadLo	Defines the low byte of the reload value of the Timer1.With the start event the timer load the value of the T1ReloadValHi and T1ReloadValLo. Changing this register affects the timer only at the next start event.

9.7.2.8 T1CounterValHi

High byte (MSB) of the counter value of byte Timer1.

Table 93. T1CounterValHi register (address 17h)

Bit	7	6	5	4	3	2	1	0
Symbol	T1CounterValHi							
Access rights	dy							

Table 94. T1CounterValHi bits

Bit	Symbol	Description
7 to 0	T1Counter ValHi	High byte of the current value of the Timer1. This value shall not be read out during reception.

9.7.2.9 T1CounterValLo

Low byte (LSB) of the counter value of byte Timer1.

Table 95. T1CounterValLo register (address 18h)

Bit	7	6	5	4	3	2	1	0
Symbol	T1CounterValLo							
Access rights	dy							

Table 96. T1CounterValLo bits

Bit	Symbol	Description
7 to 0	T1Counter ValLo	Low byte of the current value of the counter 1. This value shall not be read out during reception.

9.7.2.10 T2Control

Control register of the Timer2.

Table 97. T2Control register (address 19h)

Bit	7	6	5	4	3	2	1	0
Symbol	T2StopRx	-	T2Start		T2AutoRestart	-	T2Clk	
Access rights	r/w	RFU	r/w		r/w	RFU	r/w	

All information provided in this document is subject to legal disclaimers.

© NXP B.V. 2012. All rights reserved.

Table 98. T2Control bits

Bit	Symbol	Description
7	T2StopRx	If set the timer stops immediately after receiving the first 4 bits. If cleared indicates, that the timer is not stopped automatically. Note: If LFO Trimming is selected by T2Start, this bit has no effect
6	-	RFU
5 to 4	T2Start	00b: The timer is not started automatically. 01b: The timer starts automatically at the end of the transmission. 10b: Timer is used for LFO trimming without underflow (Start/Stop on PosEdge). 11b: Timer is used for LFO trimming with underflow (Start/Stop on PosEdge).
3	T2AutoRestart	Set to logic 1, the timer automatically restarts its countdown from T2ReloadValue, after the counter value has reached the value zero. Set to logic 0 the timer decrements to zero and stops. The bit Timer2IRq is set to logic 1 when the timer underflows
2	-	RFU
1 to 0	T2Clk	00b: The timer input clock is 13.56 MHz. 01b: The timer input clock is 212 kHz. 10b: The timer input clock is an underflow of Timer0 11b: The timer input clock is an underflow of Timer1

9.7.2.11 T2ReloadHi

High byte of the reload value of Timer2.

Table 99. T2ReloadHi register (address 1Ah)

Bit	7	6	5	4	3	2	1	0
Symbol	T2ReloadHi							
Access rights	r/w							

Table 100. T2Reload bits

Bit	Symbol	Description
7 to 0	T2ReloadHi	Defines the high byte of the reload value of the Timer2. With the start event the timer load the value of the T2ReloadValHi and T2ReloadValLo. Changing this register affects the timer only at the next start event.

9.7.2.12 T2ReloadLo

Low byte of the reload value of Timer2.

Table 101. T2ReloadLo register (address 1Bh)

Bit	7	6	5	4	3	2	1	0
Symbol	T2ReloadLo							
Access rights	r/w							

All information provided in this document is subject to legal disclaimers.

© NXP B.V. 2012. All rights reserved.

Table 102. T2ReloadLo bits

Bit	Symbol	Description
7 to 0	T2ReloadLo	Defines the low byte of the reload value of the Timer2. With the start event the timer load the value of the T2ReloadValHi and T2RelaodVaLo. Changing this register affects the timer only at the next start event.

9.7.2.13 T2CounterValHi

High byte of the counter register of Timer2.

Table 103. T2CounterValHi register (address 1Ch)

Bit	7	6	5	4	3	2	1	0
Symbol	T2CounterHi							
Access rights	dy							

Table 104. T2CounterValHi bits

Bit	Symbol	Description
7 to 0	T2Counter ValHi	High byte current counter value of Timer2. This value shall not be read out during reception.

9.7.2.14 T2CounterValLoReg

Low byte of the current value of Timer 2.

Table 105. T2CounterValLo register (address 1Dh)

Bit	7	6	5	4	3	2	1	0
Symbol	T2CounterValLo							
Access rights	dy							

Table 106. T2CounterValLo bits

Bit	Symbol	Description
7 to 0	T2Counter ValLo	Low byte of the current counter value of Timer1Timer2. This value shall not be read out during reception.

9.7.2.15 T3Control

Control register of the Timer 3.

Table 107. T3Control register (address 1Eh)

Bit	7	6	5	4	3	2	1	0
Symbol	T3StopRx	-	T3Start		T3AutoRestart	-	T3Clk	
Access rights	r/w	RFU	r/w		r/w	RFU	r/w	

All information provided in this document is subject to legal disclaimers.

© NXP B.V. 2012. All rights reserved.

Table 108. T3Control bits

Bit	Symbol	Description
7	T3StopRx	If set, the timer stops immediately after receiving the first 4 bits. If cleared, indicates that the timer is not stopped automatically. Note: If LFO Trimming is selected by T3Start, this bit has no effect
6	-	RFU
5 to 4	T3Start	00b - timer is not started automatically 01b - timer starts automatically at the end of the transmission 10b - timer is used for LFO trimming without underflow (Start/Stop on PosEdge) 11b - timer is used for LFO trimming with underflow (Start/Stop on PosEdge)
3	T3AutoRestart	Set to logic 1, the timer automatically restarts its countdown from T3ReloadValue, after the counter value has reached the value zero. Set to logic 0 the timer decrements to zero and stops. The bit Timer1IRq is set to logic 1 when the timer underflows
2	-	RFU
1 to 0	T3Clk	00b - the timer input clock is 13.56 MHz. 01b - the timer input clock is 211,875 kHz. 10b - the timer input clock is an underflow of Timer0 11b - the timer input clock is an underflow of Timer1

9.7.2.16 T3ReloadHi

High byte of the reload value of Timer3.

Table 109. T3ReloadHi register (address 1Fh);

Bit	7	6	5	4	3	2	1	0
Symbol	T3ReloadHi							
Access rights	r/w							

Table 110. T3ReloadHi bits

Bit	Symbol	Description
7 to 0	T3ReloadHi	Defines the high byte of the reload value of the Timer3. With the start event the timer load the value of the T3ReloadValHi and T3ReloadValLo. Changing this register affects the timer only at the next start event.

9.7.2.17 T3ReloadLo

Low byte of the reload value of Timer3.

Table 111. T3ReloadLo register (address 20h)

Bit	7	6	5	4	3	2	1	0
Symbol	T3ReloadLo							
Access rights	r/w							

All information provided in this document is subject to legal disclaimers.

© NXP B.V. 2012. All rights reserved.

Table 112. T3ReloadLo bits

Bit	Symbol	Description
7 to 0	T3ReloadLo	Defines the low byte of the reload value of Timer3. With the start event the timer load the value of the T3ReloadValHi and T3RelaodValLo. Changing this register affects the timer only at the next start event.

9.7.2.18 T3CounterValHi

High byte of the current counter value the 16-bit Timer3.

Table 113. T3CounterValHi register (address 21h)

Bit	7	6	5	4	3	2	1	0
Symbol	T3CounterHi							
Access rights	dy							

Table 114. T3CounterValHi bits

Bit	Symbol	Description
7 to 0	T3Counter ValHi	High byte of the current counter value of Timer3. This value shall not be read out during reception.

9.7.2.19 T3CounterValLo

Low byte of the current counter value the 16-bit Timer3.

Table 115. T3CounterValLo register (address 22h)

Bit	7	6	5	4	3	2	1	0
Symbol	T3CounterValLo							
Access rights	dy							

Table 116. T3CounterValLo bits

Bit	Symbol	Description
7 to 0	T3Counter ValLo	Low byte current counter value of Timer3. This value shall not be read out during reception.

9.7.2.20 T4Control

The wake-up timer T4 activates the system after a given time. It can start a low-power card detection

Table 117. T4Control register (address 23h)

Bit	7	6	5	4	3	2	1	0
Symbol	T4Running	T4Start StopNow	T4Auto Trimm	T4Auto LPCD	T4Auto Restart	T4AutoWakeUp	T4Clk	
Access rights	dy	w	r/w	r/w	r/w	r/w	r/w	

All information provided in this document is subject to legal disclaimers.

© NXP B.V. 2012. All rights reserved.

Table 118. T4Control bits

Bit	Symbol	Description
7	T4Running	Shows if the timer T4 is running. If the bit T4StartStopNow is set, this bit and the timer T4 can be started/stopped.
6	T4Start StopNow	if set, the bit T4Running can be changed
5	T4AutoTrimm	If set to one, the timer activates an LPO trimming procedure when it underflows. For the T4AutoTrimm function, at least one timer (T0 to T3) has to be configured properly for trimming (T3 is not allowed if T4AutoLPCD is set in parallel).
4	T4AutoLPCD	If set to one, the timer activates a low-power card detection sequence. If a card is detected an interrupt request is raised and the system remains active if enabled. If no card is detected the CLRC663 enters the Power down mode if enabled. The timer is automatically restarted (no gap). Timer 3 is used to specify the time where the RF field is enabled to check if a card is present. Therefor you may not use Timer 3 for T4AutoTrimm in parallel.
3	T4AutoRestart	Set to logic 1, the timer automatically restarts its countdown from T4ReloadValue, after the counter value has reached the value zero. Set to logic 0 the timer decrements to zero and stops. The bit Timer4Irq is set to logic 1 at timer underflow.
2	T4AutoWakeUp	If set, the CLRC663 wakes up automatically, when the timer T4 has an underflow. This bit has to be set if the IC should enter the Power down mode after T4AutoTrimm and/or T4AutoLPCD is finished and no card has been detected. If the IC should stay active after one of these procedures this bit has to be set to 0.
1 to 0	T4Clk	00b - the timer input clock is the LFO clock 01b - the timer input clock is the LFO clock/8 10b - the timer input clock is the LFO clock/16 11b - the timer input clock is the LFO clock/32

9.7.2.21 T4ReloadHi

High byte of the reload value of the 16-bit timer 4.

Table 119. T4ReloadHi register (address 24h)

Bit	7	6	5	4	3	2	1	0
Symbol	T4ReloadHi							
Access rights	r/w							

Table 120. T4ReloadHi bits

Bit	Symbol	Description
7 to 0	T4ReloadHi	Defines high byte of the for the reload value of timer 4. With the start event the timer 4 loads the T4ReloadVal. Changing this register affects the timer only at the next start event

9.7.2.22 T4ReloadLo

Low byte of the reload value of the 16-bit timer 4.

All information provided in this document is subject to legal disclaimers.

© NXP B.V. 2012. All rights reserved.

Table 121. T4ReloadLo register (address 25h)

Bit	7	6	5	4	3	2	1	0
Symbol	T4ReloadLo							
Access rights	r/w							

Table 122. T4ReloadLo bits

Bit	Symbol	Description
7 to 0	T4ReloadLo	Defines the low byte of the reload value of the timer 4. With the start event the timer loads the value of the T4ReloadVal. Changing this register affects the timer only at the next start event.

9.7.2.23 T4CounterValHi

High byte of the counter value of the 16-bit timer 4.

Table 123. T4CounterValHi register (address 26h)

Bit	7	6	5	4	3	2	1	0
Symbol	T4CounterValHi							
Access rights	dy							

Table 124. T4CounterValHi bits

Bit	Symbol	Description
7 to 0	T4CounterValHi	High byte of the current counter value of timer 4.

9.7.2.24 T4CounterValLo

Low byte of the counter value of the 16-bit timer 4.

Table 125. T4CounterValLo register (address 27h)

Bit	7	6	5	4	3	2	1	0
Symbol	T4CounterValLo							
Access rights	dy							

Table 126. T4CounterValLo bits

Bit	Symbol	Description
7 to 0	T4CounterValLo	Low byte of the current counter value of the timer 4.

9.8 Transmitter configuration registers

9.8.1 TxMode

Table 127. DrvMode register (address 28h)

Bit	7	6	5	4	3	2	1	0
Symbol	Tx2Inv	Tx1Inv	-	-	TxEn	TxClk Mode		
Access rights	r/w	r/w	RFU	RFU	r/w	r/w		

All information provided in this document is subject to legal disclaimers.

© NXP B.V. 2012. All rights reserved.

Table 128. DrvMode bits

Bit	Symbol	Description
7	Tx2Inv	Inverts transmitter 2 at TX2 pin
6	Tx1Inv	Inverts transmitter 1 at TX1 pin
5		RFU
4	-	RFU
3	TxEn	If set to 1 both transmitter pins are enabled
2 to 0	TxClkMode	Transmitter clock settings (see 8.6.2. Table 27). Codes 011b and 0b110 are not supported. This register defines, if the output is operated in open drain, push-pull, at high impedance or pulled to a fix high or low level.

9.8.2 TxAmp

With the set_cw_amplitude register output power can be traded off against power supply rejection. Spending more headroom leads to better power supply rejection ration and better accuracy of the modulation degree.

With CwMax set, the voltage of TX1 will be pulled to the maximum possible. This register overrides the settings made by set_cw_amplitude.

Table 129. TxAmp register (address 29h)

Bit	7	6	5	4	3	2	1	0
Symbol	set_cw_amplitude		-	set_residual_carrier				
Access rights	r/w		RFU	r/w				

Table 130. TxAmp bits

Bit	Symbol	Description
7 to 6	set_cw_amplitude	Allows to reduce the output amplitude of the transmitter by a fix value. Four different preset values that are subtracted from TVDD can be selected: 0: TVDD -100 mV 1: TVDD -250 mV 2: TVDD -500 mV 3: T_{VDD} -1000 mV
5	RFU	-
4 to 0	set_residual_ carrier	Set the residual carrier percentage. refer to Section 8.6.2

9.8.3 TxCon

Table 131. TxCon register (address 2Ah)

Bit	7	6	5	4	3	2	1	0
Symbol	OvershootT2				CwMax	TxInv	TxSel	
Access rights	r/w				r/w	r/w	r/w	

All information provided in this document is subject to legal disclaimers.

© NXP B.V. 2012. All rights reserved.

Table 132. TxCon bits

Bit	Symbol	Description
7 to 4	OvershootT2	Specifies the length (number of carrier clocks) of the additional modulation for overshoot prevention. Refer to Section 8.6.2.1 "Overshoot protection"
3	Cwmax	Set amplitude of continuous wave carrier to the maximum. If set, set_cw_amplitude in Register TxAmp has no influence on the continuous amplitude.
2	TxInv	If set, the resulting modulation signal defined by TxSel is inverted
1 to 0	TxSel	Defines which signal is used as source for modulation 00b ... no modulation 01b ... TxEnvelope 10b ... SigIn 11b ... RFU

9.8.4 TxI

Table 133. TxI register (address 2Bh)

Bit	7	6	5	4	3	2	1	0
Symbol	OvershootT1				tx_set_iLoad			
Access rights	r/w				r/w			

Table 134. TxI bits

Bit	Symbol	Description
7 to 4	OvershootT1	Overshoot value for Timer1. Refer to Section 8.6.2.1 "Overshoot protection"
3 to 0	tx_set_iLoad	Factory trim value, sets the expected Tx load current.

9.9 CRC configuration registers

9.9.1 TxCrcPreset

Table 135. TXCrcPreset register (address 2Ch)

Bit	7	6	5	4	3	2	1	0
Symbol	RFU	TXPresetVal			TxCRCtype		TxCRCInvert	TxCRCEn
Access rights	-	r/w			r/w		r/w	r/w

Table 136. TxCrcPreset bits

Bit	Symbol	Description
7	RFU	-
6 to 4	TXPresetVal	Specifies the CRC preset value for transmission (see Table 137).

All information provided in this document is subject to legal disclaimers.

© NXP B.V. 2012. All rights reserved.

Table 136. TxCrcPreset bits

Bit	Symbol	Description
3 to 2	TxCRCtype	Defines which type of CRC (CRC8/CRC16/CRC5) is calculated: • 00h -- CRC5 • 01h -- CRC8 • 02h -- CRC16 • 03h -- RFU
1	TxCRCInvert	if set, the resulting CRC is inverted and attached to the data frame (ISO/IEC 3309)
0	TxCRCEn	if set, a CRC is appended to the data stream

Table 137. Transmitter CRC preset value configuration

TXPresetVal[6...4]	CRC16	CRC8	CRC5
0h	0000h	00h	00h
1h	6363h	12h	12h
2h	A671h	BFh	-
3h	FFFEh	FDh	-
4h	-	-	-
5h	-	-	-
6h	User defined	User defined	User defined
7h	FFFFh	FFh	1Fh

Remark: User defined CRC preset values can be configured by EEprom (see Section 8.7.2.1, Table 34 “Configuration area (Page 0)”).

9.9.2 RxCrcCon

Table 138. RxCrcCon register (address 2Dh)

Bit	7	6	5	4	3	2	1	0
Symbol	RxForceCRCWrite	RXPresetVal			RXCRCtype		RxCRCInvert	RxCRCEn
Access rights	r/w	r/w			r/w		r/w	r/w

Table 139. RxCrcCon bits

Bit	Symbol	Description
7	RxForceCrc Write	If set, the received CRC byte(s) are copied to the FIFO. If cleared CRC Bytes are only checked, but not copied to the FIFO. This bit has to be always set in case of a not byte aligned CRC (e.g. ISO/IEC 18000-3 mode 3/ EPC Class-1HF)
6 to 4	RXPresetVal	Defines the CRC preset value (Hex.) for transmission. (see Table 140).

All information provided in this document is subject to legal disclaimers.

© NXP B.V. 2012. All rights reserved.

Table 139. RxCrcCon bits

Bit	Symbol	Description
3 to 2	RxCRCtype	Defines which type of CRC (CRC8/CRC16/CRC5) is calculated: • 00h -- CRC5 • 01h -- CRC8 • 02h -- CRC16 • 03h -- RFU
1	RxCrcInvert	If set, the CRC check is done for the inverted CRC.
0	RxCrcEn	If set, the CRC is checked and in case of a wrong CRC an error flag is set. Otherwise the CRC is calculated but the error flag is not modified.

Table 140. Receiver CRC preset value configuration

RXPresetVal[6...4]	CRC16	CRC8	CRC5
0h	0000h	00h	00h
1h	6363h	12h	12h
2h	A671h	BFh	-
3h	FFFEh	FDh	-
4h	-	-	-
5h	-	-	-
6h	User defined	User defined	User defined
7h	FFFFh	FFh	1Fh

9.10 Transmitter configuration registers

9.10.1 TxDataNum

Table 141. TxDataNum register (address 2Eh)

Bit	7	6	5	4	3	2	1	0
Symbol	RFU	RFU-	RFU-	KeepBitGrid	DataEn	TxLastBits		
Access rights				r/w	r/w	r/w		

Table 142. TxDataNum bits

Bit	Symbol	Description
7 to 5	RFU	-
4	KeepBitGrid	If set, the time between consecutive transmissions starts is a multiple of the ETU.
3	DataEn	If cleared - it is possible to send a single symbol pattern If set - data is sent
2 to 0	TxLastBits	Defines how many bits of the last data byte to be sent. If set to 000b all bits of the last data byte are sent. Note - bits are skipped at the end of the byte. Example - Data byte B2h (sent LSB first). TxLastBits = 011b (3h) => 010b (LSB first) is sent TxLastBits = 110b (6h) => 010011b (LSB first) is sent

All information provided in this document is subject to legal disclaimers.

© NXP B.V. 2012. All rights reserved.

9.10.2 TxDATAModWidth

Transmitter data modulation width register

Table 143. TxDataModWidth register (address 2Fh)

Bit	7	6	5	4	3	2	1	0
Symbol	DModWidth							
Access rights	r/w							

Table 144. TxDataModWidth bits

Bit	Symbol	Description
7 to 0	DModWidth	Specifies the length of a pulse for sending data with enabled pulse modulation. The length is given by the number of carrier clocks + 1. A pulse can never be longer than from the start of the pulse to the end of the bit. The starting position of a pulse is given by the setting of TxDataMod.DPulseType. Note: This register is only used if Miller modulation (ISO/IEC 14443A PCD) is used. The settings are also used for the modulation width of start and/or stop symbols.

All information provided in this document is subject to legal disclaimers.

© NXP B.V. 2012. All rights reserved.

9.10.3 TxSym10BurstLen

If a protocol requires a burst (an unmodulated subcarrier) the length can be defined with this TxSymBurstLen, the value high or low can be defined by TxSym10BurstCtrl.

Table 145. TxSym10BurstLen register (address 30h)

Bit	7	6	5	4	3	2	1	0
Symbol	RFU	Sym1Burst Len			RFU	Sym0Burst Len		
Access rights	-	r/w			-	r/w		

Table 146. TxSym10BurstLen bits

Bit	Symbol	Description
7	RFU	-
6 to 4	Sym1BurstLen	Specifies the number of bits issued for symbol 1 burst. The 3 bits encodes a range from 8 to 256 bit: 00h - 8bit 01h - 16bit 02h - 32bit 04h - 48bit 05h - 64bit 06h - 96bit 07h - 128bit 08h - 256bit
3	RFU	-
2 to 0	Sym0BurstLen	Specifies the number of bits issued for symbol 1 burst. The 3 bits encodes a range from 8 to 256 bit: 00h - 8bit 01h - 16bit 02h - 32bit 03h - 48bit 04h - 64bit 05h - 96bit 06h - 128bit 07h - 256bit

9.10.4 TxWaitCtrl

Table 147. TxWaitCtrl register (address 31h); reset value: C0h

Bit	7	6	5	4	3	2	1	0
Symbol	TxWaitStart	TxWaitEtu	TxWait High			TxStopBitLength		
Access rights	r/w	r/w	r/w			r/w		

All information provided in this document is subject to legal disclaimers.

© NXP B.V. 2012. All rights reserved.

Table 148. TXWaitCtrl bits

Bit	Symbol	Description
7	TxWaitStart	If cleared, the TxWait time is starting at the End of the send data (TX) If set, the TxWait time is starting at the End of the received data (RX)
6	TxWaitEtu	If cleared, the TxWait time is TxWait × 16/13.56 MHz If set, the TxWait time is TxWait × 0.5 / DBFreq (DBFreq is the frequency of the bit stream as defined by TxDataCon)
5 to 3	TxWait High	Bit extension of TxWaitLo. TxWaitCtrl bit 5 is MSB.
2 to 0	TxStopBitLength	Defines stop-bits and EGT (= stop-bit + extra guard time EGT) to be send 0h: no stop-bit, no EGT 1h: 1 stop-bit, no EGT 2h: 1 stop-bit + 1 EGT 3h: 1 stop-bit + 2 EGT 4h: 1 stop-bit + 3 EGT 5h: 1 stop-bit + 4 EGT 6h: 1 stop-bit + 5 EGT 7h: 1 stop-bit + 6 EGT Note: This is only valid for ISO/IEC14443 Type B

All information provided in this document is subject to legal disclaimers.

© NXP B.V. 2012. All rights reserved.

9.10.5 TxWaitLo

Table 149. TxWaitLo register (address 32h)

Bit	7	6	5	4	3	2	1	0
Symbol	TxWaitLo							
Access rights	r/w							

Table 150. TxWaitLo bits

Bit	Symbol	Description
7 to 0	TxWaitLo	Defines the minimum time between receive and send or between two send data streams Note: TxWait is a 11bit register (additional 3 bits are in the TxWaitCtrl register)! See also TxWaitEtu and TxWaitStart.

9.11 FrameCon

Table 151. FrameCon register (address 33h)

Bit	7	6	5	4	3	2	1	0
Symbol	TxParityEn	RxParityEn	-	-	StopSym		StartSym	
Access rights	r/w	r/w	RFU	RFU	r/w		r/w	

Table 152. FrameCon bits

Bit	Symbol	Description
7	TxParityEn	If set, a parity bit is calculated and appended to each byte transmitted
6	RxParityEn	If set, the parity calculation is enabled. The parity is not transferred to the FIFO
5 to 4	-	RFU
3 to 2	StopSym	Defines which symbol is sent as stop-symbol • 0h: No symbol is sent • 1h: Symbol1 is sent • 2h symbol2 is sent • 3h Symbol3 is sent
1 to 0	StartSym	Defines which symbol is sent as start-symbol • 0h: No symbol is sent • 1h: Symbol1 is sent • 2h symbol2 is sent • 3h Symbol3 is sent

All information provided in this document is subject to legal disclaimers.

© NXP B.V. 2012. All rights reserved.

9.12 Receiver configuration registers

9.12.1 RxSofD

Table 153. RxSofD register (address 34h)

Bit	7	6	5	4	3	2	1	0
Symbol	RFU		SOF_En	SOFDetected	RFU	SubC_En	SubC_Detected	SubC_Present
Access rights	-		r/w	dy	-	r/w	dy	r

Table 154. RxSofD bits

Bit	Symbol	Description
7 to 6	RFU	-
5	SOF_En	If set and a SOF is detected an RxSOFIrq is raised
4	SOF_Detected	Shows that a SOF is or was detected. Can be cleared by SW
3	RFU	-
2	SubC_En	If set and a subcarrier is detected an RxSOFIrq is raised.
1	SubC_Detected	Shows that a subcarrier is or was detected. Can be cleared by SW
0	SubC_Present	Shows that a subcarrier is currently detected.

9.12.2 RxCtrl

Table 155. RxCtrl register (address 35h)

Bit	7	6	5	4	3	2	1	0
Symbol	RxAllowBits	RxMultiple	RxEOFType	EGT_Check	EMD_Sup	Baudrate		
Access rights	r/w	r/w	r/w	r/w	r/w	r/w		

Table 156. RxCtrl bits

Bit	Symbol	Description
7	RxAllowBits	If set, data is written into FIFO even if CRC is enabled, and no complete byte has been received.
6	RxMultiple	If set, RxMultiple is activated and the receiver will not terminate automatically (refer Section 8.10.3.6 “Receive command”). If set to logic 1, at the end of a received data stream an error byte is added to the FIFO. The error byte is a copy of the Error register.
5	RxEOFType	0: EOF as defined in the RxEOFSymbolReg is expected. 1: ISO/IEC14443B EOF is expected. Note: Clearing this bit to 0 and clearing bit 0 and bit 1 in the RxEOFSymbolReg disables the EOF check

All information provided in this document is subject to legal disclaimers.

© NXP B.V. 2012. All rights reserved.

Table 156. RxCtrl bits

Bit	Symbol	Description
4	EGT_Check	If set to 1, the EGT is checked and if it is too long a protocol error is set. (This is only valid for ISO/IEC14443 Type B)
3	EMD_Sup	Enables the EMD suppression according ISO/IEC14443. If an error occurs within the first three bytes, these three bytes are assumed to be EMD, ignored and the FIFO is reset. A collision is treated as an error as well If a valid SOF was received, the EMD_Sup is set and a frame of less than 3 bytes had been received. RX_IRq is not set in this EMD error cases. If RxForceCRCWrite is set, the FIFO should not be read out before three bytes are written into.
2 to 0	Baudrate	Defines the baud rate of the receiving signal. 2h: 26 kBd 3h: 52 kBd 4h: 106 kBd 5h: 212 kBd 6h: 424 kBd 7h: 847 kBd all remaining values are RFU

9.12.3 RxWait

Selects internal receiver settings.

Table 157. RxWait register (address 36h)

Bit	7	6	5	4	3	2	1	0
Symbol	RxWaitEtu	RxWait						
Access rights	r/w	r/w						

Table 158. RxWait bits

Bit	Symbol	Description
7	RXWaitEtu	If set to 0, the RxWait time is RxWait × 16/13.56 MHz If set to 1, the RxWait time is RxWait × (0.5/DBFreq)
6 to 0	RxWait	Defines the time after sending, where every input is ignored.

9.12.4 RxThreshold

Selects minimum threshold level for the bit decoder.

Table 159. RxThreshold register (address 37h)

Bit	7	6	5	4	3	2	1	0
Symbol	MinLevel				MinLevelP			
Access rights	r/w				r/w			

All information provided in this document is subject to legal disclaimers.

© NXP B.V. 2012. All rights reserved.

Table 160. RxThreshold bits

Bit	Symbol	Description
7 to 4	MinLevel	Defines the MinLevel of the reception. Note: The MinLevel should be higher than the noise level in the system
3 to 0	MinLevelP	Defines the MinLevel of the phase shift detector unit

9.12.5 Rcv

Table 161. Rcv register (address 38h)

Bit	7	6	5	4	3	2	1	0
Symbol	Rcv_Rx_single	RFU	SigInSel		RFU		CollLevel	
Access rights	r/w	-	r/w		-		r/w	

Table 162. Rcv bits

Bit	Symbol	Description
7	Rcv_Rx_single	Single RXP Input Pin Mode; 0: Fully Differential; 1: Quasi-Differential
6	RFU	-
5 to 4	SigInSel	Defines input for the signal processing unit 0h - idle 1h - internal analog block (RX) 2h - signal in over envelope (ISO/IEC14443A) 3h - signal in over s3c-generic
3 to 2	RFU	-
1 to 0	CollLevel	Defines the strength of a signal to be interpreted as a collision: 0h - Collision has at least 1/8 of signal strength 1h - Collision has at least 1/4 of signal strength 2h - Collision has at least 1/2 of signal strength 3h - Collision detection is switched off.

9.12.6 RxAna

This register allows to set the gain (rcv_gain) and high pass corner frequencies (rcv_hpcf).

Table 163. RxAna register (address 39h)

Bit	7	6	5	4	3	2	1	0
Symbol	VMid_r_sel		RFU		rcv_hpcf		rcv_gain	
Access rights	r/w		-		r/w		r/w	

All information provided in this document is subject to legal disclaimers.

© NXP B.V. 2012. All rights reserved.

Table 164. RxAna bits

Bit	Symbol	Description
7, 6	VMid_r_setl	Factory trim value, needs to be 0
5, 4	RFU	
3, 2	rcv_hpcf	The rcv_hpcf [1:0] signals allow 4 different settings of the base band amplifier lower cut-off frequency from ~40 kHz to ~300 kHz.
1 to 0	rcv_gain	With rcv_gain[1:0] four different gain settings from 30 dB and 60 dB can be configured (differential output voltage/differential input voltage)

Table 165. Effect of gain and highpass corner register settings

rcv_gain (Hex.)	rcv_hpcf (Hex.)	fl (kHz)	fU (MHz)	gain (dB20)	bandwith (MHz)
03	00	38	2,3	60	2,3
03	01	79	2,4	59	2,3
03	02	150	2,6	58	2,5
03	03	264	2,9	55	2,6
02	00	41	2,3	51	2,3
02	01	83	2,4	50	2,3
02	02	157	2,6	49	2,4
02	03	272	3,0	41	2,7
01	00	42	2,6	43	2,6
01	01	84	2,7	42	2,6
01	02	157	2,9	41	2,7
01	03	273	3,3	39	3,0
00	00	43	2,6	35	2,6
00	01	85	2,7	34	2,6
00	02	159	2,9	33	2,7
00	03	276	3,4	30	3,1

9.13 Clock configuration

9.13.1 SerialSpeed

This register allows to set speed of the RS232 interface. The default speed is set to 9,6kbit/s. The transmission speed of the interface can be changed by modifying the entries for BR_T0 and BR_T1. The transfer speed can be calculated by using the following formulas:

BR_T0 = 0: transfer speed = 27.12 MHz / (BR_T1 + 1)

BR_T0 > 0: transfer speed = 27.12 MHz / (BR_T1 + 33) / 2^(BR_T0 – 1)

The framing is implemented with 1 startbit, 8 databits and 1 stop bit. A parity bit is not used. Transfer speeds above 1228,8 kbit/s are not supported.

All information provided in this document is subject to legal disclaimers.

© NXP B.V. 2012. All rights reserved.

Table 166. SerialSpeed register (address3Bh); reset value: 7Ah

Bit	7	6	5	4	3	2	1	0
Symbol	BR_T0			BR_T1				
Access rights	r/w			r/w				

Table 167. SerialSpeed bits

Bit	Symbol	Description
7 to 5	BR_T0	BR_T0 = 0: transfer speed = 27.12 MHz / (BR_T1 + 1) BR_T0 > 0: transfer speed = 27.12 MHz / (BR_T1 + 33) / 2^(BR_T0 – 1)
4 to 0	BR_T1	BR_T0 = 0: transfer speed = 27.12 MHz / (BR_T1 + 1) BR_T0 > 0: transfer speed = 27.12 MHz / (BR_T1 + 33) / 2^(BR_T0 – 1)

Table 168. RS232 speed settings

Transfer speed (kbit/s)	SerialSpeed register content (Hex.)
7,2	FA
9,6	EB
14,4	DA
19,2	CB
38,4	AB
57,6	9A
115,2	7A
128,0	74
230,4	5A
460,8	3A
921,6	1C
1228,8	15

9.13.2 LPO_Trimm

Table 169. LPO_Trim register (address 3Ch)

Bit	7	6	5	4	3	2	1	0
Symbol	lpo_trimm							
Access rights	r/w							

Table 170. LPO_Trim bits

Bit	Symbol	Description
7 to 0	lpo_trimm	Trimm value. Refer to Section 8.8.3 “Low-Power Oscillator (LPO)” Note: If the trimm value is increased, the frequency of the oscillator decreases

All information provided in this document is subject to legal disclaimers.

© NXP B.V. 2012. All rights reserved.

9.13.3 PLL_Ctrl Register

The PLL_Ctrl register implements the control register for the IntegerN PLL. Two stages exist to create the ClkOut signal from the 27,12MHz input. In the first stage the 27,12Mhz input signal is multiplied by the value defined in PLLDiv_FB and divided by two, and the second stage divides this frequency by the value defined by PLLDIV_Out.

Table 171. PLL_Ctrl register (address3Dh)

Bit	7	6	5	4	3	2	1	0
Symbol	ClkOutSel				ClkOut_En	PLL_PD	PLLDiv_FB	
Access rights	r/w				r/w	r/w	r/w	

Table 172. PLL_Ctrl register bits

Bit	Symbol	Description
7 to 4	CLkOutSel	• 0h - pin CLKOUT is used as I/O • 1h - pin CLKOUT shows the output of the analog PLL • 2h - pin CLKOUT is hold on 0 • 3h - pin CLKOUT is hold on 1 • 4h - pin CLKOUT shows 27.12 MHz from the crystal • 5h - pin CLKOUT shows 13.56 MHz derived from the crystal • 6h - pin CLKOUT shows 6.78 MHz derived from the crystal • 7h - pin CLKOUT shows 3.39 MHz derived from the crystal • 8h - pin CLKOUT is toggled by the Timer0 overflow • 9h - pin CLKOUT is toggled by the Timer1 overflow • Ah - pin CLKOUT is toggled by the Timer2 overflow • Bh - pin CLKOUT is toggled by the Timer3 overflow • Ch...Fh - RFU
3	ClkOut_En	Enables the clock at Pin CLKOUT
2	PLL_PD	PLL power down
1-0	PLLDiv_FB	PLL feedback divider (see table 174)

Table 173. Setting of feedback divider PLLDiv_FB [1:0]

Bit 1	Bit 0	Division
0	0	23 (VCO frequency 312Mhz)
0	1	27 (VCO frequency 366MHz)
1	0	28 (VCO frequency 380Mhz)
1	1	23 (VCO frequency 312Mhz)

9.13.4 PLLDiv_Out

Table 174. PLLDiv_Out register (address 3Eh)

Bit	7	6	5	4	3	2	1	0
Symbol	PLLDiv_Out							
Access rights	r/w							

All information provided in this document is subject to legal disclaimers.

© NXP B.V. 2012. All rights reserved.

Table 175. PLLDiv_Out bits

Bit	Symbol	Description
7 to 0	PLLDiv_Out	PLL output divider factor; Refer to Section 8.8.2

Table 176. Setting for the output divider ratio PLLDiv_Out [7:0]

Value	Division
0	RFU
1	RFU
2	RFU
3	RFU
4	RFU
5	RFU
6	RFU
7	RFU
8	8
9	9
10	10
...	...
253	253
254	254

9.14 Low-power card detection configuration registers

The LPCD registers contain the settings for the low-power card detection. The setting for LPCD_IMax (6 bits) is done by the two highest bits (bit 7, bit 6) of the registers LPCD_QMin, LPCD_QMax and LPCD_IMin each.

9.14.1 LPCD_QMin

Table 177. LPCD_QMin register (address 3Fh)

Bit	7	6	5	4	3	2	1	0
Symbol	LPCD_IMax.5	LPCD_IMax.4	LPCD_QMin					
Access rights	r/w	r/w	r/w					

Table 178. LPCD_QMin bits

Bit	Symbol	Description
7, 6	LPCD_IMax	Defines the highest two bits of the higher border for the LPCD. If the measurement value of the I channel is higher than LPCD_IMax, a LPCD interrupt request is indicated by bit IRQ0.LPCDIrq
5 to 0	LPCD_QMin	Defines the lower border for the LPCD. If the measurement value of the Q channel is higher than LPCD_QMin, a LPCDinterrupt request is indicated by bit IRQ0.LPCDIrq

All information provided in this document is subject to legal disclaimers.

© NXP B.V. 2012. All rights reserved.

9.14.2 LPCD_QMax

Table 179. LPCD_QMax register (address 40h)

Bit	7	6	5	4	3	2	1	0
Symbol	LPCD_IMax.3	LPCD_IMax.2	LPCD_QMax					
Access rights	r/w	r/w	r/w					

Table 180. LPCD_QMax bits

Bit	Symbol	Description
7	LPCD_IMax.3	Defines the bit 3 of the high border for the LPCD. If the measurement value of the I channel is higher than LPCD IMax, a LPCD IRQ is raised
6	LPCD_IMax.2	Defines the bit 2 of the high border for the LPCD. If the measurement value of the I channel is higher than LPCD IMax, a LPCD IRQ is raised
5 to 0	LPCD_QMax	Defines the high border for the LPCD. If the measurement value of the Q channel is higher than LPCD QMax, a LPCD IRQ is raised

9.14.3 LPCD_IMin

Table 181. LPCD_IMin register (address 41h)

Bit	7	6	5	4	3	2	1	0
Symbol	LPCD_IMax.1	LPCD_IMax.0	LPCD_IMin					
Access rights	r/w	r/w	r/w					

Table 182. LPCD_IMin bits

Bit	Symbol	Description
7 to 6	LPCD_IMax	Defines lowest two bits of the higher border for the low-power card detection (LPCD). If the measurement value of the I channel is higher than LPCD IMax, a LPCD IRQ is raised.
5 to 0	LPCD_IMin	Defines the lower border for the ow power card detection. If the measurement value of the I channel is lower than LPCD IMin, a LPCD IRQ is raised.

9.14.4 LPCD_Result_I

Table 183. LPCD_Result_I register (address 42h)

Bit	7	6	5	4	3	2	1	0
Symbol	RFU-	RFU-	LPCD_Result_I					
Access rights	-	-	r					

Table 184. LPCD_I_Result bits

Bit	Symbol	Description
7 to 6	RFU	-
5 to 0	LPCD_Result_I	Shows the result of the last low-power card detection (I-Channel)

All information provided in this document is subject to legal disclaimers.

© NXP B.V. 2012. All rights reserved.

9.14.5 LPCD_Result_Q

Table 185. LPCD_Result_Q register (address 43h)

Bit	7	6	5	4	3	2	1	0
Symbol	RFU	LPCD_Irq_Clr	LPCD_Reslult_Q					
Access rights		r/w	r					

Table 186. LPCD_Q_Result bits

Bit	Symbol	Description
7	RFU	-
6	LPCD_Irq_Clr	If set no LPCD IRQ is raised any more until the next low-power card detection procedure. Can be used by software to clear the interrupt source
5 to 0	LPCD_Q_Result	Shows the result of the last ow power card detection (Q-Channel)

9.15 Pin configuration

9.15.1 PinEn

Table 187. PinEn register (address 44h)

Bit	7	6	5	4	3	2	1	0
Symbol	SIGIN_EN	CLKOUT_EN	IFSEL1_EN	IFSEL0_EN	TCK_EN	TDI_EN	TDO_EN	TMS_EN
Access rights	r/w	r/w	r/w	r/w	r/w	r/w	r/w	r/w

Table 188. PinEn bits

Bit	Symbol	Description
7	SIGIN_EN	Enables the output functionality on SIGIN (pin 5). The pin is then used as I/O then.
6	CLKOUT_EN	Enables the output functionality of the CLKOUT (pin 22). The pin is then used as I/O then. The CLKOUT function is switched off
5	IFSEL1_EN	Enables the output functionality of the IFSEL1 (pin 27). The pin is then used as I/O then.
4	IFSEL0_EN	Enables the output functionality of the IFSEL0 (pin 26). The pin is then used as I/O then.
3	TCK_EN	Enables the output functionality of the TCK (pin 4) of the boundary scan interface. The pin is then used as I/O. If the boundary scan is activated in EEPROM, this bit has no function.
2	TDI_EN	Enables the output functionality of the TDI (pin 2) of the boundary scan interface. The pin is then used as I/O. If the boundary scan is activated in EEPROM, this bit has no function.
1	TDO_EN	Enables the output functionality of the TDO (pin 1) of the boundary scan interface. The pin is then used as I/O. If the boundary scan is activated in EEPROM, this bit has no function.
0	TMS_EN	Enables the output functionality of the TMS (pin 3) of the boundary scan interface. The pin is then used as I/O. If the boundary scan is activated in EEPROM, this bit has no function.

All information provided in this document is subject to legal disclaimers.

© NXP B.V. 2012. All rights reserved.

9.15.2 PinOut

Table 189. PinOut register (address 45h)

Bit	7	6	5	4	3	2	1	0
Symbol	SIGIN_OUT	CLKOUT_OUT	IFSEL1_OUT	IFSEL0_OUT	TCK_OUT	TMI_OUT	TDO_OUT	TMS_OUT
Access rights	r/w	r/w	r/w	r/w	r/w	r/w	r/w	r/w

Table 190. PinOut bits

Bit	Symbol	Description
7	SIGIN_OUT	Output buffer of the SIGIN pin
6	CLKOUT_OUT	Output buffer of the CLKOUT pin
5	IFSEL1_OUT	Output buffer of the IFSEL1 pin
4	IFSEL0_OUT	Output buffer of the IFSEL0 pin
3	TCK_OUT	Output buffer of the TCK pin
2	TDI_OUT	Output buffer of the TDI pin
1	TDO_OUT	Output buffer of the TDO pin
0	TMS_OUT	Output buffer of the TMS pin

9.15.3 PinIn

Table 191. PinIn register (address 46h)

Bit	7	6	5	4	3	2	1	0
Symbol	SIGIN_IN	CLKOUT_IN	IFSEL1_IN	IFSEL0_IN	TCK_IN	TDI_IN	TDO_IN	TMS_IN
Access rights	r	r	r	r	r	r	r	r

Table 192. PinIn bits

Bit	Symbol	Description
7	SIGIN_IN	Input buffer of the SIGIN pin
6	CLKOUT_IN	Input buffer of the CLKOUT pin
5	IFSEL1_IN	Input buffer of the IFSEL1 pin
4	IFSEL0_IN	Input buffer of the IFSEL0 pin
3	TCK_IN	Input buffer of the TCK pin
2	TDI_IN	Input buffer of the TDI pin
1	TDO_IN	Input buffer of the TDO pin
0	TMS_IN	Input buffer of the TMS pin

9.15.4 SigOut

Table 193. SigOut register (address 47h)

Bit	7	6	5	4	3	2	1	0
Symbol	Pad Speed	RFU			SigOutSel			
Access rights	r/w	-			r/w			

All information provided in this document is subject to legal disclaimers.

© NXP B.V. 2012. All rights reserved.

Table 194. SigOut bits

Bit	Symbol	Description
7	PadSpeed	If set, the I/O pins are supporting a fast switching mode.The fast mode for the I/O's will increase the peak current consumption of the device, especially if multiple I/Os are switching at the same time. The power supply needs to be designed to deliver this peak currents.
6 to 4	RFU	-
3 to 0	SIGOutSel	0h, 1h - The pin SIGOUT is 3-state 2h - The pin SIGOUT is 0 3h - The pin SIGOUT is 1 4h - The pin SIGOUT shows the TX-envelope 5h - The pin SIGOUT shows the TX-active signal 6h - The pin SIGOUT shows the S3C (generic) signal 7h - The pin SIGOUT shows the RX-envelope (only valid for ISO/IEC 14443A, 106 kBd) 8h - The pin SIGOUT shows the RX-active signal 9h - The pin SIGOUT shows the RX-bit signal

9.16 Transmitter configuration registers

9.16.1 TxBitMod

Table 195. TxBitMod register (address 48h)

Bit	7	6	5	4	3	2	1	0
Symbol	TxMSBFirst	RFU	TxParity Type	RFU	TxStopBitType	RFU	TxStartBitType	TxStartBitEn
Access rights	r/w	-	r/w	-	r/w	-	r/w	r/w

Table 196. TxBitMod bits

Bit	Symbol	Description
7	TxMSBFirst	If set, data is interpreted MSB first for data transmission. If cleared, data is interpreted LSB first.
6	RFU	-
5	TxParityType	Defines the type of the parity bit. If set to 1, odd parity is calculated, otherwise even parity is calculated
4	RFU	-
3	TxStopBitType	Defines the type of the stop-bit (0b: logic zero / 1b: logic one)
2	RFU	-
1	TxStartBitType	Defines the type of the start-bit (0b: logic zero / 1b: logic one)
0	TxStartBitEn	If set to 1, a start-bit will be sent

All information provided in this document is subject to legal disclaimers.

© NXP B.V. 2012. All rights reserved.

9.16.2 TxDataCon

Table 197. TxDataCon (address 4Ah)

Bit	7	6	5	4	3	2	1	0
Symbol	DCodeType				DSCFreq	DSCFreq		
Access rights	r/w				r/w	r/w		

Table 198. TxDataCon bits

Bit	Symbol	Description
7 to 4	DCodeType	specifies the type of encoding of data to be used 0h - no special coding 1h - collider datastream is decoded 2h - RFU 3h - RFU 4h - return to zero code - pulse at first position 5h - return to zero code - pulse at 2nd position 6h - return to zero code - pulse at 3rd position 7h - return to zero code - pulse at 4th position 8h - 1 out of 4 coding 9h - 1 out of 256 code (range 0 - 255) [ICODE SLI] Ah - 1 out of 256 code (range 0 - 255; 00h is encoded with no modulation, value 256 not used) [ICODE 1] Bh - 1 out of 256 code (range 0 - 255; 00h is encoded with a pulse on last position) [I Code quite value] Ch- Pulse internal encoded (PIE) [ISO/IEC 18000-3 mode 3/ EPC Class-1HF] Dh - RFU Eh - RFU Fh - RFU
3	DSCFreq	Specifies the subcarrier frequency of the used envelope. 0h - 424 kHz 1h - 848 kHz Note: This setting is only relevant if an envelope is used which involves a subcarrier, e.g. Manchester with subcarrier coding.
2 to 0	DBFreq	Specifies the frequency of the bit stream 0h - RFU 1h - RFU 2h - 26 kHz 3h - 53 kHz 4h - 106 kHz 5h - 212 kHz 6h - 424 kHz 7h - 848 kHz

9.16.3 TxDataMOD

Table 199. TxDataMod register (address 4Bh)

Bit	7	6	5	4	3	2	1	0
Symbol	Frame step	DMillerEn	DPulseType		DInvert	DEnvType		
Access rights	r/w	r/w	r/w		r/w	r/w		

All information provided in this document is subject to legal disclaimers.

© NXP B.V. 2012. All rights reserved.

Table 200. TxDataMod bits

Bit	Symbol	Description
7	Framestep	If set to 1, at every start of transmission, each byte of data is sent in a separate frame. SOF and EOF is appended to the data byte according to the framing settings. After one byte is transmitted, the TxEncoder waits for a new start trigger to continue with the next byte (trigger is generated automatically). If set to 0, transmission is done in the used way, where after a start trigger all data bytes are sent and the framing is done for the complete data stream only once.
6	DMillerEn	If set, pulse modulation is applied according to modified miller code. Note: This bit is intended to be set if DPulseType is 1h
5 to 4	DPulseType	Specifies which type of pulse modulation is selected. 0h - no pulse modulation 1h - pulse starts at beginning of bit 2h - pulse starts at beginning of second bit half 3h - pulse starts at beginning of third bit quarter Note: If DMillerEn is set, DPulseType must be set to 1h
3	DInvert	If set the envelope of data is inverted.
2 to 0	DEnvType	Specifies the type of envelope used for transmission of data packets. The selected envelope type is applied to the pseudo bit stream. 0h - Direct output 1h - Manchester code 2h - Manchester code with subcarrier 3h - BPSK 4h - RZ (pulse of half bit length at beginning of second half of bit) 5h - RZ (pulse of half bit length at beginning of bit) 6h - RFU 7h - RFU

9.16.4 TxSymFreq

Table 201. TxSymFreq (address 4Ch)

Bit	7	6	5	4	3	2	1	0
Symbol	S32SCFreq	S32BFreq			S10SCFreq	S10BFreq		
Access rights	r/w	r/w			r/w	r/w		

All information provided in this document is subject to legal disclaimers.

© NXP B.V. 2012. All rights reserved.

Table 202. TxSymFreq bits

Bit	Symbol	Description
7	S32SCFreq	Specifies the frequency of the subcarrier of symbol2 and symbol3 0b ... 424 kHz 1b ... 848 kHz
6 to 4	S32BFreq	Specifies the frequency of the bit stream of symbol2 and symbole3 000b ... RFU 001b ... RFU 010b ... 26 kHz 011b ... 53 kHz 100b ... 106 kHz 101b ... 212 kHz 110b ... 424 kHz 111b ... 848 kHz
3	S10SCFreq	Specifies the frequency of the subcarrier of symbol0 and symbol1 0b ...424 kHz 1b ...848 kHz
2 to 0	S10BFreq	Specifies the frequency of the bit stream of symbol0 and symbol1 000b ... RFU 001b ... RFU 010b ... 26 kHz 011b ... 53 kHz 100b ... 106 kHz 101b ... 212 kHz 110b ... 424 kHz 111b ... 848 kHz

9.16.5 TxSym0

The two Registers TxSym0H and TxSym0L create a 16-bit register that contains the pattern for Symbol0.

Table 203. TxSym0H (address 4Dh)

Bit	7	6	5	4	3	2	1	0
Symbol	Symbol0_H							
Access rights	r/w							

Table 204. TxSYM0H bits

Bit	Symbol	Description
7 to 0	Symbol0H	Higher 8 bits of symbol definition for Symbol0

Table 205. TxSym0L (address 4Eh)

Bit	7	6	5	4	3	2	1	0
Symbol	Symbol0_L							
Access rights	r/w							

Table 206. TxSYM0L bits

Bit	Symbol	Description
7 to 0	Symbol0	Lower 8 bits of symbol definition for Symbol0

All information provided in this document is subject to legal disclaimers.

© NXP B.V. 2012. All rights reserved.

9.16.6 TxSym

The two Registers TxSym1H and TxSym1L create a 16 bit register that contains the pattern for Symbol1.

Table 207. TxSym1H (address 4Fh)

Bit	7	6	5	4	3	2	1	0
Symbol	Symbol1_H							
Access rights	r/w							

Table 208. TxSym1H bits

Bit	Symbol	Description
7 to 0	Symbol1_H	Higher 8 bits of symbol definition for Symbol1

Table 209. TxSym1L (address 50h)

Bit	7	6	5	4	3	2	1	0
Symbol	Symbol1_L							
Access rights	r/w							

Table 210. TxSym1L bits

Bit	Symbol	Description
7 to 0	Symbol1_L	Lower 8 bits of symbol definition for Symbol1

9.16.7 TxSym2

Table 211. TxSYM2 (address 51h)

Bit	7	6	5	4	3	2	1	0
Symbol	Symbol2							
Access rights	r/w							

Table 212. TxSym2 bits

Bit	Symbol	Description
7 to 0	Symbol2	Symbol definition for Symbol2

9.16.8 TxSym3

Table 213. TxSym3 (address 52h)

Bit	7	6	5	4	3	2	1	0
Symbol	Symbol3							
Access rights	r/w							

Table 214. TxSym3 bits

Bit	Symbol	Description
7 to 0	Symbol3	Symbol definition for Symbol3

All information provided in this document is subject to legal disclaimers.

© NXP B.V. 2012. All rights reserved.

9.16.9 TxSym10Len

Table 215. TxSym10Len (address 53h)

Bit	7	6	5	4	3	2	1	0
Symbol	Sym1Len				Sym0Len			
Access rights	r/w				r/w			

Table 216. TxSym10Len bits

Bit	Symbol	Description
7 to 4	Sym1Len	Specifies the number of valid bits of the symbol definition of Symbol1. The range is from 1 bit (0h) to 16 bits (Fh)
3 to 0	Sym0Len	Specifies the number of valid bits of the symbol definition of Symbol0. The range is from 1 bit (0h) to 16 bits (Fh)

9.16.10 TxSym32Len

Table 217. TxSym32Len (address 54h)

Bit	7	6	5	4	3	2	1	0
Symbol	RFU	Sym3Len			RFU	Sym2Len		
Access rights	-	r/w	r/w	r/w	-	r/w	r/w	r/w

Table 218. TxSym32Len bits

Bit	Symbol	Description
7	RFU	-
6 to 4	Sym3Len	Specifies the number of valid bits of the symbol definition of Symbol3. The range is from 1-bit (0h) to 8-bits (7h)
3	RFU	-
2 to 0	Sym2Len	Specifies the number of valid bits of the symbol definition of Symbol2. The range is from 1-bit (0h) to 8-bits (7h)

9.16.11 TxSym10BurstCtrl

Table 219. TxSym10BurstCtrl register (address 55h)

Bit	7	6	5	4	3	2	1	0
Symbol	RFU	Sym1BurstType	Sym1BurstLenOnly	Sym1BurstEn	RFU	Sym0Burst Type	Sym0Burst Only	Sym0Burst En
Access rights	-	r/w	r/w	r/w	-	r/w	r/w	r/w

Table 220. TxSym10BurstCtrl bits

Bit	Symbol	Description
7	RFU	-
6	Sym1Burst Type	Specifies the type of the burst of Symbol1 (logical zero / logical one)
5	Sym1Burst Only	If set to 1 Symbol1 consists only of a burst and no symbol pattern

All information provided in this document is subject to legal disclaimers.

© NXP B.V. 2012. All rights reserved.

Table 220. TxSym10BurstCtrl bits *...continued*

Bit	Symbol	Description
4	Sym1BurstEn	Enables the burst of symbol 1 of the length defined in TxSym10BurstLen
3	RFU	-
2	Sym0BurstType	Specifies the type of the burst of symbol 0 (logical zero / logical one)
1	Sym0BurstOnly	If set to 1, symbol 0 consists only of a burst and no symbol pattern
0	Sym0BurstEn	Enables the burst of symbol 0 of the length defined in TxSym10BurstLen

9.16.12 TxSym10Mod Reg

Table 221. TxSym10Mod register (address 56h)

Bit	7	6	5	4	3	2	1	0
Symbol	RFU	S10MillerEn	S10PulseType		S10Invert	S10EnvType		
Access rights	-	r/w	r/w		r/w	r/w		

Table 222. TxSym10Mod bits

Bit	Symbol	Description
7	RFU	-
6	S10MillerEn	If set, pulse modulation is applied according to modified miller code. Note: This bit shall be set only if S10PulseType is set to 1h
5 to 4	S10PulseType	Specifies which type of pulse modulation is selected. 0h - no pulse modulation 1h - pulse starts at beginning of bit 2h - pulse starts at beginning of second bit half 3h - pulse starts at beginning of third bit quarter
3	S10Inv	If set. the output of Symbol0 and Symbol1 is inverted.
2 to 0	S10EnvType	Specifies the type of envelope used for transmission of symbol 0 and symbol 1. The pseudo bit stream is logically combined with the selected envelope type. 0h - Direct output 1h - Manchester code 2h - Manchester code with subcarrier 3h - BPKSK 4h - RZ return zero, pulse of half bit length at beginning of second half of bit 5h - RZ return zero, pulse of half bit length at beginning of second half of bit 6h - RFU 7h - RFU

All information provided in this document is subject to legal disclaimers.

© NXP B.V. 2012. All rights reserved.

9.16.13 TxSym32Mod

Table 223. TxSym32Mod register (address 57h)

Bit	7	6	5	4	3	2	1	0
Symbol	RFU	S32MillerEn	S32PulseType		S32Invert	S32EnvType		
Access rights	-	r/w	r/w		r/w	r/w		

Table 224. TxSym32Mod bits

Bit	Symbol	Description
7	RFU	-
6	S32MillerEn	If set, pulse modulation is applied according to modified miller code. Note: This bit shall be set only if S32PulseType is set to 1h
5 to 4	S32PulseType	Specifies which type of pulse modulation is selected. 0h - no pulse modulation 1h - pulse starts at beginning of bit 2h - pulse starts at beginning of second bit half 3h - pulse starts at beginning of third bit quarter
3	S32Inv	If set. the output of Symbol2 and Symbol3 is inverted.
2 to 0	S32EnvType	Specifies the type of envelope used for transmission of symbol 0 and symbol 1. The bit stream is logically combined with the selected envelope type. 0h - Direct output 1h - Manchester code 2h - Manchester code with subcarrier 3h - BPSK 4h - RZ return zero, pulse of half bit length at beginning of second half of bit) 5h - RZ return zero, pulse of half bit length at beginning of bit) 6h to 7h RFU

9.17 Receiver configuration

9.17.1 RxBitMod

Table 225. RxBitMod (address 58h)

Bit	7	6	5	4	3	2	1	0
Symbol	RFU	RFU	RxStopOnInvPar	RxStopOnLength	RxMSBFirst	RxStopBitEn	RxParityType	RFU
Access rights	-	-	r/w	r/w	r/w	r/w	r/w	-

All information provided in this document is subject to legal disclaimers.

© NXP B.V. 2012. All rights reserved.

Table 226. RxBitMod bits

Bit	Symbol	Description
7 to 6	RFU	-
5	RxStopOnInvPar	If set to 1, inverse parity bit is a stop condition
4	RxStopOnLength	If set to 1, data reception stops when the number of received bytes reach the defined frame length. The value for the frame length is taken from the first data-byte received.
3	RxMSBFirst	If set to 1, data bytes are interpreted MSB first for data reception, which means data is converted at the CLCoPro interface. If this bit is set to 0, data is interpreted LSB first
2	RxStopBitEn	If set, a stop-bit is expected and will be checked and extracted from data stream. Additionally on detection of a stop-bit a reset signal for the demodulator is generator to enable a re-synchronization of the demodulator. If the expected stop-bit is incorrect, a frame error flag is set and the reception is aborted. Note: A stop bit is always considered to be a logic 1
1	RxParityType	Defines which type of the parity-bit is calculated. If cleared: Even parity If set: Odd parity
0	RFU	-

9.17.2 RxEofSym

Table 227. RxEofSym (address 59h)

Bit	7	6	5	4	3	2	1	0
Symbol	RxEOFSymbol							
Access rights	r/w							

Table 228. RxEOFSym bits

Bit	Symbol	Description
7 to 0	RxEOF Symbol	This value defines the pattern of the EOF symbol with a maximum length of 4 bit. Every tuple of 2 bits of the RxEOFSymbol encodes one bit of the EOF symbol. A 00 tuple closes the symbol. In this way symbols with less than 4 bits can be defined, starting with the bit0 and bit1. The leftmost active symbol pattern is processed first, which means the pattern is expected first. If the bit0 and bit1 are both zero, the EOF symbol is disabled. The following mapping is defined: 0h - no symbol bit 1h - zero value 2h - one value 3h - collision Example: 1Dh: Zero-Collision-Zero E8h: No symbol because two LSBits are zero

All information provided in this document is subject to legal disclaimers.

© NXP B.V. 2012. All rights reserved.

9.17.3 RxSyncValH

Table 229. RxSyncValH register (address5Ah)

Bit	7	6	5	4	3	2	1	0
Symbol	RxSyncValH							
Access rights	r/w							

Table 230. RxSyncValH bits

Bit	Symbol	Description
15 to 0	RxSyncValH	Defines the high byte of the Start Of Frame (SOF) pattern, which must be in front of the receiving data.

9.17.4 RxSyncValL

Table 231. RxSyncValL register (address 5Bh)

Bit	7	6	5	4	3	2	1	0
Symbol	RxSyncValL							
Access rights	r/w							

Table 232. RxSyncValL bits

Bit	Symbol	Description
7 to 0	RxSyncValL	Defines the low byte of the Start Of Frame (SOF) Pattern, which must be in front of the receiving data.

9.17.5 RxSyncMod

Table 233. RxSyncMode register (address 5Ch)

Bit	7	6	5	4	3	2	1	0
Symbol	SyncLen				SyncNegEdge	LastSyncHalf	SyncType	
Access rights	r/w				r/w	r/w	r/w	

Table 234. RxSyncMod bits

Bit	Symbol	Description
7 to 4	SyncLen	Defines how many Bits of registers RxSyncValHi and RxSyncValLo are valid.
3	SyncNegEdge	Is used for SOF with no correlation peak. The first negative edge of the correlation is used for defining the bid grid
2	LastSyncHalf	The last Bit of the Sync mode has only half of the length compared to all other bits. (ISO/IEC 18000-3 mode 3/ EPC Class-1HF)
1 to 0	SyncType	0: all 16 bits of SyncVal are interpreted as burst. 1: a nibble of bits is interpreted as one bit in following way: {data, coll} data = zero or one; coll = 1 means a collision on this bit. Note: if Coll = 1 the value of data is ignored. 2: the synchronisation is done at every start bit of each byte (type B) 3: RFU

All information provided in this document is subject to legal disclaimers.

© NXP B.V. 2012. All rights reserved.

9.17.6 RxMod

Table 235. RxMod register (address 5Dh)

Bit	7	6	5	4	3	2	1	0
Symbol	RFU	RFU	PreFilter	RectFilter	SyncHigh	CorrInv	FSK	BPSK
Access rights	-	-	r/w	r/w	r/w	r/w	r/w	r/w

Table 236. RxMod bits

Bit	Symbol	Description
7 to 6	-	RFU
5	PreFilter	If set 4 samples are combined to one data. (average)
4	RectFilter	If set, the ADC-values are changed to a more rectangular wave shape
3	SyncHigh	Defines if the bit grid is fixed at maximum (1) or at minimum (0) value of the correlation.
2	CorrInv	Defines a logical for Manchester coding: 0: subcarrier / no subcarrier
1	FSK	If set to 1, the demodulation scheme is set to FSK
0	BPSK	If set to 1, the modulation scheme is BPSK

9.17.7 RxCorr

Table 237. RxCorr register (address 5Eh)

Bit	7	6	5	4	3	2	1	0
Symbol	CorrFreq		CorrSpeed		CorrLen	RFU		
Access rights	r/w	r/w	r/w	r/w	r/w	-		

Table 238. RxCorr bits

Bit	Symbol	Description
7, 6	CorrFreq	0h - 212 kHz 1h - 424 kHz 2h - 848 kHz 3h - 848 kHz
5, 4	CorrSpeed	Defines the number of clocks used for one correlation. 0h - ISO/IEC 14443 1h - ICODE 53 kBd, FeliCa 424 kBd 2h - ICODE 26 kBd, FeliCa 212 kBd 3h - RFU
3	CorrLen	Defines the length of the correlation data. (64 or 32 values) If set the lengths of the correlation data is 32 values. (ISO/IEC 18000-3 mode 3/ EPC Class-1HF, 2 Pulse Manchester 848 kHz subcarrier)
2 to 0	RFU	-

All information provided in this document is subject to legal disclaimers.

© NXP B.V. 2012. All rights reserved.

9.17.8 FabCali

Table 239. FabCali register (address 5Fh)

Bit	7	6	5	4	3	2	1	0
Symbol	FabCali							
Access rights	r/w							

Table 240. FabCali bits

Bit	Symbol	Description
7 to 0	FabCali	Fabrication calibration of the receiver NOTE: do not change boot value

9.18 Version register

9.18.1 Version

Table 241. Version register (address 7Fh)

Bit	7	6	5	4	3	2	1	0
Symbol	Version				SubVersion			
Access rights	r				r			

Table 242. Version bits

Bit	Symbol	Description
7 to 4	Version	Includes the version of the CLRC663 silicon
3 to 0	SubVersion	Includes the subversion of the CLRC663 silicon

All information provided in this document is subject to legal disclaimers.

© NXP B.V. 2012. All rights reserved.

10. Limiting values

Table 243. Limiting values

In accordance with the Absolute Maximum Rating System (IEC 60134).

Symbol	Parameter	Conditions	Min	Max	Unit
V_{DD}	supply voltage		-0.5	+5.5	V
$V_{DD(PVDD)}$	PVDD supply voltage		–0.5	+5.5	V
$V_{DD(TVDD)}$	TVDD supply voltage		–0.5	+5.5	V
$V_{i(RXP)}$	input voltage on pin RXP		-0.5	+2.0	V
$V_{i(RXN)}$	input voltage on pin RXN		-0.5	+2.0	V
P_{tot}	total power dissipation	per package	-	1125	mW
V_{ESD}	electrostatic discharge voltage	Human Body Model (HBM); 1500 Ω, 100 pF; JESD22-A114-B	-	2000	V
$T_{j(max)}$	maximum junction temperature		-	150	°C

11. Recommended operating conditions

Table 244. Operating conditions

Symbol	Parameter	Conditions		Min	Typ	Max	Unit
V_{DD}	supply voltage			3	5	5.5	V
$V_{DD(TVDD)}$	TVDD supply voltage		[1]	3	5	5.5	V
$V_{DD(PVDD)}$	PVDD supply voltage			3	5	5.5	V
T_{amb}	ambient temperature			–25	-	+85	°C

[1] $V_{DD(PVDD)}$ must always be the same or lower than V_{DD}.

12. Thermal characteristics

Table 245. Thermal characteristics

Symbol	Parameter	Conditions	Package	Typ	Unit
$R_{th(j-a)}$	thermal resistance from junction to ambient	in still air with exposed pin soldered on a 4 layer JEDEC PCB	HVQFN32	40	K/W

13. Characteristics

Table 246. Characteristics

Symbol	Parameter	Conditions	Min	Typ	Max	Unit
Input characteristics I/O Pin Characteristics IF3-SDA in I²C configuration						
I_{LI}	input leakage current	output disabled	-	2	100	nA
V_{IL}	LOW-level input voltage		–0.5	-	$+0.3V_{DD(PVDD)}$	V
V_{IH}	HIGH-level input voltage		$0.7V_{DD(PVDD)}$	-	$V_{DD(PVDD)} + 0.5$	V
V_{OL}	LOW-level output voltage	I_{OL} = 3 mA	-	-	0.3	V

All information provided in this document is subject to legal disclaimers.

© NXP B.V. 2012. All rights reserved.

Table 246. Characteristics *...continued*

Symbol	Parameter	Conditions		Min	Typ	Max	Unit
I_{OL}	LOW-level output current	V_{OL} = 0.4 V; Standard mode, Fast mode		4	-	-	mA
		V_{OL} = 0.6 V; Standard mode, Fast mode		6	-	-	mA
$t_{f(o)}$	output fall time	Standard mode, Fast mode, C_L < 400 pF		-	-	250	ns
		Fast mode +; C_L < 550 pF		-	-	120	ns
t_{SP}	pulse width of spikes that must be suppressed by the input filter			0	-	50	ns
C_i	input capacitance			-	3.5	5	pF
C_L	load capacitance	Standard mode		-	-	400	pF
		Fast mode		-	-	550	pF
Analog and digital supply AVDD,DVDD							
V_{DDA}	analog supply voltage			-	1.8	-	V
V_{DDD}	digital supply voltage			-	1.8	-	V
C_L	load capacitance	AVDD		220	470	-	nF
C_L	load capacitance	DVDD		220	470	-	nF
Current consumption							
I_{pd}	power-down current	PDOWN pin pulled HIGH	[1]	-	8	40	nA
I_{stb}	standby current	Standby bit = 1		-	3	6	μA
I_{DD}	supply current	modem on		-	17	20	mA
		modem off		-	0.45	0.5	mA
$I_{DD(TVDD)}$	TVDD supply current			-	100	200	mA
I/O pin characteristics SIGIN, SIGOUT, CLKOUT, IFSEL0, IFSEL1, TCK, TMS, TDI, TDO, IRQ, IF0, IF1, IF2, SCL2, SDA2							
I_{LI}	input leakage current	output disabled		-	50	500	nA
V_{IL}	LOW-level input voltage			–0.5	-	$0.3V_{DD(PVDD)}$	V
V_{IH}	HIGH-level input voltage			$0.7V_{DD(PVDD)}$	-	$V_{DD(PVDD)}$ + 0.5	V
V_{OL}	LOW-level output voltage	I_{OL} = 4 mA, $V_{DD(PVDD)}$ = 5.0 V		-	-	0.4	V
		I_{OL} = 4 mA, $V_{DD(PVDD)}$ = 3.3 V		-	-	0.4	V
V_{OH}	HIGH-level output voltage	I_{OL} = 4 mA, $V_{DD(PVDD)}$ = 5.0 V		4.6	-	-	V
		I_{OL} = 4 mA, $V_{DD(PVDD)}$ = 3.3 V		2.9	-	-	V
C_i	input capacitance			-	2.5	4.5	pF
Pull-up resistance for TCK, TMS, TDI, IF2							
R_{pu}	pull-up resistance			50	72	120	KΩ
Pin characteristics AUX 1, AUX 2							
V_o	output voltage			0	-	1.8	V
C_L	load capacitance			-	-	400	pF
Pin characteristics RXP, RXN							
V_i	input voltage			0	-	1.8	V
C_i	input capacitance			2	3.5	5	pF

All information provided in this document is subject to legal disclaimers.

© NXP B.V. 2012. All rights reserved.

Table 246. Characteristics *...continued*

Symbol	Parameter	Conditions		Min	Typ	Max	Unit
$V_{mod(pp)}$	modulation voltage	$V_{mod(pp)} = V_{i(pp)(max)} - V_{i(pp)(min)}$		-	2.5	-	mV
V_{pp}	signal on RXP, RXN			-	-	1.65	V
Pins TX1 and TX2							
V_o	output voltage			$V_{ss(TVSS)}$	-	$V_{DD(TVDD)}$	V
R_o	output resistance			-	1.5	-	W
Current consumption							
I_{pd}	power-down current	power-down		-	8	200	nA
		standby current	[1]	-	3	6	μA
I_{LPCD}	LPCD sleep current		[1]	-	3	6	μA
I_{DD}	supply current			-	17	20	mA
		modem off; transceiver off		-	0.45	0.5	mA
$I_{DD(PVDD)}$	PVDD supply current	no load on digital pin	[2]	-	-	10	μA
$I_{DD(TVDD)}$	TVDD supply current		[3][4][5]	-	100	200	mA
Clock frequency Pin CLKOUT							
f_{clk}	clock frequency			-	27.12	-	MHz
δ_{clk}	clock duty cycle			-	50	-	%
Crystal oscillator							
$V_{o(p-p)}$	peak-to-peak output voltage	pin XTAL1		-	1	-	V
V_i	input voltage	pin XTAL1		0	-	1.8	V
C_i	input capacitance	pin XTAL1		-	3	-	pF
Typical input requirements							
f_{xtal}	crystal frequency			-	27.12	-	MHz
ESR	equivalent series resistance			-	50	100	Ω
C_L	load capacitance			-	10	-	pF
P_{xtal}	crystal power dissipation			-	50	100	μW

[1] I_{pd} is the total current for all supplies.

[2] $I_{DD(PVDD)}$ depends on the overall load at the digital pins.

[3] $I_{DD(TVDD)}$ depends on $V_{DD(TVDD)}$ and the external circuit connected to pins TX1 and TX2.

[4] During typical circuit operation, the overall current is below 100 mA.

[5] Typical value using a complementary driver configuration and an antenna matched to 40 Ω between pins TX1 and TX2 at 13.56 MHz.

All information provided in this document is subject to legal disclaimers.

© NXP B.V. 2012. All rights reserved.

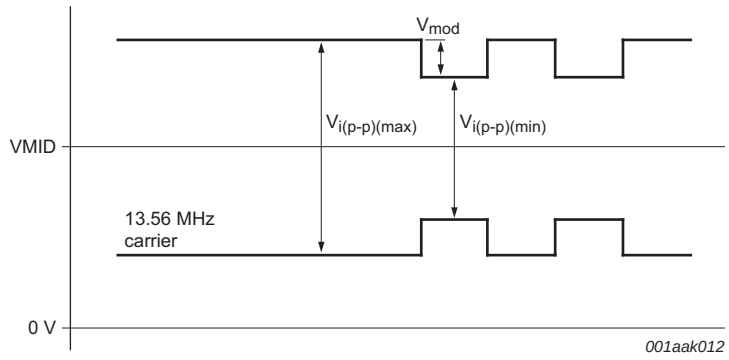

Fig 34. Pin RX input voltage

13.1 Timing characteristics

Table 247. SPI timing characteristics

Symbol	Parameter	Conditions	Min	Typ	Max	Unit
t_{SCKL}	SCK LOW time		50	-	-	ns
t_{SCKH}	SCK HIGH time		50	-	-	ns
$t_{h(SCKH-D)}$	SCK HIGH to data input hold time	SCK to changing MOSI	25	-	-	ns
$t_{su(D-SCKH)}$	data input to SCK HIGH set-up time	changing MOSI to SCK	25	-	-	ns
$t_{h(SCKL-Q)}$	SCK LOW to data output hold time	SCK to changing MISO	-	-	25	ns
$t_{(SCKL-NSSH)}$	SCK LOW to NSS HIGH time		0	-	-	ns
t_{NSSH}	NSS HIGH time	before communication	50	-	-	ns

Remark: To send more bytes in one data stream the NSS signal must be LOW during the send process. To send more than one data stream the NSS signal must be HIGH between each data stream.

Table 248. I²C-bus timing in fast mode and fast mode plus

Symbol	Parameter	Conditions	Fast mode		Fast mode Plus		Unit
			Min	Max	Min	Max	
f_{SCL}	SCL clock frequency		0	400	0	1000	kHz
$t_{HD;STA}$	hold time (repeated) START condition	after this period, the first clock pulse is generated	600	-	260	-	ns
$t_{SU;STA}$	set-up time for a repeated START condition		600	-	260	-	ns
$t_{SU;STO}$	set-up time for STOP condition		600	-	260	-	ns
t_{LOW}	LOW period of the SCL clock		1300	-	500	-	ns
t_{HIGH}	HIGH period of the SCL clock		600	-	260	-	ns
$t_{HD;DAT}$	data hold time		0	900	-	450	ns

All information provided in this document is subject to legal disclaimers.

© NXP B.V. 2012. All rights reserved.

Table 248. I²C-bus timing in fast mode and fast mode plus *...continued*

Symbol	Parameter	Conditions	Fast mode		Fast mode Plus		Unit
			Min	Max	Min	Max	
$t_{SU;DAT}$	data set-up time		100	-	-	-	ns
t_r	rise time	SCL signal	20	300	-	120	ns
t_f	fall time	SCL signal	20	300	-	120	ns
t_r	rise time	SDA and SCL signals	20	300	-	120	ns
t_f	fall time	SDA and SCL signals	20	300	-	120	ns
t_{BUF}	bus free time between a STOP and START condition		1.3	-	0.5	-	µs

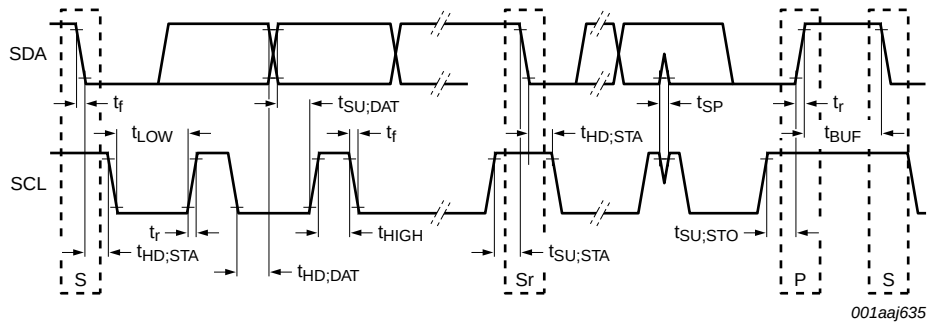

Fig 35. Timing for fast and standard mode devices on the I²C-bus

All information provided in this document is subject to legal disclaimers.

© NXP B.V. 2012. All rights reserved.

14. Application information

A typical application diagram using a complementary antenna connection to the CLRC663 is shown in Figure 36.

The antenna tuning and RF part matching is described in the application note Ref. 1 and Ref. 2.

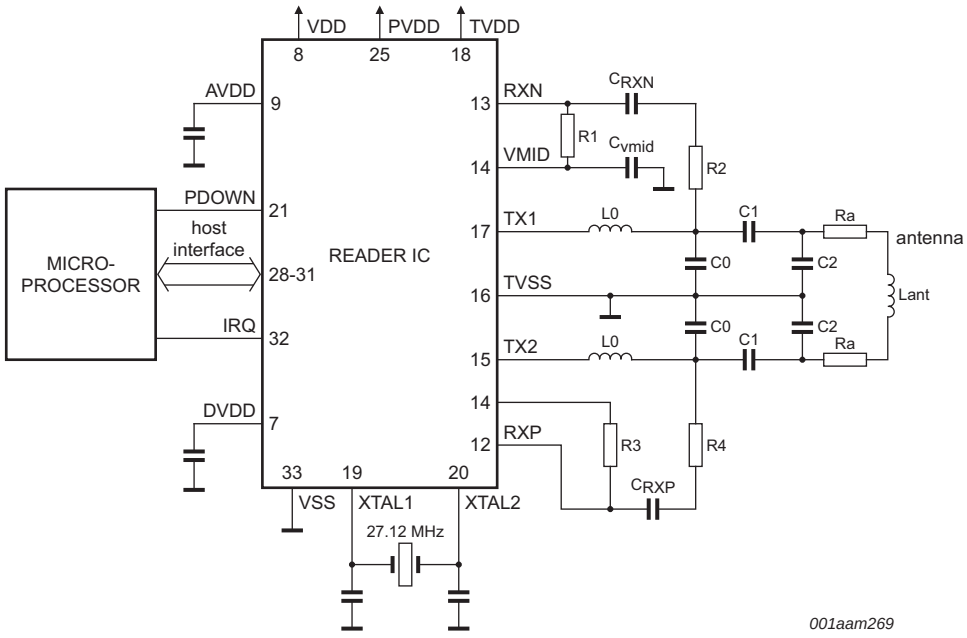

Fig 36. Typical application antenna circuit diagram

14.1 Antenna design description

The matching circuit for the antenna consists of an EMC low pass filter (L0 and C0), a matching circuitry (C1 and C2), and a receiving circuits (R1 = R3, R2 = R4, C3 = C5 and C4 = C6;), and the antenna itself. The receiving circuit component values needs to be designed for operation with the CLRC663. A reuse of dedicated antenna designs done for other products without adaptation of component values will result in degraded performance.

For a more detailed information about designing and tuning the antenna please refer to the relevant application notes:

- MICORE reader IC family; Directly Matched Antenna Design, Ref. 1 and
- MIFARE (14443A) 13.56 MHz RFID Proximity Antennas, Ref. 2.

14.1.1 EMC low pass filter

The MIFARE system operates at a frequency of 13.56 MHz. This frequency is generated by a quartz oscillator to clock the CLRC663 and is also the basis for driving the antenna with the 13.56 MHz energy carrier. This will not only cause emitted power at 13.56 MHz

All information provided in this document is subject to legal disclaimers.

© NXP B.V. 2012. All rights reserved.

but will also emit power at higher harmonics. The international EMC regulations define the amplitude of the emitted power in a broad frequency range. Thus, an appropriate filtering of the output signal is necessary to fulfil these regulations.

Remark: The layout has a major influence on the overall performance of the filter.

14.1.2 Antenna matching

Due to the impedance transformation of the given low pass filter, the antenna coil has to be matched to a certain impedance. The matching elements C1 and C2 can be estimated and have to be fine tuned depending on the design of the antenna coil.

The correct impedance matching is important to provide the optimum performance. The overall quality factor has to be considered to guarantee a proper ISO/IEC 14443 communication scheme. Environmental influences have to be considered as well as common EMC design rules.

For details refer to the NXP application notes.

14.1.3 Receiving circuit

The internal receiving concept of the CLRC663 makes use both side-bands of the sub-carrier load modulation of the card response via a differential receiving concept (RXP, RXN). No external filtering is required.

It is recommended to use the internally generated VMID potential as the input potential of pin RX. This DC voltage level of VMID has to be coupled to the Rx-pins via R2 and R4. To provide a stable DC reference voltage capacitances C4, C6 has to be connected between VMID and ground. Refer to Figure 36

Considering the (AC) voltage limits at the Rx-pins the AC voltage divider of R1 + C3 and R2 as well as R3 + C5 and R4 has to be designed. Depending on the antenna coil design and the impedance matching the voltage at the antenna coil varies from antenna design to antenna design. Therefore the recommended way to design the receiving circuit is to use the given values for R1(= R3), R2 (= R4), and C3 (= C5) from the above mentioned application note, and adjust the voltage at the RX-pins by varying R1(= R3) within the given limits.

Remark: R2 and R4 are AC-wise connected to ground (via C4 and C6).

All information provided in this document is subject to legal disclaimers.

© NXP B.V. 2012. All rights reserved.

14.1.4 Antenna coil

The precise calculation of the antenna coils' inductance is not practicable but the inductance can be **estimated** using the following formula. We recommend designing an antenna either with a circular or rectangular shape.

$$L_1 = 2 \cdot I_1 \cdot \left(ln \langle \frac{I_1}{D_1} \rangle - K \right) N_1^{1,8} \quad (4)$$

- I_1 - Length in cm of one turn of the conductor loop
- D_1 - Diameter of the wire or width of the PCB conductor respectively
- K - Antenna shape factor (K = 1,07 for circular antennas and K = 1,47 for square antennas)
- L_1 - Inductance in nH
- N_1 - Number of turns
- Ln: Natural logarithm function

The actual values of the **antenna inductance, resistance, and capacitance at 13.56 MHz** depend on various parameters such as:

- antenna construction (Type of PCB)
- thickness of conductor
- distance between the windings
- shielding layer
- metal or ferrite in the near environment

Therefore a measurement of those parameters under real life conditions, or at least a rough measurement and a tuning procedure is highly recommended to guarantee a reasonable performance. For details refer to the above mentioned application notes.

All information provided in this document is subject to legal disclaimers.

© NXP B.V. 2012. All rights reserved.

15. Package outline

HVQFN32: plastic thermal enhanced very thin quad flat package; no leads; 32 terminals; body 5 x 5 x 0.85 mm **SOT617-1**

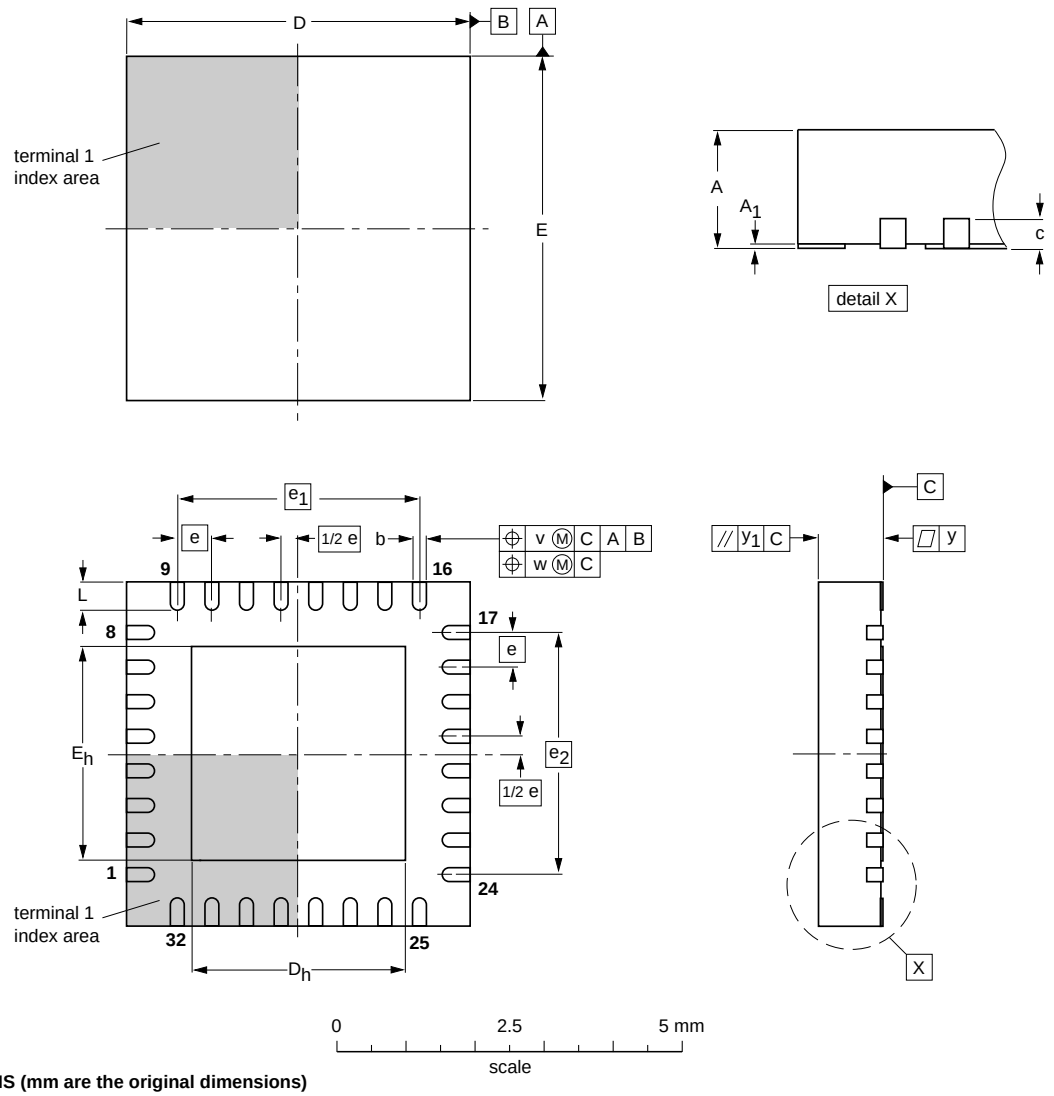

DIMENSIONS (mm are the original dimensions)

UNIT	A(1) max.	A_1	b	c	D(1)	D_h	E(1)	E_h	e	e_1	e_2	L	v	w	y	y_1
mm	1	0.05 0.00	0.30 0.18	0.2	5.1 4.9	3.25 2.95	5.1 4.9	3.25 2.95	0.5	3.5	3.5	0.5 0.3	0.1	0.05	0.05	0.1

Note

1. Plastic or metal protrusions of 0.075 mm maximum per side are not included.

OUTLINE VERSION	REFERENCES				EUROPEAN PROJECTION	ISSUE DATE
	IEC	JEDEC	JEITA			
SOT617-1	- - -	MO-220	- - -			~~01-08-08~~ 02-10-18

Fig 37. Package outline SOT617-1 (HVQFN32)

All information provided in this document is subject to legal disclaimers.

© NXP B.V. 2012. All rights reserved.

Detailed package information can be found at
http://www.nxp.com/package/SOT617-1.html.

16. Handling information

Moisture Sensitivity Level (MSL) evaluation has been performed according to *SNW-FQ-225B rev.04/07/07 (JEDEC J-STD-020C)*. MSL for this package is level 2 which means 260 °C convection reflow temperature.

Dry pack is required.

1 year out-of-pack floor life at maximum ambient temperature 30 °C/ 85 % RH.

17. Packing information

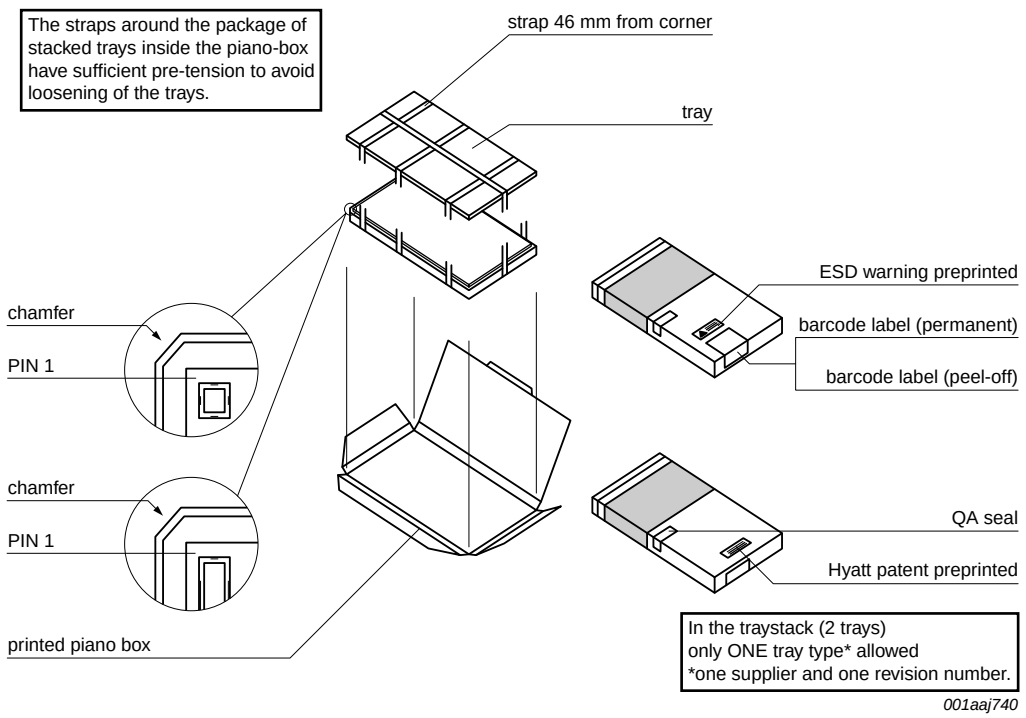

Fig 38. Packing information 1 tray

All information provided in this document is subject to legal disclaimers.

© NXP B.V. 2012. All rights reserved.

18. Abbreviations

Table 249. Abbreviations

Acronym	Description
ADC	Analog-to-Digital Converter
BPSK	Binary Phase Shift Keying
CRC	Cyclic Redundancy Check
CW	Continuous Wave
EGT	Extra Guard Time
EMC	Electro Magnetic Compatibility
EMD	Electro Magnetic Disturbance
EOF	End Of Frame
EPC	Electronic Product Code
ETU	Elementary Time Unit
GPIO	General Purpose Input/Output
HBM	Human Body Model
I^2C	Inter-Integrated Circuit
LFO	Low Frequency Oscillator
LPCD	Low-Power Card Detection
LSB	Least Significant Bit
MISO	Master In Slave Out
MOSI	Master Out Slave In
MSB	Most Significant Bit
NRZ	Not Return to Zero
NSS	Not Slave Select
PCD	Proximity Coupling Device
PLL	Phase-Locked Loop
RZ	Return To Zero
RX	Receiver
SAM	Secure Access Module
SOF	Start Of Frame
SPI	Serial Peripheral Interface
SW	Software
TTimer	Timing of the clk period
TX	Transmitter
UART	Universal Asynchronous Receiver Transmitter
UID	Unique IDentification
VCO	Voltage Controlled Oscillator

All information provided in this document is subject to legal disclaimers.

© NXP B.V. 2012. All rights reserved.

19. References

[1] **Application note** — *MFRC52x Reader IC Family Directly Matched Antenna Design*

[2] **Application note** — *MIFARE (ISO/IEC 14443 A) 13.56 MHz RFID Proximity Antennas*

[3] **BSDL File** — *Boundary scan description language file of the CLRC663*

All information provided in this document is subject to legal disclaimers.

© NXP B.V. 2012. All rights reserved.

20. Revision history

Table 250. Revision history

Document ID	Release date	Data sheet status	Change notice	Supersedes
CLRC663 v.3.4	20120717	Product data sheet		CLRC663 v.3.3
Modifications:	• Section 21.4 “Licenses”: updated			
CLRC663 v.3.3	20120402	Product data sheet	-	CLRC663 v.3.2
Modifications:	• Description of SAM support added • General update			
CLRC663 v.3.2	20120403	Product data sheet	-	CLRC663 v.3.1
Modifications:	• General update • Specification status changed into “Product data sheet”			
CLRC663 v.3.1	20110926	Preliminary data sheet	-	CLRC663 v.3.0
Modifications:	• Specification status reversed from “Product data sheet” into “Preliminary data sheet”			
CLRC663 v.3.0	20110919	Product data sheet	-	CLRC663 v.2.0
Modifications:	• Section 5 “Ordering information”: updated • Section 8 “Functional description”. Section 9 “CLRC663 registers”: updated • Section 8.7.2.1 “Product information and configuration - Page 0”: updated • Section 8.10.2 “Command set overview”: updated • Table 18 “Command overview”, Table 57 “FIFOData register (address 05h);”Table 156 “RxCtrl bits”: updated • Table 246 “Characteristics”: updated			
CLRC663 v.2.0	20110615	Preliminary data sheet	-	CLRC663 v.1.0
Modifications:	• General update			
CLRC663 v.1.0	20110308	Objective data sheet	-	-

All information provided in this document is subject to legal disclaimers.

© NXP B.V. 2012. All rights reserved.

21. Legal information

21.1 Data sheet status

Document status[1][2]	Product status[3]	Definition
Objective [short] data sheet	Development	This document contains data from the objective specification for product development.
Preliminary [short] data sheet	Qualification	This document contains data from the preliminary specification.
Product [short] data sheet	Production	This document contains the product specification.

[1] Please consult the most recently issued document before initiating or completing a design.

[2] The term 'short data sheet' is explained in section "Definitions".

[3] The product status of device(s) described in this document may have changed since this document was published and may differ in case of multiple devices. The latest product status information is available on the Internet at URL http://www.nxp.com.

21.2 Definitions

Draft — The document is a draft version only. The content is still under internal review and subject to formal approval, which may result in modifications or additions. NXP Semiconductors does not give any representations or warranties as to the accuracy or completeness of information included herein and shall have no liability for the consequences of use of such information.

Short data sheet — A short data sheet is an extract from a full data sheet with the same product type number(s) and title. A short data sheet is intended for quick reference only and should not be relied upon to contain detailed and full information. For detailed and full information see the relevant full data sheet, which is available on request via the local NXP Semiconductors sales office. In case of any inconsistency or conflict with the short data sheet, the full data sheet shall prevail.

Product specification — The information and data provided in a Product data sheet shall define the specification of the product as agreed between NXP Semiconductors and its customer, unless NXP Semiconductors and customer have explicitly agreed otherwise in writing. In no event however, shall an agreement be valid in which the NXP Semiconductors product is deemed to offer functions and qualities beyond those described in the Product data sheet.

21.3 Disclaimers

Limited warranty and liability — Information in this document is believed to be accurate and reliable. However, NXP Semiconductors does not give any representations or warranties, expressed or implied, as to the accuracy or completeness of such information and shall have no liability for the consequences of use of such information. NXP Semiconductors takes no responsibility for the content in this document if provided by an information source outside of NXP Semiconductors.

In no event shall NXP Semiconductors be liable for any indirect, incidental, punitive, special or consequential damages (including - without limitation - lost profits, lost savings, business interruption, costs related to the removal or replacement of any products or rework charges) whether or not such damages are based on tort (including negligence), warranty, breach of contract or any other legal theory.

Notwithstanding any damages that customer might incur for any reason whatsoever, NXP Semiconductors' aggregate and cumulative liability towards customer for the products described herein shall be limited in accordance with the *Terms and conditions of commercial sale* of NXP Semiconductors.

Right to make changes — NXP Semiconductors reserves the right to make changes to information published in this document, including without limitation specifications and product descriptions, at any time and without notice. This document supersedes and replaces all information supplied prior to the publication hereof.

Suitability for use — NXP Semiconductors products are not designed, authorized or warranted to be suitable for use in life support, life-critical or safety-critical systems or equipment, nor in applications where failure or malfunction of an NXP Semiconductors product can reasonably be expected to result in personal injury, death or severe property or environmental damage. NXP Semiconductors and its suppliers accept no liability for inclusion and/or use of NXP Semiconductors products in such equipment or applications and therefore such inclusion and/or use is at the customer's own risk.

Applications — Applications that are described herein for any of these products are for illustrative purposes only. NXP Semiconductors makes no representation or warranty that such applications will be suitable for the specified use without further testing or modification.

Customers are responsible for the design and operation of their applications and products using NXP Semiconductors products, and NXP Semiconductors accepts no liability for any assistance with applications or customer product design. It is customer's sole responsibility to determine whether the NXP Semiconductors product is suitable and fit for the customer's applications and products planned, as well as for the planned application and use of customer's third party customer(s). Customers should provide appropriate design and operating safeguards to minimize the risks associated with their applications and products.

NXP Semiconductors does not accept any liability related to any default, damage, costs or problem which is based on any weakness or default in the customer's applications or products, or the application or use by customer's third party customer(s). Customer is responsible for doing all necessary testing for the customer's applications and products using NXP Semiconductors products in order to avoid a default of the applications and the products or of the application or use by customer's third party customer(s). NXP does not accept any liability in this respect.

Limiting values — Stress above one or more limiting values (as defined in the Absolute Maximum Ratings System of IEC 60134) will cause permanent damage to the device. Limiting values are stress ratings only and (proper) operation of the device at these or any other conditions above those given in the Recommended operating conditions section (if present) or the Characteristics sections of this document is not warranted. Constant or repeated exposure to limiting values will permanently and irreversibly affect the quality and reliability of the device.

Terms and conditions of commercial sale — NXP Semiconductors products are sold subject to the general terms and conditions of commercial sale, as published at http://www.nxp.com/profile/terms, unless otherwise agreed in a valid written individual agreement. In case an individual agreement is concluded only the terms and conditions of the respective agreement shall apply. NXP Semiconductors hereby expressly objects to applying the customer's general terms and conditions with regard to the purchase of NXP Semiconductors products by customer.

No offer to sell or license — Nothing in this document may be interpreted or construed as an offer to sell products that is open for acceptance or the grant, conveyance or implication of any license under any copyrights, patents or other industrial or intellectual property rights.

All information provided in this document is subject to legal disclaimers.

© NXP B.V. 2012. All rights reserved.

Export control — This document as well as the item(s) described herein may be subject to export control regulations. Export might require a prior authorization from competent authorities.

Quick reference data — The Quick reference data is an extract of the product data given in the Limiting values and Characteristics sections of this document, and as such is not complete, exhaustive or legally binding.

Non-automotive qualified products — Unless this data sheet expressly states that this specific NXP Semiconductors product is automotive qualified, the product is not suitable for automotive use. It is neither qualified nor tested in accordance with automotive testing or application requirements. NXP Semiconductors accepts no liability for inclusion and/or use of non-automotive qualified products in automotive equipment or applications.

In the event that customer uses the product for design-in and use in automotive applications to automotive specifications and standards, customer (a) shall use the product without NXP Semiconductors' warranty of the product for such automotive applications, use and specifications, and (b) whenever customer uses the product for automotive applications beyond NXP Semiconductors' specifications such use shall be solely at customer's own risk, and (c) customer fully indemnifies NXP Semiconductors for any liability, damages or failed product claims resulting from customer design and use of the product for automotive applications beyond NXP Semiconductors' standard warranty and NXP Semiconductors' product specifications.

Translations — A non-English (translated) version of a document is for reference only. The English version shall prevail in case of any discrepancy between the translated and English versions.

21.4 Licenses

Purchase of NXP ICs with ISO/IEC 14443 type B functionality	
RATP/Innovatron Technology	This NXP Semiconductors IC is ISO/IEC 14443 Type B software enabled and is licensed under Innovatron's Contactless Card patents license for ISO/IEC 14443 B. The license includes the right to use the IC in systems and/or end-user equipment.

Purchase of NXP ICs with NFC technology
Purchase of an NXP Semiconductors IC that complies with one of the Near Field Communication (NFC) standards ISO/IEC 18092 and ISO/IEC 21481 does not convey an implied license under any patent right infringed by implementation of any of those standards.

21.5 Trademarks

Notice: All referenced brands, product names, service names and trademarks are the property of their respective owners.

I²C-bus — logo is a trademark of NXP B.V.

MIFARE — is a trademark of NXP B.V.

MIFARE Ultralight — is a trademark of NXP B.V.

DESFire — is a trademark of NXP B.V.

MIFARE Plus — is a trademark of NXP B.V.

ICODE and I-CODE — are trademarks of NXP B.V.

22. Contact information

For more information, please visit: **http://www.nxp.com**

For sales office addresses, please send an email to: **salesaddresses@nxp.com**

All information provided in this document is subject to legal disclaimers.

© NXP B.V. 2012. All rights reserved.

23. Contents

1 Introduction . . . 1
2 General description . . . 1
3 Features and benefits . . . 2
4 Quick reference data . . . 3
5 Ordering information . . . 3
6 Block diagram . . . 4
7 Pinning information . . . 4
7.1 Pin description . . . 5
8 Functional description . . . 6
8.1 Interrupt controller . . . 7
8.2 Timer module . . . 9
8.2.1 Timer modes . . . 10
8.2.1.1 Time-Out- and Watch-Dog-Counter . . . 10
8.2.1.2 Wake-up timer . . . 10
8.2.1.3 Stop watch . . . 10
8.2.1.4 Programmable one-shot timer . . . 10
8.2.1.5 Periodical trigger . . . 10
8.3 Contactless interface unit . . . 11
8.3.1 ISO/IEC14443A/MIFARE functionality . . . 11
8.3.2 ISO/IEC14443B functionality . . . 13
8.3.3 FeliCa functionality . . . 14
8.3.3.1 FeliCa framing and coding . . . 14
8.3.4 ISO/IEC15693 functionality . . . 14
8.3.5 EPC-UID/UID-OTP functionality . . . 16
8.3.6 ISO/IEC 18000-3 mode 3/ EPC Class-1 HF functionality . . . 16
8.3.7 ISO/IEC 18092 mode . . . 16
8.3.7.1 Passive communication mode . . . 17
8.3.7.2 ISO/IEC 18092 framing and coding . . . 18
8.3.7.3 ISO/IEC 18092 protocol support . . . 18
8.3.8 EPC Class-1 HF and ICODE . . . 18
8.3.8.1 Data encoding ICODE . . . 18
8.4 Host interfaces . . . 18
8.4.1 Host interface configuration . . . 18
8.4.2 SPI interface . . . 19
8.4.2.1 General . . . 19
8.4.2.2 Read data . . . 19
8.4.2.3 Write data . . . 20
8.4.2.4 Address byte . . . 20
8.4.2.5 Timing Specification SPI . . . 20
8.4.3 RS232 interface . . . 21
8.4.3.1 Selection of the transfer speeds . . . 21
8.4.3.2 Framing . . . 22
8.4.4 I^2C-bus interface . . . 24
8.4.4.1 General . . . 24
8.4.4.2 I^2C Data validity . . . 24
8.4.4.3 I^2C START and STOP conditions . . . 25
8.4.4.4 I^2C byte format . . . 25
8.4.4.5 I^2C Acknowledge . . . 26
8.4.4.6 I^2C 7-bit addressing . . . 26
8.4.4.7 I^2C-register write access . . . 27
8.4.4.8 I^2C-register read access . . . 27
8.4.4.9 I^2CL-bus interface . . . 28
8.4.5 SAM interface I^2C . . . 29
8.4.5.1 SAM functionality . . . 29
8.4.5.2 SAM connection . . . 30
8.4.6 Boundary scan interface . . . 30
8.4.6.1 Interface signals . . . 31
8.4.6.2 Test Clock (TCK) . . . 31
8.4.6.3 Test Mode Select (TMS) . . . 31
8.4.6.4 Test Data Input (TDI) . . . 31
8.4.6.5 Test Data Output (TDO) . . . 31
8.4.6.6 Data register . . . 32
8.4.6.7 Boundary scan cell . . . 32
8.4.6.8 Boundary scan path . . . 32
8.4.6.9 Boundary Scan Description Language (BSDL) . . . 33
8.4.6.10 Non-IEEE1149.1 commands . . . 34
8.5 Buffer . . . 35
8.5.1 Overview . . . 35
8.5.2 Accessing the FIFO buffer . . . 35
8.5.3 Controlling the FIFO buffer . . . 35
8.5.4 Status Information about the FIFO buffer . . . 35
8.6 Analog interface and contactless UART . . . 37
8.6.1 General . . . 37
8.6.2 TX transmitter . . . 37
8.6.2.1 Overshoot protection . . . 39
8.6.2.2 Bit generator . . . 40
8.6.3 Receiver circuitry . . . 40
8.6.3.1 General . . . 40
8.6.3.2 Block diagram . . . 41
8.6.4 Active antenna concept . . . 42
8.6.5 Symbol generator . . . 45
8.7 Memory . . . 45
8.7.1 Memory overview . . . 45
8.7.2 EEPROM memory organization . . . 46
8.7.2.1 Product information and configuration - Page 0 . . . 47
8.7.3 EEPROM initialization content LoadProtocol . . . 48
8.8 Clock generation . . . 50
8.8.1 Crystal oscillator . . . 50
8.8.2 IntegerN PLL clock line . . . 50
8.8.3 Low-Power Oscillator (LPO) . . . 51
8.9 Power management . . . 52
8.9.1 Supply concept . . . 52

continued >>

All information provided in this document is subject to legal disclaimers.

© NXP B.V. 2012. All rights reserved.

8.9.2 Power reduction mode 52
8.9.2.1 Power-down 52
8.9.2.2 Standby mode. 52
8.9.2.3 Modem off mode. 52
8.9.3 Low-Power Card Detection (LPCD) 53
8.9.4 Reset and start-up time 53
8.10 Command set 54
8.10.1 General. 54
8.10.2 Command set overview 54
8.10.3 Command functionality 55
8.10.3.1 Idle command 55
8.10.3.2 LPCD command 55
8.10.3.3 Load key command 55
8.10.3.4 MFAuthent command 55
8.10.3.5 AckReq command 56
8.10.3.6 Receive command 56
8.10.3.7 Transmit command 57
8.10.3.8 Transceive command 57
8.10.3.9 WriteE2 command 57
8.10.3.10 WriteE2PAGE command 57
8.10.3.11 ReadE2 command 57
8.10.3.12 LoadReg command 57
8.10.3.13 LoadProtocol command 58
8.10.3.14 LoadKeyE2 command 58
8.10.3.15 StoreKeyE2 command 59
8.10.3.16 GetRNR command 59
8.10.3.17 SoftReset command 59
9 CLRC663 registers. 60
9.1 Register bit behavior. 60
9.2 Command configuration 63
9.2.1 Command 63
9.3 SAM configuration register 63
9.3.1 HostCtrl. 63
9.4 FIFO configuration register 64
9.4.1 FIFOControl 64
9.4.2 WaterLevel 64
9.4.3 FIFOLength 66
9.4.4 FIFOData 66
9.5 Interrupt configuration registers 66
9.5.1 IRQ0 register 67
9.5.2 IRQ1 register 67
9.5.3 IRQ0En register 68
9.5.4 IRQ1En 68
9.6 Contactless interface configuration registers . 69
9.6.1 Error 69
9.6.2 Status 70
9.6.3 RxBitCtrl 71
9.6.4 RxColl 73
9.7 Timer configuration registers 74
9.7.1 TControl 74
9.7.2 T0Control 74
9.7.2.1 T0ReloadHi 75
9.7.2.2 T0ReloadLo 75
9.7.2.3 T0CounterValHi 76
9.7.2.4 T0CounterValLo 76
9.7.2.5 T1Control 76
9.7.2.6 T1ReloadHi 77
9.7.2.7 T1ReloadLo 77
9.7.2.8 T1CounterValHi 78
9.7.2.9 T1CounterValLo 78
9.7.2.10 T2Control 78
9.7.2.11 T2ReloadHi 79
9.7.2.12 T2ReloadLo 79
9.7.2.13 T2CounterValHi 80
9.7.2.14 T2CounterValLoReg 80
9.7.2.15 T3Control 80
9.7.2.16 T3ReloadHi 81
9.7.2.17 T3ReloadLo 81
9.7.2.18 T3CounterValHi 82
9.7.2.19 T3CounterValLo 82
9.7.2.20 T4Control 82
9.7.2.21 T4ReloadHi 83
9.7.2.22 T4ReloadLo 83
9.7.2.23 T4CounterValHi 84
9.7.2.24 T4CounterValLo 84
9.8 Transmitter configuration registers. 84
9.8.1 TxMode 84
9.8.2 TxAmp 85
9.8.3 TxCon 85
9.8.4 TxI 86
9.9 CRC configuration registers. 86
9.9.1 TxCrcPreset 86
9.9.2 RxCrcCon 87
9.10 Transmitter configuration registers. 88
9.10.1 TxDataNum 88
9.10.2 TxDATAModWidth 89
9.10.3 TxSym10BurstLen 90
9.10.4 TxWaitCtrl 90
9.10.5 TxWaitLo 92
9.11 FrameCon 92
9.12 Receiver configuration registers 93
9.12.1 RxSofD. 93
9.12.2 RxCtrl 93
9.12.3 RxWait 94
9.12.4 RxThreshold. 94
9.12.5 Rcv. 95
9.12.6 RxAna 95
9.13 Clock configuration 96
9.13.1 SerialSpeed 96
9.13.2 LPO_Trimm 97
9.13.3 PLL_Ctrl Register. 98

continued >>

All information provided in this document is subject to legal disclaimers.

© NXP B.V. 2012. All rights reserved.

9.13.4 PLLDiv_Out 98
9.14 Low-power card detection configuration registers 99
9.14.1 LPCD_QMin 99
9.14.2 LPCD_QMax 100
9.14.3 LPCD_IMin 100
9.14.4 LPCD_Result_I 100
9.14.5 LPCD_Result_Q 101
9.15 Pin configuration 101
9.15.1 PinEn 101
9.15.2 PinOut 102
9.15.3 PinIn 102
9.15.4 SigOut 102
9.16 Transmitter configuration registers 103
9.16.1 TxBitMod 103
9.16.2 TxDataCon 104
9.16.3 TxDataMOD 104
9.16.4 TxSymFreq 105
9.16.5 TxSym0 106
9.16.6 TxSym 107
9.16.7 TxSym2 107
9.16.8 TxSym3 107
9.16.9 TxSym10Len 108
9.16.10 TxSym32Len 108
9.16.11 TxSym10BurstCtrl 108
9.16.12 TxSym10Mod Reg 109
9.16.13 TxSym32Mod 110
9.17 Receiver configuration 110
9.17.1 RxBitMod 110
9.17.2 RxEofSym 111
9.17.3 RxSyncValH 112
9.17.4 RxSyncValL 112
9.17.5 RxSyncMod 112
9.17.6 RxMod 113
9.17.7 RxCorr 113
9.17.8 FabCali 114
9.18 Version register 114
9.18.1 Version 114
10 Limiting values 115
11 Recommended operating conditions 115
12 Thermal characteristics 115
13 Characteristics 115
13.1 Timing characteristics 118
14 Application information 120
14.1 Antenna design description 120
14.1.1 EMC low pass filter 120
14.1.2 Antenna matching 121
14.1.3 Receiving circuit 121
14.1.4 Antenna coil 122
15 Package outline 123
16 Handling information 124
17 Packing information 124
18 Abbreviations 125
19 References 126
20 Revision history 127
21 Legal information 128
21.1 Data sheet status 128
21.2 Definitions 128
21.3 Disclaimers 128
21.4 Licenses 129
21.5 Trademarks 129
22 Contact information 129
23 Contents 130

Please be aware that important notices concerning this document and the product(s) described herein, have been included in section 'Legal information'.

© NXP B.V. 2012. All rights reserved.

For more information, please visit: http://www.nxp.com
For sales office addresses, please send an email to: salesaddresses@nxp.com

Date of release: 17 July 2012
171134